Plymouth



Plymouth
1969

SERVICE MANUAL

FOREWORD

This Plymouth Service Manual has been prepared with the latest service information available for use on 1969 models. Diagnosis, disassembly, repair, assembly and installation procedures coupled with complete specifications and tightening references can be found in each group. This publication is one of the most important "tools" available to the service technician. It will prove an invaluable aid in properly performing any phase of service necessary to maintain or restore the fine performance and reliability characteristics designed, engineered, and manufactured into these outstanding automobiles.

PLYMOUTH MODELS

VALIANT 100	BELVEDERE	FURY I
VALIANT SIGNET	ROAD RUNNER	FURY II
BARRACUDA	SATELLITE	FURY III
	SPORT SATELLITE	SPORT FURY
	GTX	VIP

For information relative to ordering the special service tools used and illustrated in this manual, or for additional copies of this manual, please refer to the instructions on inside back cover of this manual.

CHRYSLER CORPORATION

Chrysler Corporation reserves the right to make changes in design or to make additions to or improvements in its products without imposing any obligations upon itself to install them on its products previously manufactured.

Litho in U. S. A.

QUICK REFERENCE INDEX. To use, move either the hand or selection tool directly over the section you desire to reference. Simply click once with the mouse button and the manual will automatically jump to that section.

GROUP INDEX

- Introduction and General Specifications
- 0 Lubrication and Maintenance
- 1 Accessories
- 2 Front Suspension
- 3 Rear Axle
- 5 Brakes—Service Parking
- 6 Clutch
- 7 Cooling
- 8 Electrical
- 9 Engine
- 11 Exhaust System
- 14 Fuel System
- 16 Propeller Shaft and Universal Joints
- 17 Springs and Shock Absorbers
- 19 Steering Gear—Manual Power
- 21 Transmission—Standard Automatic
- 22 Wheels, Bearings and Tires
- 23 Body and Frame
- 24 Heaters and Air-Conditioning

Mopar

AUTHENTIC RESTORATION™ PRODUCT

VEHICLE AND ENGINE NUMBERS

VEHICLE NUMBER: The vehicle number (serial number) is located on a plate (Fig. 1) which is attached to the instrument panel between the left windshield wiper pivot and the left "A" post. It can easily be seen by looking through the windshield from the outside.

All vehicle numbers contain thirteen digits. The vehicle number is a code which tells the carline (1st digit), price class (2nd digit), body type (3rd and 4th digit), engine displacement (5th digit), model year (6th digit), assembly plant (7th digit), and vehicle sequence number (last six digits).

This vehicle number is also stamped on the engine block. On six cylinder engines it is on a pad located below the number 6 spark plug at the cylinder head joint face. On eight cylinder engines it is on a pad located just to the rear of the right engine mount on the pan rail.

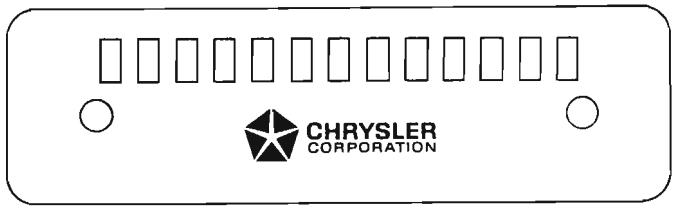

VEHICLE IDENTIFICATION NUMBER PLATE
INSTRUMENT PANEL LOCATED NR464

Fig. 1—Vehicle Identification Number Plate

1st Digit Carline	2nd Digit Price Class	3rd & 4th Digits Body Type	5th Digit Eng. Displacement Cu. In.	6th Digit Model Year	7th Digit Assembly Plant
V-Valiant	E-Economy	21-2 Dr. Sedan	A-170	9-1969	A-Lynch Road
	L-Low	23-2 Dr. Hardtop	B-225		B-Hamtramck
B-Barracuda	M-Medium	27-Convertible	C-Spec.Ord. 6		D-Belvidere
	H-High	29-2 Dr. Sport Hardtop	D-273		E-Los Angeles
R-Satellite	P-Premium	41-4 Dr. Sedan	F-318		F-Newark
116"	K-Police	43-4 Dr. Hardtop	G-383		G-St. Louis
	T-Taxi	45-2 Seat Station Wagon	H-383 H/Perf.		P-Wyoming
P-Fury	S-Special	46-3 Seat Station Wagon	J-426		(Export)
119"	O-Superstock		K-440		R-Windsor
	X-Fast Top		L-440 H/Perf.		
			M-Spec. Ord. 8		
			P-340		

ENGINE NUMBERS: All engine serial numbers contain fourteen characters and digits. The first two designate power train, the next three are the cubic inch displacement, the next one designates low compression, the next four are based on a 10,000 day calendar and the last four designate engine built that day. All 170 and 225 cubic inch engines have the serial numbers stamped on the joint face at right corner, adjacent to number 1 cylinder bore. All 273, 318 and 340 cubic inch engines have the serial numbers stamped on the front of the block just below the left cylinder head. All 383, 426 and 440 cubic inch engines have the serial numbers stamped on the cylinder block pan rail at the left rear corner below the starter opening.

On all engines, information identifying undersized crankshaft, oversized tappets, low compression, oversized cylinder bores, engine built that day, the shift and 10,000 day calendar is stamped on the cylinder block at various locations depending on engine. There can be as many as fifteen characters and digits in this location. 170 and 225 cubic inch engines are stamped on the joint face at right corner, adjacent to number 1 cylinder bore, after serial number. 273, 318 and 340 cubic inch engines are stamped on the front of the block just below the left cylinder head. 383 cubic inch engines are stamped on the right bank joint face just forward of the number 2 cylinder bore. 426 and 440 cubic inch engines are stamped on the left bank pad, adjacent to front tappet rail. For additional information on engines, see Group 9 in this manual.

BODY CODE PLATE: Includes schedule date, body type, engine code, transmission code, tire code, trim code and paint codes (Fig. 2).

It is located on the left front fender side shield or wheel housing.

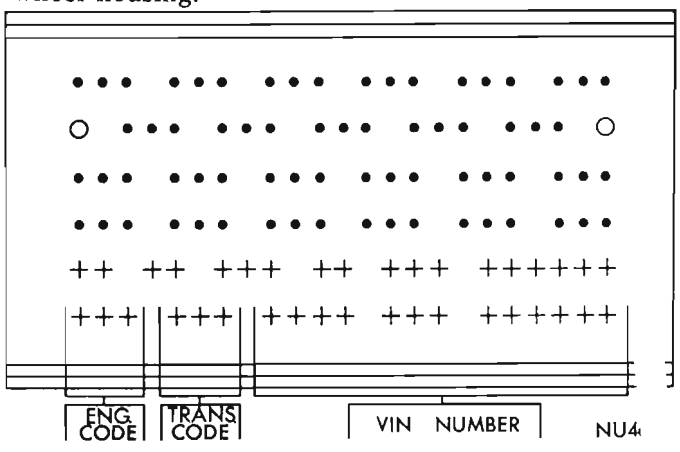

Fig. 2—Body Equipment Identification Plate

LUBRICATION AND MAINTENANCE

CONTENTS

	Page
ALTERNATOR	13
BATTERY	13
BODY MAINTENANCE	26
BRAKES	10
CAPACITIES	4
CARBURETOR AIR CLEANERS	18
CARBURETOR CHOKE VALVE SHAFT	20
CERTIFIED CAR CARE	1
CHASSIS LUBRICATION	7
CLASSIFICATION OF LUBRICANTS	1
CLUTCH LINKAGE	11
COOLING SYSTEM	12
CRANKCASE VENTILATION SYSTEM	15
DISTRIBUTORS	13
ENGINE OIL FILTERS	15
ENGINE OIL—SELECTION OF	13
ENGINE PERFORMANCE EVALUATION	18
FREQUENCY OF OIL CHANGES	14
FRONT WHEEL BEARINGS	25
FUEL FILTERS	21
HEADLIGHTS	13
HOISTING	7
HOOD LOCK, RELEASE MECHANISM AND SAFETY CATCH	26
HYDRAULIC BRAKE SYSTEM	11
LUBRICATION AND MAINTENANCE SCHEDULE	5 & 6
LUBRICATION AND MAINTENANCE SERVICES	
Normal Service	1
Trailer Towing and Severe Service	6
LUBRICATION AND MAINTENANCE CHART	
6 Cylinder Models	2
8 Cylinder Models	3
MANIFOLD HEAT CONTROL VALVES	18
MATERIALS ADDED TO ENGINE OILS	14
PARKING BRAKE MECHANISM	11
PARTS REQUIRING NO LUBRICATION	32
PROPELLER SHAFT AND UNIVERSAL JOINTS	21
REAR AXLES	9
SPEEDOMETER CABLE	26
STEERING GEAR	22
SUMMARY OF LUBRICATION AND MAINTENANCE SERVICES	1
THROTTLE LINKAGE	31
TIRES	25
TRANSMISSION (Automatic)	24
TRANSMISSION (Manual)	22
WINDSHIELD WIPER BLADES	13

CERTIFIED CAR CARE

Certified Car Care is a thorough servicing program that helps make sure the cars you sell receive the regular attention you know they need.

Certified Car Care helps build business for you in the best way known—through customer satisfaction. Inform your customers that the best approach to trouble-free driving is Certified Car Care.

This is a practical plan to help you build up sales and service volume, by providing regular service customer visits.

SUMMARY OF LUBRICATION AND MAINTENANCE SERVICES

Maintenance and lubrication service recommendations for Chrysler Corporation-built Plymouth vehicles have been compiled to provide maximum protection for the car owner's investment against all reasonable types of driving conditions.

Since these conditions vary with the individual car owner's driving habits, the area in which the car is operated and the type of service to which the car is subjected, it is necessary to prescribe lubrication and maintenance service on a time frequency as well as mileage interval basis.

Information pertaining to Lubrication and Maintenance requirements is shown on charts (Figs. 1 and 2) and on the Schedule.

Vehicles operated under conditions not classified as normal service for passenger cars, such as in trailer towing service, operation at higher than normal loading, or police or taxicab operation, require servicing at more frequent intervals. This information is included in each group under the heading "Trailer Towing Package and Severe Service".

CLASSIFICATION OF LUBRICANTS

Oils, lubricants and greases are classified and graded according to standards recommended by the Society of Automotive Engineers (SAE), the American Petroleum Institute (API) and the National Lubricating Grease Institute (NLGI).

Engine Oil

The SAE grade number indicates the viscosity of engine oils, for example, SAE 30, which is a single

LUBRICATION AND MAINTENANCE CHART

NORMAL SERVICE

VALIANT, BARRACUDA
SATELLITE and FURY
6 CYLINDER MODELS

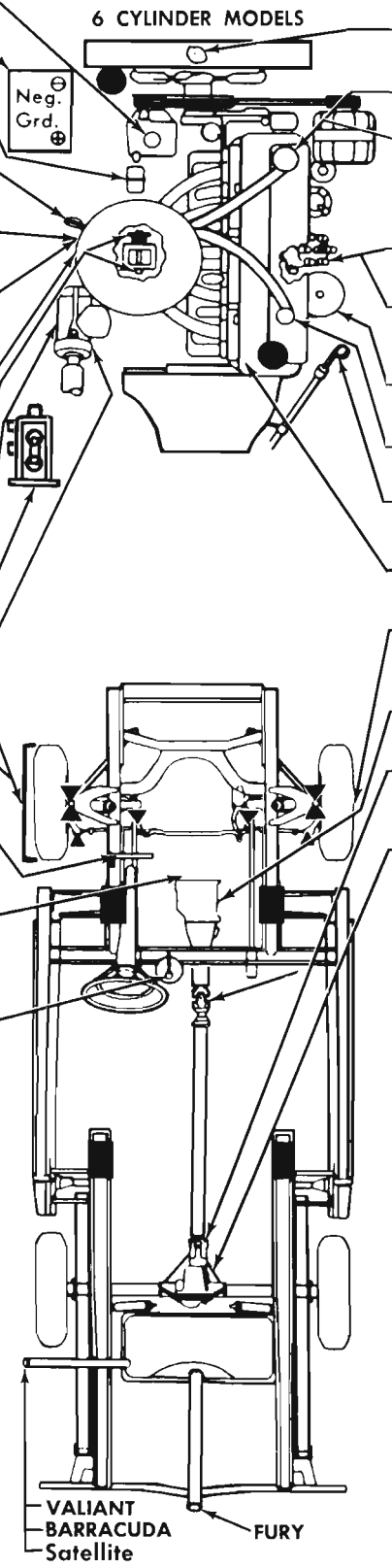

Power Steering Pump — PSF
(3) Check fluid level every oil change.

Battery
(2) Check electrolyte level.

Fuel Filter
(24) Replace.

Engine Oil Dipstick — EO
(S) Check level at refueling.

Carburetor Air Cleaner (Dry)
(6) Clean filter element.
(24) Replace filter element.

Carburetor Air Cleaner (Oil Bath) — EO
(S) Check sediment level every 2nd oil change.
(12) Clean, reoil every 12 months.

Carburetor Choke Shaft and Cam — CC
(6) Apply solvent.

Manifold Heat Control Valve — S
(3) Apply solvent to shaft ends every oil change.

Manual Steering Gear — MP or SGL
(6) Check lubricant level.

Brake Master Cylinder — HTF
(6) Check fluid level.

Column Mounted Transmission Gearshift Controls — MPG (2-EP) or MML
(S) Lubricate contact surfaces, as required.

Front Suspension Ball Joints — MML
Steering Linkage Ball Joints — MML
(6) Inspect seals for leakage.
(36) Relubricate.

Clutch Torque Shaft Bearings MPG (2-EP) or MML
(36) Remove and lubricate. Refer to procedure.

Clutch Drive Lugs, Bearing Sleeve, Fork and Pivot — MML
(S) Lubricate contact surfaces, as required. Refer to procedure.

Floor-Mounted Transmission Gearshift Controls — EO
(S) Apply light engine oil to contact mechanism, as required.

Engine Coolant
(2) Check level and/or anti-freeze.

Oil Filler Cap — EO
(6) Clean and reoil.

Crankcase — EO
(3) Drain and refill.
See Viscosity Recommendations.

Distributor Cam and Rubbing Block — DCL
(S) Lubricate when servicing contacts.

Distributor Rotor Felt Wick — EO
(S) Apply 1 drop when servicing contacts.

Engine Oil Filter
(S) Replace every 2nd oil change.

Crankcase Ventilation System
(6) Inspect and service. Refer to procedure.

Automatic Transmission — AA
(6) Check fluid level.

Engine Performance Evaluation
(12) Evaluate performance.

Front Brake Assemblies and Wheel Bearings — MPG (2-EP) or MML
(12) Inspect linings, bearings and lubricant.

Manual Transmission — AA or MP
(6) Check fluid level.

Universal Joints — MPG (2-EP) or MML
(6) Inspect seals for leakage. Refer to procedure.

Rear Axles — GL or HL
(6) Check fluid level.

Body Mechanisms — See Body Maintenance.
(S)

CAPACITIES See Capacities Chart.

TIRE PRESSURES

Shown on decal on body pillar, leftside. See "Tires," Group 22 for additional information.

FREQUENCY SYMBOLS

(2)	2 Months
(3)	3 Months or 4,000 Miles
(6)	6 Months
(12)	12 Months or 12,000 Miles
(24)	24 Months or 24,000 Miles
(36)	36 Months or 36,000 Miles
(S)	As specified.

■ Position for lift adapter
▲ Prepacked bearing
● Cooling system drain

	KEY TO LUBRICANTS	Part No.*
AA	Automatic Transmission Fluid, AQ-ATF, Suffix "A"	1843314
CC	Carburetor Cleaner	2933500
DCL	Cam Lubricant	1473595
EO	Engine Oil	
GL	Gear Lubricant (Drum) (All standard Axles)	2585317
HL	Hypoid Lubricant (Qt.) (Sure-Grip 7 ¼", 8 ¾" and Standard axles)*	2933565
HTF	High Temperature Brake Fluid	2421352
MML	Multi-Mileage Lubricant	2525035
MP	Multi-Purpose Gear Lubricant	
MPG (2-EP)	Multi-Purpose Grease, NLGI Grade 2 EP	
PSF	Power Steering Fluid	2084329
S	Manifold Heat Control Valve Solvent	2525054

*See Alternate Specifications In Individual Paragraphs.

NR231A

Fig. 1—Lubrication Chart

LUBRICATION AND MAINTENANCE CHART

NORMAL SERVICE
VALIANT, BARRACUDA
SATELLITE and FURY
8-CYLINDER MODELS

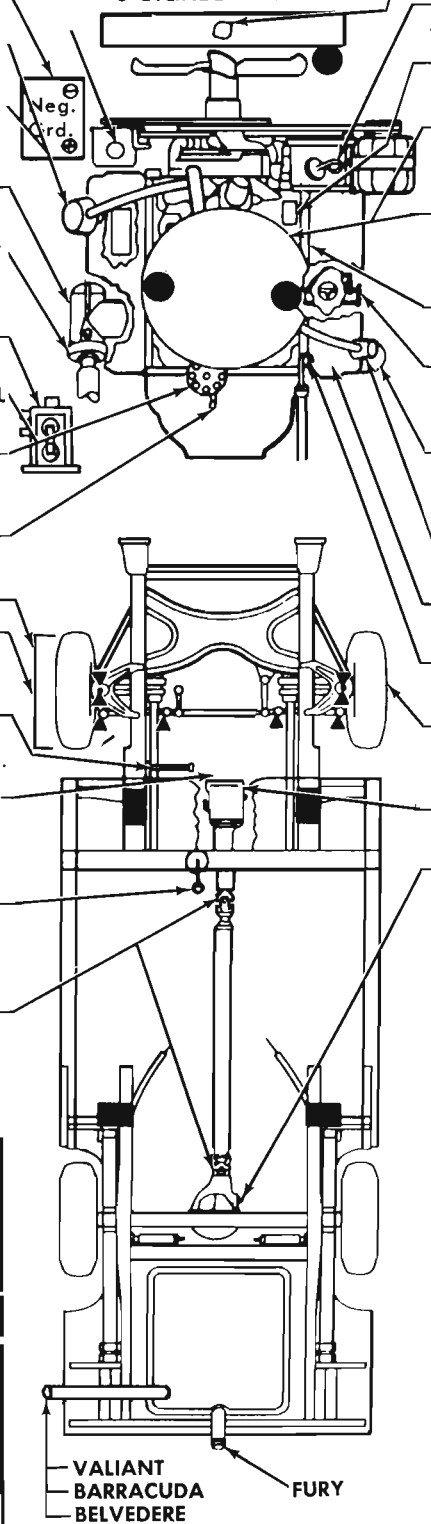

Power Steering Pump — PSF
(3) Check fluid level every oil change.

Battery
(2) Check electrolyte level.

Oil Filler Cap — EO
(6) Clean and reoil.

Crankcase — EO
(3) Drain and refill.*
See Viscosity Recommendations.

Manual Steering Gear — MP or SGL
(6) Check lubricant level.

Column Mounted Transmission Gearshift Controls — MPG (2-EP) or MML
(S) Lubricate contact surfaces, as required.

Brake Master Cylinder — HTF
(6) Check fluid level.

Distributor Cam and Rubbing Block — DCL
(S) Lubricate when servicing contacts.

Distributor Rotor Felt Wick — EO
(S) Apply 1 drop when servicing contacts.

Distributor Oil Cup — EO
(6) Apply 3 to 5 drops in cup.

Front Suspension Ball Joints — MML
Steering Linkage Ball Joints — MML
(6) Inspect seals for leakage.
(36) Relubricate.

Clutch Torque Shaft Bearings MPG (2-EP) or MML
(36) Remove and lubricate. Refer to procedure.

Clutch Drive Lugs, Bearing Sleeve, Fork and Pivot — MML
(S) Lubricate contact surfaces, as required. Refer to procedure.

Floor-Mounted Transmission Gearshift Controls — EO
(S) Apply light engine oil to contact mechanism, as required.

Universal Joints — MPG (2-EP) or MML
(6) Inspect seals for leakage. Refer to procedure.

*For 426 Hemi Engine, See Lubrication Group.

Engine Coolant
(2) Check level and/or anti-freeze.

Engine Oil Dipstick — EO
(S) Check level at refueling.

Fuel Filter
(24) Replace.

Carburetor Air Cleaner (Dry)**
(6) Clean filter element.
(24) Replace filter element.

Carburetor Air Cleaner (Oil Bath) — EO
(S) Check sediment level every 2nd oil change.
(12) Clean every 12 months.

Carburetor Choke Shaft and Cam — CC
(6) Apply solvent.

Manifold Heat Control Valve — S
(3) Apply solvent to shaft ends every oil change.

Engine Oil Filter
(S) Replace every 2nd oil change.

Crankcase Ventilation System
(6) Inspect and service. Refer to procedure.

Engine Performance Evaluation
(12) Evaluate performance.

Automatic Transmission — AA
(6) Check fluid level.

Front Brake Assemblies and Wheel Bearings — MPG (2-EP) or MML
(12) Inspect linings, bearings and lubricant.

Manual Transmission — AA or MP
(6) Check fluid level.

Rear Axles — GL, HL or MP/SGL
(6) Check fluid level.

Body Mechanisms — See Body Maintenance.
(S)

■ Position for lift adapter
▲ Prepacked bearing
● Cooling system drain

**Fresh Air Induction System
Clean filter element every oil change.
Replace element every 12 months.

TIRE PRESSURES

Shown on decal on body pillar, leftside. See "Tires," Group 22 for additional information.

CAPACITIES See Capacities Chart.

FREQUENCY SYMBOLS

(2)	2 Months
(3)	3 Months or 4,000 Miles
(6)	6 Months
(12)	12 Months or 12,000 Miles
(24)	24 Months or 24,000 Miles
(36)	36 Months or 36,000 Miles
(S)	As specified.

	KEY TO LUBRICANTS	Part No.*
AA	Automatic Transmission Fluid, AQ-ATF, Suffix "A"	1843314
CC	Carburetor Cleaner	2933500
DCL	Cam Lubricant	1473595
EO	Engine Oil	
GL	Gear Lubricant (Drum) (All standard Axles)	2585317
HL	Hypoid Lubricant (Qt.) (Sure-Grip 7 ¼", 8 ¾" and Standard axles)*	2933565
SGL	Sure-Grip Lubricant (9 ¼" and 9 ¾" Sure-Grip)	2585318
HTF	High Temperature Brake Fluid	2421352
MML	Multi-Mileage Lubricant	2525035
MP	Multi-Purpose Gear Lubricant	
MPG (2-EP)	Multi-Purpose Grease, NLGI Grade 2 EP	
PSF	Power Steering Fluid	2084329
S	Manifold Heat Control Valve Solvent	2525054

*See Alternate Specifications In Individual Paragraphs.

NR232A

Fig. 2—Lubrication Chart

CAPACITIES

	U.S. Measure	Imperial Measure
Crankcase		
All Engines except Hemi 426 Engine	4 qts.	3-1/4 qts.
Hemi 426 Engine	6 qts.	5 qts.
Add 1 quart (3/4 Imp. quart) when filter is replaced.		
Cooling System		
Valiant (170 Cu. In. Engine)	12 qts.**	10 qts.**
Valiant, Barracuda, Satellite (225 Cu. In. Engine)	13 qts.**	10-3/4 qts.**
Satellite (Police, Taxi 225 Cu. In. Engine)	13 qts.**	10-3/4 qts.**
Fury (225 Cu. In. Engine)	13 qts.	10-3/4 qts.
Valiant (273 Cu. In. Engine)	17 qts.**	14-1/4 qts.**
Valiant, Barracuda (318 Cu. In. Engine)	16 qts.**	13-1/4 qts.**
Fury, Satellite (318 Cu. In. Engine)	16 qts.***	13-1/4 qts.***
Fury (Police, Taxi 318 Cu. In. Engine)	16 qts.***	13-1/4 qts.***
Fury (Police, Taxi 318 Cu. In. Engine and A-727 Trans.)	18 qts.	15 qts.
Satellite (Police 318 Cu. In. Engine)	19 qts.	15-3/4 qts.
Barracuda (340, 383 Cu. In. Engine)	16 qts.	13-1/4 qts.
Fury, Satellite (2 or 4 BBL 383 Cu. In. Engine)	16 qts.*	13-1/4 qts.*
Satellite (Police 2 or 4 BBL 383 Cu. In. Engine)	17 qts.	14-1/4 qts.
Fury (Police 2 or 4 BBL 383, 440 Cu. In. Engine)	17 qts.	14-1/4 qts.
Fury (440 Cu. In. Engine)	17 qts.*	14-1/4 qts.*
Fury, Satellite (440 Cu. In. HP Engine)	17 qts.*	14-1/4 qts.*
Satellite (426 Cu. In. Engine)	18 qts.	15 qts.
Rear Axle		
7-1/4" Axle	2 pts.	1-3/4 pts.
8-3/4" Axle	4 pts.	3-1/4 pts.
9-1/4" Axle	4 pts.	3-1/4 pts.
9-3/4" Axle	5-1/2 pts.	4-1/2 pts.
Transmission (TorqueFlite)		
170, 225, 273 and 318 with 904 Transmission†	15-1/2 pts.	13 pts.
340 and 383 4 BBL Cu. In. Engines (Barracuda only)	15-1/2 pts.	13 pts.
225 Police or Taxi, 318 Cu. In. Engine with 727 Transmission, 383 2 BBL and 440 Cu. In. Engines	18-1/2 pts.	15-1/2 pts.
426 Cu. In. Engine	16 pts.	13-1/4 pts.
383 4 BBL Cu. In. Engine with Auxiliary Cooler	16-1/2 pts.	13-3/4 pts.
383 4 BBL. Cu. In. Engines	15-1/2 pts.	13 pts.
Transmission 3 Speed (Manual)		
Model A-903 6 Cyl.	6-1/2 pts.	5-1/2 pts.
Model A-745 8 Cyl. (6 Cyl. Police and Taxi)	6 pts.	5 pts.
Transmission 4 Speed (Manual)		
Model A-833 Valiant and Barracuda	7 pts.	5-3/4 pts.
Satellite	7-1/2 pts.	6-1/4 pts.
Fury	7-3/4 pts.	6-1/2 pts.
Fuel Tank		
Valiant, Barracuda	18 gals.	15 gals.
Satellite	19 gals.	15-3/4 gals.
Fury (except Station Wagon)	24 gals.	20-1/2 gals.
Fury Station Wagon	22 gals.	18-1/4 gals.

For Maximum Cooling or Air Conditioning.
*Add 1 qt. (3/4 Imperial qt.)
**Add 2 qts. (1-3/4 Imperial qts.)
***Add 3 qts. (2-1/2 Imperial qts.)

†Fury models only. 318 Cu. In. Engine with A-904 TorqueFlite, Identify by part number and support webs cast on servo at right rear of case.

LUBRICATION AND MAINTENANCE SCHEDULE

SERVICE INTERNAL	ITEM	PAGE	Replace	Check Fluid Level	Inspect and/or Clean	Lubricate	Service
3 Months or 4,000 Miles, whichever occurs first	Engine Crankcase Oil	13	X				
Every Engine Oil Change	Manifold Heat Control Valve	18					X
	Power Steering Fluid	22		X			
	Carburetor Air Filter—Paper**	18			X		
Every Second Oil Change	Engine Oil Filter	15	X				
	Tire Rotation	25					X
	Carburetor Air Filter—Oil Bath	20			X		
Every 6 Months	Carburetor Air Filter—Paper	18			X		
	Crankcase Ventilation System	15			X		X
	Carburetor Choke Shaft	20			X		X
	Oil Filler Pipe Cap	18			X	X	
	Transmission	22		X			
	Rear Axle	9		X			
	Steering Gear	22		X			
	Steering Linkage	8			X		
	Suspension Ball Joints	7			X		
	Universal Joints	21			X		
	Brake Master Cylinder	10		X			
	Brake Hoses	11			X		
	Headlight Aiming	13					X
	Hood Latch and Safety Catch	26			X	X	
Every 12 Months	Cooling System	12					X
	Crankcase Ventilator Valve	16	X				
	Carburetor Air Filter—Oil Bath	20					X
	Carburetor Air Filter—Paper**	18	X				
	Throttle Linkage	31				X	
Every 12 Months or 12,000 Miles, whichever occurs first	Engine Performance Evaluation	18					X
	Brakes*	10			X		
	Front Wheel Bearing Lubricant	25			X		
Every 24 Months or 24,000 Miles, whichever occurs first	Carburetor Air Filter—Paper	18	X				
	Fuel Filter	21	X				
	Brake Pedal Linkage Bushings	11				X	X
Every 36 Months or 36,000 Miles, whichever occurs first	Front Suspension Ball Joints	7				X	
	Steering Tie Rod Ends	7				X	
	Clutch Torque Shaft Bearings	11				X	
When Necessary	Distributor	13				X	X
	Body Mechanisms	26				X	
	Clutch Release Bearing Sleeve, Fork Fingers and Pivot	12				X	
	Column-Mounted Gearshift Linkage	23				X	

*Replace linings if necessary.
**Vehicles equipped with Fresh Air Induction System

LUBRICATION AND MAINTENANCE SCHEDULE

SERVICE INTERNAL	ITEM	PAGE	Replace	Check Fluid Level	Inspect and/or Clean	Lubricate	Service
	Floor-Mounted Gearshift Controls	24				X	
	Parking Brake Mechanism	11				X	
	Speedometer Cable	26				X	
Points That Should Not Be Lubricated		32					

TRAILER TOWING PACKAGE AND SEVERE SERVICE

Every 3 Months or	Transmission			X			
4,000 Miles, which-	Rear Axle			X			
ever occurs first	Universal Joints				X		
	*Transmission Fluid		X				
After first 36 Months	*Automatic Transmission Filter		X				
or 36,000 Miles, which-	*Automatic Transmission Bands						X
ever occurs first	Rear Axle Lubricant		X				
	Universal Joints					X	
*And every 12 months or 12,000 miles thereafter							

grade oil. Engine oils are also identified by a dual number, for example, SAE 10W-30, which indicates a multigrade oil.

The API classification system defines oil performance in terms of engine usage. Only engine oils designated "For Service MS" should be used. These oils contain sufficient chemical additives to provide maximum engine protection. Both the SAE grade and the API designation must be found on the container.

Gear Lubricants

The SAE grade number also indicates the viscosity

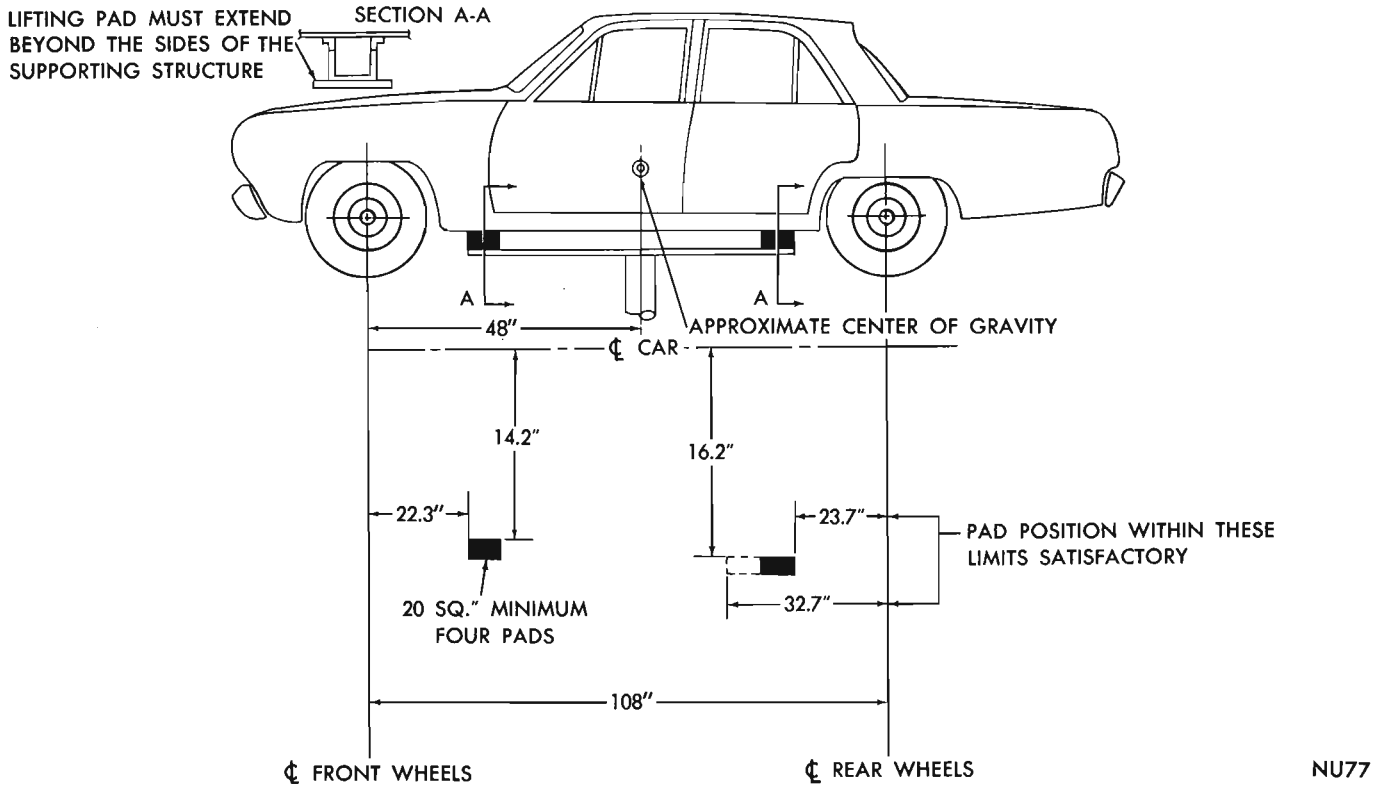

Fig. 3—Support Locations—Frame Contact Hoist (Valiant, Barracuda Models)

of Multi-Purpose Gear Lubricants, defined by MIL-L-2105B. An example is SAE 75, which is a light viscosity lubricant.

Lubricants—Greases

Semi-solid lubricants, such as specified for propeller shaft universal joints, bear the NLGI designation. They are further classified as grades "O" or "2."

HOISTING

Post Type

Special care should be taken when raising the vehicle on a frame contact type hoist. The hoist must be equipped with the proper adapters in order that the vehicle will be supported in the correct locations (Figs. 3, 4 and 5).

Conventional hydraulic hoists may be used after determining that the adapter plates will make firm contact with the lower control arms and the rear axle housing.

Floor Jack

A regular floor jack may be used under the rear axle housing, or under the front suspension lower control arms, **however, a floor jack must never be used on any parts of the underbody.**

CAUTION: Do not attempt to raise one entire side of the vehicle by placing a jack midway between a front and rear wheel. This practice may result in permanent damage to the body.

Bumper Jack

The bumpers are designed to accept a bumper jack in an emergency, if it becomes necessary to change a tire on the road. Notches are provided in the bumpers for the purpose of raising the vehicle with the bumper jack.

CHASSIS LUBRICATION

Front Suspension Ball Joints

The front suspension ball joints (Figs. 6, 7 and 8) are semi-permanently lubricated with a special lubricant at the factory.

The ball joints should be inspected every six months, or whenever vehicle is serviced for other reasons, for damage to the seals which can result in loss or contamination of lubricant. Clean accumulated dirt and lubricant from outside surface of seals to permit thorough inspection. Replace damaged seals or joints immediately to prevent contamination of lubricant or damage to parts. Lubricate ball joints, if necessary.

BALL JOINTS ARE DESIGNED TO OPERATE WITH SOME FREE PLAY. REPLACEMENT SHOULD BE MADE ONLY WHEN FREE PLAY EXCEEDS THE SPECIFICATIONS SHOWN IN **"FRONT SUSPENSION", Group 2.**

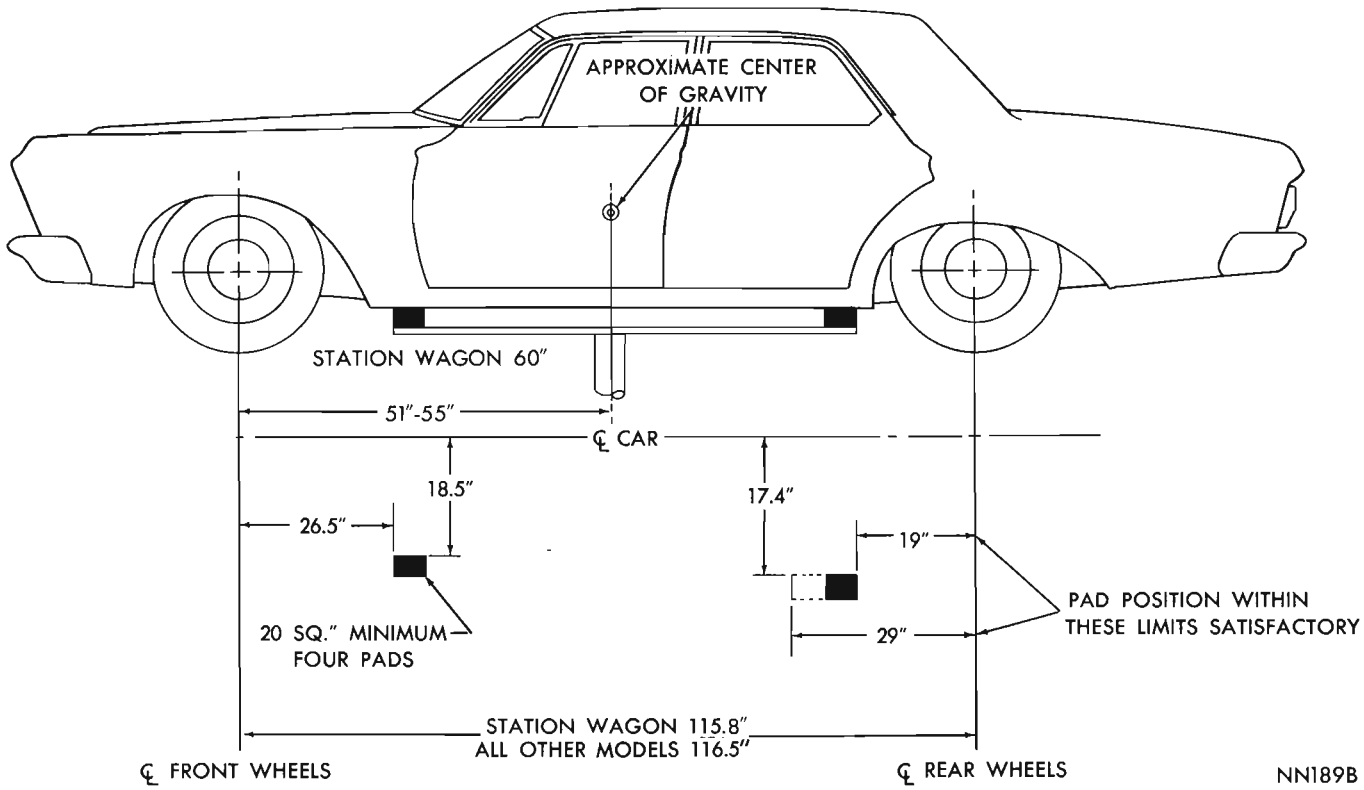

Fig. 4—Support Locations—Frame Contact Hoist (Satellite Models)

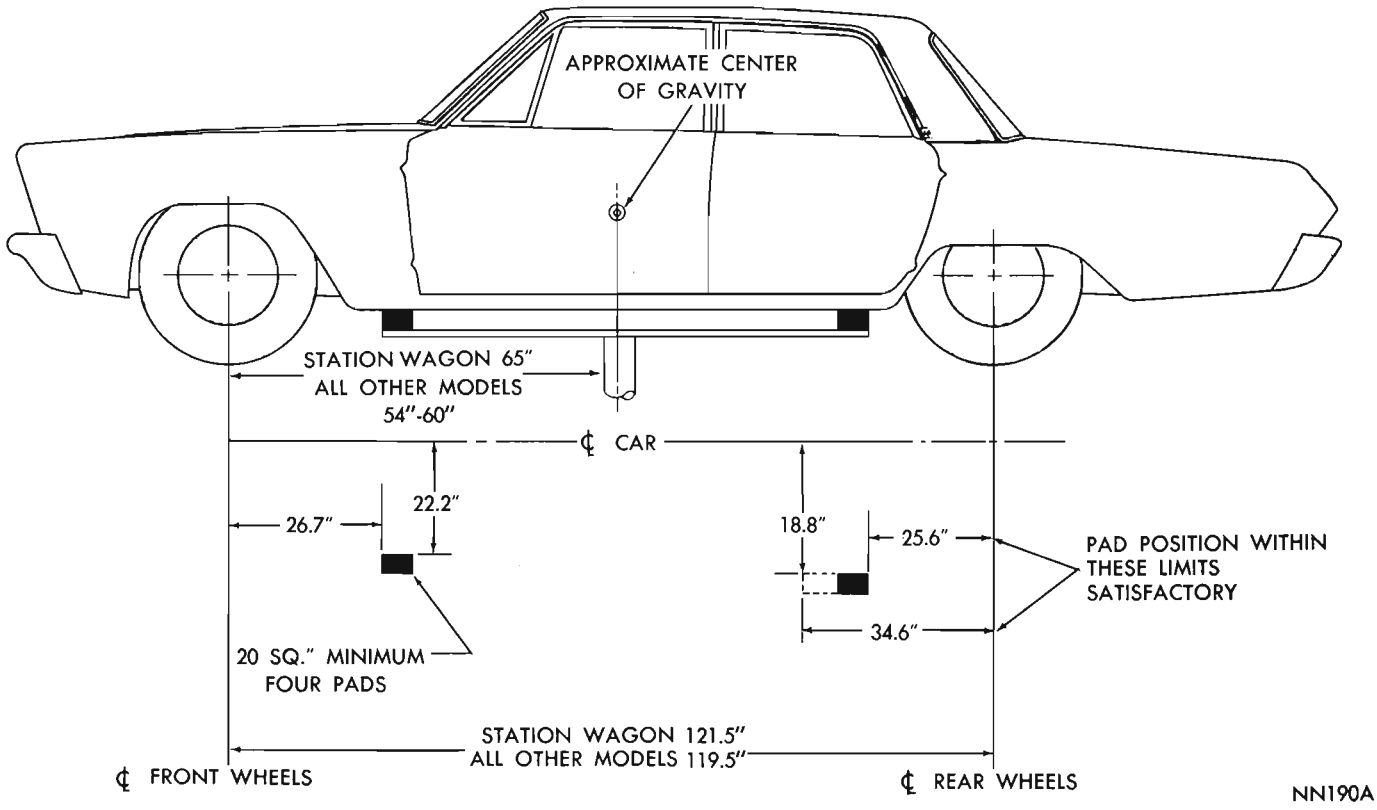

Fig. 5—Support Locations—Frame Contact Hoist (Fury Models)

Relubrication is required every 36 months or 36,000 miles, whichever occurs first.

When lubricating control arm ball joints, use only the special long-life chassis greases such as Multi-Mileage Lubricant, Part Number 2525035, intended for this purpose. Remove threaded plug from each ball joint and **temporarily** install lubrication fittings. Inject lubricant until it flows freely from seal bleed areas at base of seal. Stop when seal begins to balloon. Remove fittings and reinstall threaded plugs.

CAUTION: If high pressure lubrication equipment is used, stop filling when lubricant begins to flow freely from bleed area at base or at top of seal, or if seal begins to balloon.

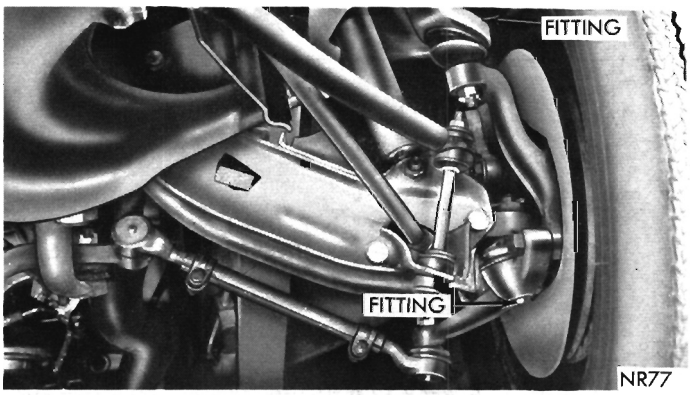

Fig. 6—Upper and Lower Ball Joint Lubrication (Valiant and Barracuda Models)

Steering Linkage Ball Joints

The four tie rod end ball joints and the steering gear arm ball joint (Figs. 9, 10 or 11) are semi-permanently lubricated with a special lubricant at the factory.

The ball joints should be inspected every six months, or whenever vehicle is serviced for other reasons, for damage to seals which can result in loss of lubricant. Clean accumulated dirt and lubricant

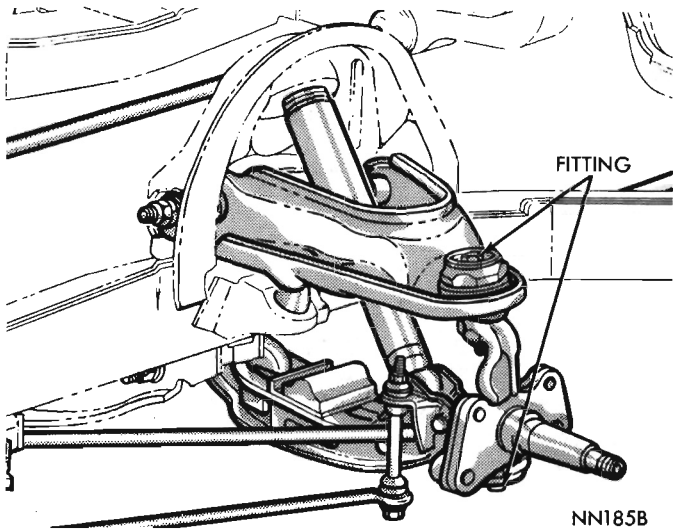

Fig. 7—Upper and Lower Ball Joint Lubrication (Satellite Models)

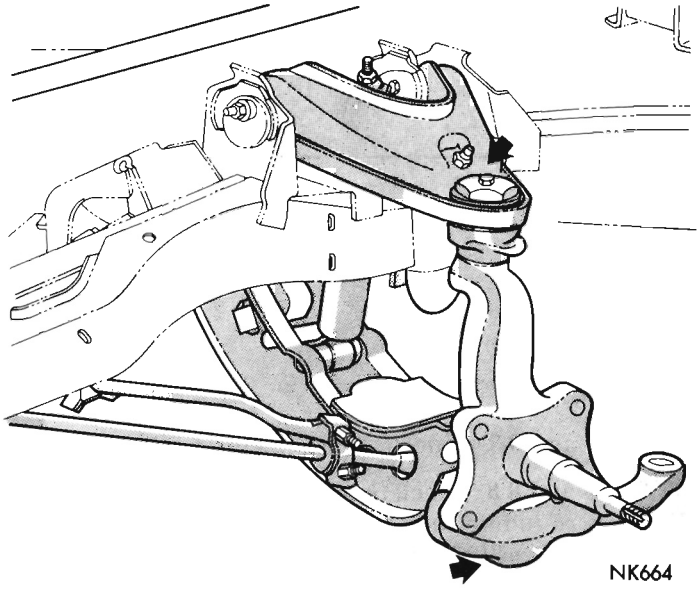

Fig. 8—Upper and Lower Ball Joint Lubrication (Fury Models)

from outside surfaces of seals to permit thorough inspection.

Replace damaged seals or joints immediately to prevent contamination of lubricant or failure of parts. Lubricate ball joints, if necessary.

Relubrication of tie rod ball joints is required every 36 months or 36,000 miles, whichever occurs first.

When lubricating steering linkage ball joints, use only the special long-life chassis greases such as Multi-Mileage Lubricant, Part Number 2525035, intended for this purpose. Remove threaded plug from each ball joint and **temporarily** install lubrication fittings. Inject lubricant until it flows freely from seal bleed area at top or base of seal. Stop when seal begins to balloon. Remove fittings and reinstall threaded plugs.

CAUTION: High pressure lubrication equipment may be used if time is allowed for grease to bleed from seal base.

REAR AXLE

Standard and Sure-Grip

The lubricant installed in the rear axle at time of assembly is a high quality product and regularly scheduled changes of the lubricant are not recommended in vehicles where operation is classified as normal passenger car service.

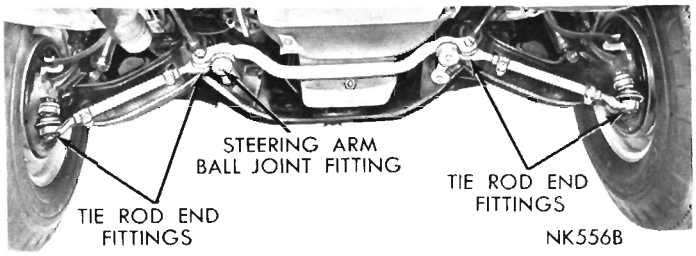

Fig. 9—Steering Linkage Lubrication (Valiant and Barracuda Models)

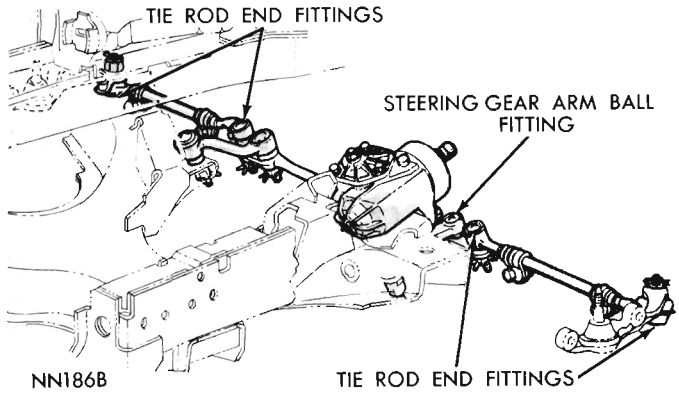

Fig. 10—Steering Linkage Lubrication (Satellite Models)

The only exceptions, however, would be where the lubricant has become contaminated with water, or in the case of the **standard** rear axle, to provide the correct viscosity grade for the anticipated temperature range, as indicated by the accompanying table:

The factory fill lubricant is satisfactory to —30°F. ambients.

Anticipated Temperature Range		Viscosity Grade
Above	—10°F.	SAE 90
As low as	—30°F.	SAE 80
Below	—30°F.	SAE 75

If necessary to change lubricant in 7-1/4 or 8-3/4 inch axle remove old lubricant with suction pump through filler plug hole (Figs. 12 and 13).

For 9-1/4 or 9-3/4 inch axle remove the drain plug from the bottom of the axle housing (Fig. 14).

Fluid capacities are shown on page 4.

Every six months check the fluid level in the axle through the filler plug hole. When checking the level, be sure the vehicle is in a level position, on an axle or drive-on type hoist. Identify axle and fluid level as indicated in the accompanying chart.

Multipurpose Gear Lubricant, as defined by MIL-L-

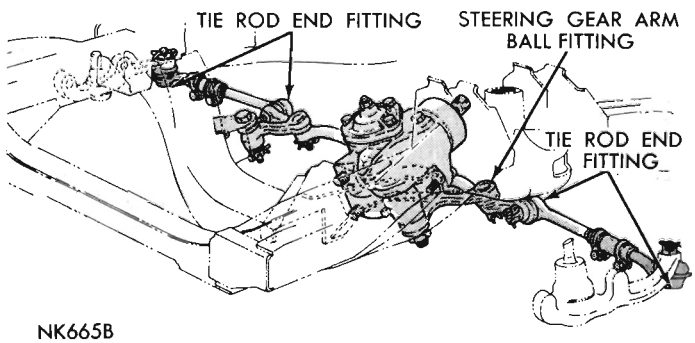

Fig. 11—Steering Linkage Lubrication (Fury Models)

AXLE IDENTIFICATION CHART

Axle Size	Filler Location	Cover Fastening	Capacity Pints	Lubricant Level Between Bottom of Filler Hole
7-1/4	Cover	9 Bolts	2.0	To 5/8 inch below
8-3/4	Carrier-Right Side	Welded	4.0	To 1/2 inch below
*9-1/4	Cover	10 Bolts	4.0	To 1/2 inch below
**9-3/4	Cover	10 Bolts	5.5	To 1/2 inch below

*Used only with 440 cubic inch engine, and 4 speed manual transmission.
**Used only with 426 cubic inch engine, and 4 speed manual transmission.

2105-B should be used in all rear axles with conventional differentials; Chrysler Gear Lubricant part number 2585317, and Chrysler Hypoid Lubricant part number 2933565 are oils of this type, and are recommended.

In Sure-Grip axles, use only the special Multipurpose lubricants intended for use in Limited Slip Differentials. Such Lubricants are available under the part numbers shown below for the axles indicated.

Chrysler Hypoid Lubricant, part number 2933565 for 7-1/4 and 8-3/4 inch Sure-Grip Differentials.*

Special Sure-Grip Lubricant, part number 2585318 for 9-1/4 and 9-3/4 inch Sure-Grip Differentials.

*7-1/4 and 8-3/4 inch Sure-Grip differentials identified by a round or rectangular shaped tag on the axle carrier stating "Use Limited Slip Lubricant Only" **require** Special Sure-Grip lubricant, part number 2585318.

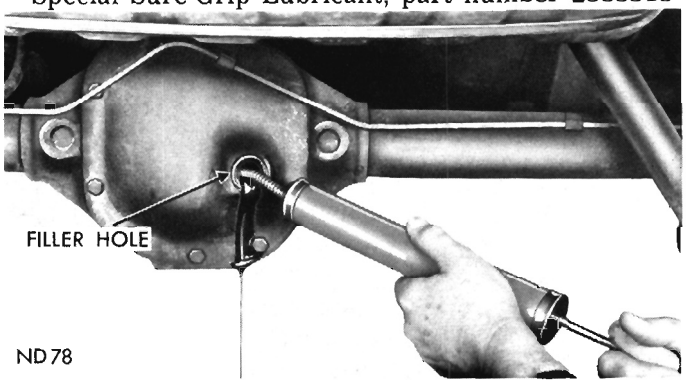

Fig. 12—Removing Rear Axle Lubricant (Valiant and Barracuda Models—7-1/4 Inch Axle)

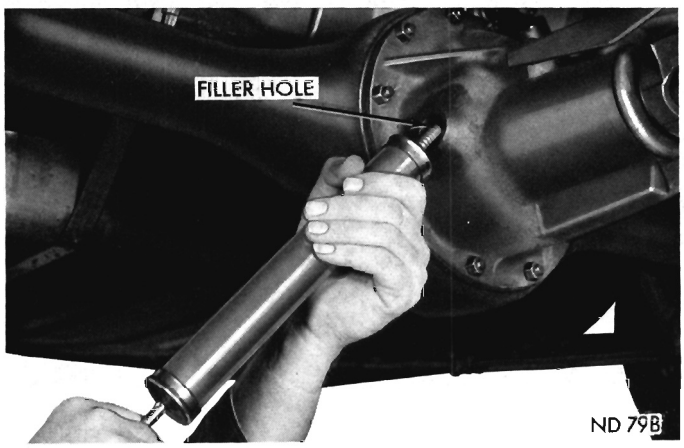

Fig. 13—Removing Rear Axle Lubricant (All Models with 8-3/4 Inch Axle)

Trailer Towing Service

For vehicles equipped for trailer towing service, the axle fluid level should be checked every 3 months or 4,000 miles, whichever occurs first. The lubricant should be drained and axle refilled with the specified lubricant, every 36 months or 36,000 miles, whichever occurs first.

If the axle is submerged in water, such as on a boat launching ramp where water can enter the axle vent, and contamination is suspected or evident, replace the lubricant immediately to avoid early axle failure.

BRAKES

The brakes on all models equipped with drum brakes, except police cars, taxicabs, vehicles equipped with high-performance engines and trailer towing package, are equipped with a self-adjusting mechan-

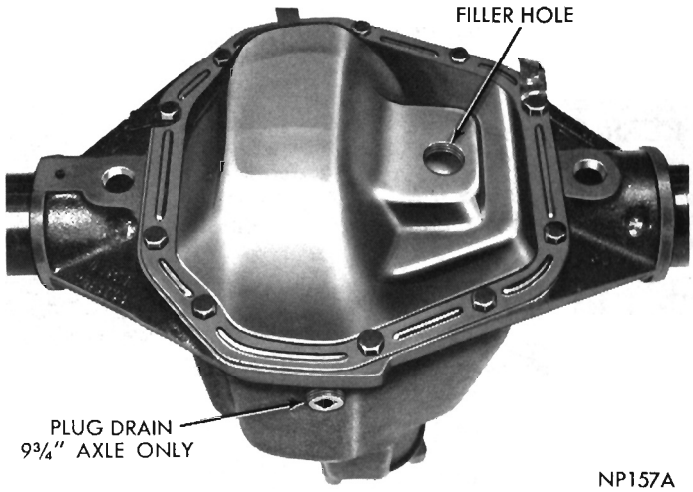

Fig. 14—Drain and Filler Plug Locations (Satellite and Fury Models with 9-1/4 and 9-3/4 Inch Axles)

ism which makes it unnecessary to perform major brake adjustments.

Inspect brake linings for wear every 12 months or 12,000 miles, whichever occurs first. Replace linings if necessary. At this time, lubricate contact areas of brake shoe supports, on models with drum brakes, with a very thin film of high-temperature, lubricant such as Chrysler Support Plate Lubricant available under Part Number 2932524.

To perform this service, first remove the brake shoes. Next, clean the contact surfaces on the shoes and supports by sanding lightly with fine sandpaper. Then, carefully apply lubricant.

On models equipped with disc brakes, inspect the discs, calipers and linings every 12 months or 12,000 miles, whichever occurs first, as outlined under "Brakes," Group 5.

HYDRAULIC BRAKE SYSTEM

Every six months, check fluid level in both reservoirs of master cylinder by removing screw, clamp and cover, or bail and cover, depending upon method of securing cover (Fig. 15). Level should be within one-quarter inch of top of reservoir. Avoid damaging cover gasket.

CAUTION: Before removing master cylinder cover, wipe it clean to prevent dirt and other foreign matter from dropping into reservoir.

If fluid is below prescribed level, replenish with Heavy Duty Hydraulic Brake Fluid, conforming to SAE 70R3, for best brake performance and greater safety. Such a fluid, Hi-Temp Brake Fluid, is available under Part Number 2421352.

Brake Hoses

Inspect brake hoses for cracking, abrasions, cuts or tears in outer covering. Examine all connections for fluid leakage and correct, or replace, where necessary.

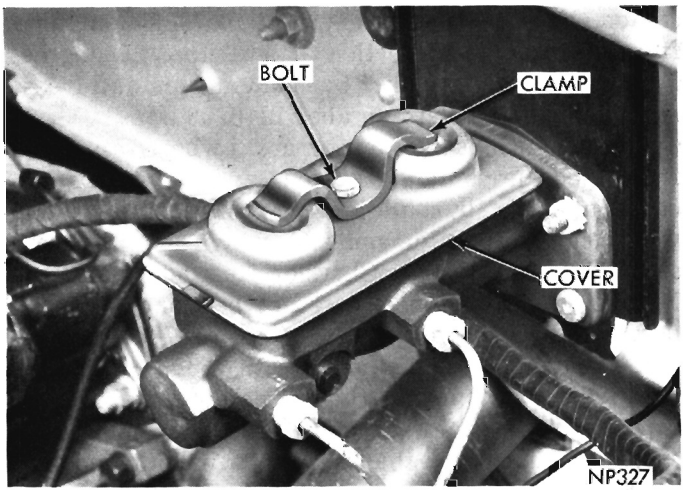

Fig. 15—Brake Master Cylinder

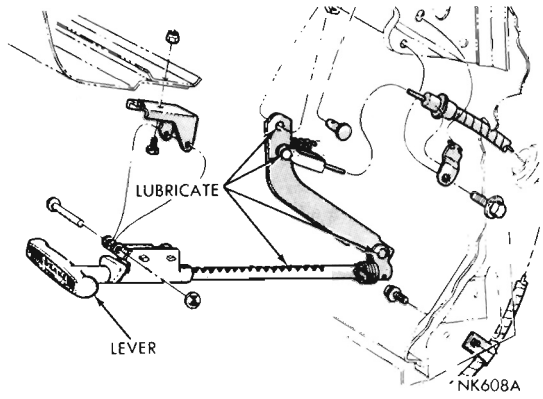

Fig. 16—Hand Operated Parking Brake Lubrication (Valiant and Barracuda Models)

PARKING BRAKE MECHANISM

Valiant and Barracuda models use a hand-operated parking brake lever (Fig. 16). Satellite and Fury Models use a foot-operated lever (Figs. 17 and 18).

Pivot points indicated should be lubricated, as required, to maintain ease of operation. Apply a film of smooth, white body hardware lubricant conforming to NLGI grade 1. Lubriplate, Part Number 1064768, is a type of lubricant recommended for this purpose.

When the hand lever can be pulled out more than four inches, or the foot pedal depressed more than four and one half inches, the brake cable should be adjusted. To adjust, refer to "Parking Brake," Group 5.

CLUTCH LINKAGE

Clutch Torque Shaft Bearings

Inspect clutch torque shaft bearings (Fig. 19) for wear and relubricate every 36 months or 36,000 miles, whichever occurs first. To perform this service, refer to "Clutch," Group 6. After removing torque shaft

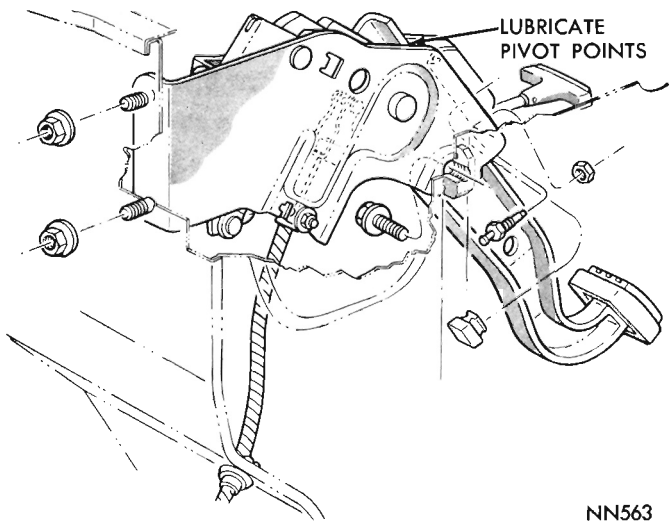

Fig. 17—Foot-Operated Parking Brake Lubrication (Satellite Models)

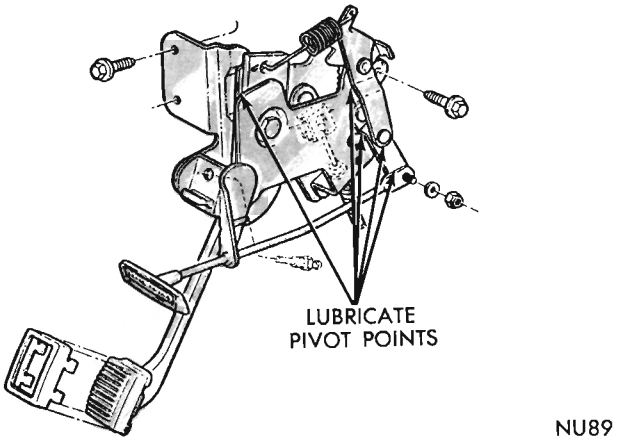

Fig. 18—Foot-Operated Parking Brake Lubrication (Fury Models)

assembly, disassemble and thoroughly clean all parts in a suitable solvent and inspect for wear. Damaged bearings and/or ball studs should be replaced.

When reassembling shaft, coat inside surfaces at ends of shaft, inside and outside surfaces of bearings and ball studs with Multi-Mileage Lubricant, Part Number 2525035, or Multi-Purpose Grease, NLGI grade 2 EP.

Clutch Drive Lugs, Release Bearing Sleeve, Release Fork and Fork Pivot

Whenever effort required to depress the clutch pedal becomes excessive, or when servicing clutch torque shaft bearings, lubricate drive lugs, sleeve, fork and pivot (Fig. 19). To gain access to this area, first remove inspection plate at bottom of clutch housing.

CAUTION: Care must be taken to avoid getting lubricant on clutch disc and/or pressure plate.

Fill cavity in sleeve with Multi-Mileage Lubricant, Part Number 2525035 or equivalent. Apply a film of same lubricant to clutch drive lugs, clutch release fork pads on sleeve, contact areas of fork fingers, pivot contact area of fork and fork pivot (Fig. 19).

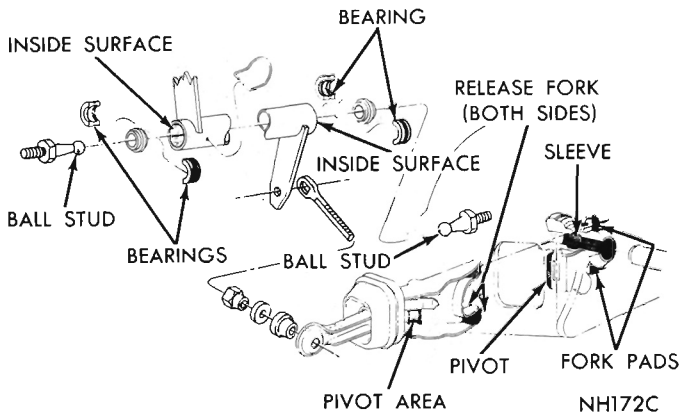

Fig. 19—Clutch Torque Shaft Bearings and Linkage Lubrication (Typical)

COOLING SYSTEM

The cooling system of all cars is protected against corrosion and freezing as they leave the factory. A permanent type anti-freeze is added to provide protection to —20°F. Higher percentages of anti-freeze must be added where temperatures below —20°F. are anticipated.

All engines, except the 170 cubic inch engine, are equipped with 190 degree thermostats. The 170 cubic inch is provided with a 200 degree thermostat and only permanent type anti-freeze should be used. Alcohol base anti-freeze products should not be used because of their low boiling points.

Inspect coolant level every two months and refill as necessary. Once a year, preferably in the fall, the cooling system should be drained and refilled. This draining and refilling procedure, however, need not be performed until the fall following the vehicle's first full year of operation. Drain V-8 engine cooling system by removing drain plugs in sides of cylinder block and opening drain cock in lower radiator tank. On 6-cylinder engines, remove the single drain plug in right side of engine and open drain cock in lower radiator tank. **Discard old solutions.**

Flush the system thoroughly with water. If there is an indication that the system contains a considerable amount of sediment, use a reliable cooling system cleaner to loosen the sediment. Rinse thoroughly to remove deposits.

At this time, check water pump belt tension and check hose connections for tightness.

In areas where protection from freezing is required, refill cooling system with clean, soft water and a suitable high quality, permanent type anti-freeze, in sufficient quantity to provide full protection for the lowest anticipated temperature, but never less than 40 percent of the cooling system capacity to ensure adequate protection against corrosion. If it becomes necessary to add coolant during the cold weather season, be sure the system contains sufficient anti-freeze to provide protection at least to —20 degrees F. A suitable high quality permanent type anti-freeze is available under Part Number 1316209.

When vehicle is operated in areas where protection from freezing is not required, and vehicle is not equipped with **air conditioning,** refill cooling system with clean, soft water and add a high quality corrosion inhibitor, such as Chrysler Rust Resistor, Part Number 2421778. This need not be done until the first yearly service.

If the vehicle is equipped with **air conditioning,** the cooling system must contain anti-freeze all year round. This is necessary because in the reheat-cycle system used on all vehicles, except Valiant and Barracuda, cold, refrigerated air passes through the heater core. Anti-freeze is necessary to prevent cool-

ant in the heater core from freezing in hot weather when the air conditioner is being used. For complete information refer to "Air Conditioning," Group 24.

ALTERNATOR

The alternator is provided with prelubricated bearings, which require no periodic lubrication.

BATTERY

Every two months, or more often in hot weather and on long trips, check fluid level of cells. Restore level to 3/8 inch above plates, using only water of a known low mineral content. **Do not overfill.**

Check specific gravity, using a reliable hydrometer, every 12 months or 12,000 miles, whichever occurs first, or more often if there is excessive use of water. Clean battery posts and cable terminals and tighten terminals. Coat connections with light mineral grease or petrolatum.

Refer to "Electrical," Group 8, for complete servicing.

DISTRIBUTORS

Two types of distributors are used. One type (with double breaker points) is provided with an oil cup. When servicing breaker points apply 3 to 5 drops of light engine oil in the cup. Distributors without the oil cup have permanent lubrication and no periodic lubrication is required.

Whenever breaker points are serviced, lubricate cam surfaces. Wipe old lubricant from cam and rubbing block (Fig. 20) and apply a thin film of Cam Lubricant, Part Number 1473595, or equivalent. At this time, apply 1 drop of light engine oil to felt wick under rotor.

CAUTION: Avoid over-oiling and applying an excessive amount of cam lubricant to prevent lubricants from spreading to breaker contacts.

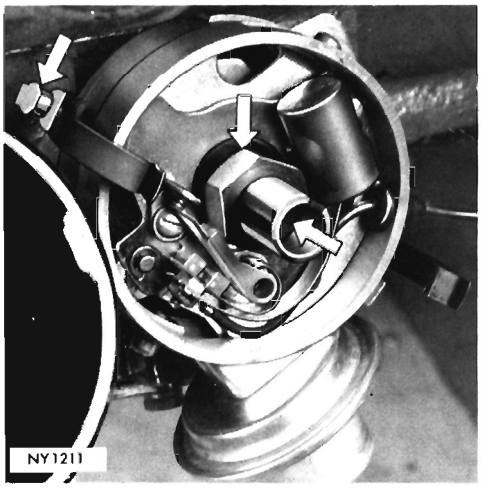

Fig. 20—Distributor Lubrication Points

HEADLIGHTS

To assure correct adjustment of headlight aiming, it is recommended that the headlights be checked and, if necessary, re-aimed properly every six months.

Changes in front and rear suspension, such as front suspension height and/or deflection of rear springs, due to heavy loading, will change the headlight beam pattern and may cause unsafe nightime driving conditions.

If a vehicle is to be loaded abnormally, such as for a vacation trip, or with a salesman's products, the headlight aiming should be checked and adjusted to serve the new conditions. Refer to "Lighting System," Group 8, for adjusting procedures.

WINDSHIELD WIPER BLADES

Long exposure to heat and road splash tend to harden rubber wiper blades, thus destroying their efficiency. When blades smear or in general do not satisfactorily clean the windshield, they should be replaced.

To replace, depress release on top of blade bridge and slide out rubber blade. Slide new rubber blade refill into bridge and lock it in place. Refer to Parts List for correct rubber blade refill.

ENGINE OIL—SELECTION OF

For best performance, and to provide for maximum protection of all engines for all types of operation, only those lubricants should be selected which:

(a) Conform to the requirements of the API classification "FOR SERVICE MS."

(b) Have the proper SAE grade number for the expected temperature range.

Oils used in our engines, labeled "For Service MS", should equal or exceed the Engine Oil Performance Rating Sequence Tests for varnish, sludge and rusting, when tested according to the methods established by the car manufacturer.

All Season Supreme and Supreme Motor Oils, available through the Parts Division, meet these requirements.

Oil Viscosity Recommendations (All engines except 426 Hemi)

Multigrades

SAE 20W-40 SAE 10W-40 or SAE 10W-30	Where temperatures are consistently above +32°F.

SAE 10W-30 or SAE 10W-40	Suitable for year long operation in many parts of the U.S.; may be used where temperatures occasionally drop as low as −10°F.
SAE 5W-30 or SAE 5W-20	Recommended where minimum temperatures are consistently below +10°F.

Single Grades

SAE 30	Where temperatures are consistently above +32°F.
SAE 10W	Where temperatures range between +32°F. and −10°F.

Oil Viscosity Recommendations (426 Hemi Engines)

Multigrades

SAE 20W-40	Where temperatures are consistently above +32°F.
SAE 10W-30 or SAE 10W-40	Where temperatures are consistently below +32°F.

Single Grades

SAE 30 or SAE 40	Where temperatures are consistently above +32°F.

Low viscosity oils make engine starting easier in cold weather. Modern SAE 5W-20 and SAE 5W-30 grade oils have been subjected to extensive engineering evaluation and may be safely used as recommended. As stated in the accompanying table, oils of the SAE 5W-20 viscosity may be used where minimum temperatures consistently fall below +10°F. during some winter months. If your region is in the shaded area (Fig. 21), SAE 5W-20 oil **should be** used during the winter months **only** in engines specified.

Lubricants which do not have both an SAE grade number and an MS Service classification on the container **should not** be used.

IMPORTANT: If a vehicle equipped with a 426 Hemi engine is to be used in competition or other forms of high performance service, use only the oil viscosity grades listed for **Summer** usage, regardless of ambient temperature. For this type of service, a more frequent oil change is also necessary to limit the effects of oil deterioration.

MATERIALS ADDED TO ENGINE OILS

It is not necessary to add any other products to engine oils for most types of driving when MS quality oils are used.

In some instances, such as infrequent operation or short trips only, and during break-in after a major overhaul, addition of special materials containing anti-rust and anti-scuff additives is beneficial. A suitable product for this purpose is available under Part Number 1879406, Engine Oil Supplement.

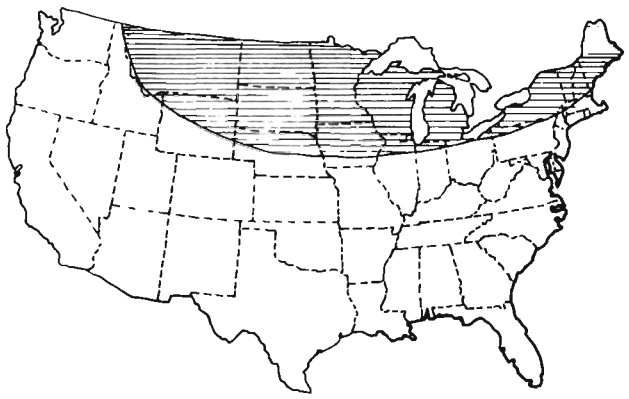

Fig. 21—Shaded Area Covers Region Where Minimum Temperatures May Be Consistently Below +10°F During Some Winter Months

FREQUENCY OF ENGINE OIL CHANGES

The by-products of combustion, such as unburned fuel, condensation and carbon deposits, in addition to dust and other abrasive materials, tend to contaminate engine oil. If permitted to remain in the crankcase for too great a period of time, the contaminants reduce the lubricating qualities of the oil causing excessive wear which can materially affect the operating efficiency of the engine.

To provide maximum protection to engine parts, it is recommended under normal operating conditions, that engine oil be drained and replenished with new oil of the proper viscosity and API classification every three (3) months or 4,000 miles, whichever occurs first.

When draining the old oil, it is recommended that the engine be at normal operating temperature, as the warmed oil will drain more readily and carry with it such foreign matter which might otherwise cling to the sides of the crankcase and the various moving parts.

A greater degree of contamination of the engine oil takes place when the vehicle is operated under adverse conditions, such as frequent driving in dusty areas, short trips, stop-and-go driving and where long periods of idling are experienced. For oil change frequencies under these operating conditions, refer to the recommendations in the paragraphs under Severe Operating Conditions and Taxi and Police Operation.

During Break-in

Cars should be driven moderately during the first 300 miles. Speeds up to 50 to 60 mph are desirable.

While cruising, brief full-throttle accelerations contribute to a good break-in. Wide-open throttle accelerations in low gear can be detrimental and should be avoided for at least 500 miles.

The oil installed in the engine at the factory is a high quality lubricant, classified "For Service MS," and **should be retained** until the first regularly scheduled three-month or 4,000-mile oil change, whichever occurs first. If it becomes necessary to add oil during this initial period, an oil with the "For Service MS" classification and of the proper viscosity grade should be used. **Nondetergent or straight mineral oils must never be used.**

Oil level should be checked during each stop for gasoline. Oil should be added only when level on oil level indicator **is at or below** "ADD OIL" mark. Frequently, a new engine will consume some oil during its first few thousand miles of operation. This should be considered as a normal part of the break-in and not interpreted as an indication of difficulty.

Severe Operating Conditions

Severe operating conditions, such as frequent driving on dusty roads, or in sandy geographic areas, or unusually short trip driving in cold weather may reasonably require oil changes more frequently than every three months. Under these conditions, consult and follow the advice of any Chrysler Motors Corporation Authorized Dealer's Service Manager.

Taxi and Police Operation

Severe service, such as taxi and city police driving, which is principally short trip operation including frequent and prolonged idling, requires oil changes more frequently on a regular schedule. For this type of service, it is recommended that engine oil be changed every two months, not to exceed 2,000 miles. Replace filter every second oil change.

ENGINE OIL FILTERS

All engines are equipped with full-flow, throw-away oil filters (Figs. 22, 23, 24 and 25) to provide efficient filtering of engine oil for maximum engine protection.

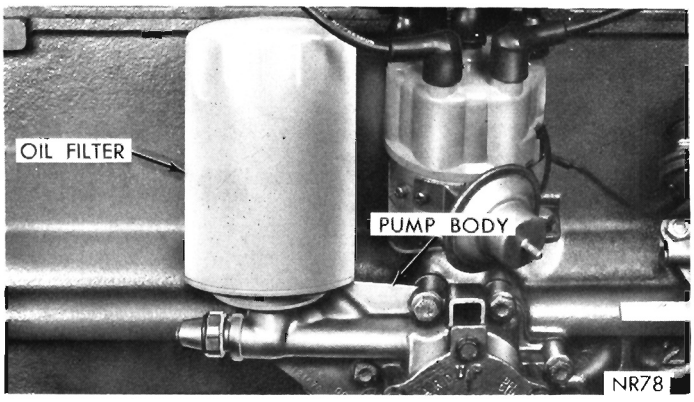

Fig. 22—Engine Oil Filter (6 Cylinder Engines)

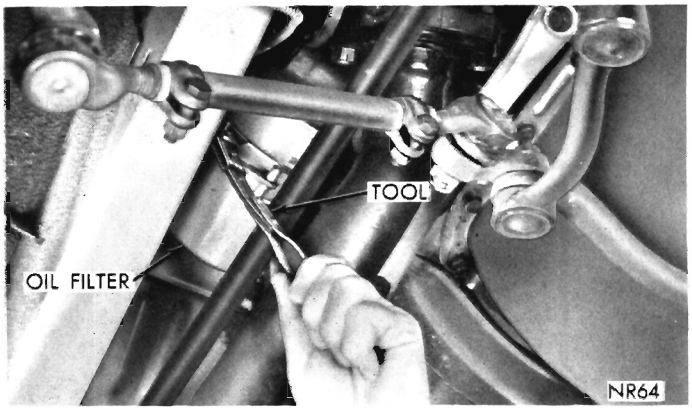

Fig. 23—Engine Oil Filter (273, 340 Cu. In. Engines)

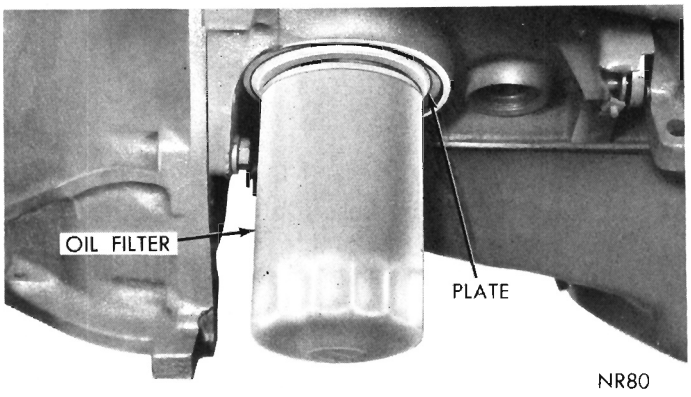

Fig. 24—Engine Oil Filter (318 Cu. In. Engine)

The filter should be replaced every second oil change. Since filters vary widely in quality, it is recommended that a Chrysler Corporation Engine Oil Filter, or equivalent, be used for replacement to assure most efficient service.

CRANKCASE VENTILATION SYSTEM

All models are equipped with a fully closed crankcase ventilation system (Fig. 26). This system has a closed oil filler cap with a hose connecting the filler cap to the carburetor air cleaner housing. This provides the air inlet for the system.

The air drawn from the carburetor air cleaner



Fig. 25—Removing Engine Oil Filter (383, 440 Cu. In. Engines)

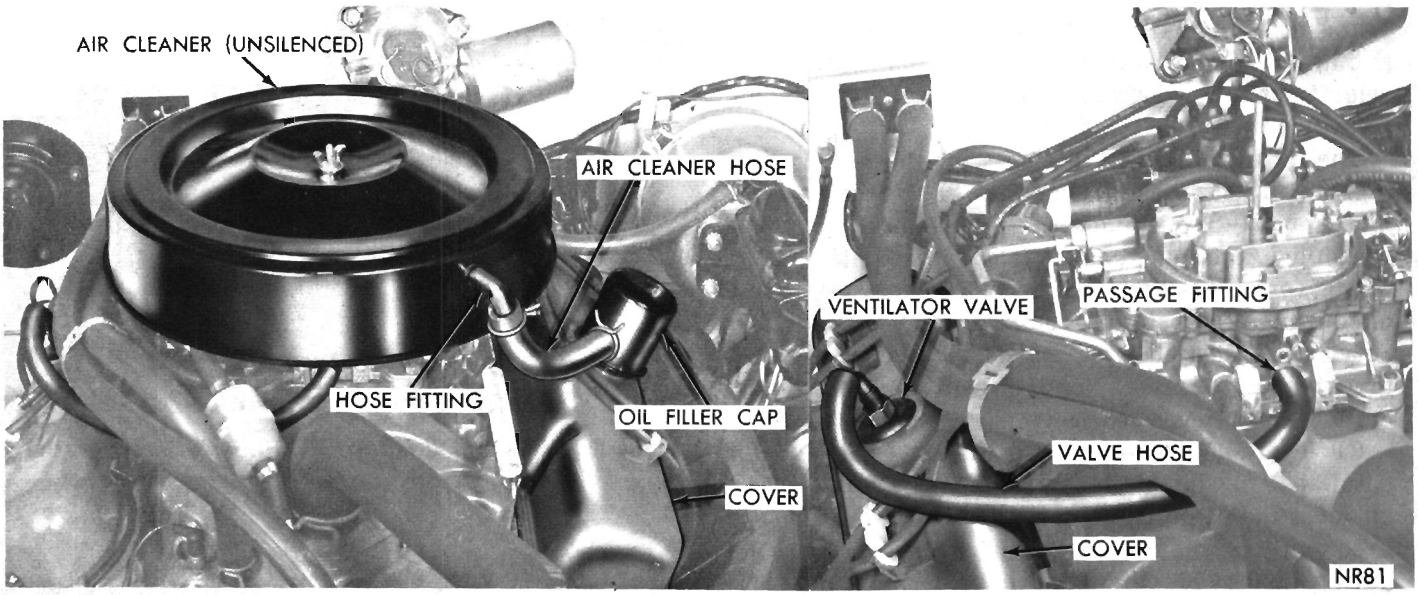

Fig. 26—Fully Closed Crankcase Ventilation System

through the connecting hose to the filler cap (Fig. 27) is circulated through the engine and drawn out of the cylinder head cover, through a valve mounted in the cover, by manifold vacuum; through another connecting hose to a fitting in a passage in the carburetor throttle valve body, into the combustion chamber, and dispelled with the exhaust gases.

Servicing Frequencies

Proper maintenance of the crankcase ventilation system is required to keep the system clean and maintain good engine performance and durability. Periodic servicing is required to remove combustion products from the ventilator valve, hoses, carburetor passages and oil filler cap.

Every **six months** the system must be tested for proper operation and cleaned if necessary. This includes inspecting the operation of the valve, checking the hoses and carburetor passages for deposits and cleaning the oil filler cap and carburetor air cleaner.

The crankcase ventilator valve must be replaced with a new one **every year.** The carburetor air cleaner filter element must be replaced **every year** on High Performance Vehicles equipped with "Fresh Air Induction System", and **every 2 years** for vehicles equipped with standard air cleaner.

If the car is used extensively for short trips with frequent idling, the ventilation system may require servicing more frequently.

Servicing Procedure

Remove hose from carburetor air cleaner (Fig. 28).

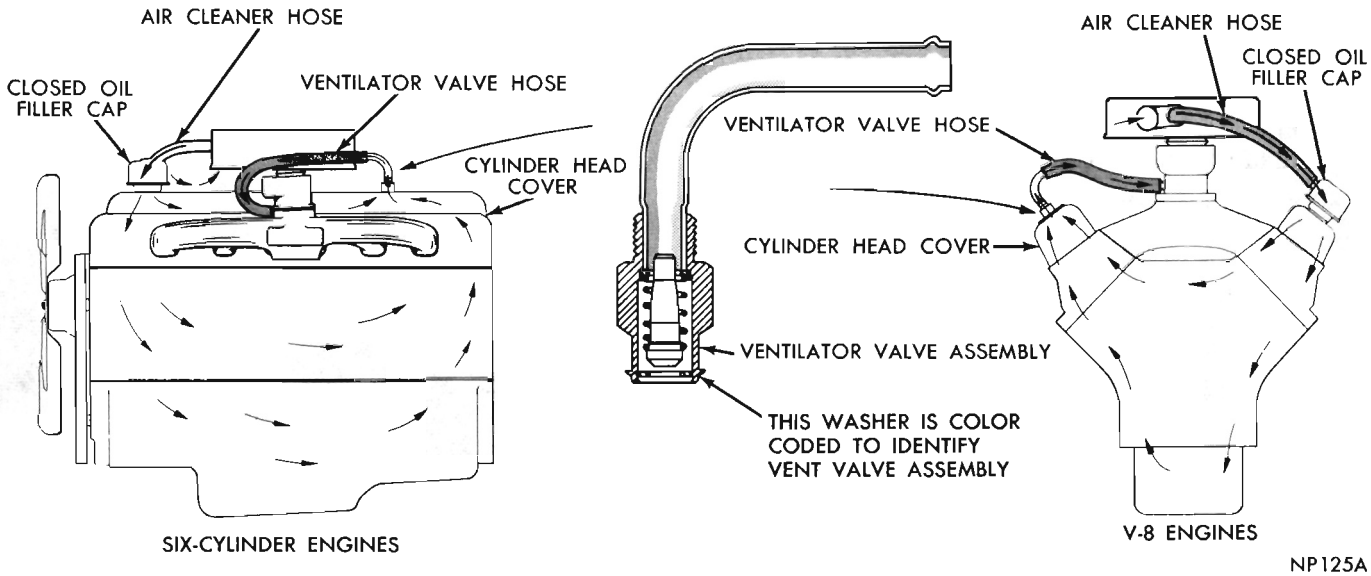

Fig. 27—Air Circulation—Fully Closed Crankcase Ventilation System

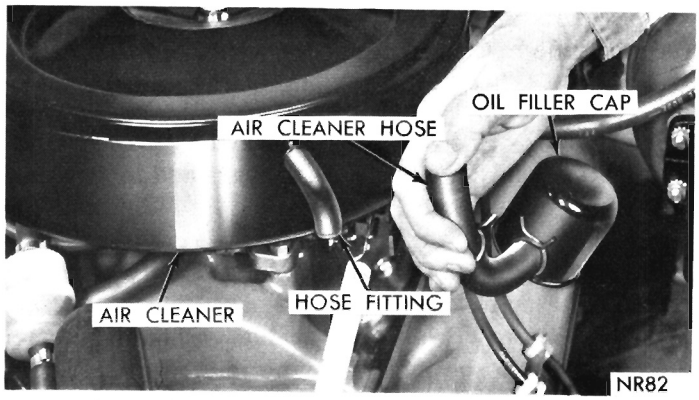

Fig. 28—Checking Vacuum at Carburetor Air Cleaner Hose

With engine operating at idle, vacuum should be felt when a finger is placed over hose opening. If vacuum is felt, a final test should be made to be certain valve shuttle is free. With ventilator valve removed from cylinder head cover, engine not running, a clicking noise should be heard when valve is shaken (Fig. 29). If the noise is heard, the system is satisfactory and no further testing is necessary.

However, if no vacuum is felt at end of air cleaner hose, remove oil filler cap and loosely hold a stiff paper or parts tag over oil filler tube (Fig. 30). Within a few seconds, it should be sucked against the tube with a holding force. A holding force indicates a plugged air cleaner hose and the system should be cleaned.

If paper is not sucked against filler tube, remove ventilator valve from cylinder head cover. If valve is not plugged, a hissing noise will be heard as air passes through valve and a strong vacuum should be felt when a finger is placed over valve inlet (Fig. 31).

If vacuum is not felt at valve inlet, remove valve hose at base of carburetor. A distinct vacuum should be felt at end of fitting in carburetor (Fig. 32). If it is not felt, the carburetor must be removed and passages cleaned. Dip lower end of carburetor in Carburetor Cleaner, part number 2933500 or equivalent. Hand turn a 1/4 inch drill through passage to dislodge solid particles, then blow clean. **IMPORTANT: Make sure drill size used will not remove any metal. Use a smaller size, if necessary. It is not necessary to disassemble carburetor for this service.**

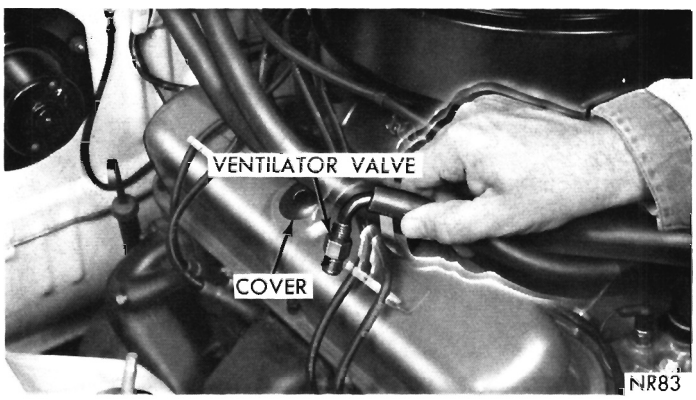

Fig. 29—Shaking Ventilator Valve

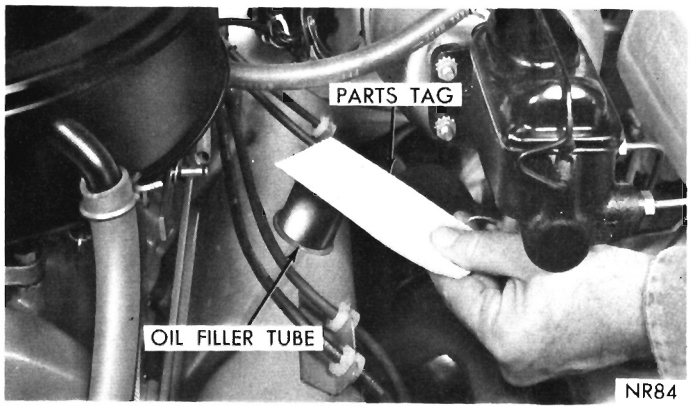

Fig. 30—Checking Vacuum at Oil Filler Tube

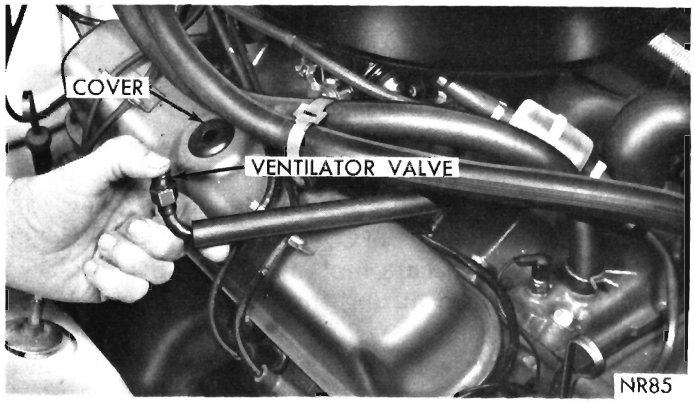

Fig. 31—Check Vacuum at Ventilator Valve Inlet

The hoses, oil filler cap and air cleaner should be cleaned as outlined in their respective paragraphs. **Do not attempt to clean the valve; replace it with a new one.** On 170 and 225 cubic inch engines, the valve is identified by a white end washer. On V-8 engines, the valve is identified by a black end washer.

All components that do not allow passage of air through the system after the cleaning operation, should be replaced.

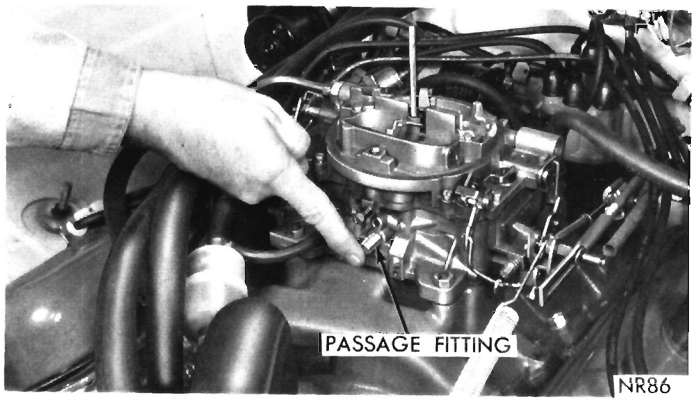

Fig. 32—Checking Vacuum at Carburetor Throttle Body Passage Fitting

Oil Filler Cap

Disconnect the air cleaner hose at the filler cap (Fig. 27). Remove filler cap and wash it thoroughly in kerosene, or other suitable solvents. Shake out surplus solvent. Lubricate the filter element in the cap by inverting and filling the cap with SAE-30 engine oil. Drain excess oil thoroughly through the vent tube. (Fig. 33).

Hoses

Clean hoses by immersing in Carburetor Cleaner, Part Number 2933500 or equivalent, followed by drying with compressed air. **Hoses should not remain in solvent more than one-half hour.**

ENGINE PERFORMANCE EVALUATION

Engine operating efficiency depends on correct ignition, carburetor adjustments, and correct valve lash where applicable. To obtain best engine performance, Chrysler Corporation recommends that the engine be evaluated every 12 months or 12,000 miles, whichever occurs first, and tuned if necessary. Services performed during this evaluation should include the following:

1—Spark Plugs—Remove and inspect each spark plug. Most plugs can be cleaned, adjusted, and reinstalled. Rough idle, hard starting, frequent engine miss at high speeds, or apparent physical deterioration, are indications that the spark plugs should be replaced.

2—Distributor—Inspect distributor cap and rotor. Test resistance of secondary cables. Check breaker contacts for abnormal pitting, bluing, or misalignment, and adjust, if serviceable, or replace. Lubricate cam and wick, (see page 13). See "Ignition System" Group 8 Electrical, for tests and adjustments.

3—Carburetor—Remove and clean air filter. Check operation of manifold heat control valve shaft, choke valve shaft and choke diaphragm; use solvents recommended. Clean crankcase ventilation system, (see page 15). See "Fuel System," Group 14, for carburetor adjustment procedures.

4—Battery—Check specific gravity. Clean and tighten terminals; apply grease to posts and terminals. Check circuit voltages as described in "Electrical," Group 8.

5—Starting Motor—Test cranking ability as described in "Electrical," Group 8.

6—Valve Lash (where applicable)—Should an engine continue to be noisy and the idle rough after a tune-up, adjust valve lash to specifications. Refer to "Engine," Group 9, for lash values and instructions.



NK577

Fig. 33—Closed Type Oil Filler Cap

MANIFOLD HEAT CONTROL VALVE

Freedom of movement of the heat control valve, by removing lead deposits from the valve shaft bearings, is assured by application of suitable solvent. Such a solvent is available under Part Number 2525054, Manifold Heat Control Solvent.

Every engine oil change, apply solvent to both ends of valve shaft where it rotates in bushings (Figs. 34, 35, 35A, 36 or 37.) Apply solvent when manifold is **COOL.** Allow solvent to soak a few minutes, then work valve shaft back and forth until it moves freely.

CARBURETOR AIR CLEANERS

Paper Element Type

The paper filter element (Figs. 38, 39, 40 or 41) in the air cleaner should be inspected and cleaned every six months and replaced every two years. On high performance vehicles equipped with "Fresh Air Induction System" clean filter every oil change and replace every year.

Use a Chrysler Corporation filter element, or equivalent, for replacement.

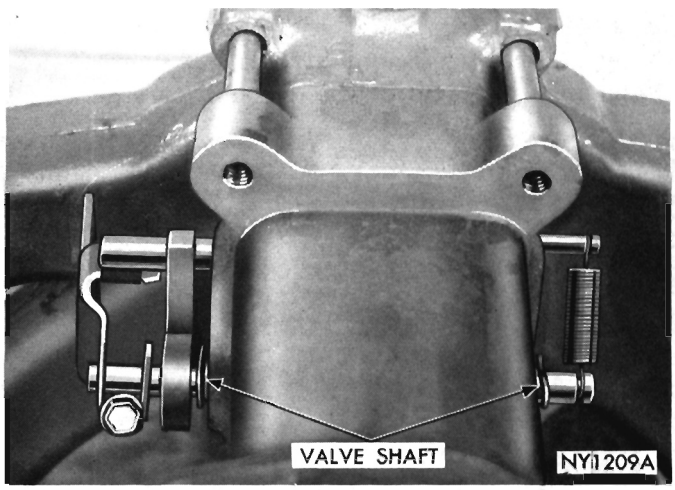

Fig. 34—Manifold Heat Control Valve (6 Cylinder Engine)

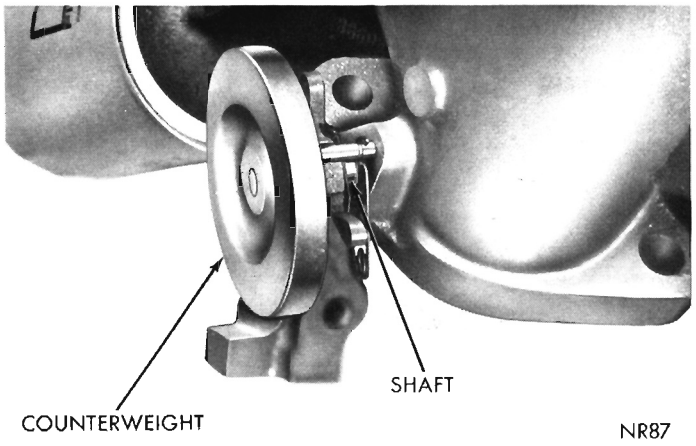

Fig. 35—Manifold Heat Control Valve (340 Cu. In. Engine)

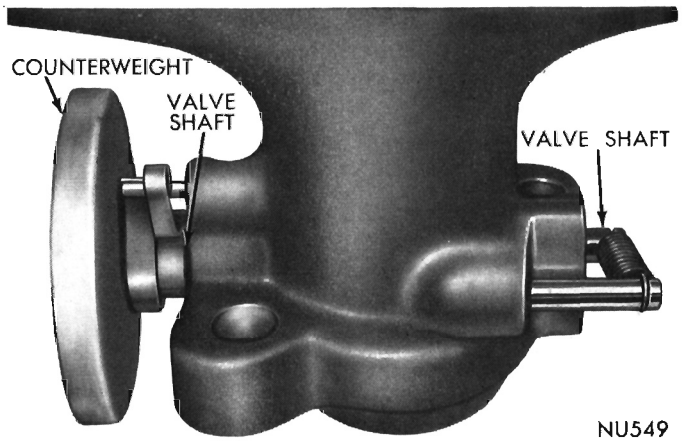

Fig. 35A—Manifold Heat Control Valve (273, 318 Cu. In. Engine)

Disconnect the air cleaner hose at the air cleaner. Remove cleaner from carburetor and remove filter element from cleaner.

Examine filter element. If the filter element is saturated with oil for more than one-half its circumference, replace the element and check the rest of the crankcase ventilating system for proper functioning.

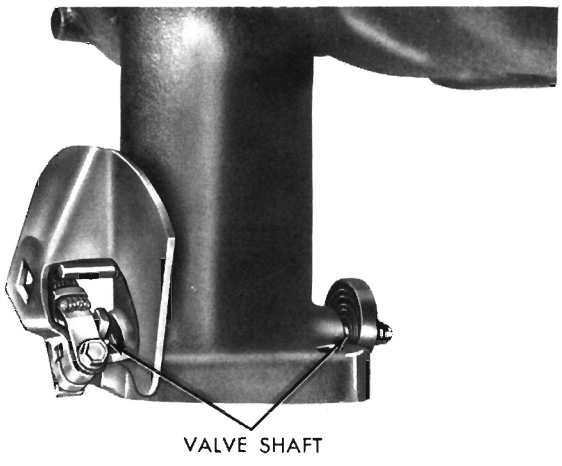

Fig. 36—Manifold Heat Control Valve (383, 440 Cu. In. Engine)

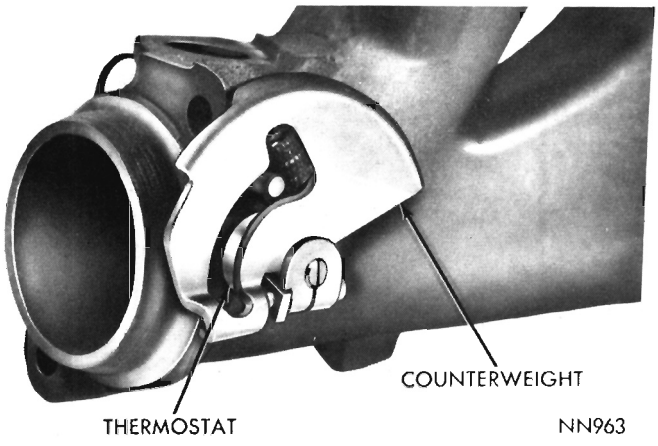

Fig. 37 Header Heat Control Valve (426 Hemi Engine)

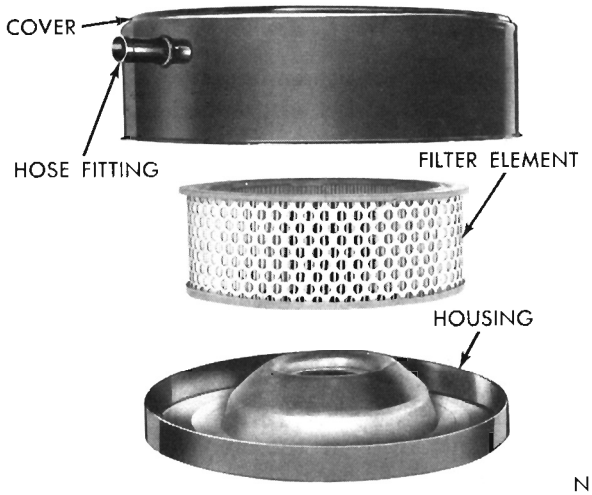

Fig. 38—Carburetor Air Cleaner (Dry Type—6 Cylinder Engine)

To clean the element, use compressed air by holding air nozzle at least two inches from inside screen (Fig.

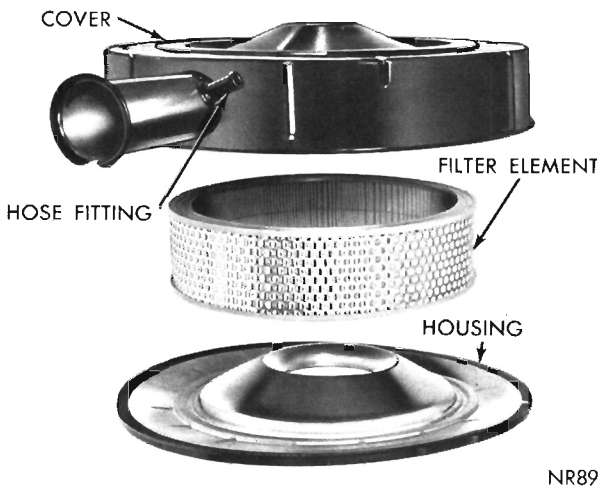

Fig. 39—Carburetor Air Cleaner (Silenced Dry Type—8 Cylinder Engines)

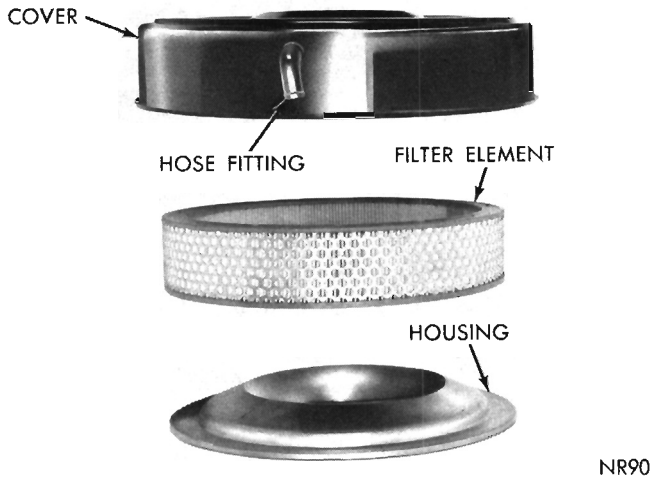

Fig. 40—Carburetor Air Cleaner (Unsilenced Dry Type—8 Cylinder Engines)

42). **CAUTION: Do not use compressed air on outside surface of element as this will embed foreign matter in the element paper.**

After cleaning, examine element for punctures. Discard an element that has small pin-point punctures. Examine soft plastic sealing rings on both sides of element for smoothness and uniformity.

At this time, also, service the Carburetor Choke Valve Shaft and Fast Idle Cam as outlined.

Reassemble cleaner and install on carburetor.

Oil Bath Type (Extra Equipment)

The sediment level in the air cleaner (Fig. 43) should be examined every second oil change, or more frequently under severe operating conditions, such as in dusty areas.

If the sediment builds up to within 3/8 inch of the shelf, discard old oil and thoroughly clean the air cleaner. In any event, the cleaner should be cleaned at least once a year.

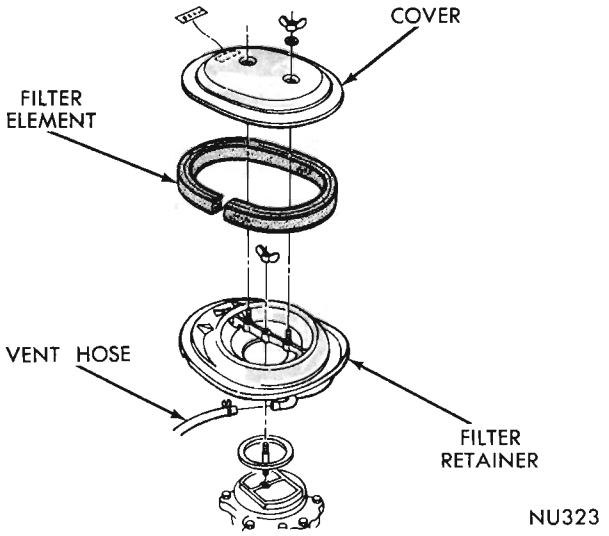

Fig. 41—Carburetor Air Cleaner (Fresh Air System)



Fig. 42—Cleaning Filter Element

To clean, remove cover and filter element, wash element thoroughly in kerosene and drain. Element should be washed in an upright position to prevent the accumulation of dirt on the top side of the element and the underside of the cover during the washing operation, dirt accumulation due to improper element cleaning will result in increased engine wear rate. Clean reservoir thoroughly and fill to indicated level with one pint SAE 10W-30 engine oil. This grade is suitable for all temperatures.

Reassemble cleaner and install on carburetor.

CARBURETOR CHOKE VALVE SHAFT

Every six months, apply Carburetor Cleaner, Part Number 2933500 or equivalent, to both ends of choke valve shaft where it passes through the air horn (Fig. 44). At same time, move choke shaft back and forth until deposits are flushed out. Run engine at idle to clean out excess cleaner from carburetor and intake manifold.

Also, apply same type of cleaner to fast idle cam and pivot pin to remove dirt, oil and any other deposits that may have collected and cause sticking or erratic motion.

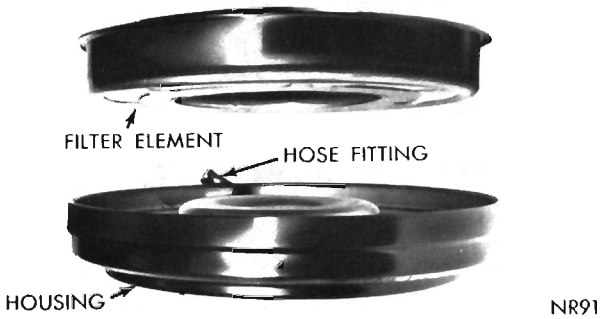

Fig. 43—Carburetor Air Cleaner (Oil Bath—Typical)

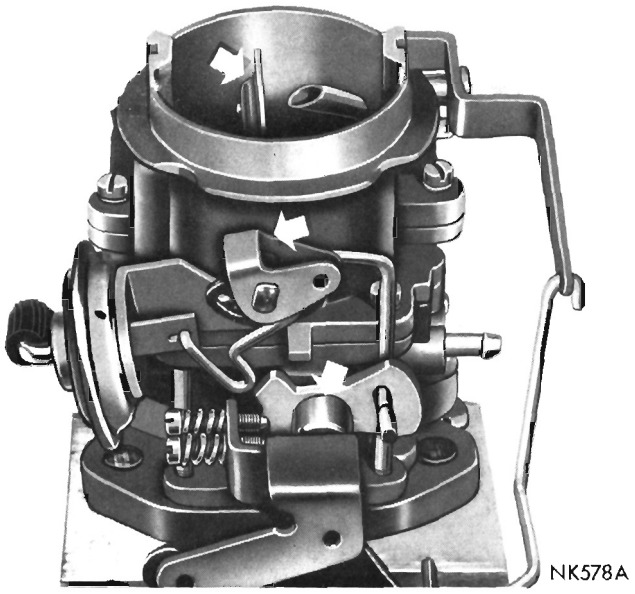

Fig. 44—Choke Valve Shaft and Fast Idle Cam Lubrication

This service will assure freedom of movement of the choke mechanism.

FUEL FILTERS

The fuel filters (Figs. 45, 46, and 47) are of the disposable type. Under normal operating conditions, filter should be replaced every 24 months or 24,000 miles, whichever occurs first. Should an excessive amount of foreign matter accumulate in fuel tank, filter may require replacing more frequently.

After installing new filter, run engine for several minutes and check for leaks at connections.

PROPELLER SHAFT AND UNIVERSAL JOINTS

Under normal operating conditions, relubrication of the propeller shaft universal joint is not recommended. Every six months, however, the front and rear joints (Figs. 48 and 49) should be inspected for external leakage or damaged seals.

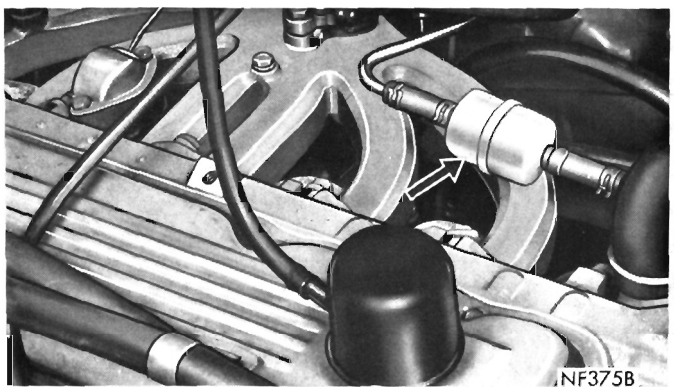

Fig. 45—Fuel Filter (6 Cylinder Engines)

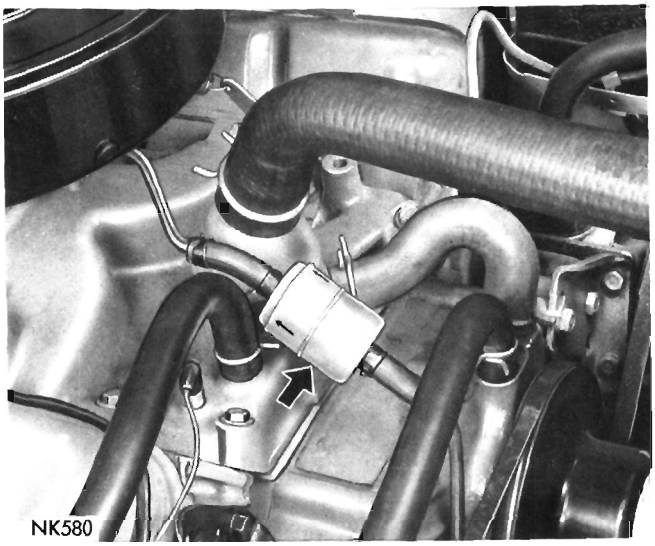

Fig. 46—Fuel Filter (273, 318, 340 Cu. In. Engines)

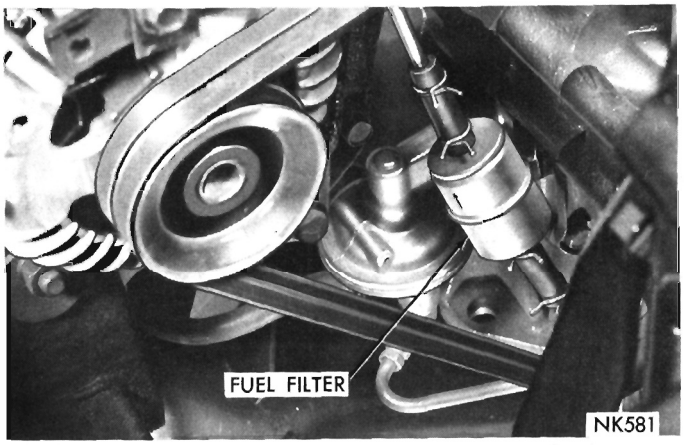

Fig. 47—Fuel Filter (383, 426, 440 Cu. In. Engines)

The joints should not be disassembled for relubrication unless external leakage or damage is observed.

When necessary to replace seals on universal joints disassemble joints as outlined under "Propeller Shaft and Universal Joints," Group 16. Clean and inspect all parts for serviceability. Replace damaged parts as required. Repack bearings, using a Multi-Purpose Grease, NLGI grade 2 EP, such as Multi-Mileage Lubricant, Part Number 2525035.



Fig. 48—Front Universal Joint

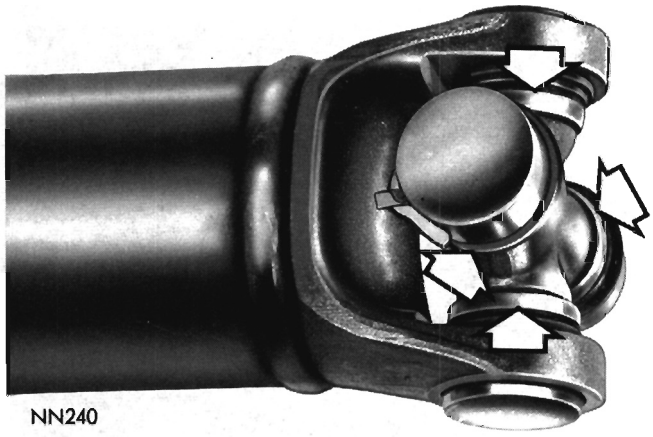

Fig. 49—Rear Universal Joint

Severe Service Requirements

When the vehicle is operated under conditions classified as severe service, as outlined below, the universal joints should be inspected for leakage at seals every 3 months or 4,000 miles, whichever occurs first.

(a) Continuous operation at higher than normal loading.

(b) Very dusty, dirty or sandy operating conditions.

Under these conditions, the universal joints should be disassembled, cleaned and relubricated every 36 months or 36,000 miles, using a Multi-Purpose Grease, NLGI grade 2 EP, such as Multi-Mileage Lubricant, Part Number 2525035.

STEERING GEAR

Manual

The lubricant installed in the steering gear at time of assembly is a high quality product and regularly scheduled changes are not required.

Every six months, remove plug in steering gear housing (Fig. 50) and check lubricant level. Lubricant should cover worm gear.

If lubricant is below prescribed level, replenish with Multi-Purpose Gear Oil SAE 90, as defined by MIL-L-2105B. This is suitable for all temperatures. Special Sure-Grip Lubricant, Part Number 2585318, is a fluid of this type and its use is recommended.

CAUTION: When filling, do not use a pressure gun as high pressure may damage the seals.

Power Steering

Check fluid level in power steering reservoir every engine oil change. On 1.06 pump (Fig. 51) when fluid is **cold,** level should be between 1-3/4 and 2-1/4 inches below top of filler neck. When fluid is **hot** the level will rise approximately 1 inch.

Some V-8 engines are equipped with a .94 Power Steering Pump (Fig. 52) identified by an oval shaped filler tube and a filler cap with a built-in dip stick

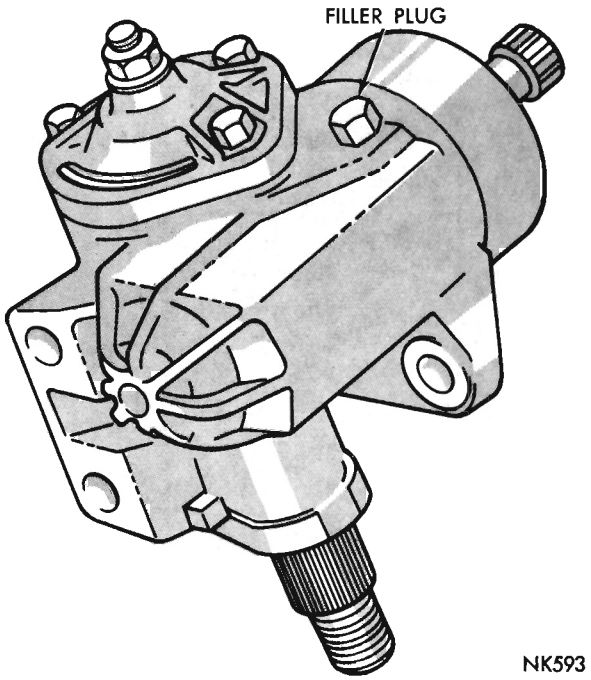

Fig. 50—Manual Steering Gear Filler Plug

marked "FULL" and "ADD".

To check fluid level, first allow fluid to warm up to normal operating temperature. Level should be at "FULL" mark. If level is low, replenish to the "FULL" mark with recommended fluid.

CAUTION: Before removing filler neck cap, wipe it carefully to prevent accumulated dirt from dropping into reservoir.

To restore level, if necessary, replenish with hydraulic fluid specially formulated for minimum effect on rubber hoses. Such a fluid is available under Part Number 2084329, Power Steering Fluid.

TRANSMISSION (Manual)

Three-Speed

The lubricant installed in the transmission at the time of assembly is a high quality product and regularly scheduled changes are not required for vehicles

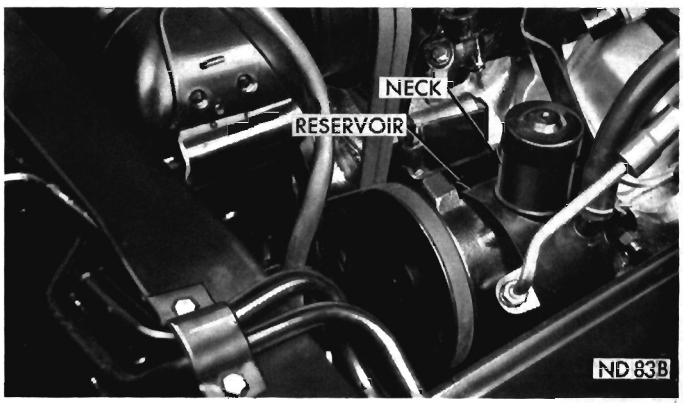

Fig. 51—Power Steering Pump Reservoir (1.06 Pump)

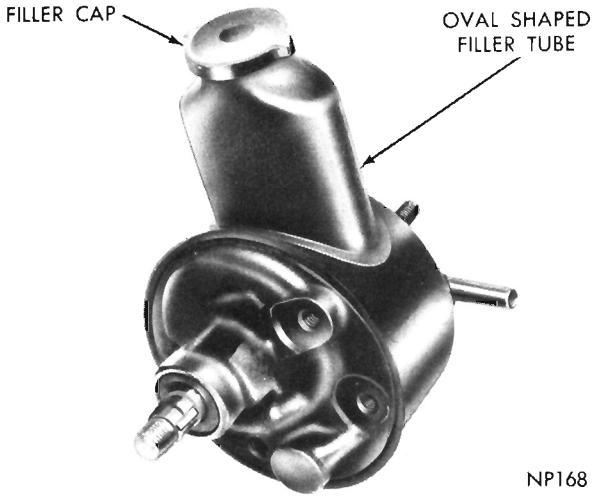

Fig. 52—Power Steering Pump Reservoir (.94 Pump)

whose operation is classified as normal service for passenger cars.

The fluid level should be checked every six months. The correct level is at the bottom of the filler plug hole (Fig. 53). Replenish if necessary with automatic transmission fluid. Use only fluids of the type labeled Dexron "Automatic Transmission Fluid or Chrysler Automatic Transmission Fluid AQ-ATF-2848A", available under Part Number 1843314.

In warm climates, if desired, the Automatic Transmission fluid may be drained and the transmission refilled with Multi-Purpose Gear Lubricant SAE 90, as defined by MIL-L-2105B.

When vehicle is used for other than normal service, or for towing trailers, refer to "Trailer Towing Service," for recommended servicing.

Four-Speed

The transmission is filled at the factory with a special gear lubricant and regularly scheduled changes are not required for vehicles whose operation is classified as normal service for passenger cars.

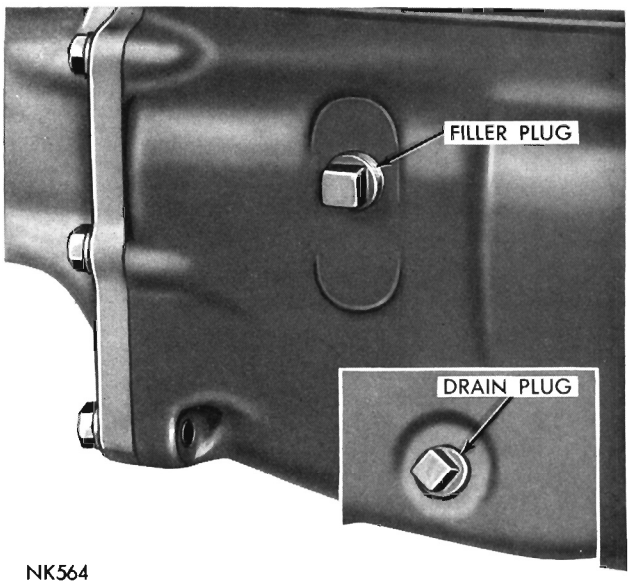

Fig. 53—Transmission Filler and Drain Plugs

The fluid level, however, should be checked every six months. The correct level is at the bottom of the filler plug hole (Fig. 53). If lubricant is below the specified level, replenish with Multi-Purpose Gear Lubricant SAE 140, as defined by MIL-L-2105B.

During cold weather, if shift effort becomes extremely high, transmission should be drained and refilled with Multi-Purpose Gear Lubricant SAE 80 or SAE 90, as defined by MIL-L-2105B or with automatic transmission fluid types labeled "Dexron Automatic Transmission Fluid or Chrysler Automatic Transmission Fluid AQ-ATF-2848A" available under Part Number 1843314. Automatic transmission Fluid should be replaced with Multi-Purpose Gear Lubricant SAE 140 in warm weather. **No other lubricants should be used.**

Trailer Towing and Severe Service

For vehicles equipped for trailer towing service, or if the regular operation of the vehicle is classified as severe, the transmission lubricant level should be checked every 3 months or 4,000 miles, whichever occurs first.

The transmission should be drained and refilled with the specified lubricant, initially after 36 months or 36,000 miles, whichever occurs first, and every 12 months or 12,000 miles, thereafter, whichever occurs first.

Column-Mounted Transmission Gearshift Controls

If operation of the gearshift controls becomes noisy or the shift effort becomes objectionable, lubricate linkage at lower end of steering column (Fig. 54).

Apply a film of Multi-Mileage Lubricant, Part Number 2525035, or Multi-Purpose Grease, NLGI grade 2 EP, to contact surfaces on levers (Fig. 54).

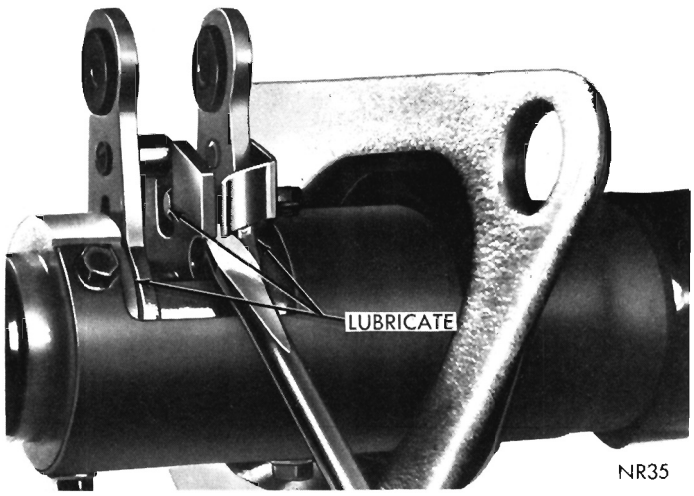

Fig. 54—Column Mounted Transmission Gearshift Control Lubrication

Floor-Mounted Transmission Gearshift Mechanism

If operation of the mechanism becomes difficult, remove rubber boot on floor panel and apply a few drops of light engine oil to the mechanism.

In addition, from under vehicle, apply light engine oil to rod ends in operating levers (Fig. 55).

TRANSMISSION (Automatic)

Frequency of Fluid Change (All Models except with 426 Hemi Engine)

For vehicles operated under normal service conditions, the transmission fluid and filter will provide satisfactory lubrication and protection to the transmission. Therefore, periodic fluid changes are not required.

IMPORTANT: If, for any reason, the factory fill fluid is replaced with another fluid, the fluid and filter must be changed and band adjustment checked every 36 months or 36,000 miles, whichever occurs first, in normal service.

Frequency of Fluid Change (Vehicles Equipped with 426 Hemi Engine)

The factory fill fluid should be changed after the first 24 months or 24,000 miles, whichever occurs first, and periodically, thereafter, every 12 months or 12,000 miles, whichever occurs first. The filter should be changed and the band adjustment checked with each fluid change.

If, for any reason, the factory fill fluid is replaced with another fluid, prior to the 24 months or 24,000 miles interval, the fluid and filter should be changed and band adjustment checked every 12 months or 12,000 miles, thereafter, whichever occurs first, after the change to the field fluid.

Fluid Level Check

The fluid level should be checked every six months. This check should be made when engine temperature gauge indicates a normal warmed-up condition and transmission fluid is heated to its normal operating temperature. Check level with parking brake applied firmly and the engine idling.

CAUTION: Before removing level indicator, wipe off cap and top of filler tube to prevent accumulated dirt from dropping into transmission filler tube.

After engine has idled for about two minutes, move gearshift lever slowly through all gear positions, pausing momentarily in each and ending with lever in "N" position.

When fluid is "hot," level should be at the "FULL" mark, or slightly below, but **never above** the "FULL" mark (Fig. 56) to avoid foaming of the fluid. Fluid should be added or extracted, depending upon the reading, to restore level as specified.

Restore fluid level when necessary with automatic transmission fluid. Use only fluids of the type labeled "Dexron Automatic Transmission Fluid or Chrysler Automatic Transmission Fluid AQ-ATF-2848A", available under Part Number 1843314. Exception to this is a sealer which introduces a small amount of swelling of the seals to reduce fluid leakage resulting from hardening or shrinking of the seals in high mileage vehicles. Such a product is available under Part Number 2298923, Transmission Sealer.

Trailer Towing Service and Severe Usage (All models except those equipped with 426 Hemi engine)

When the vehicle is equipped for trailer towing service, or if the operation of the vehicle is classified as severe, as outlined below, the fluid level should be checked every 3 months or 4,000 miles, whichever occurs first.

(a) Police and taxicab operation.

(b) Frequent towing of trailers.

(c) Continuous operation at higher than normal loading.

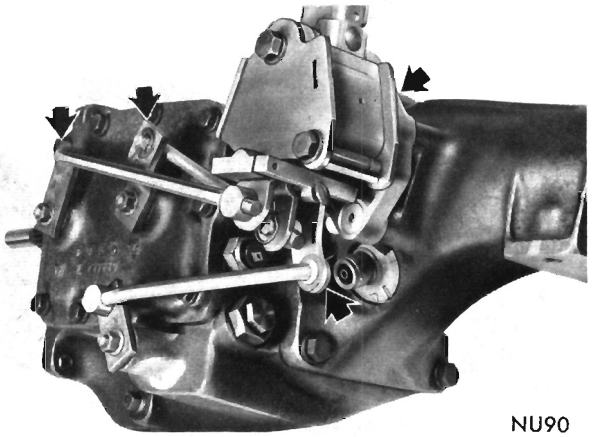

NU90

Fig. 55—Floor Mounted Transmission Gearshift Mechanism Lubrication



ND167A

Fig. 56—Transmission Level Indicator Markings

Under these conditions, the fluid and filter should be replaced and bands adjusted initially after 36 months or 36,000 miles, whichever occurs first, and every 12 months or 12,000 miles, thereafter, whichever occurs first.

For transmission fluid draining and refilling service, filter replacement and band adjustment procedures, see "TorqueFlite Transmission," Group 21.

FRONT WHEEL BEARINGS

The condition and quantity of the lubricant in the front wheel bearings on cars equipped with either drum or disc type brakes should be inspected whenever the wheels are removed to inspect or service the brake system. Brake system inspection is recommended every 12 months or 12,000 miles whichever occurs first.

When inspection of the wheel bearing lubricant indicates it is low in quantity, contains dirt, or has been contaminated by water to produce a milky appearance, bearings and hub should be cleaned, inspected and relubricated.

CAUTION: To avoid possible contamination of lubricant by mixing lubricants that are not compatible, do not add lubricant to the bearings.

Thoroughly clean old lubricant from bearings and hubs. Carefully examine cups, rollers, and inner race of cone for brinnelling or spalling. Bearing should be replaced if any defects exist.

Discard old seals. Repack bearings and hubs with Multi-Purpose Grease, NLGI grade 2 EP, or Multi-Mileage Lubricant, Part Number 2525035. When repacking hubs (Fig. 57), make sure all surfaces of hub and outer grease cup interiors are covered with lubricant to minimize condensation and lubricant travel out of bearing. **DO NOT OVER FILL.**

Adjust bearings as follows:

(1) Install wheel and drum assemblies and tighten wheel nuts on Valiant and Barracuda models to 55 foot-pounds. On Satellite and Fury models tighten nuts to 65 foot-pounds.

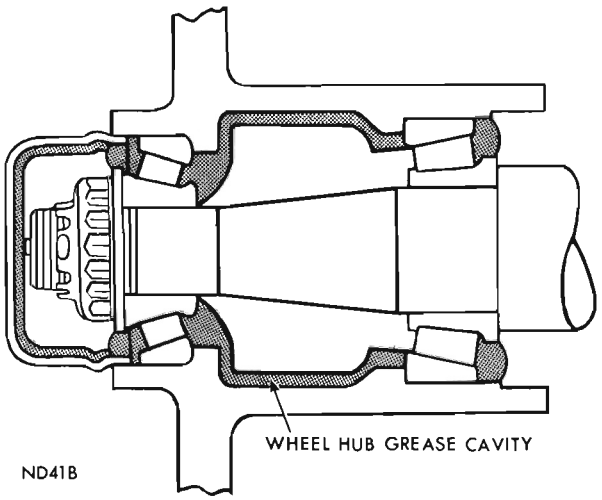

Fig. 57—Front Wheel Bearing Lubrication

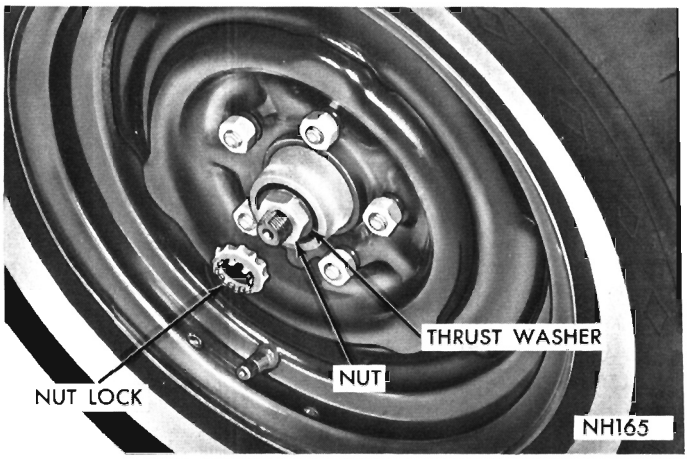

Fig. 58—Front Wheel Bearing Adjustment

(2) Tighten wheel bearing adjusting nut (Fig. 58) to 70 inch-pounds on Valiant and Barracuda models and 90 inch-pounds on Satellite and Fury models, while rotating wheel.

(3) Position nut lock on adjusting nut so one pair of cotter pin slots align with hole in spindle.

(4) Back off adjusting nut and nut lock to the next slot and install cotter pin.

(5) Install wheel covers.

TIRES

Tires, including spare, should be rotated every second oil change according to tire rotation diagram (Fig. 59,) to provide uniform wear, long tire life, and to retain comfortable riding qualities.

If owner insists on a four tire switch only, rotate tires according to diagram (Fig. 60).

Tires should be examined for unusual wear patterns, foreign material and proper inflation pressures. Unusual wear conditions may reflect a need for a change in driving habits or indicate that mechanical corrections may be necessary.

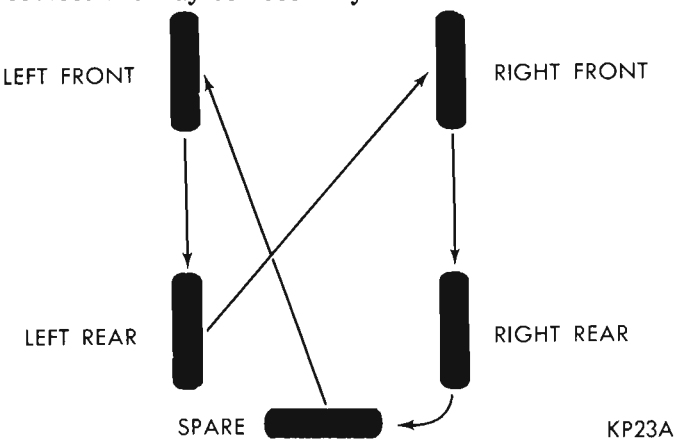

Fig. 59—Tire Rotation Diagram—5 Tires

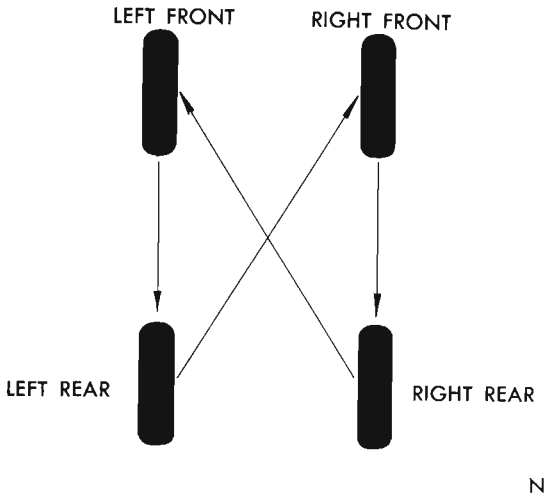

Fig. 60—Tire Rotation Diagram—4 Tires

A decal showing the recommended tire pressure is located on the body pillar at the rear of the left front door opening ("B" post). Refer to "Tires", Group 22, for additional information.

SPEEDOMETER CABLE

To service a noisy speedometer cable, disconnect housing at speedometer head. Remove shaft and clean it thoroughly. Apply a very thin film of speedometer cable lubricant on the shaft. Such a lubricant is available under Part Number 1243632, Speedometer Cable Lubricant. Wipe excess lubricant from the top one-foot of the shaft and from the ferrule.

CAUTION: Excessive lubricant may cause malfunction of the speedometer.

HOOD LOCK, RELEASE MECHANISM AND SAFETY CATCH

Lubrication of the hood latch release mechanisms and safety catch is of vital importance and should be inspected, cleaned and lubricated every 6 months to assure ease of operation and freedom from binding.

Valiant Models

Apply Multi-Purpose Lubricant, NLGI grade 2 EP, or Multi-Mileage Lubricant, Part Number 2525035, sparingly, to sliding contact areas of latch and release lever (Fig. 61). Work the lubricant into the lock mechanism until all frictional surfaces are covered. Also, apply a film of the same lubricant to pivot contact areas of safety catch.

Barracuda Models

Apply Multi-Purpose Lubricant, NLGI grade 2 EP, or Multi-Mileage Lubricant, Part Number 2525035, sparingly to pivot contact surface of hood lock release handle, ends of hood lock release link and sliding

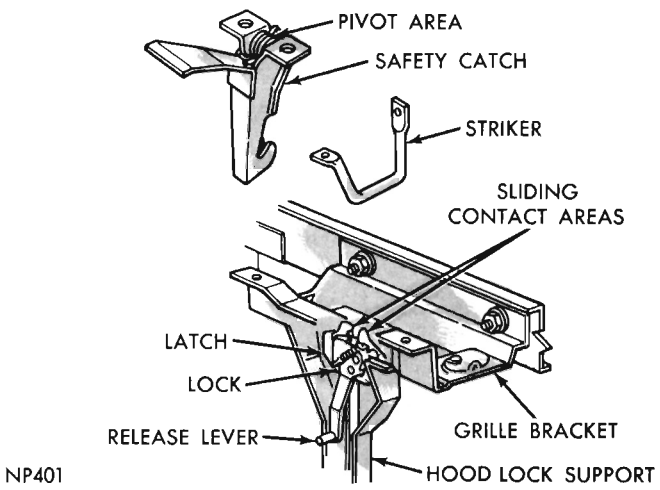

Fig. 61—Hood Lock Lubrication (Valiant Models)

contact areas of latch (Fig. 62). Work the lubricant into the lock mechanism until all frictional surfaces are covered. Also, apply a film of the same lubricant to pivot contact areas of safety catch.

Satellite and Fury Models

Apply Multi-Purpose Lubricant, NLGI grade 2 EP, or Multi-Mileage Lubricant, Part Number 2525035, sparingly to sliding contact areas of latch and release lever (Figs. 63 and 64). Work the lubricant into the lock mechanism until all frictional surfaces are covered. Also, apply a film of the same lubricant to pivot contact areas of safety catch.

BODY MAINTENANCE

Body and other operating mechanisms should be inspected, and relubricated as needed. This is necessary to maintain ease of operation and to provide protection against rust and wear.

Prior to applying any lubricant, wipe the parts clean to remove dust and grit. After lubricating parts, remove excess oil or lubricant.

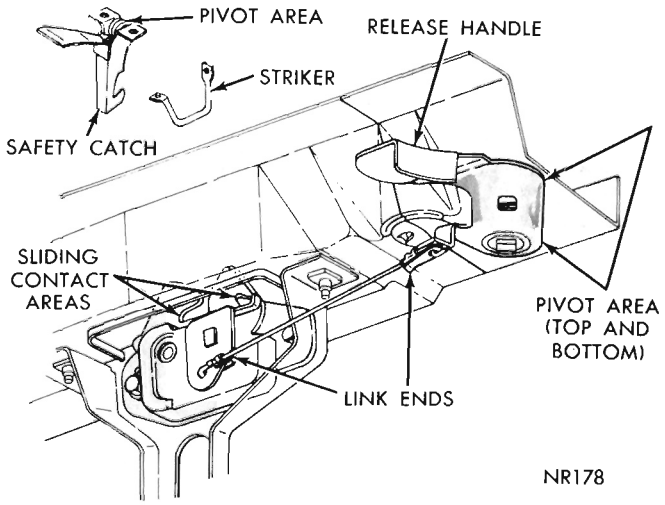

Fig. 62—Hood Lock Lubrication (Barracuda Models)

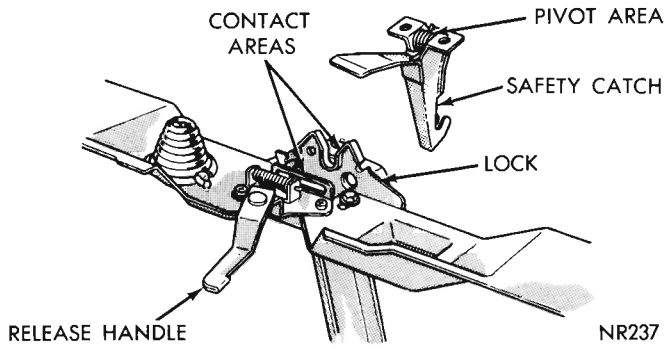

Fig. 63—Hood Lock Lubrication (Satellite Models)

Relubricate mechanisms as outlined in the following paragraphs. **Where Lubriplate is specified, use a smooth, white body hardware lubricant conforming to NLGI grade 1. A suitable lubricant is available under Part Number 1064768.**
Where Door Ease Lubricant is specified, use a stainless wax type lubricant. Such a lubricant is available under Part Number 774512.

Lock Cylinders

When necessary, apply a thin film of Lubriplate directly to key. Insert key into lock and actuate several times. Wipe excess lubricant from key.

Particular attention should be given to external lock cylinders during fall and winter months to insure protection from water and ice.

Hood Hinges (Torsion Spring Type Valiant and Barracuda Models)

Apply engine oil to the two link pivots on each side of the hinge (Fig. 65).

Hood Hinges (Gear and Torsion Bar Types) (Satellite Models)

Apply Lubriplate, sparingly, to all pivot points, gear teeth and spring ends (Fig. 66).

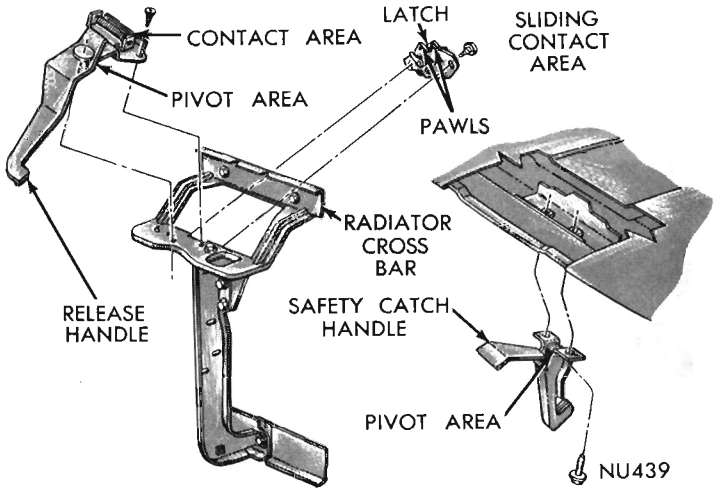

Fig. 64—Hood Lock Lubrication (Fury Models)

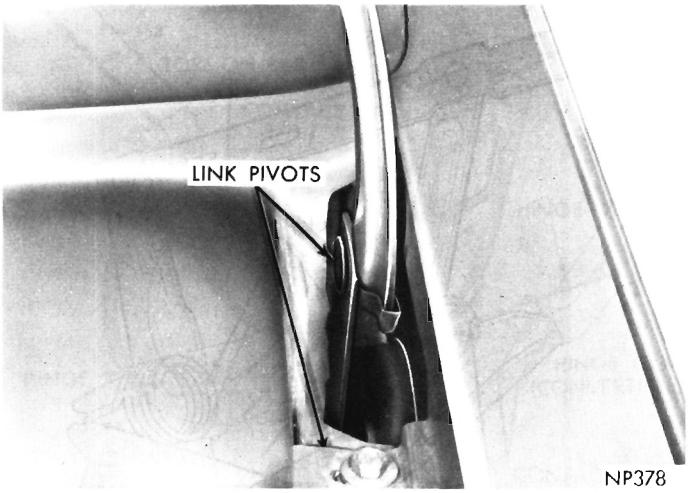

Fig. 65—Hood Hinge Lubrication (Valiant and Barracuda Models)

Hood Hinges (Fury Models)

Apply Lubriplate, sparingly, to all pivot points and torsion bar contact areas (Fig. 67). **Do not apply lubricant to torsion bar roller cam surfaces.**

Door Hinges (All Except Fury Models)

On all hinges, apply engine oil to hinge pin ends (Fig. 68).

On lower hinges, in addition, apply engine oil to torsion spring contact points and all pivot contact points.

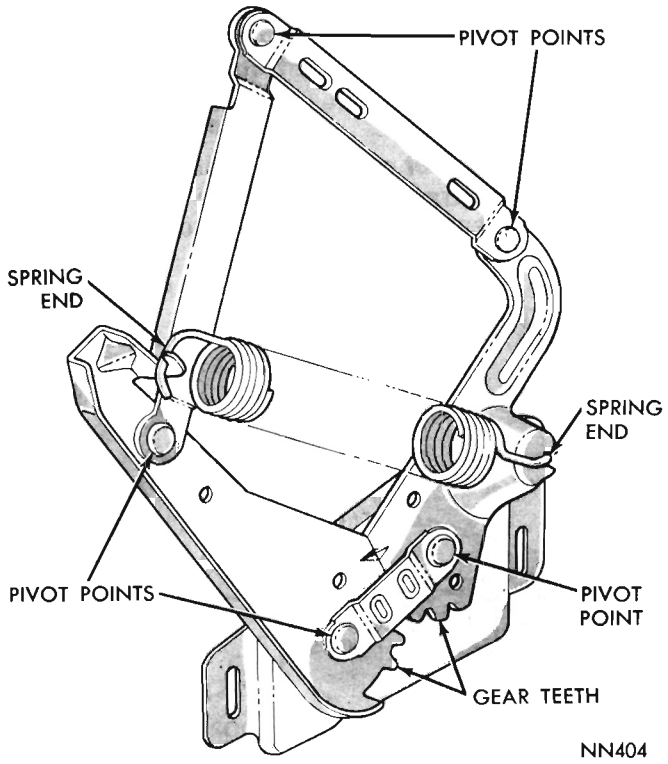

Fig. 66—Hood Hinge Lubrication (Satellite Models)

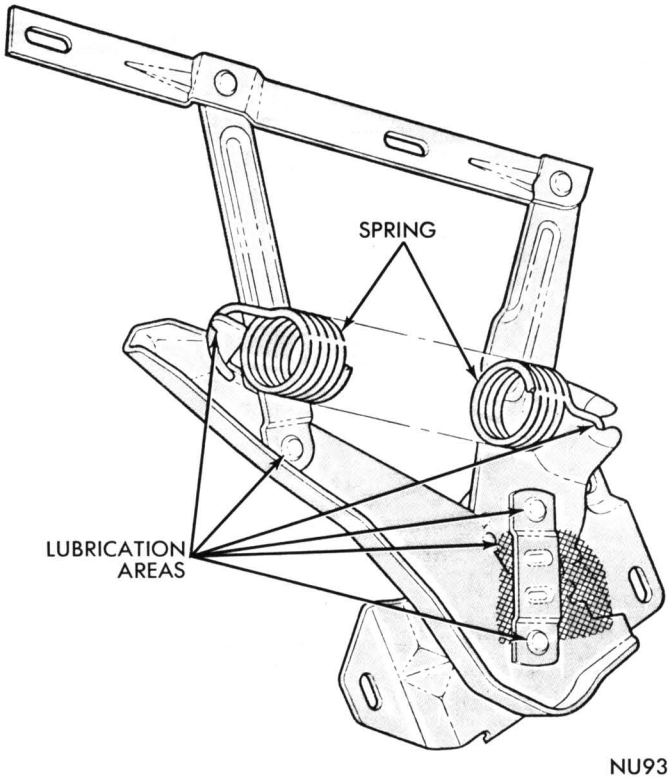

Fig. 67—Hood Hinge Lubrication (Fury Models)

Door Hinges (Fury Models)

On all hinges, apply engine oil to hinge pin ends (Fig. 69).

On lower hinges, in addition, apply engine oil to spring ends and contact areas.

CAUTION: Avoid lubricant on roller surfaces of hinge arm and roller on front and rear door lower hinges.

Door Lock Ratchet and Striker Bolt (Valiant and Barracuda Models)

Apply light engine oil, sparingly, to ratchet pivot

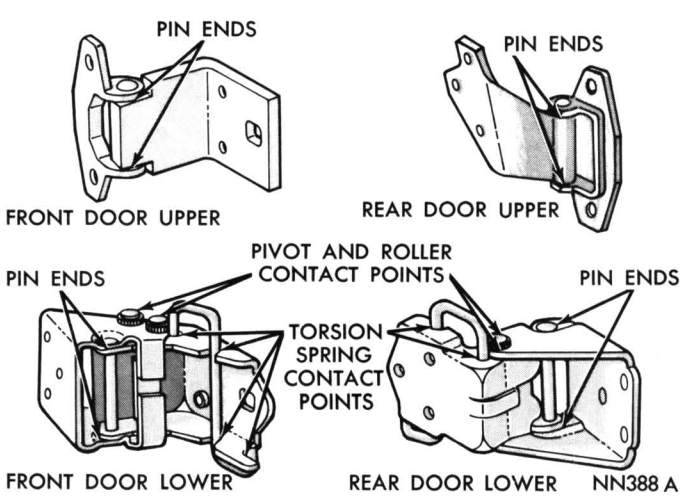

Fig. 68—Door Hinge Lubrication (All Except Fury Models)

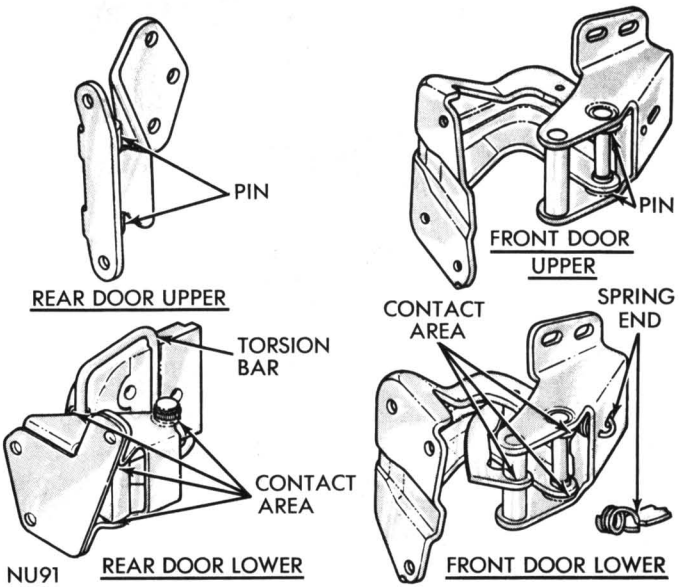

Fig. 69—Door Hinge Lubrication (Fury Models)

areas (Fig. 70). Wipe off excess oil. Apply Door Ease Lubricant to contact area of striker bolt.

Door Latch Striker Rotor (Satellite Models)

Apply light engine oil, sparingly, to outside and inside rotor bearing surfaces (Fig. 71). Wipe off excess oil.

Door Latch Striker Plate (Satellite Models)

Apply Door East Lubricant to striker teeth lock rotor contact surfaces (Fig. 71).

Door Locks and Locking Control Linkage (All Models)

If necessary to inspect operation of and relubricate these parts, remove door trim panel. Apply a film of Lubriplate to all pivot and sliding contact areas.

Door Remote Control Link (All Models)

If necessary to inspect operation of and relubricate these parts, remove door trim panel. Apply a film of Lubriplate to all link end pivots.

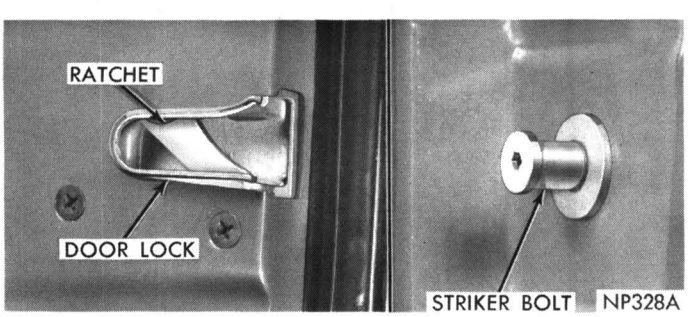

Fig. 70—Door Latch and Striker Bolt (All except Satellite Models)

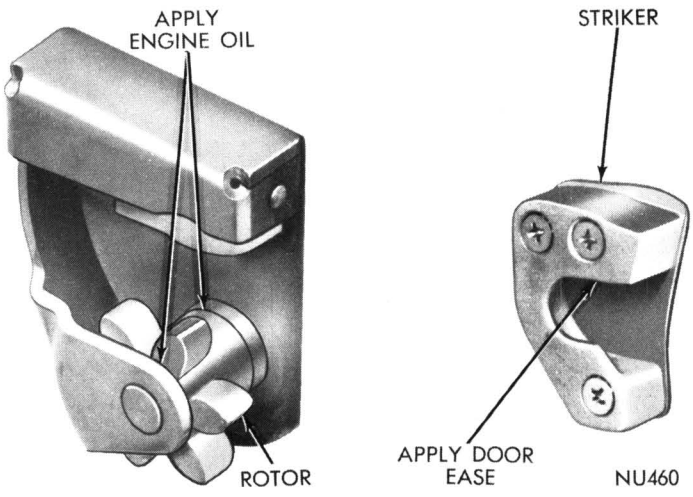

Fig. 71—Door Striker and Rotor (Satellite Models)

Window Regulator, Glass Lower Frame (All Models)

If necessary to inspect operation of and relubricate these parts, remove door or quarter trim panel. Apply Lubriplate, sparingly, to regulator sector gear teeth, assist spring and pivots. Apply Lubriplate, sparingly, to glass lower frame roller slide tracks and roller and bracket assembly pivot points.

Deck Lid Latch (All Models)

Apply Lubriplate, sparingly, to all pivot and sliding contact surfaces (Fig. 72).

Deck Lid Hinge (Valiant and Barracuda except Fastback Model)

Apply Lubriplate, sparingly, to all torsion bar support bearing areas and interior surface of torsion bar slide (Fig. 73). Also, apply Lubriplate, sparingly, to contact surface of hinge cam and slide.

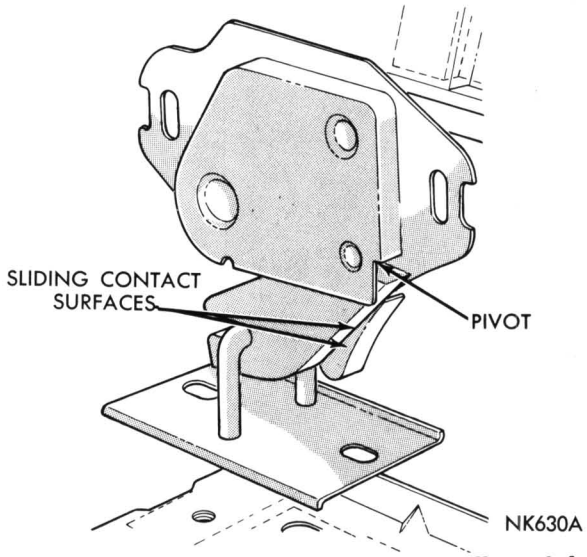

Fig. 72—Deck Lid Latch Lubrication (All Models)

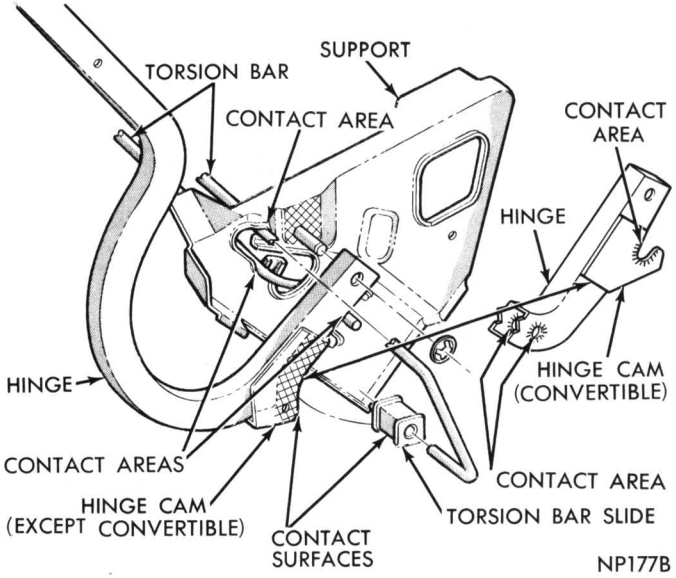

Fig. 73—Deck Lid Hinge Lubrication (Valiant and Barracuda Models)

Deck Lid Hinge (Satellite Models)

Apply Lubriplate, sparingly, to torsion bar support bearing areas, contact surfaces of hinge cam and torsion bar slide (Fig. 74). Also, apply Lubriplate to interior surface of torsion bar slide.

Deck Lid Hinge (Fury Models)

Apply Lubriplate, sparingly, to torsion bar support bearing areas and **interior** surface of torsion bar roller (Fig. 75).

Tail Gate—Door Lubrication (Satellite Models)

Apply engine oil sparingly to upper and lower hinge

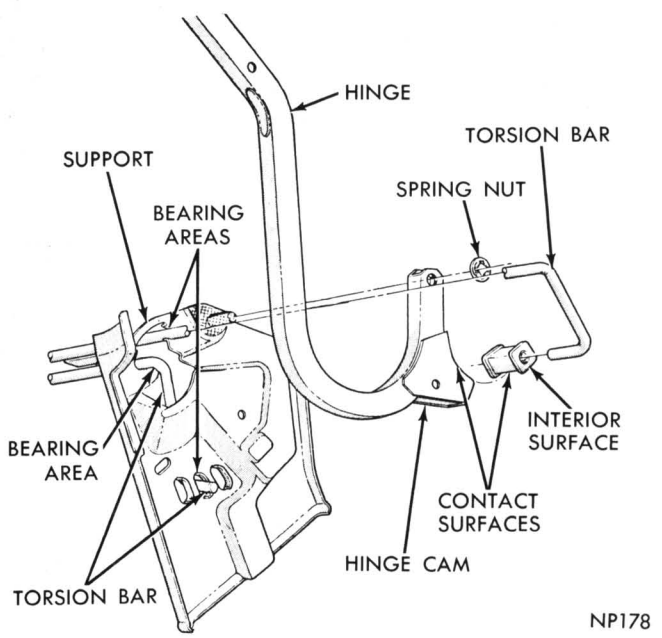

Fig. 74—Deck Lid Hinge Lubrication (Satellite Models)

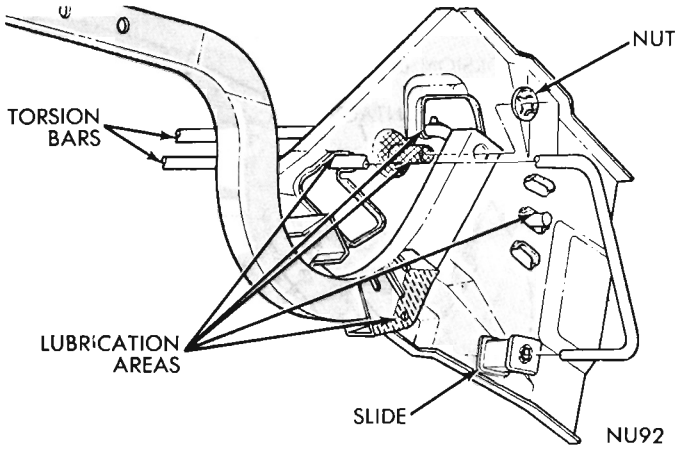

Fig. 75—Deck Lid Hinge Lubrication (Fury Models)

pivot pins and to the check strap and link pivot bolts (Fig. 76). Lubricate check strap, link and torsion bar contact areas with Multi-Purpose NLGI grade 2, EP or Multi-Mileage Lubriplate, Part Number 2525035.

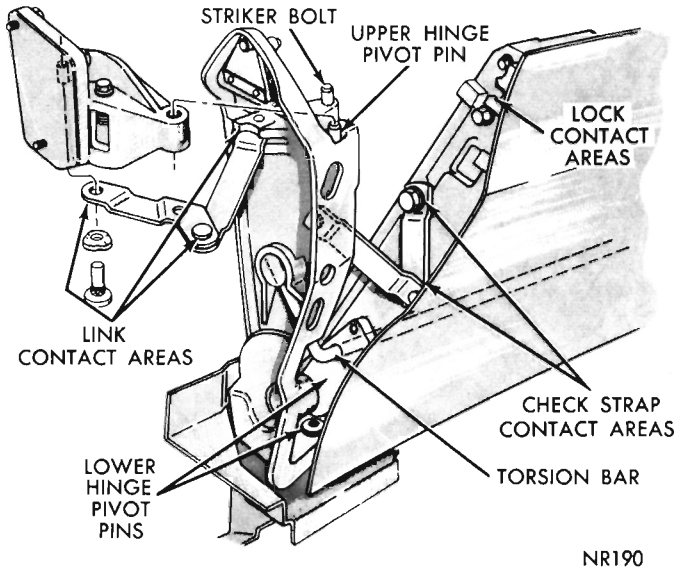

Fig. 76—Tail Gate—Door Lubrication (Satellite Models)

Tail Gate—Door Lubrication (Fury Models)

Apply engine oil sparingly to upper and lower hinge pivot pins, lower support pivot area, check strap and link pivot bolts (Fig. 77). Lubricate torsion bar contact

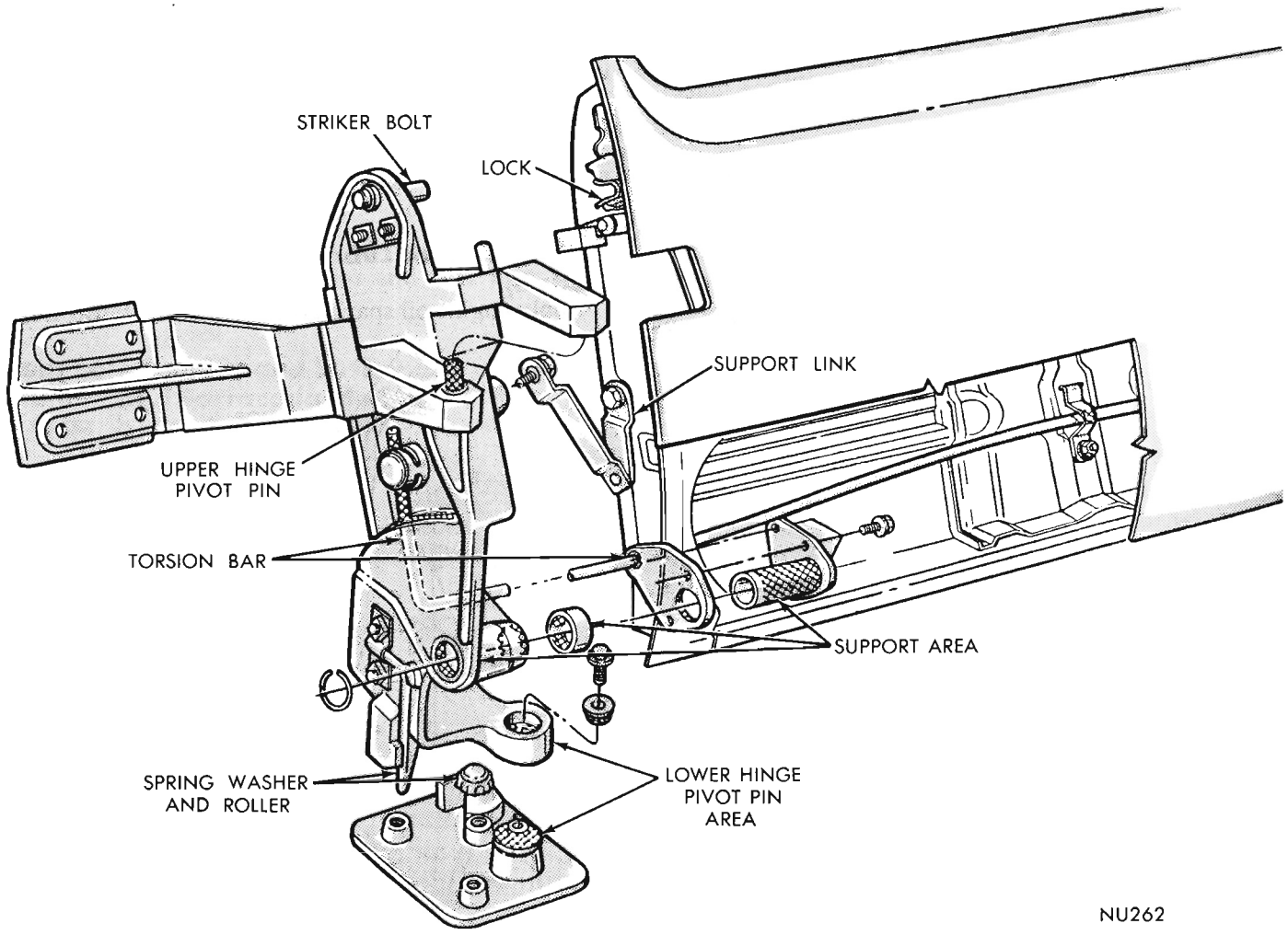

Fig. 77—Tail Gate—Door Lubrication (Fury)

areas with Multi-Purpose NLGI Grade 2 EP or Multi-Mileage Lubricant part number 2525035. Lubricate all inner pivot or sliding contact surfaces of the tail gate and door lock with Lubriplate through access holes on outer edges of panel. Apply stainless wax lubricant such as Door Ease part number 774512 on all lock contact surfaces.

Tail Gate Window Wiper Linkage (All Models)

To lubricate this linkage, remove tail gate trim panel. Apply Lubriplate, sparingly, to the sliding contact areas between the actuater arm and pin, and between the actuating arm and regular sector gear.

Caution—Do not contaminate wiper blades with lubricant.

Fuel Tank Access Door Hinge Lubrication (Fury Station Wagon Models)

Apply Multi-Purpose Lubricant, NLGI grade 2 EP, or Multi-Mileage Lubricant, Part Number 2525035, sparingly, to all pivot areas and to spring end contact areas (Fig. 78).

License Plate Bracket Hinge, Spring and Pin Lubrication Points (Fury Models except Station Wagons)

Apply Multi-Purpose Lubricant, NLGI grade 2 EP, or Multi-Mileage Lubricant, Part Number 2525035, sparingly, to all pivot areas.

THROTTLE LINKAGES

Every 12 months throttle linkage should be lubricated with Multi-Purpose Grease, NLGI grade 2 EP, or Multi-Mileage Lubricant, Part Number 2525035, as described in the following paragraphs. **Do not lubricate ball joints.**

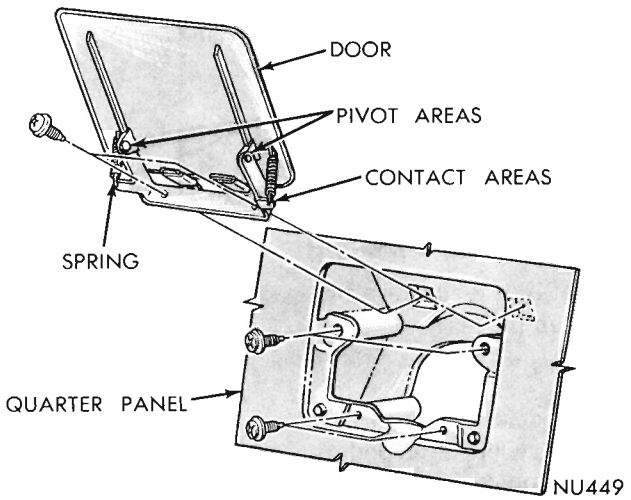

Fig. 78—Fuel Tank Access Door Hinge (Fury Station Wagon)

All 6-Cylinder Models

On models with manual and automatic transmissions, apply a thin film of the prescribed lubricant on both ends of the accelerator shaft where it turns in the bracket and on models where it turns in the bracket with anti-rattle spring (Fig. 79).

On models with automatic transmission, also, apply a film of the same lubricant to the engine mounted bellcrank pin.

In the passenger compartment, apply a thin film of the prescribed lubricant to the accelerator pedal pivot pin, cable ball end and in the pocket in the accelerator shaft lever (Fig. 79). Be sure plug is in place in lever.

Valiant, Barracuda Models (8 Cylinder Engines)

On models with manual and automatic transmissions, apply a thin film of the prescribed lubricant on both ends of the accelerator shaft where it turns in the bracket and where it is contacted by the anti-rattle spring (Figs. 80 and 84).

On models with automatic transmission, also, apply a film of the same lubricant to the pivot points of both upper and lower transmission linkage bellcranks.

In the passenger compartment, apply a thin film of the prescribed lubricant to the accelerator pedal pivot pin, cable ball end and in the pocket in the accelerator shaft lever (Fig. 84). Be sure plug is in place.

Satellite Models (273, 318 Cu. In. Engines)

On models with manual and automatic transmissions, apply a thin film of the prescribed lubricant to the accelerator shaft where it turns in the bracket (Fig. 81).

On models with automatic transmission, apply a thin film of the same lubricant to the pivot points of both upper and lower transmission linkage bellcranks.

In the passenger compartment, apply a thin film of the prescribed lubricant to the accelerator cable ball end and in the pocket in the accelerator shaft lever (Fig. 81). Be sure plug is in place in lever.

Satellite Models, 383, 426 and 440 Cu. In. Engines

On models with manual and automatic transmissions apply a thin film of the prescribed lubricant to the accelerator shaft where it turns in the bracket (Fig. 82).

On models with automatic transmission, also, apply a film of the same lubricant to the pivot points of both upper and lower transmission linkage bellcranks.

In the passenger compartment, apply a thin film of the prescribed lubricant to the accelerator pedal pivot

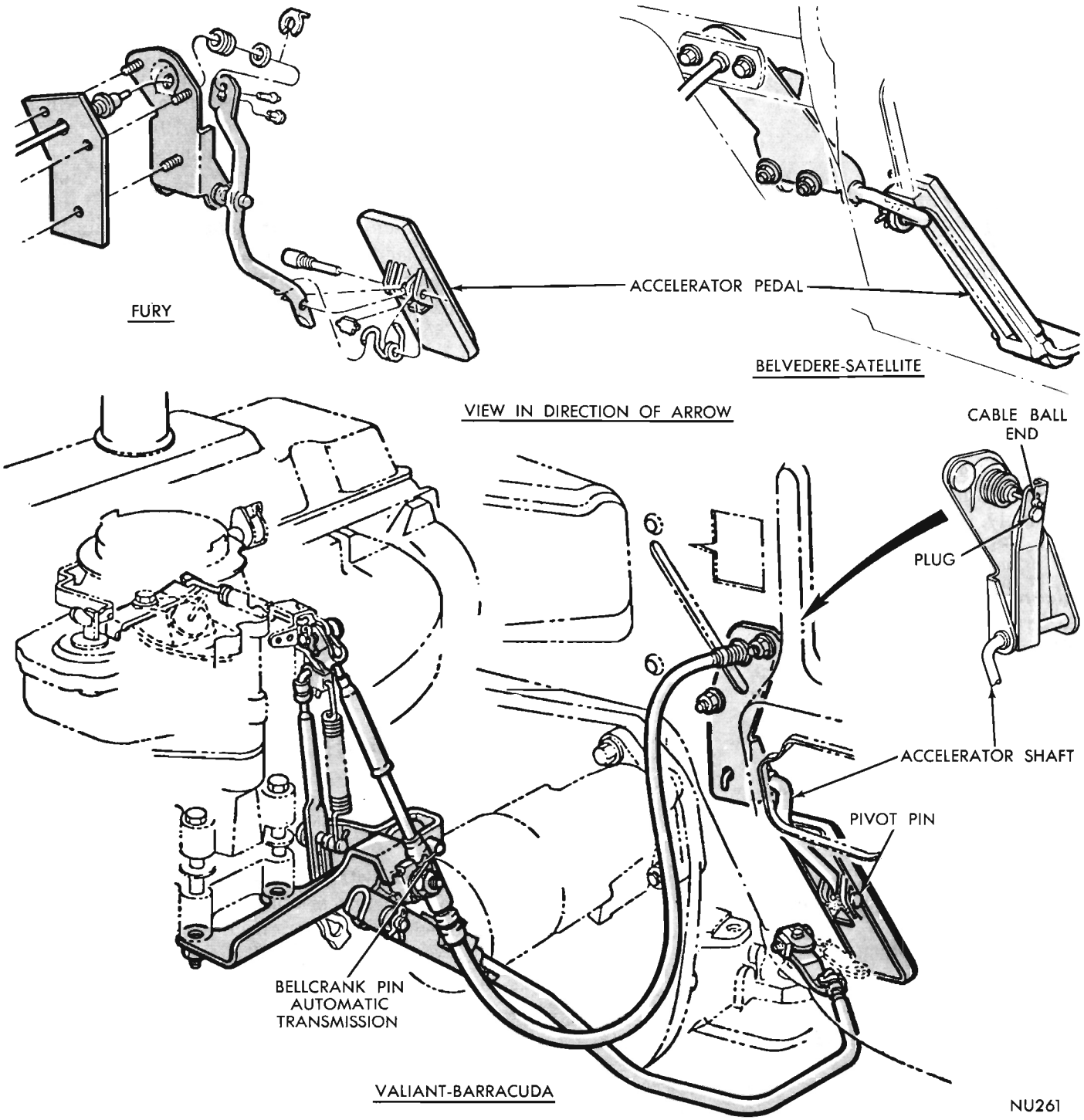

Fig. 79—Throttle Linkage Lubrication (6 Cylinder Models)

pin, cable ball end and in the pocket in the accelerator shaft lever (Fig. 82). Be sure plug is in place.

Fury 8 Cyl. Models

Apply a thin film of the prescribed lubricant to accelerator linkage bearing areas, the accelerator pedal pivot pin, cable ball end and in the pocket in the accelerator shaft lever (Fig. 83). Be sure plug is in place in lever.

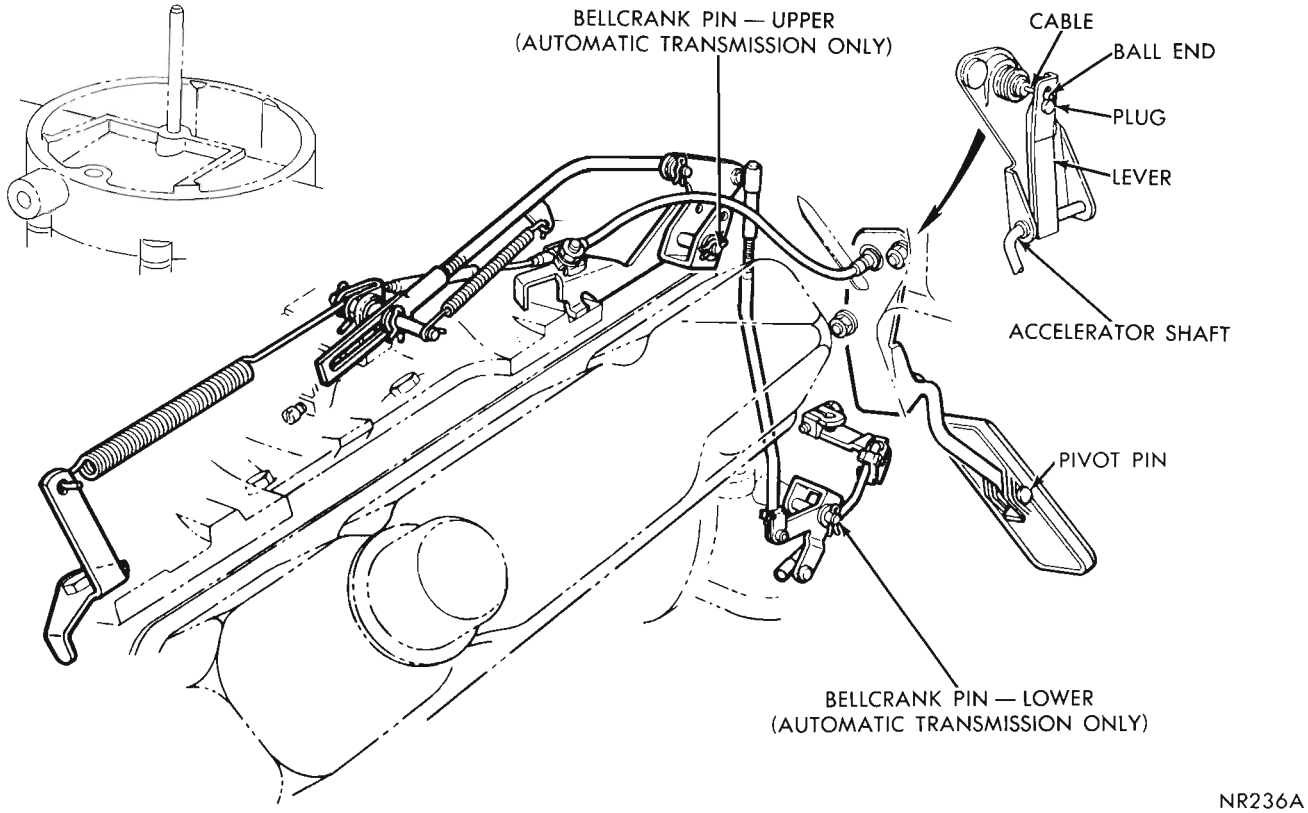

Fig. 80—Throttle Linkage—Barracuda (383 Cu. In. Engine)

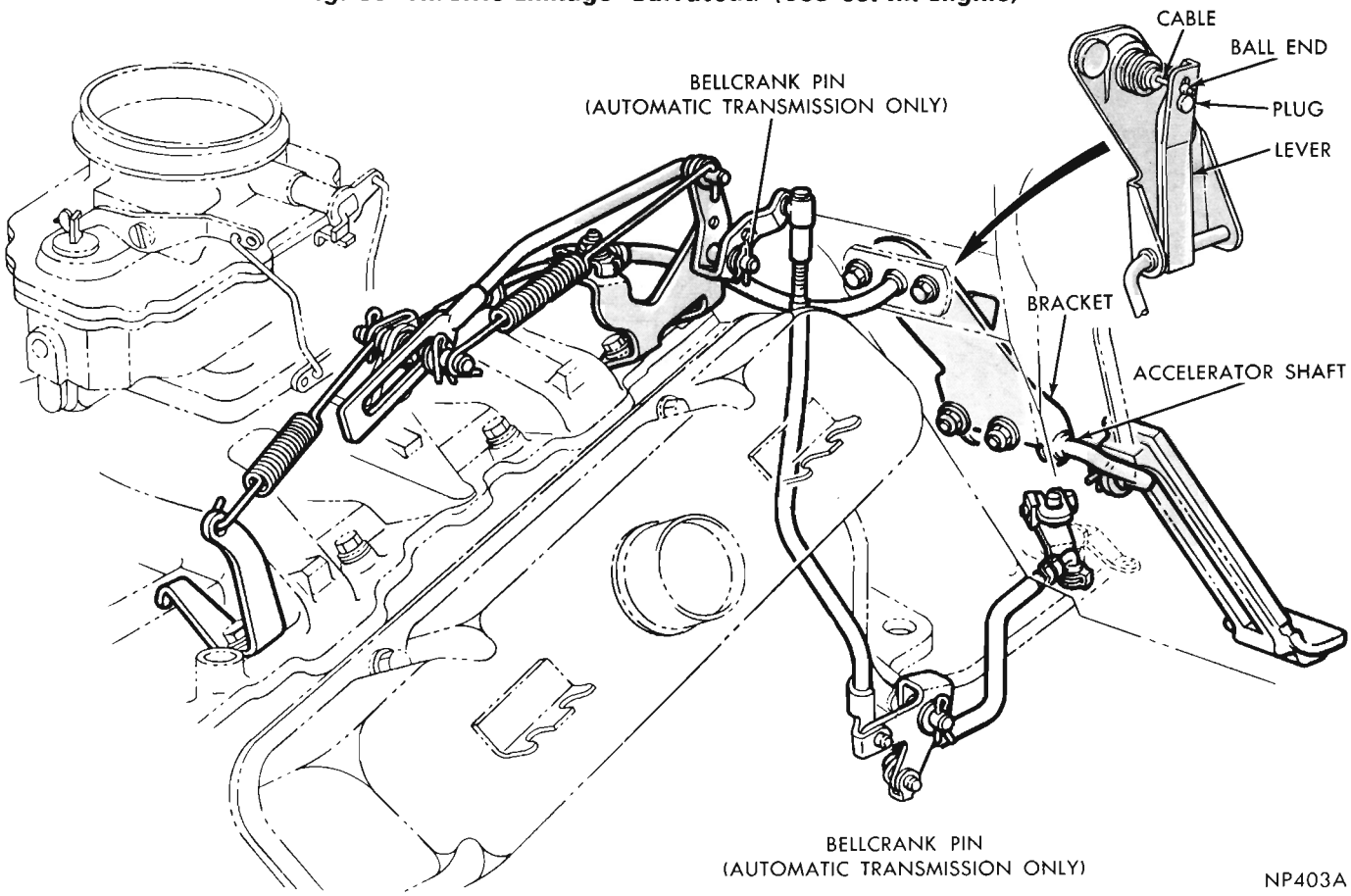

Fig. 81—Throttle Linkage Lubrication (Satellite 273, 318 Cu. In. Engines)

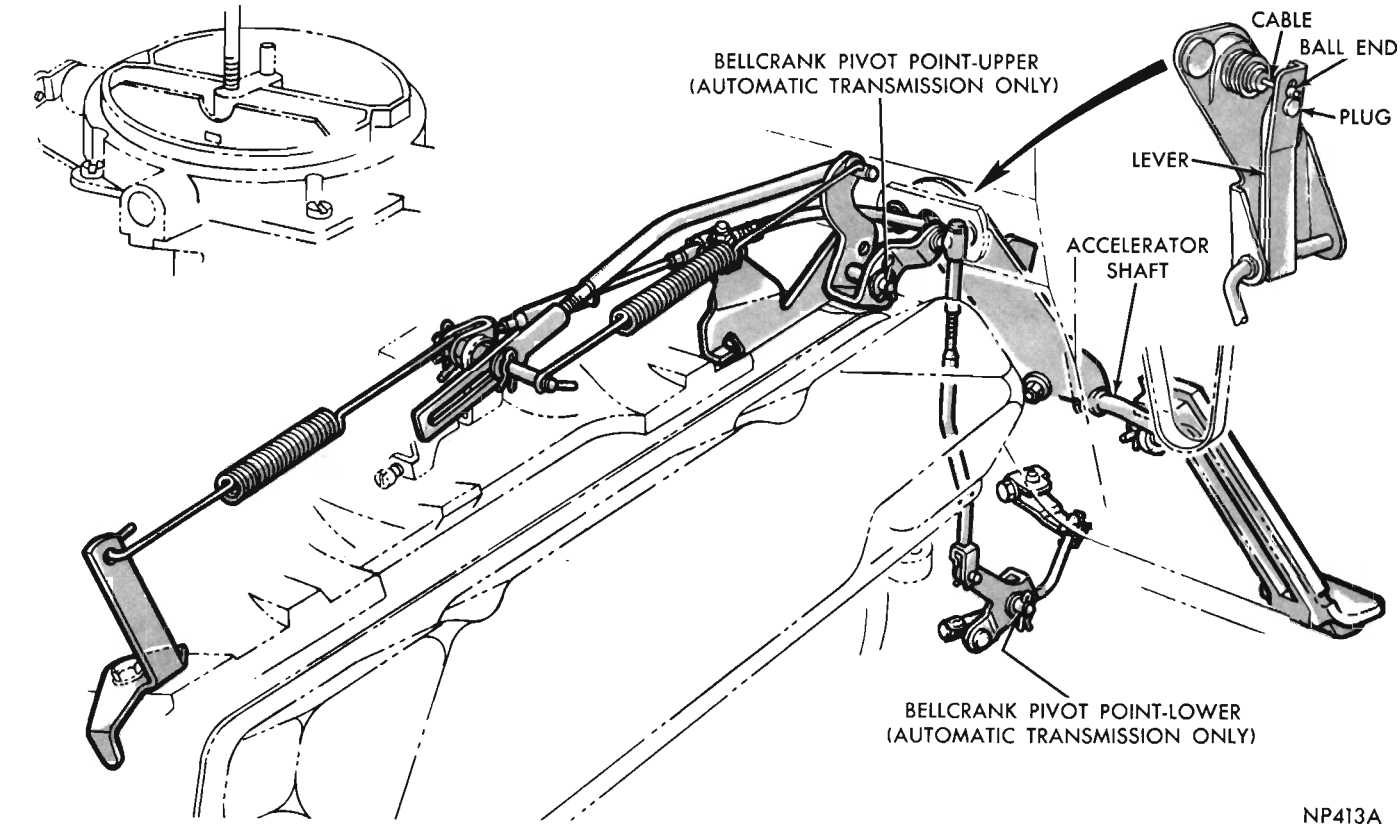

Fig. 82—Throttle Linkage Lubrication (Satellite 383, 426, 440 Cu. In. Engines)

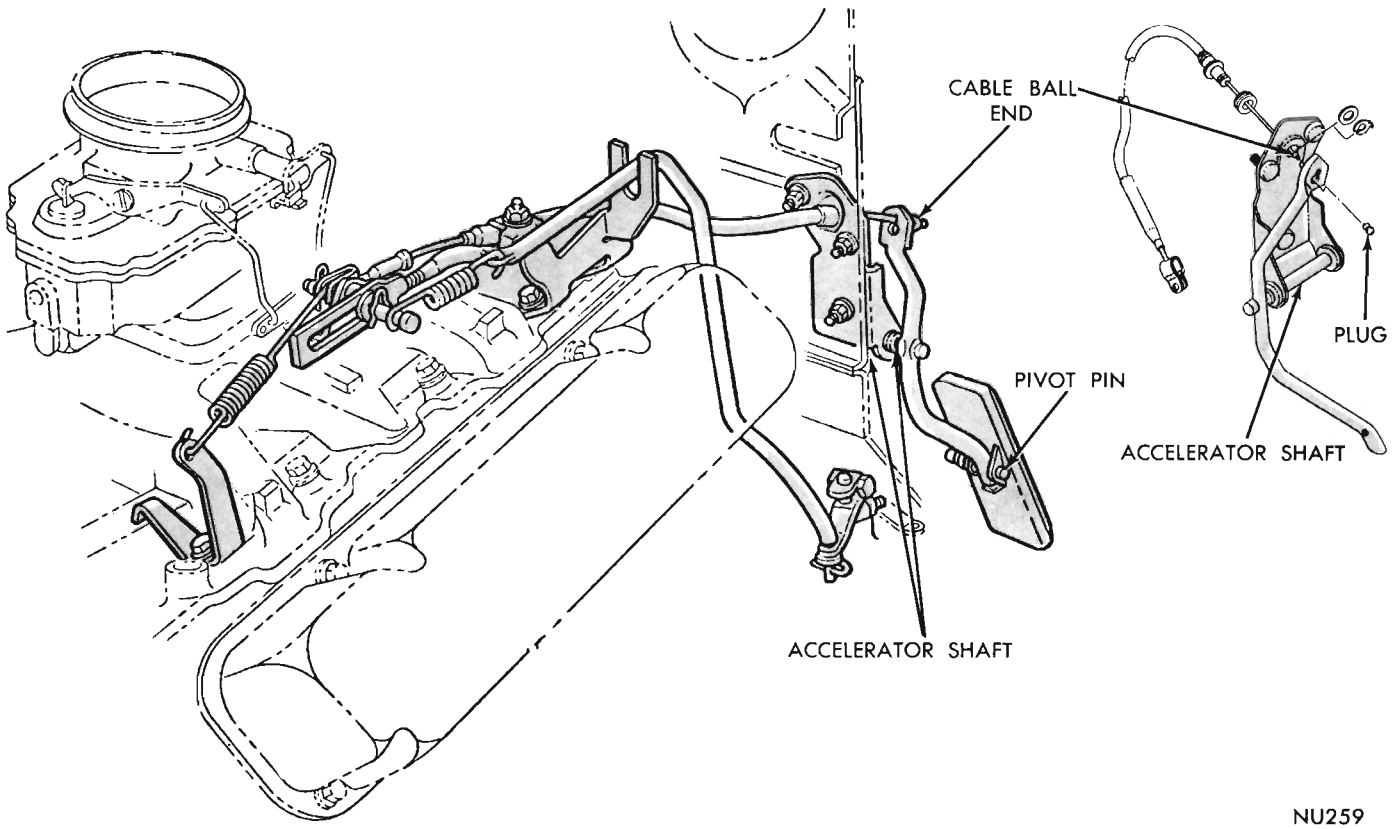

Fig. 83—Throttle Linkage Lubrication (Fury 8 Cylinder)

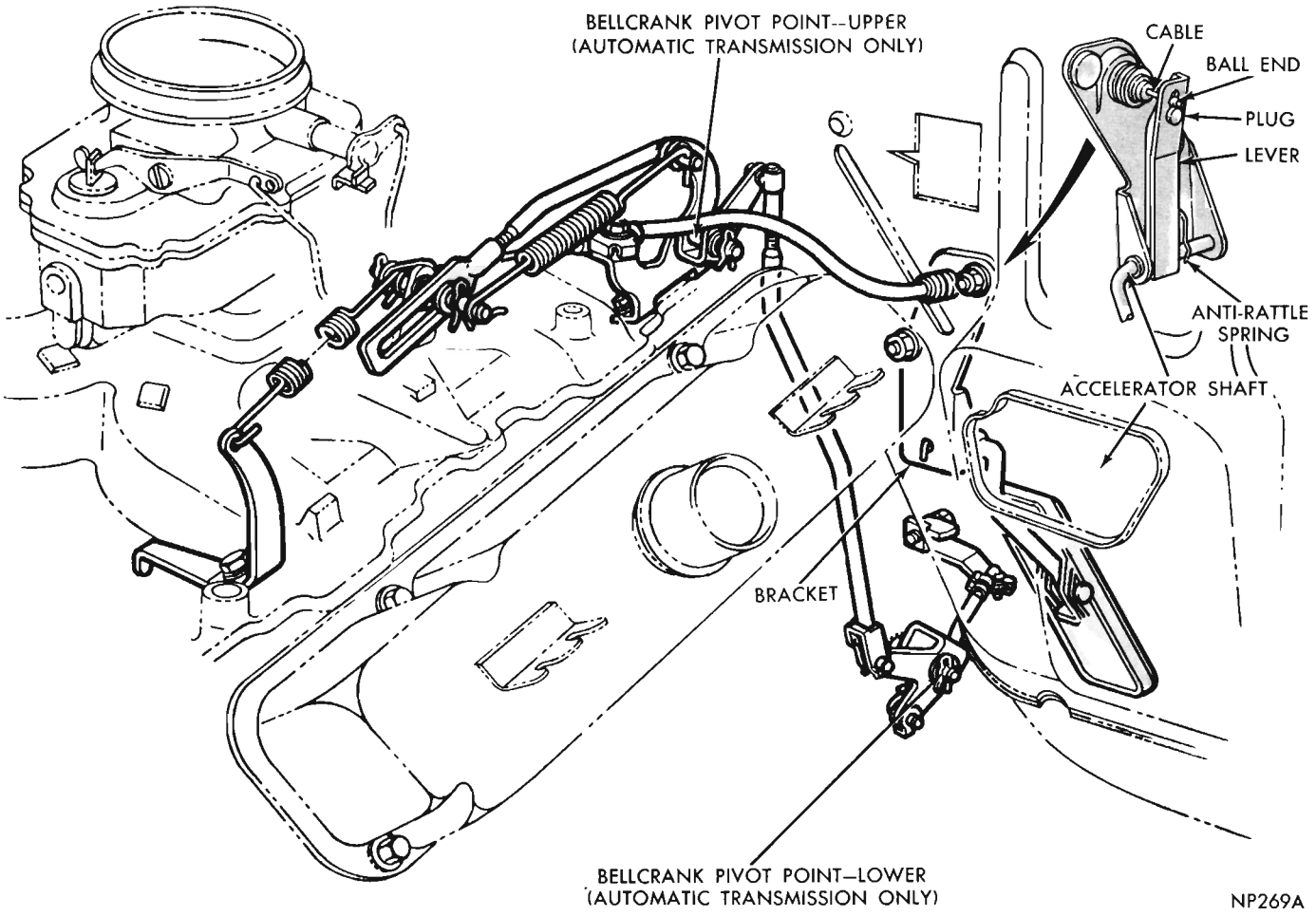

Fig. 84—Throttle Linkage Lubrication (Valiant and Barracuda 273, 318, 340 Cu. In. Engines)

PARTS REQUIRING NO LUBRICATION

There are many points that should not be lubricated, some because they are permanently lubricated, some because lubricants will be detrimental to their operating characteristics, and some because lubricants will cause component failures. In any event, rubber bushings should not be lubricated, not only because lubricants will cause rubber to fail, but also will destroy their necessary friction characteristics. The following parts should not be lubricated.

All Rubber Bushings
Alternator Bearings
Automatic Transmission Controls and Linkage
Carburetor Air Cleaner (Paper Element Type)
Clutch Pedal Push Rod Ends
Clutch Release Bearing
Drive Belts
Fan Belt Idler Pulley
Rear Springs
Rear Wheel Bearings
Starting Motor Bushings
Throttle Linkage Ball Joints
Upper and Lower Control Arm Bushings
Water Pump Bearings

ACCESSORIES

CONTENTS

	Page		Page
DEFOGGER	1	SPEED CONTROL	9
ELECTRIC CLOCK	1	TAIL GATE WIPER WASHER SYSTEM	16
RADIO AND ANTENNA	2		

ELECTRIC CLOCK

GENERAL INFORMATION

The electric clocks have a self-regulating mechanism for automatically correcting time gain or lag when the hands are reset to the correct time. Clocks should be reset as follows:

(1) If the clock runs fast, pull the time set shaft out and reset the hands in a "counterclockwise" direction to the correct time. Push in the time set shaft.

(2) If the clock runs slow, pull the time set shaft out and reset the hands in a "clockwise" direction to the correct time. Push in the time set shaft.

(3) Repeat steps (1) and/or (2) frequently for several days until the correct rate of time is achieved.

SERVICE DIAGNOSIS

Condition	Possible Cause	Correction
CLOCK DOES NOT OPERATE	(a) Wire loose or off terminal.	(a) Install connector on terminal.
	(b) Internal short.	(b) Repair or replace the clock as necessary.
	(c) Faulty ground.	(c) Tighten clock retaining screws on cluster housing and/or cluster.

SERVICE PROCEDURES

CLOCK

Removal—Barracuda

(1) Remove instrument cluster; See "Group 8"—"Electrical—Cluster Removal".

(2) Remove clock from cluster (three screws).

Installation—Barracuda

(1) Position clock in cluster and install three mounting screws.

(2) Install instrument cluster; See "Group 8"—"Electrical—Cluster Installation".

Removal—Belvedere, Satellite

(1) Remove clock reset knob from front of instrument panel.

(2) From under the instrument panel, remove the wiring connector from clock terminal, the three screws mounting the clock to the cluster and remove the clock.

Installation—Belvedere, Satellite

(1) From under the instrument panel position clock, install mounting screws and clock wiring connector.

(2) Install the clock reset at front of instrument panel and check operation of clock.

Removal—Fury—VIP

(1) Remove air conditioner distribution ducts on lower left side of instrument panel, (units so equipped).

(2) Remove clock reset knob.

(3) From under instrument panel, disconnect electrical lead, remove two clock mounting screws.

(4) Carefully remove clock from under panel.

Installation—Fury—VIP

(1) Working under instrument panel carefully install clock and clock mounting screws.

(2) Connect electrical lead at clock terminal.

(3) Install air condition distribution ducts.

(4) Install clock reset knob.

REAR WINDOW DEFOGGER

To service the blower motor or fan, the assembly must be removed from the shelf panel from inside the luggage compartment.

After disconnecting the outlet hose and wire connector, remove the mounting screws from the mounting clips and remove the assembly from the vehicle for service.

Disassembly

(1) Remove the blower motor adapter plate to housing mounting screws and withdraw motor and fan assembly from housing.

(2) Loosen fan set screw on fan hub and slide fan from motor shaft.

(3) Remove the motor adapter plate mounting nuts and separate motor from plate.

Assembly

(1) Position adapter plate on motor studs and install the mounting nuts.

(2) Install fan on motor shaft and insert assembly in housing. Check fan to housing clearance and adjust if necessary.

(3) Install the blower motor adapter plate to housing mounting screws.

RADIO AND ANTENNA

INDEX

	Page
Antennas	5
Antenna Trimming	4
General Information	2
Fader Control	3
Front Speaker	7
Interference Elimination	4
Radios	2
Rear Seat Speakers	9
Service Diagnosis	3
Stereo Speakers	8

RADIO—AM Pushbuttons and Thumbwheels (Optional)—Valiant, Barracuda, Belvedere, and Satellite

To operate the radio, the ignition switch may be in the "On" or "Accessory" position. Operating controls consists of four thumbwheels and five push buttons. The left thumbwheel turns on the radio and controls the volume. Stations are selected by the push buttons or center thumbwheel. The right thumbwheel controls tone quality.

Push Button FM/AM (Optional)—Belvedere and Satellite

Operating controls consist of four thumbwheels.

Left outside—On-Off and Volume
Left inside—Station Selection
Right inside—Tone Quality
Right outside—FM and AM Selector

Push buttons may be set for either FM or AM stations.

Combination A/M Radio and Stereo Tape Player (Optional) Thumbwheels (No Pushbuttons)—Belvedere—Satellite

The operating controls consists of four thumbwheels and a selector button. The left outside thumbwheel turns on the radio and controls the volume. The left inside thumbwheel is for station selection. The right inside thumbwheel controls tone quality. The right outside thumbwheel controls balance between the left and right channel. At mid-rotation a detent is provided as a reference point to obtain approximately equal output from each channel.

The four program - eight-track stereo tape player provides full stereo reproduction.

To operate, insert the tape cartridge, label side up, into the tape chamber. The door will swing inward and the tape player will begin to play when the cartridge is in position. The tape player unit will play all four programs automatically and in sequence unless manually changed.

Depressing the channel selector push button will manually override the automatic sequence of the tape player and allow the driver to change programs at will.

RADIO—Push Button AM (Optional)—Fury and VIP

To operate the radio, the ignition may be in the "on" or "Accessory" position. Operating controls consist of three thumbwheels and five push buttons.

Left Outside Thumbwheel—On-Off and Volume
Center Thumbwheel—Tone Control
Right Outside Thumbwheel or Push Buttons—Station Selection

AM RADIO WITH STEREO TAPE PLAYER (Thumbwheels and Push Buttons)—Fury and VIP Models (Optional)

The operating controls consist of four thumbwheels, five push buttons and a selector button.

Left Inside Thumbwheel—Balance
Left Outside Thumbwheel—On-Off and Volume
Right Inside Thumbwheel—Tone Quality
Right Outside Thumbwheel—Station Selection
Push Buttons—Station Selection

To operate tape player insert the tape cartridge, label side up, into opening provided. The door will swing inward and the tape player will play when the cartridge is in position.

To advance the tape, a selection at a time, depress the selector button located to the left of the radio dial.

Do not store tape cartridges in high temperature areas, such as on top of the instrument panel or the rear package shelf.

AM/FM MULTIPLEX—Fury and VIP Models (Optional)

Operating controls consist of four thumbwheels, five push buttons and AM/FM selector switch.

Left Outside Thumbwheel—On-Off and Volume
Left Inside Thumbwheel—Balance
Right Inside Thumbwheel—Tone Quality
Right Outside Thumbwheel—Station Selection

Tape Cartridge

(1) Stereophonic tape players are designed to use a pre-recorded, four program (eight-track) stereophonic tape combined in a special tape cartridge. **Do Not Use Four-Track Cartridges.**

(2) Protect open end of the cartridge from damage, dirt, water, oil, grease, etc.

(3) Do not attempt to pull out the tape from the cartridge.

(4) Do not attempt to open up the cartridge.

(5) To assure maximum life, tape cartridges should be stored in a **cool, clean** and **dry** place, with the open (tape) end down to keep dust out of the cartridge.

(6) Do not expose cartridge to direct sunlight or other temperature extremes.

(7) Remove or disengage cartridge approximately one inch when not in use.

(8) Do not turn on tape player with the cartridge engaged.

PLAYBACK HEAD AND CAPSTAN CLEANING

The playback head and capstan in your tape player may accumulate tape coating residue (oxide) as the tape passes over the head. This accumulation should be periodically removed, as part of normal maintenance. Clean the playback head with a cotton swab, slightly moistened with alcohol while holding the player cartridge door open. To clean the capstan, hold the player cartridge door open and swab the surface of the capstan with alcohol after depressing the tape player motor switch (copper plate next to the capstan) with a pencil. **Do not use carbon tetrachloride.** Dry parts with a clean rag.

Fader Control

The speaker fader control, located remotely from the stereo unit, serves to proportion the sound level between the front and rear speakers.

SERVICE DIAGNOSIS

Condition	Possible Cause	Correction
RADIO INOPERATIVE	(a) Blown fuse.	(a) Replace fuse, check for short or open in wiring harness.
	(b) Antenna open or shorted.	(b) Test with an auxiliary antenna with lead-in plugged into the receiver set and test antenna head outside of car. If radio plays with test antenna, use original antenna and check antenna mostly for shorts to ground while rocking antenna slightly. Unplug antenna lead from radio and use ohmmeter to check from center contact of antenna to outside of case. If reading on ohmmeter is less than 500,000 ohms, replace antenna.
	(c) Receiver or Speaker connections loose or faulty.	(c) Test the voltage of the fuse and tighten all connections. With speaker control tuned to either stop, rotate control to other stop. If radio plays, replace faulty speaker. If radio does not play, remove radio receiver for servicing.
RADIO RECEPTION WEAK	(a) Unbalanced antenna trimmer.	(a) Carefully adjust the antenna trimmer. See "Service Procedures".
	(b) Shorted antenna lead-in.	(b) Turn on radio and wiggle antenna. If speaker static is heard, check for antenna mounting tightness. If speaker static is still heard after tightening, disassemble antenna and test for faulty insulators or presence of moisture. Make an ohmmeter check step (b) under "Radio Inoperative". If no static is heard, test for faulty or loose receiver or antenna connections at re-

Condition	Possible Cause	Correction
		ceiver. Also check antenna lead-in at antenna. If antenna checks OK, remove radio receiver for servicing.
RADIO NOISY	(a) Outside electrical interferences.	(a) Move the car or eliminate interference.
	(b) Insufficient or faulty interference suppression.	(b) Install effective capacitor in ignition system or voltage limiter.
	(c) Faulty antenna.	(c) Turn on radio and wiggle antenna lead and listen for speaker static. If static is heard, disassemble antenna and check for faulty insulators or presence of moisture. Make an ohmmeter test, Step (b) "Radio Inoperative". If no static is heard, check for a loose or faulty capacitor. If capacitor is OK, remove antenna plug from radio receiver and bump receiver with heel of hand. If no static is heard, start engine, turn on headlights and slowly accelerate engine speed. If a whining noise is heard, turn off headlights, and if whining noise is still present check alternator for burned out diodes and voltage regulator setting. If OK, remove radio receiver for servicing.
RADIO RECEPTION DISTORTED	(a) Speaker voice coil leads rubbing on speaker cone.	(a) Install an auxiliary speaker and compare. Replace if improved.
	(b) Torn speaker cone.	(b) Replace the speaker.
	(c) Faulty radio.	(c) Send radio to authorized radio service station for repair.
	(d) Foreign material in speaker.	(d) Clean or replace speaker.
INTERMITTENT RECEPTION	(a) Broken or shorted antenna lead-in wire.	(a) Test with a substitute antenna and replace if necessary.
	(b) Faulty radio.	(b) Send radio to authorized radio service station for repair.

SERVICE PROCEDURES

ANTENNA TRIMMING

All radios are trimmed at the factory and should require no further trimmer adjustment. However, whenever a radio is being installed after repair, or if verification of trimmer adjustment is desired, proceed as follows:

(1) Operate radio for 15 mintes.

(2) Extend antenna to 40 inches.

(3) Manually tune radio to a weak signal between 1400 and 1600 kilocycles.

(4) Increase radio volume to full volume and set tone control to maximum treble (fully clockwise).

(5) The trimmer screw is located at the rear lower right hand corner of the radio and can be reached by inserting a screwdriver into the trimmer screw access hole.

Adjust antenna trimmer by carefully turning back and forth until position is found that gives peak response in volume. Maximum output indicates proper point of antenna trimmer adjustment.

Push Button Adjustment

(1) Extend antenna fully and turn radio on for fifteen minutes.

(2) Unlock push button by pulling out.

(3) Manually tune in desired station and relock push button by pushing all the way in.

(4) Repeat operation on other push buttons as necessary.

FM radio push button adjustment is the same as standard AM radio. It should be noted that push button adjustment is only good for one station either (AM or FM) not both at the same time.

INTERFERENCE ELIMINATION

Three capacitors are used to suppress engine electrical interference. The alternator is equipped with an internal capacitor integral with the output stud.

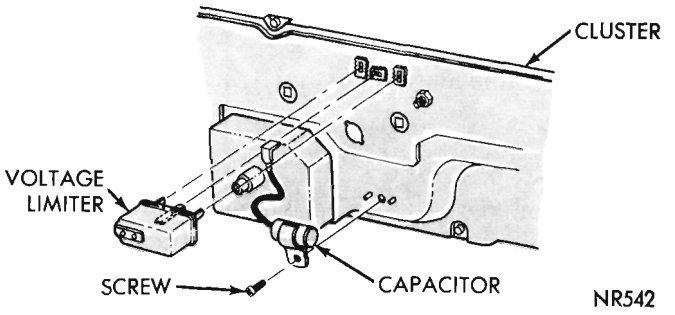

Fig. 1—Radio Interference Capacitor To Cluster Installation—Valiant

A second capacitor is mounted on the back of the instrument cluster with a self tapping screw (Figs. 1 through 4). The lead wire of this capacitor is connected to the input terminal of the voltage limiter on all models except Barracuda. The Barracuda has the capacitor connected direct to the 12 volt stud of the fuel gauge. See Figure 4 for proper installation for the Fury and VIP models.

A third capacitor is installed on the ignition coil with the lead connected to the positive primary terminal of the coil (Fig. 5). Radio resistance type wires in the high tension circuit of the ignition system complete the interference suppression.

If radio noises are evident, be sure the capacitor lead wires are making good contact on their respective terminals and are securely mounted. Faulty or deteriorated spark plug wires should be replaced.

ANTENNAS

Removal—All Models

(1) Unplug antenna lead from radio receiver.

(2) Remove antenna by unscrewing from antenna body (Fig. 6).

(3) Remove capnut (Fig. 7).

(4) Remove the antenna snap-on fender adapter and gasket.

(5) From under fender remove the lower adapter mounting collar and antenna lead.

Installation—All Models

(1) Assemble mounting collar to antenna body (if removed).

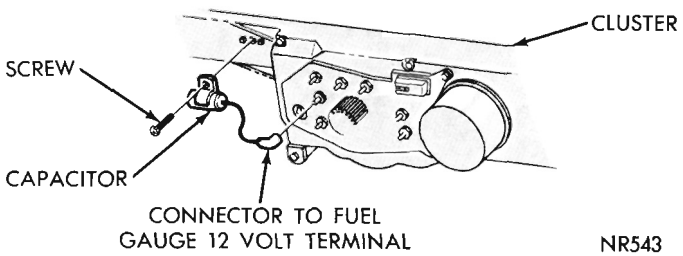

Fig. 2—Radio Interference Capacitor To Cluster Installation—Barracuda

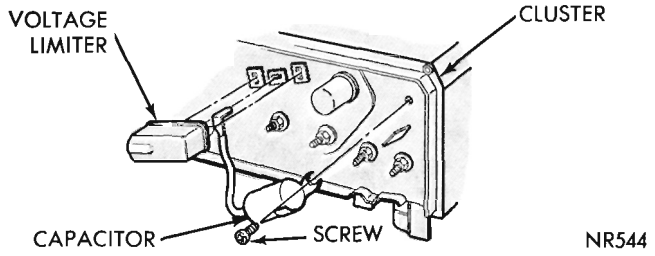

Fig. 3—Radio Interference Capacitor To Cluster Installation—Belvedere and Satellite

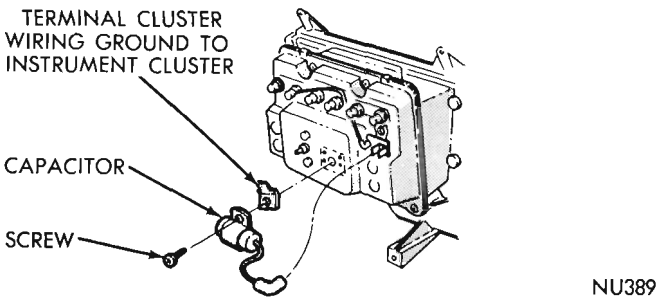

Fig. 4—Radio Interference Capacitor To Cluster Installation—Fury and V.I.P.

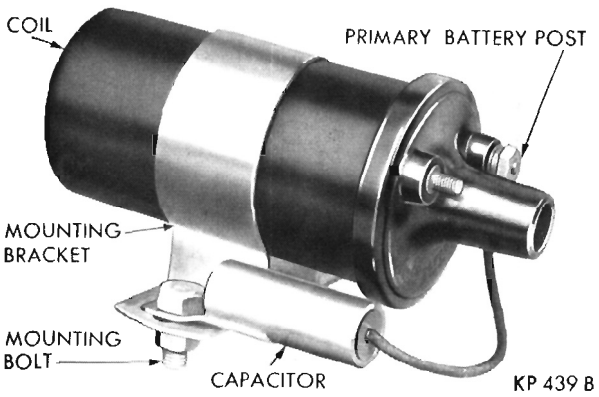

Fig. 5—Ignition Coil Capacitor

(2) Enter antenna body from underneath fender and insert through mounting hole in fender.

(3) Install gasket, adapter and capnut. Tighten capnut to 155 inch-pounds, plus or minus 25 inch-pounds with Tool C-4085 (Fig. 8).

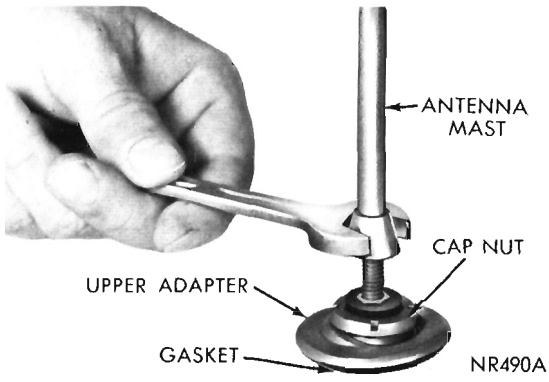

Fig. 6—Antenna Installation—All Models

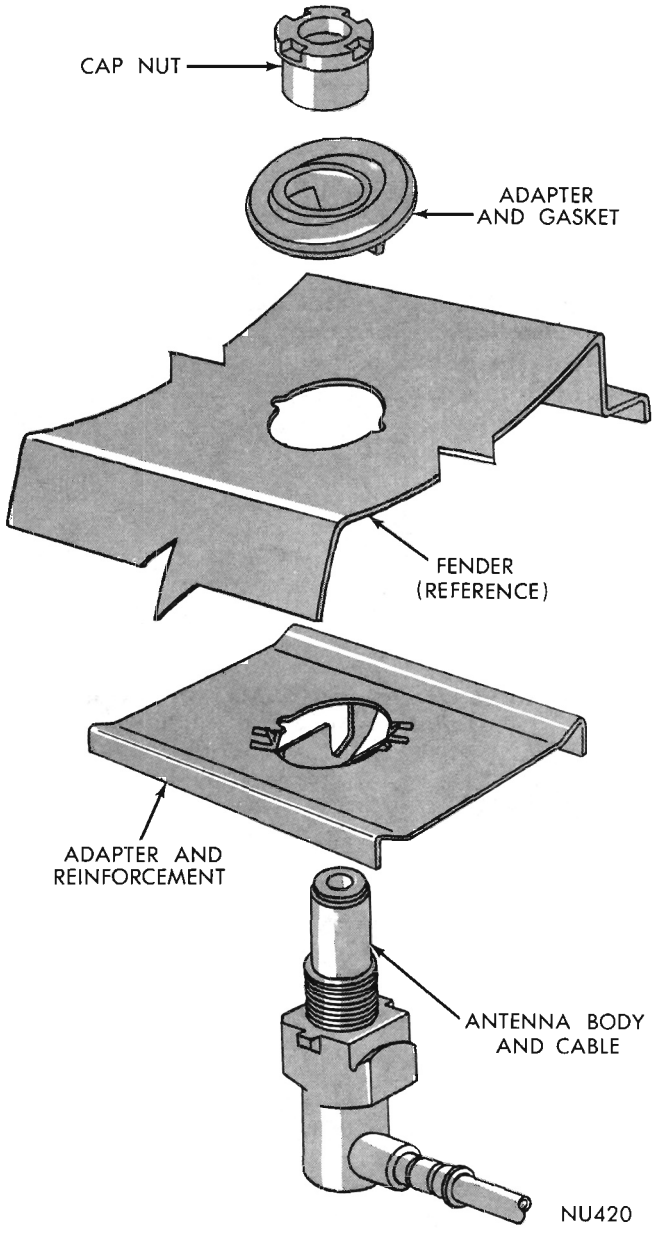

Fig. 7—Antenna Disassembled—All Models

(4) Install antenna mast into antenna body until sleeve bottoms on antenna body.

(5) Reroute antenna lead as shown in Figure 9 on Fury and V.I.P. models. On Valiant, Barracuda, Belvedere and Satellite models, antenna lead is routed through cowl side panel and over top of glove box to radio receiver (Fig. 10).

RADIOS

Caution: Do not operate the radio with speaker leads detached since damage to the transistors may result.

Removal—Valiant and Barracuda Models

(1) Disconnect battery ground cable.

(2) From under panel, disconnect speaker and wiring leads at radio.

(3) Remove two radio mounting nuts from radio mounting bracket.

(4) Move radio down and out from under instrument panel.

Installation

(1) Position radio under instrument panel and install the radio mounting bracket and attaching nuts.

(2) Connect speaker and antenna leads.

(3) Connect battery ground cable and test operation of radio.

Removal—Belvedere and Satellite Models

(1) Disconnect battery ground cable.

(2) Remove radio trim panel.

(3) Remove radio finish plate.

(4) From under panel disconnect wiring and antenna leads.

(5) Remove radio rear mounting nut from mounting bracket.

(6) While supporting radio remove the two mounting screws from front of instrument panel, then remove radio from under panel.

Installation

(1) From under panel, position radio in panel opening and install the two mounting screws.

(2) Install radio mounting bracket nut and tighten securely.

(3) Connect electrical wiring and antenna leads.

(4) Install radio finish plate and radio upper trim panel.

(5) Connect battery ground cable and test radio operation.

Removal—Fury and V.I.P. Models

(1) Disconnect battery ground cable.

(2) Remove nine lamp panel mounting screws, lower lamp panel assembly slightly, disconnect lamp harness from main harness and remove lamp panel from instrument panel.

(3) Remove steering column cover (seven screws).

(4) Remove radio trim bezel mounting screws and remove bezel; See "Group 8—Electrical".

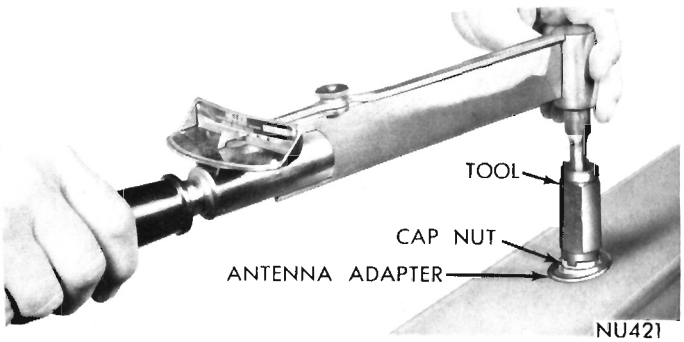

Fig. 8—Tightening Antenna Capnut

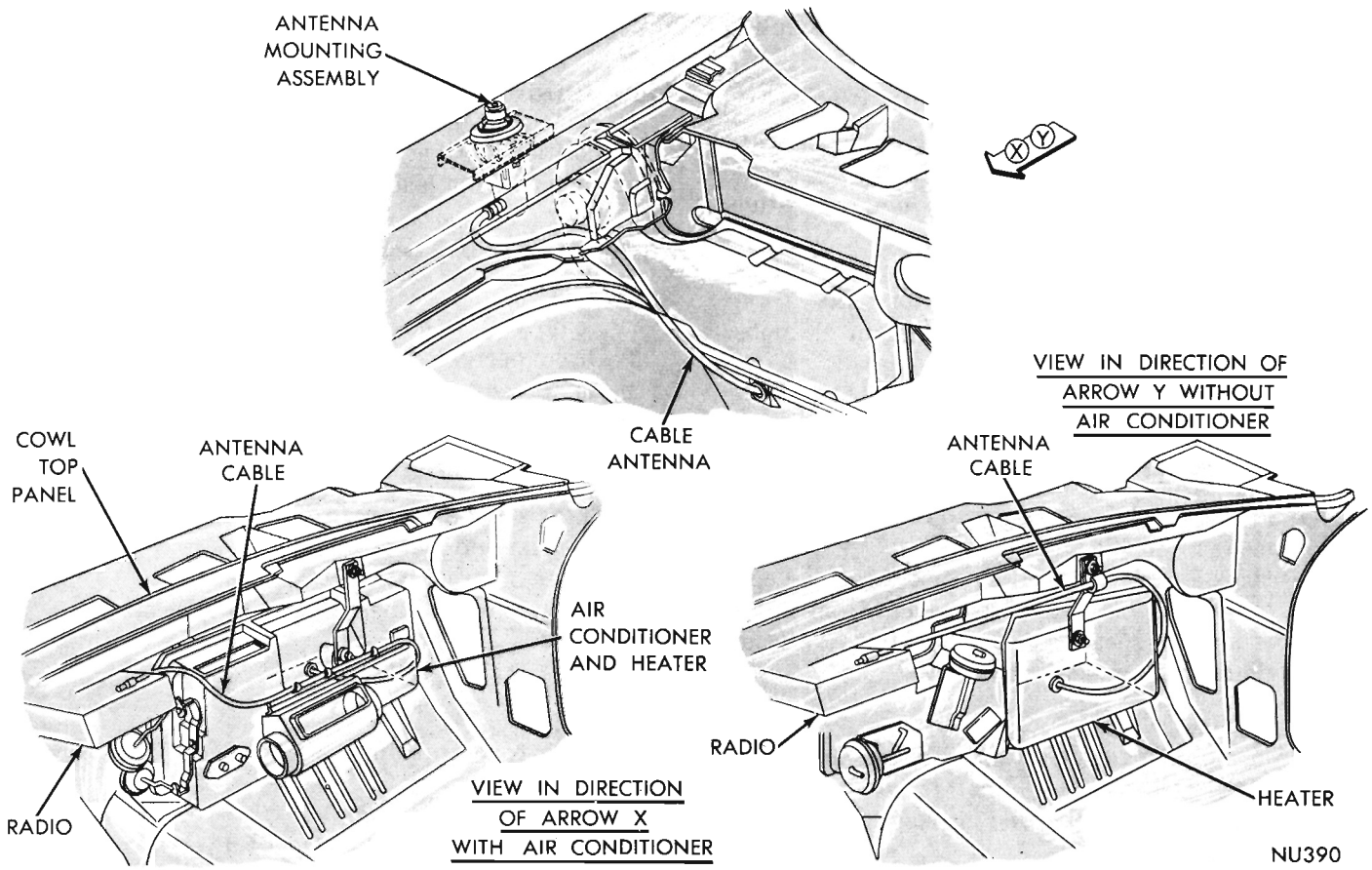

Fig. 9—Antenna Cable Routing—Fury and V.I.P.

(5) Remove center lower air conditioner duct (so equipped).

(6) Disconnect electrical leads and antenna lead at radio.

(7) Remove radio support mounting bracket (one screw).

(8) Remove the two radio mounting bolts.

(9) Remove radio by moving radio down through bottom of instrument panel carefully to avoid damage to vacuum hoses and electrical leads.

Installation—Fury and V.I.P.

(1) Enter radio from under instrument panel and install radio support mounting bracket.

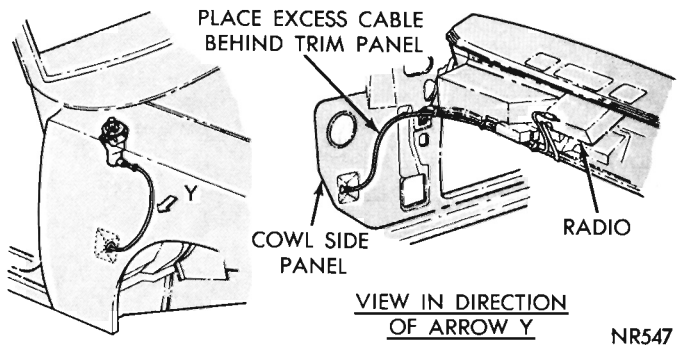

Fig. 10—Antenna Cable Routing—All Except Fury and V.I.P.

(2) Connect electrical leads and antenna lead to radio.

(3) Install center lower air conditioner duct, (so equipped).

(4) Install radio mounting bolts.

(5) Install radio trim bezel; See "Group 8—Electrical".

(6) Install steering column cover.

(7) Install lamp panel assembly.

(8) Connect battery ground cable and test operation of radio.

SPEAKERS

Front Speaker Removal—Valiant and Barracuda Models

(1) Remove radio. See "Radio Removal".

(2) From under panel, remove defroster hoses from nozzles.

(3) Remove knobs from heater controls and remove heater or air conditioning control two retaining nuts from back of panel. Allow control to hang down under instrument panel out of the way. It is not necessary to disconnect control cables.

(4) Working under panel, remove two speaker mounting nuts from studs and carefully work speaker down and out of panel.

(5) Remove speaker adapter plate four mounting screws and separate speaker from plate.

Installation

(1) Mate speaker with adapter plate and secure with four mounting screws.
(2) Position speaker assembly on mounting studs under panel and install mounting nuts.
(3) Install heater or air conditioning control on mounting studs and secure with mounting nuts.
(4) Install heater or air conditioning control knobs.
(5) Install defroster hoses to nozzles.
(6) Install radio. See "Radio Installation".

Front Speaker Removal—Belvedere and Satellite Models

(1) Disconnect battery ground cable.
(2) Remove radio. (See Radio Removal.)
(3) If car is air conditioning equipped, remove center spot cooler hose at distribution duct. From under panel, disconnect speaker leads, remove the four mounting nuts and remove speaker.

Installation

(1) From under panel, position speaker on mounting studs and secure the four nuts.
(2) Connect speaker leads and air conditioning hose if so equipped.
(3) Install radio. (See Radio Installation).
(4) Connect battery ground cable and test operation of radio.

Front Speaker—Fury and V.I.P.

Removal

(1) Disconnect battery ground cable.
(2) Remove air conditioner lower distribution duct at center, (so equipped).
(3) Remove radio mounting bracket.
(4) Disconnect wire leads to speaker.
(5) Remove four speaker mounting nuts and remove speaker from under instrument panel.

Installation

(1) Position speaker under instrument panel and secure with four mounting nuts.
(2) Connect wire leads at speaker.
(3) Install radio mounting bracket.
(4) Install air conditioner lower distribution center duct, (so equipped).
(5) Connect battery ground cable and test operation of radio and speaker.

STEREO SPEAKERS

Right or Left Speaker—Belvedere—Satellite

Removal

(1) Remove the four speaker grille mounting screws.
(2) Disconnect wiring lead and remove speaker.

Installation

(1) Attach speaker grille.
(2) Position speaker and grille on instrument panel and connect wiring lead.

Right Hand—Fury and V.I.P.

Removal

(1) Remove glove box; See "Group 8—Electrical".
(2) Disconnect wire leads.
(3) Remove stereo speaker mounting screws (two).
(4) Remove speaker through glove box opening.

Installation

(1) Enter speaker through glove box opening and install speaker and mounting screws.
(2) Connect wire leads.
(3) Install glove box; See "Group 8 — Electrical".

Left Hand—Fury and V.I.P.

Removal

(1) Remove instrument cluster; See "Group 8—Electrical".
(2) Disconnect wire leads.
(3) Remove stereo speaker mounting screws (two).
(4) Remove speaker through instrument cluster opening.

Installation

1) Enter speaker through cluster opening and install with the two mounting screws.
(2) Connect wire leads.
(3) Install instrument cluster; See "Group 8—Electrical".

Stereo Crossover

Removal

(1) Remove glove box.
(2) Disconnect electrical leads.
(3) Remove stereo crossover mounting screws (two).
(4) Remove stereo crossover through glove box opening.

Installation

(1) Enter stereo crossover through glove box opening and install mounting screws.
(2) Connect electrical leads.
(3) Install glove box.

Stereo Multiplex Crossover

Removal

(1) Remove glove box door.
(2) Remove glove box door check arm (two screws).

(3) Remove glove box mounting screws (six).
(4) Remove latch catch.
(5) Remove glove box through glove box opening.
(6) Disconnect electrical leads.
(7) Remove crossover attaching screws at panel upper retainer (two).
(8) Carefully remove crossover assembly.

Installation

(1) Carefully install crossover and attaching screws.
(2) Connect electrical leads.
(3) Install glove box and attaching screws.
(4) Install latch catch.
(5) Install glove box door check arm.
(6) Install glove box door.

Rear Speaker Fader or Stereo Control Switch

Removal

(1) Remove radio trim bezel.
(2) Remove the two switch mounting screws.
(3) Disconnect electrical leads and remove switch from radio bezel.

Installation

(1) Connect electrical leads to switch and install switch on radio bezel.
(2) Install radio trim bezel.

Rear Seat Speaker

Removal

(1) Remove spare tire.
(2) Disconnect speaker leads. Remove four sheet metal screws holding speaker to shelf panel.

Installation

(1) Position speaker under shelf panel and install four mounting screws. Connect speaker leads.
(2) Install spare tire and test operation of speaker.

SPEED CONTROL SYSTEM

INDEX

	Page		Page
General Information	9	Service Diagnosis	9
Installation	14	Test and Adjustments	11
Removal	16		

GENERAL INFORMATION

The speed control components (Figs. 1 and 2), are a push button momentary contact switch which activates the speed-setting components, a rotary switch for "Resume" operation, a transmission driven servo governor assembly which controls the throttle linkage and a combination electrical-vacuum brake switch which is used to deactivate the system when the brakes are applied. (The system may also be deactivated by turning the ignition key "OFF".)

The push button actuator (momentary contact switch) located at the end of the turn signal lever operates in three modes as follows:

(1) When the push button is fully depressed and released, current speed is locked-in.

(2) When engaged; holding the "Speed Set" button fully depressed causes car speed to drop until the button is released.

(3) When engaged; tapping the "Speed Set" button may increase the speed setting in small amounts.

The "Resume" speed operates as follows:

After the speed control system is engaged and the driver disengages the system by applying the brakes he can later resume his former speed by rotating the knurled plastic ring located near the end of the turn signal lever, clockwise and release.

Because of a low-speed inhibit switch located in the servo governor, both the "Resume Speed" and normal system engagement cannot be initiated below approximately 30 miles per hour.

The speed regulator is linked with the carburetor linkage through a flexible cable.

SERVICE DIAGNOSIS

Condition	Possible Cause	Correction
NO SPEED CONTROL WHEN BUTTON PRESSED.	(a) Fuse blown.	(a) Replace fuse.
	(b) Faulty electrical circuit.	(b) See "Electrical Tests".
	(c) Vacuum leak.	(c) Check vacuum lines.
	(d) Insufficient brake switch clearance.	(d) Adjust brake switch. See "Tests and Adjustments".
	(e) Speed control throttle cable disconnected.	(e) Connect cable.

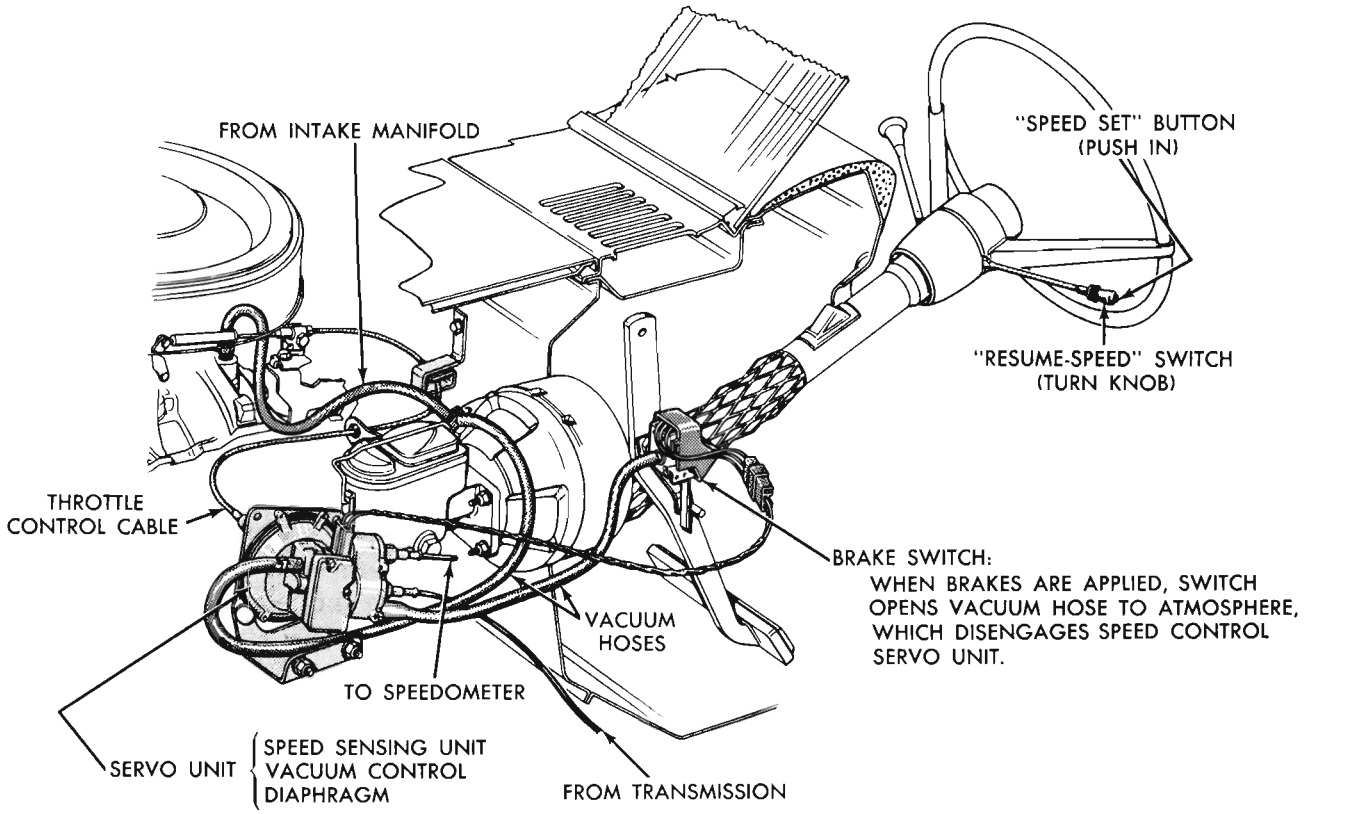

Fig. 1—Speed Control Unit—Belvedere Satellite

Condition	Possible Cause	Correction
NO AUTOMATIC RESUME WHEN RING IS ROTATED.	(a) Insufficient rotation of switch ring. (b) Faulty electrical circuit.	(a) Rotate ring 35° to 50°. (b) See "Electrical Tests".
NO AUTOMATIC RELEASE WHEN BRAKE PEDAL IS DEPRESSED.	(a) Improper installation of brake switch. (b) Closed off brake switch vacuum line. (c) Faulty electrical circuit.	(a) Adjust brake switch. See "Tests and Adjustments". (b) Repair or replace vacuum line. (c) See "Electrical Tests".
SPEED CONTROL ENGAGES WITHOUT ACTUATING SWITCH.	(a) Faulty electrical circuit.	(a) See "Electrical Tests".
CARBURETOR DOES NOT RETURN TO NORMAL IDLE.	(a) Speed control throttle cable maladjusted. (b) Standard throttle linkage faulty.	(a) Adjust speed control throttle cable. See "Tests and Adjustments". (b) Repair or replace linkage.
SPEEDOMETER NOISE, EXCESSIVE NEEDLE WAIVER OR ERRATIC SERVO LOCK-IN PERFORMANCE.	(a) Speedo cable kinked or damaged. (b) Cable core bent or too long. (c) Cable ferrule nut loose at speedometer head, transmission or speed control servo. (d) No lubricant on speedometer cable core. (e) Noisy speedometer head assembly.	(a) Align cables to avoid sharp bends or replace cable. (b) Replace core. (c) Tighten cable ferrule nuts. (d) Lubricate cables. (e) Repair or replace the speedometer as necessary.
SPEED SETTING AFTER LOCK-IN, TOO HIGH OR TOO LOW.	(a) Improper speed control throttle cable adjustment. (b) Vacuum leak. (c) Improper speed control lock-in adjustment.	(a) Adjust speed control throttle cable. (b) Check all vacuum hose connections. (c) See "Lock-in Screw Adjustment".

Condition	Possible Cause	Correction
UNIT DISENGAGES ON ROUGH ROAD.	(a) Insufficient brake switch clearance.	(a) Adjust brake switch.
RESUME SPEED IS POSSIBLE BELOW 20 M.P.H.	(a) Improper low speed inhibit switch adjustment. (b) Faulty electrical circuit.	(a) See "Cut-in speed Adjustment". (b) See "Electrical Tests".
SPEED CONTROL ENGAGES WHEN ENGINE IS STARTED OR DOES NOT DISENGAGE WHEN BRAKE PEDAL IS DEPRESSED.	(a) Faulty electrical circuit. (b) Vacuum hoses reversed at speed control servo.	(a) See "Electrical Tests". (b) Install hoses properly.

SERVICE PROCEDURES

Test and Adjustments

A. **Servo Adjustments**

There are three adjustment set screws in the servo housing (Figs. 3, 4 and 5). The adjustments of these set screws have been factory set and under normal conditions there should be no need for altering the factory setting during the life of the vehicle. These screws **should never be adjusted indiscriminately.** Need for adjustment can be determined only after accurate diagnosis of the Speed Control System operation. If adjustment is found to be necessary perform appropriate adjustment outlined in steps 1, 2 and 3; if screw is loose, stake side of servo housing adjacent to screw to insure snug fit.

The function of the three adjustment screws is as follows:

(1) Lock-in Screw Adjustment (Fig. 3) controls the accuracy of the speed control unit. When the direction signal lever push button is depressed at speeds above approximately 30 M.P.H.; the speed control system is activated, the system "locks in" and should hold the vehicle at virtually the same speed at which it is traveling when the push button is depressed.

IMPORTANT: Lock-in accuracy will be affected by:

(a) **Poor engine performance (need for tune-up etc.)**

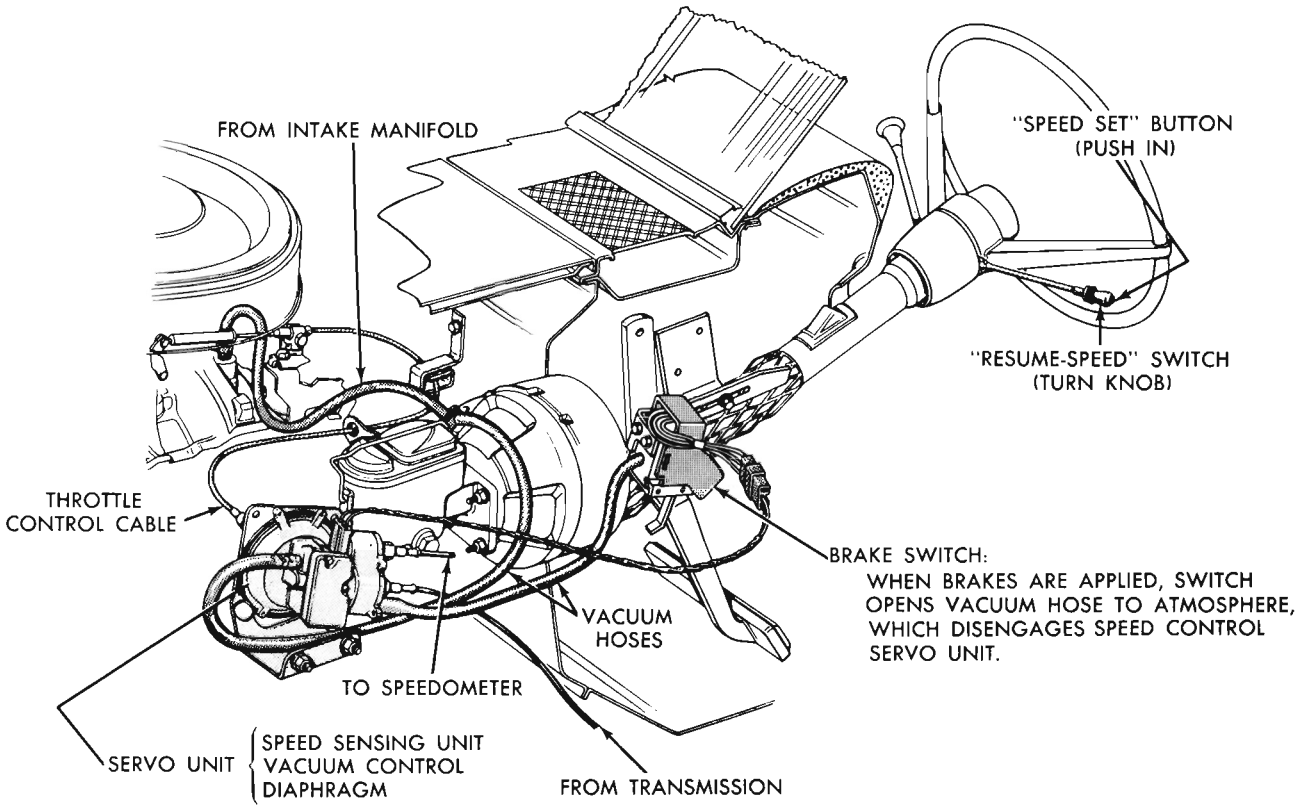

Fig. 2—Speed Control Unit—Fury—VIP

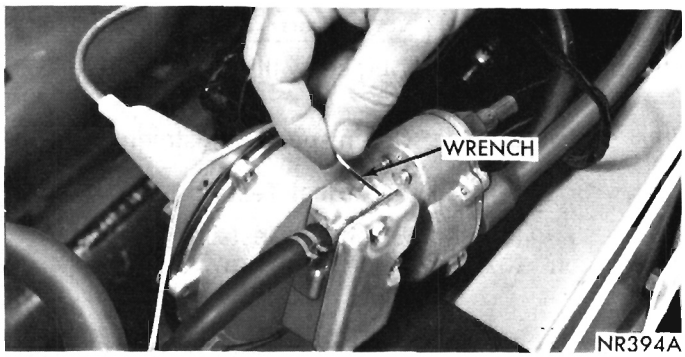

Fig. 3—Lock-in Screw Adjustment

(b) **Power to weight ratio (loaded gross weight of car; trailering).**

(c) **Improper slack in throttle control cable, (See "Throttle Control Cable Adjustment").**

After the steps (a) (b) and (c) have been considered and speed "sags" (drops) more than 2 to 3 M.P.H. when speed control is activated, the lock-in adjusting screw should be turned counter-clockwise (approximately 1/4 turn per one M.P.H. correction required). If "pull-up" (speed increase) of more than 2 to 3 M.P.H. occurs, the lock-in adjusting screw should be turned clockwise approximately 1/4 turn per one M.P.H. correction required).

CAUTION: This adjustment must not exceed two turns in either direction or damage to unit may occur.

(2) Cut-in Speed Adjustment (Fig. 4) regulates the minimum road speed at which the low speed inhibit switch allows the speed control to be activated. This should range from 25 to 33 miles per hour. If cut-in speed is too low, turn the set screw counterclockwise. If too high, turn the set screw clockwise; make adjustments in 1/8 turn increments.

CAUTION: Total adjustment must not exceed two turns.

(3) System Cut-Out Adjustment (Fig. 5) affects the road speed at which the system is deactivated during deceleration. Turning the screw clockwise increases road speed at which the speed control system deactivates (cuts out). A counterclockwise adjustment decreases the cut out speed. The desired cut out speed should occur approximately 5 miles per hour below the cut-in setting; make adjustments in 1/8 turn increments.

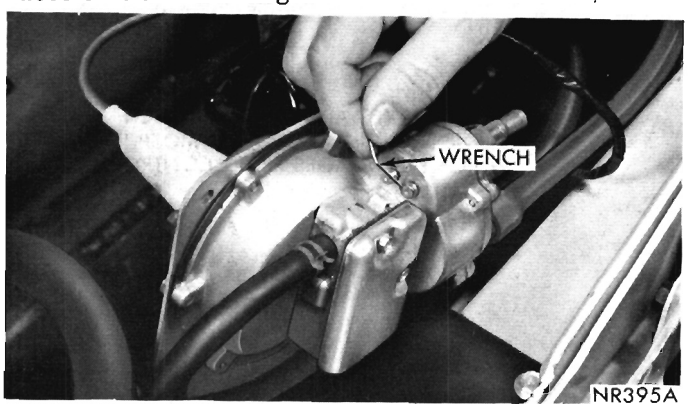

Fig. 4—Cut-in Screw Adjustment

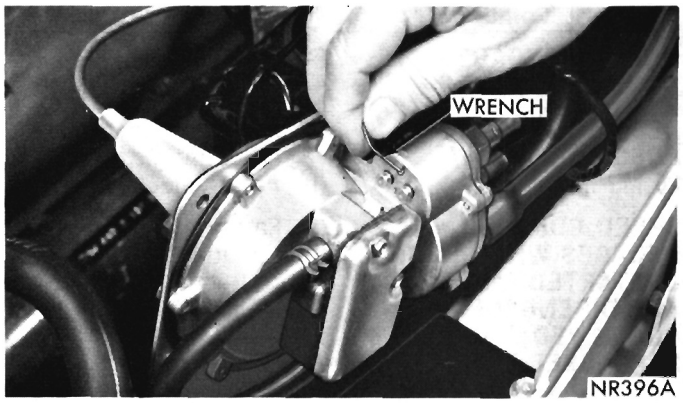

Fig. 5—Cut-out Screw Adjustment

CAUTION: Total adjustment must not exceed two turns.

B. **Throttle Control Cable Adjustment**

Optimum servo performance is obtained with a given amount of free play in the throttle control cable. To obtain proper free play, insert a 1/16 inch diameter pin between forward end of slot in cable end and carburetor linkage pin (hair pin clip removed from carburetor linkage pin) (Fig. 6). With choke in full open position and carburetor at curb idle, pull back on cable (toward dash panel) without moving carburetor linkage until all free play is removed. Tighten cable clamp bolt to 45 inch-pounds, remove 1/16 inch diameter pin and install hair pin clip.

C. **Brake Switch Adjustment**

(1) Disconnect harness connector at speed control servo and run a jumper wire from the blue wire terminal of connector to a good ground (Fig. 7).

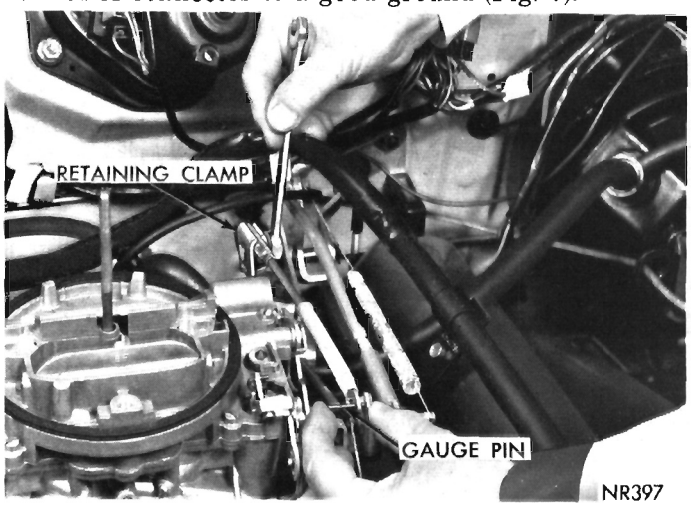

Fig. 6—Servo Cable Throttle Adjustment

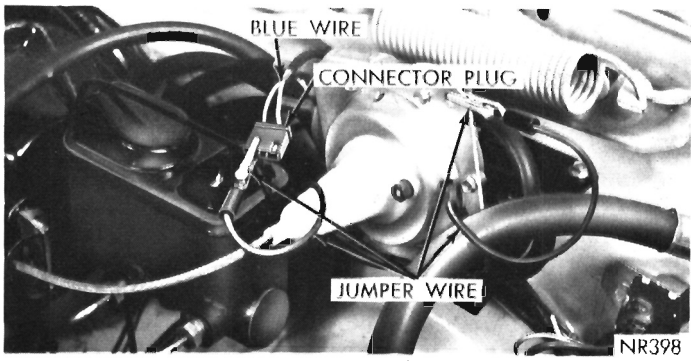

Fig. 7—Brake Switch Adjustment

(2) Turn ignition key to accessory position, depress and release turn signal lever push button and check clearance between engaged actuator arm and striker pin on brake pedal (Fig. 8), for Belvedere and Satellite models. Clearance should be .070 to .100 inch. On Fury and V.I.P. models check clearance between engaged actuator arm and brake pedal blade (Fig. 9). Clearance should be .100 inch.

(3) If clearance is not as specified in step 3, loosen striker pin or switch bracket and move, to obtain this clearance. Retighten nut securely, insuring that adjusted clearance is maintained.

Before making the low speed inhibit switch adjustments, check speedometer cables to assure proper core length so that both cable drive ends are properly engaged in servo shaft keyways without binding. Also insure that cable ferrule nuts are properly positioned on servo pilot diameters and nuts properly tightened.

D. **Electrical Test**

(1) Check fuse for continuity.

(2) Low speed inhibit switch test.

Disconnect harness plug at servo and using 12 volt signal light connect one lead to low speed inhibit switch terminal on servo and one lead to 12 volt positive source. Block front wheels; elevate rear wheels and drive vehicle wheels to approximately 30 miles per hour, switch should turn on between 25 and 33 mph and turn off approximately 5 miles per hour below the cut-in setting. See speed control adjustment directions to correct setting.

(3) Brake switch test:

Remove servo plug and attach jumper from blue wire lead in plug to good ground (Fig. 7), with ignition switch "On", brake switch should energize and latch on when turn signal "Speed Set" button or "Resume Speed" switch is actuated. (When brake switch actuator arm is depressed to open position the brake switch should remain disengaged). If unit functions properly check low speed inhibit switch. If unit does not function check black lead to brake switch—black lead should have 12 volts positive when ignition switch is on. If brake switch does not energize with "Speed Set" button or "Resume Speed" switch but will latch when manually closed by lifting switch actuator arm to engaged position, check turn signal assembly switch.

(4) Turn signal switch assembly.

Disconnect brake switch harness plug, attach one lead from test light to good ground and one lead from test light to red lead in harness plug; with ignition switch "On" light should be on when either "Speed Set" button is held depressed or "Resume" ring is rotated. Using 12 volt signal light connect one lead to yellow lead of servo plug (remove from servo first) and other lead to good ground. With ignition switch "On" light should be on. When turn signal "Speed Set" button is held depressed light should be off.

Speed Control Servo (Figs. 10 and 11)

Removal

(1) Remove two self-locking nuts attaching the servo cable cover to servo housing pull cover away from servo to expose cable retaining clip (Fig. 12) and remove clip attaching cable to servo diaphragm pin.

(2) Disconnect speedometer and transmission drive cables at the servo housing.

(3) Disconnect vacuum hoses at servo housing (Fig. 13) and electrical connector.

(4) Remove servo from mounting bracket (two self-locking nuts).

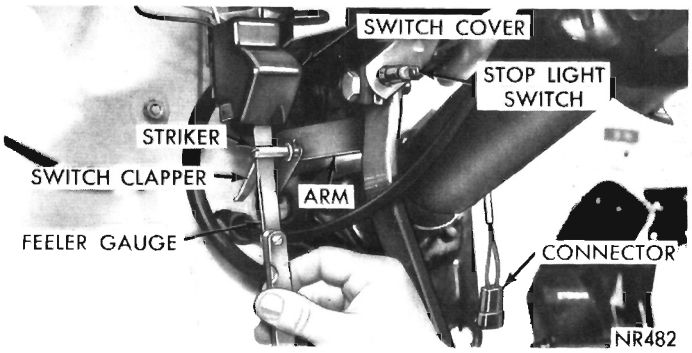

Fig. 8—Checking Clapper and Striker Pin Clearance—Belvedere and Satellite

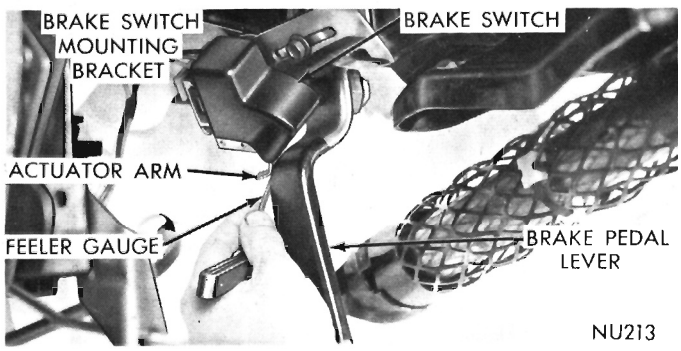

Fig. 9—Checking Actuator Arm to Pedal Blade—Fury, VIP

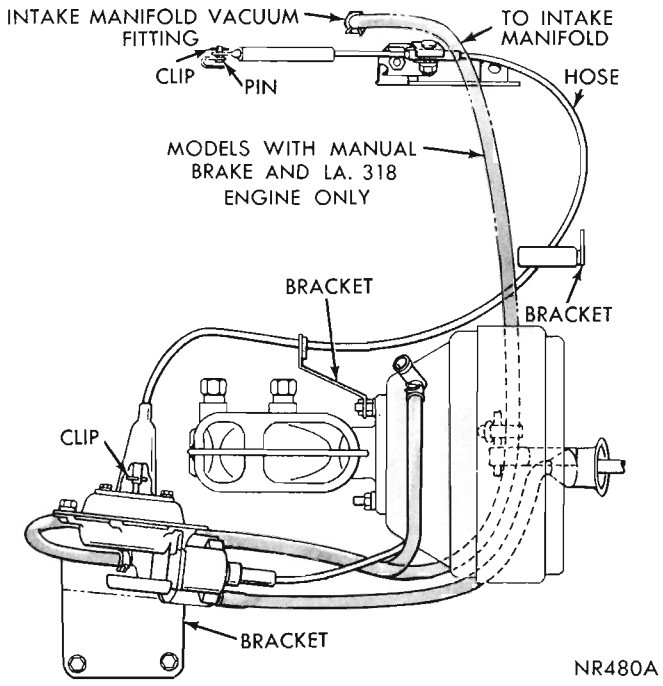

Fig. 10—Speed Control Servo Installation Belvedere and Satellite

Installation

(1) Position servo on mounting bracket studs and install attaching nuts. Tighten 75 to 115 inch-pounds.

(2) Install vacuum hoses and clamps, insuring that the vacuum supply hose leading from brake booster or intake manifold is connected to the front servo nipple, (Figs. 10 and 11). Make sure the hose clamp is locked securely.

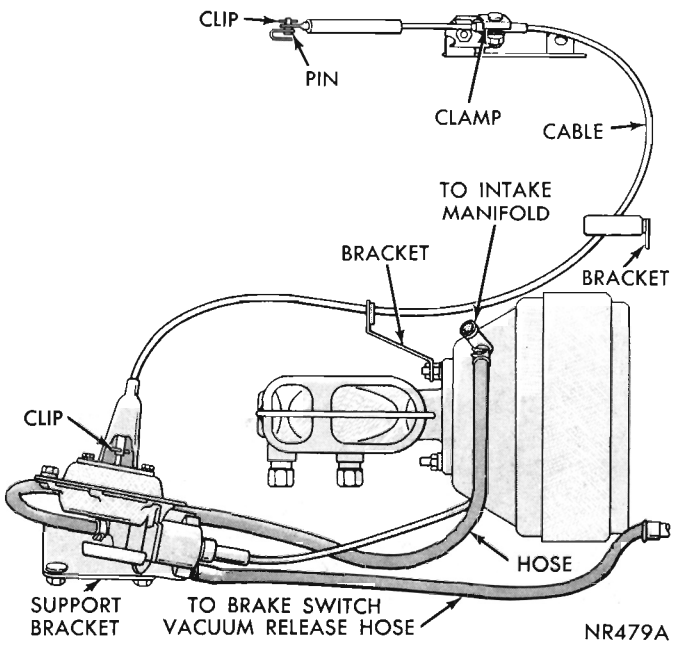

Fig. 11—Speed Control Servo Installation Fury and V.I.P.

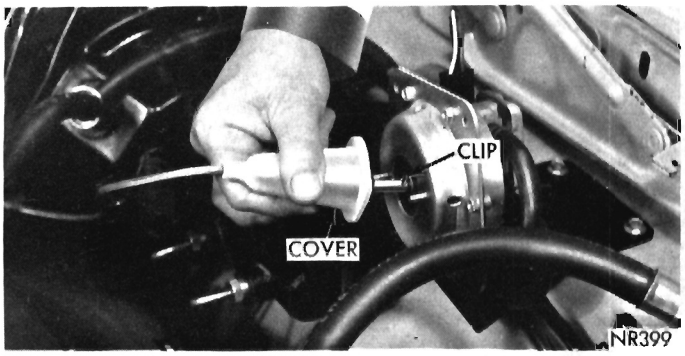

Fig. 12—Removing or Installing Cable Cover

CAUTION: Check vacuum hose routing from servo to brake release switch to insure freedom from any "kinks or routing" interferences.

(3) Connect speedometer and transmission drive cables at servo.

(4) Align servo cable to servo pin and install retaining clip.

(5) Install cable cover on servo studs and install attaching nuts. Tighten nuts securely.

(6) Install electrical connector at servo.

Servo Cable Assembly (Servo to Carburetor)

Removal

(1) Remove air cleaner.

(2) Disconnect cable at retaining clamp (double clamp) and at carburetor linkage, removing hair pin clip.

(3) Disconnect cable at servo (Fig. 12) and remove cable assembly.

Installation

(1) Locate cable through routing brackets on dash panel and on master cylinder studs (power brakes, so equipped).

(2) Connect cable at servo housing.

(3) Route cable through retaining clamp and connect at carburetor link lever pin.

(4) Adjust cable free play as described under "Throttle Control Cable Adjustment".

(5) Install hair pin clip.

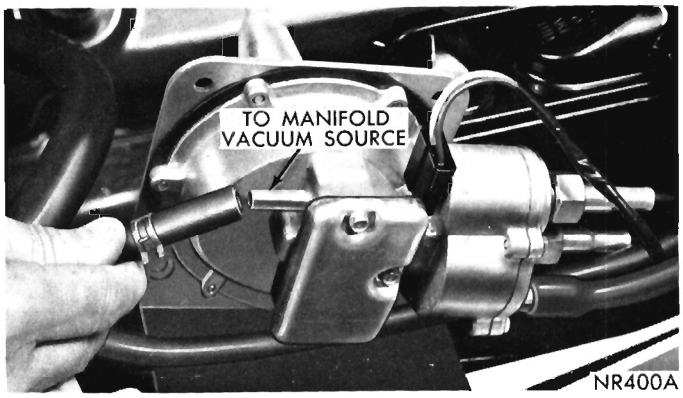

Fig. 13—Removing or Installing Servo Hoses

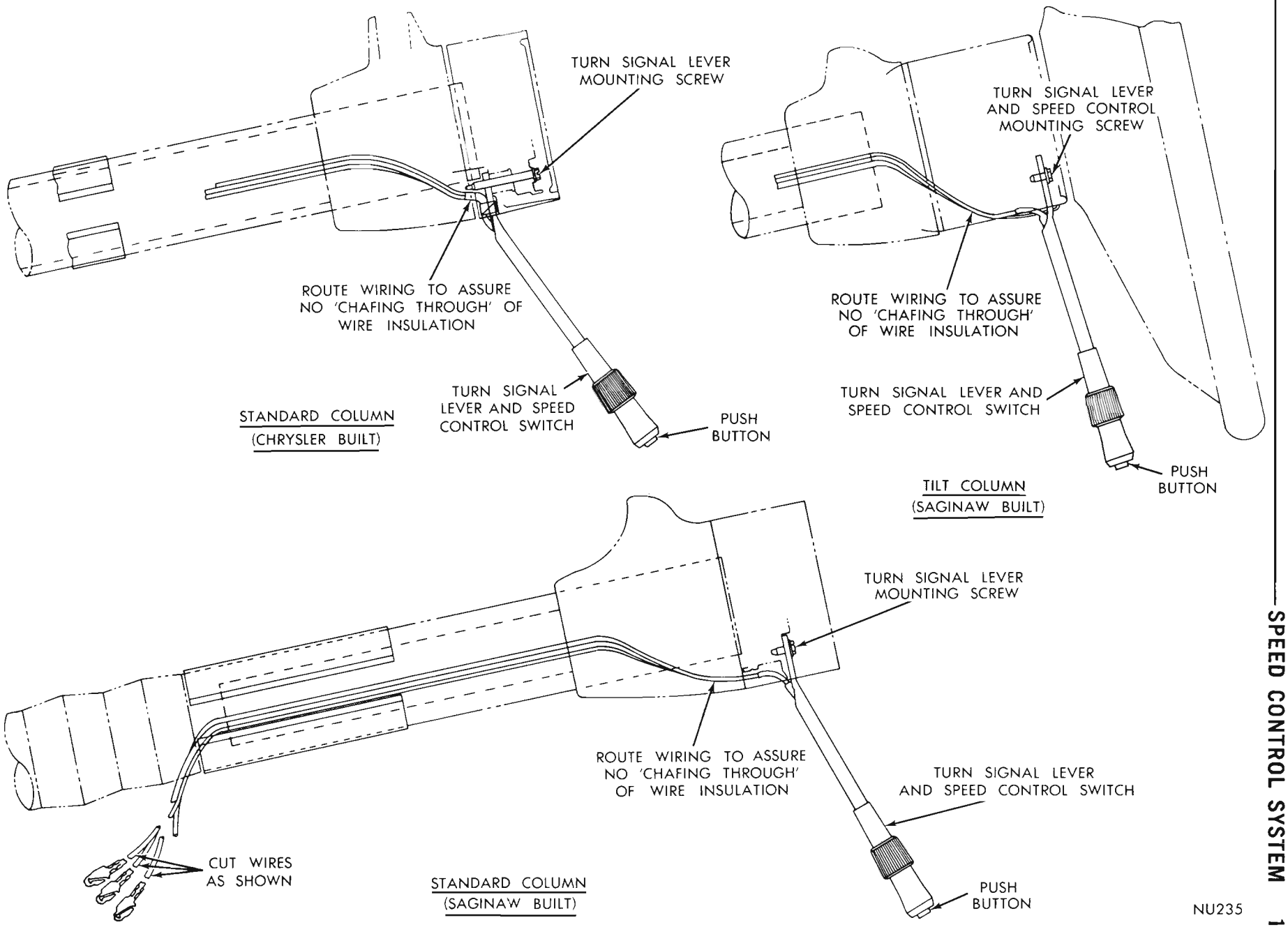

Fig. 14—Turn Signal Switch and Lever Switch (Installed)

Speed Control Brake Switch (Vacuum Release Valve)

Removal

(1) Disconnect battery cable at battery negative post.

(2) Remove the brake switch attaching screws and move switch forward to disconnect vacuum line at brake switch and electrical connections on harness.

Installation

(1) Connect electrical connections at harness and vacuum line to brake switch.

(2) Position brake switch on mounting bracket and install attaching screws.

(3) Connect battery cable at battery negative post.

(4) Adjust clearance between brake switch actuator arm and brake pedal blade for Fury and V.I.P. Models, brake switch actuator arm and striker pin on brake pedal for Belvedere and Satellite Models, as described under Tests and Adjustments Paragraph C "Brake Switch Adjustment".

Speed Control Switch (Turn Signal Lever) Standard Steering Column (Fig. 14)

Removal

(1) Disconnect battery negative terminal at battery negative post.

(2) Remove horn button and horn ring (so equipped).

(3) Remove steering wheel if required. See Group 19 "Steering".

(4) Remove turn signal switch and lever attaching screw.

(5) Remove steering column cover plate and support steering column while clamp is removed to prevent column from sagging.

(6) Remove wire harness trough to facilitate reaching the lower end of speed control switch lead wires (Fig. 14) and cut wires at terminal clips.

(7) Turn direction indicator lever sideways and pull lever up and wires out through opening between column and tube.

Installation

(1) Before installing new switch, remove terminal clips from ends of lead wires.

(2) Make a guide wire and thread one wire at a time through the opening in column until the three wires have been threaded through the opening. **Make guide wire long enough so that it can be reached at bottom of column before wire is attached to the upper hook.** When all wires have been pulled through, install new terminal clips. Install terminal clips into switch connector.

(3) Install harness trough, steering column cover plate and column support clamp.

(4) Install turn signal lever (speed control switch) and turn signal switch, plate and attaching screws.

(5) Install steering wheel (if previously removed) horn button, steering column cover plate. See Group 19 "Steering".

(6) Connect battery negative terminals at battery negative post.

Speed Control Switch (Turn Signal Lever) Tilt Steering Column

Removal

(1) Disconnect battery negative terminal at battery negative post.

(2) Remove steering column cover plate and turn signal lever access hole cover plate.

(3) Remove wire harness trough to facilitate reaching lower end of speed control switch lead wires (Fig. 14) and cut wires at terminal clips.

(4) Pull wires out through turn signal lever access hole.

(5) Unscrew turn signal lever from turn signal switch.

Installation

(1) Install turn signal lever to turn signal switch.

(2) Make a guide wire and thread one wire at a time through the opening in column until three wires have been threaded through the opening. **Make guide wire long enough so that it can be reached at bottom of column before wire is attached to the upper hook.** When all wires have been pulled through, install new terminal clips. Install terminal clips into switch connector.

(3) Install harness trough, steering column cover plate and turn signal lever access hole cover plate.

(4) Connect battery negative terminal at battery negative post.

TAIL GATE WIPER WASHER SYSTEM

INDEX

	Page
General Information	17 & 21
Intermediate Blade	19 & 21
Motor Pump	19 & 22
Service Diagnosis	17 & 21
Washer Reservoir	19 & 21
Wiper Blade—Replacement	19 & 21

GENERAL INFORMATION

The tail gate wiper washer system (Fig. 1) is a mechanically activated squeegee wiper with an electric motor driven washer pump for applying water to the tail gate glass.

Operation—Fury

The tail gate glass may be cleaned by:

(1) Lowering the glass by activating the tail gate switch.

(2) Activate the tail gate washer switch.

(3) Raising the glass by activating the tail gate switch. The wiped area is accomplished by using two 18″ flexible wiper blades, end to end, and an intermediate blade. When the glass is lowered to its bottom position an actuator arm is activated which permits the spring loaded blades to move to an "on glass" position. When the glass is raised to its upper limit, the actuator arm is again activated causing the wiper blades to go to an "off glass" position. This permits the blades to remain in the "off glass" (free) position until the glass is again lowered.

Washer fluid may be applied (as required) to the glass surface (with glass in lower position) by an electric driven pump, supplying nozzle assemblies located inside the upper part of the tail gate.

SERVICE DIAGNOSIS

Condition	Possible Cause	Correction
INTERMITTENT OPERATION OF WASHER.	(a) Loose wiring connection.	(a) Tighten connections and repair as necessary.
	(b) Faulty washer push button switch.	(b) Replace switch.
	(c) Faulty motor.	(c) Replace motor and pump assembly.
PUMP INOPERATIVE MOTOR RUNS.	(a) Nozzle jets plugged.	(a) Clean nozzle jets.
	(b) Broken or loose hose.	(b) Replace hose.
	(c) Faulty pump.	(c) Replace motor and pump assembly.
PUMP ASSEMBLY INOPERATIVE.	(a) Poor ground.	(a) Clean ground wire terminal and tighten mounting screw.
	(b) Loose wiring terminals.	(b) Tighten terminals.
	(c) Broken wires.	(c) Repair or replace wires.
	(d) Faulty switch.	(d) Replace switch.
	(e) Faulty motor.	(e) Replace motor and pump assembly.

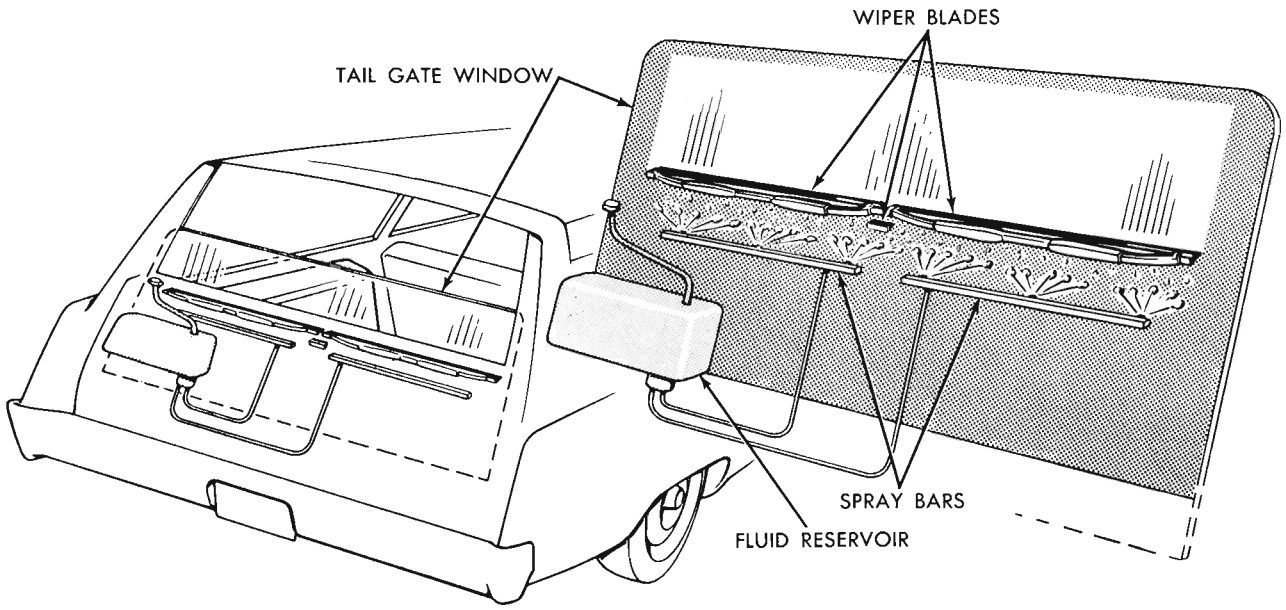

NR488A

Fig. 1—Tail Gate Window Washer and Wiper System

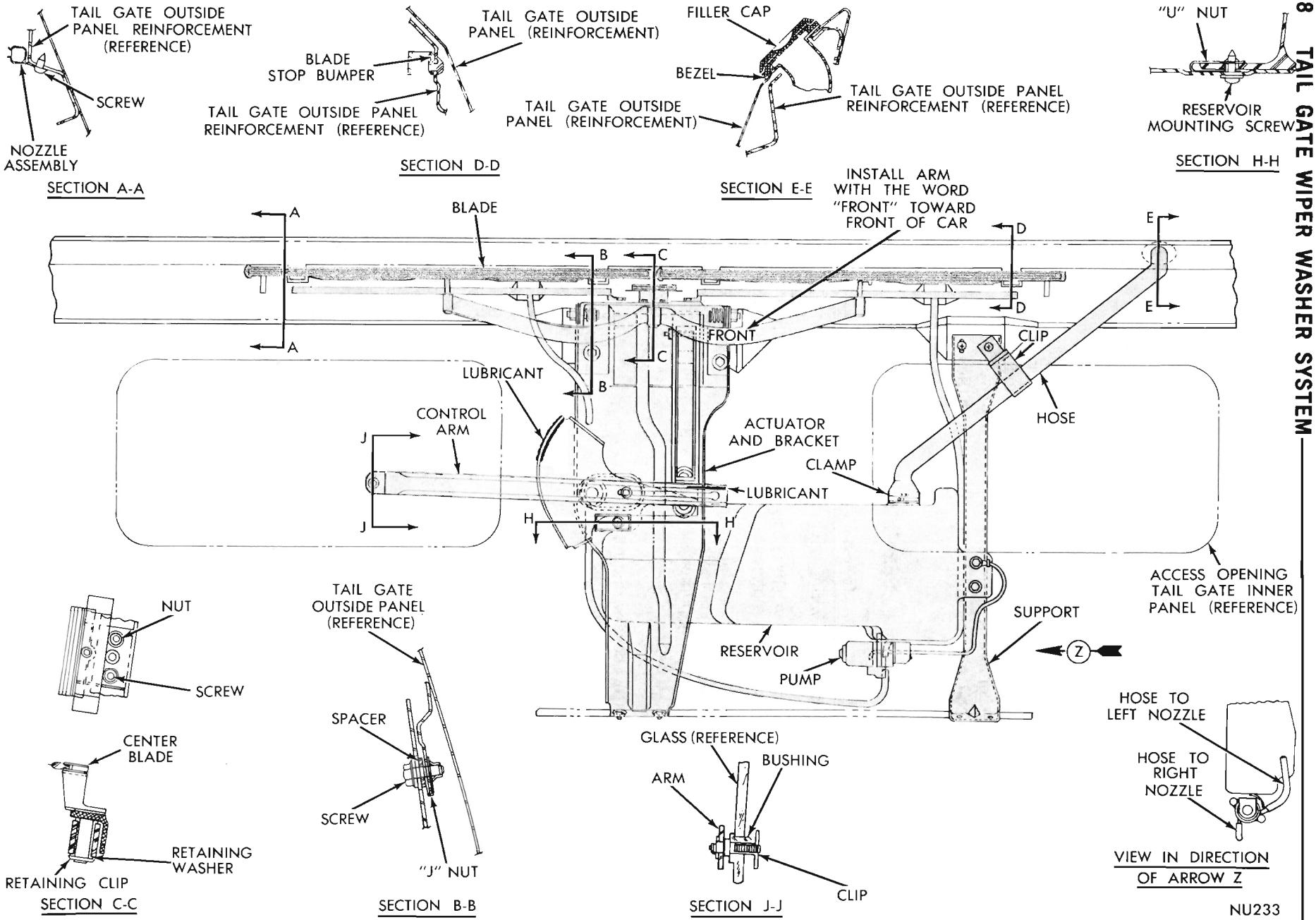

Fig. 2—Tail Gate Window Washer Installed— Fury and VIP

Condition	Possible Cause	Correction
WIPER BLADES WILL NOT GO ONTO GLASS.	(a) Loose control arm. (b) Torsion springs broken.	(a) Repair control arm. (b) Replace springs.
WIPER BLADES WILL NOT COME OFF OF GLASS.	(a) Loose control arm. (b) Actuator pin loose.	(a) Repair control arm. (b) Reinstall pin.
UNWIPED STRIP IN CENTER OF GLASS	(a) Faulty or worn center blade.	(a) Replace blade.

SERVICE PROCEDURES

Wiper Blade Replacement (18 inch Blades)—Fury

(1) Lower the tail gate glass to full bottom position.
(2) Open tail gate to horizontal position.
(3) Remove inner trim panel of tail gate.
(4) Raise glass approximately half way, after tripping limit switch.
(5) Position the yoke for "off glass" condition.
(6) Remove wiper control arm and pin from glass.
(7) Disengage glass from window regulator arms and remove glass.
(8) Position the yoke for "on glass" condition.
(9) Remove and replace blades.
(10) **Do Not get lubricant on new wiper blades.**
(11) Position the yoke for "off glass" condition.
(12) Install glass and assemble to window regulator.
(13) Connect wiper control arm and pin to glass.
(14) Install inner trim panel.
(15) Lower glass to full bottom position and check operation of wiper system.

Intermediate Blade Replacement—Fury

(1) Perform steps 1 through 8 under "Wiper Blade Replacement" and remove wiper mounting arm and wiper blades.
(2) Remove right nozzle assembly feed hose.
CAUTION: Do not break nozzle.
(3) Remove wiper mounting bracket assembly.
(4) Remove two nuts and screws and remove intermediate wiper blade assembly (Fig. 2).
(5) Install new intermediate wiper blade with mounting screws. **Do not get lubricant on wiper blades.**
(6) Install wiper mounting bracket assembly.
(7) Install right nozzle feed hose and position yoke for "off glass" condition.
(8) Install wiper blade mounting arm and blades. **Do Not get lubricant on wiper blades.**

Washer Reservoir and Motor Pump Assembly—Fury

Removal

(1) Lower tail gate glass to bottom position and open tail gate to horizontal position.
(2) Remove tail gate inner trim panel.
(3) Raise glass sufficient to allow access to reservoir assembly.
CAUTION: Do not exceed normal height of glass travel.
(4) Remove washer hoses from both outlets at washer pump, being careful not to break outlets; identify hoses.
(5) Disconnect one wire to washer motor.
(6) Remove three mounting screws supporting reservoir and remove rubber filler hose at reservoir.

Installation

(1) Position reservoir and install mounting screws.
(2) Connect washer hoses at washer pump, making sure hoses are routed to the correct outlets.
(3) Connect rubber filler hose at reservoir.
(4) Reconnect the wire at washer motor.
(5) Install tail gate inner panel.
(6) Lower tail gate glass to bottom position and recheck motor and pump operation.

Washer Nozzle Replacement

(1) Perform steps 1 through 8 under "Wiper Blade Replacement"; then remove arm and blade assembly.
(2) Disengage reservoir from wiper bracket assembly.
(3) Remove wiper bracket assembly.
(4) Remove the screws mounting the two nozzle assemblies.
(5) Inspect and clean nozzles. Replace if nozzles are damaged.
(6) Position nozzles and install mounting screws.
(7) Install wiper bracket assembly (Do not attach).
(8) Attach reservoir assembly to bracket assembly, and secure bracket assembly at top and bottom.
(9) Connect washer hose to nozzles.
CAUTION: Do not break nozzle inlets.
(10) Install arm and blade assembly. **Do not get lubricant on wiper blades.**
(11) Position yoke for "off glass" condition.
(12) Install glass and attach wiper control arm.
(13) Run glass to bottom position.
(14) With tail gate closed, check operation of new nozzles.

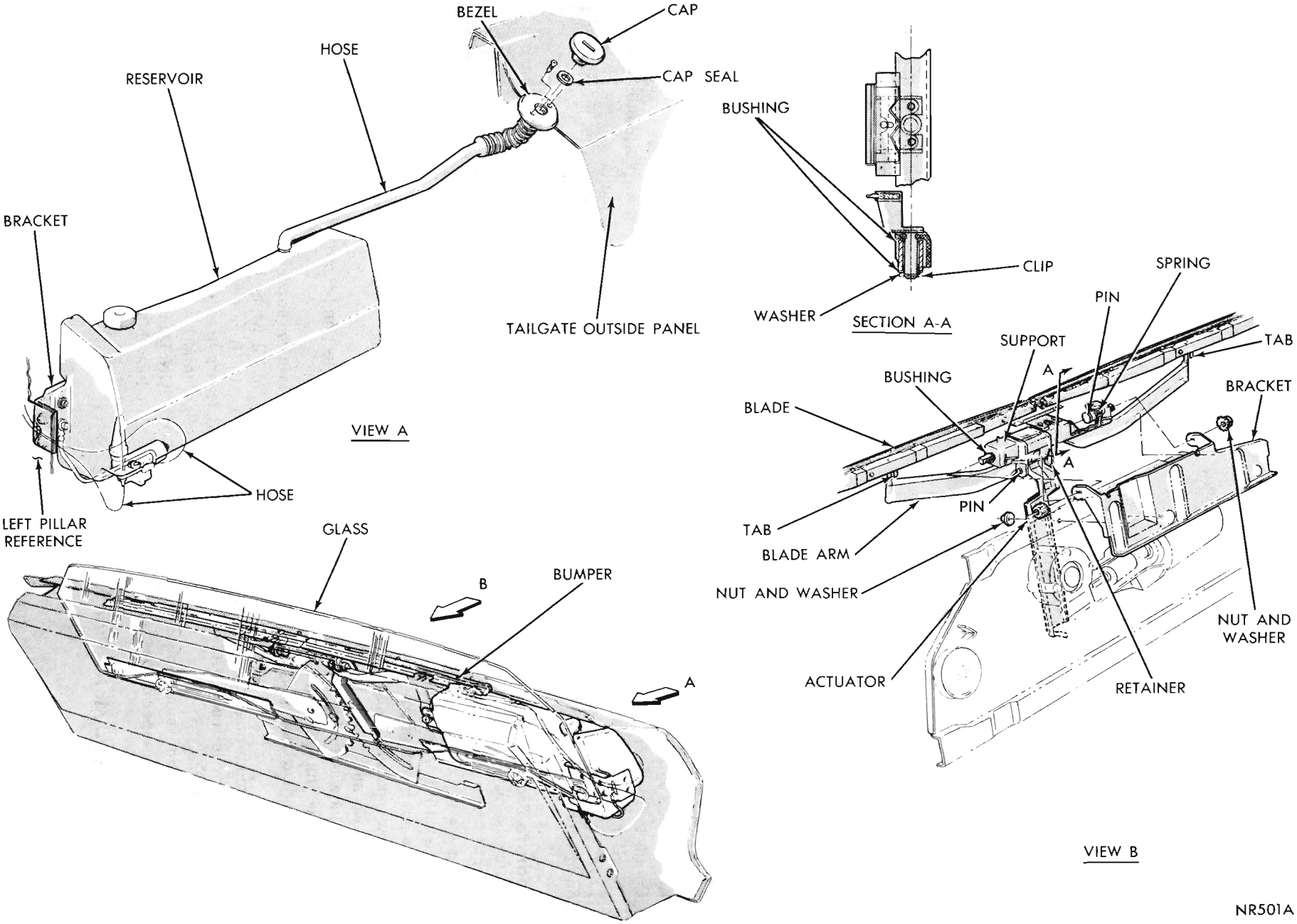

Fig. 3—Tail Gate Window Washer Installed—Belvedere and Satellite

(15) If operation is now satisfactory, install inner tail gate trim panel.

Operation—Belvedere and Satellite

The tail gate glass may be cleaned by:

(1) Lowering the glass by activating the tail gate switch.

(2) Activate the tail gate washer switch.

(3) Raising the glass by activating the tail gate switch. The wiped area is accomplished by using two 18" flexible wiper blades, end to end, and an intermediate blade. When the glass is lowered to its bottom position an actuator arm is activated by the regulator sector gear which permits the spring loaded blades to move to an "on glass" position. When the glass is raised to its upper limit, the actuator arm is again activated causing the wiper blades to go to an "off glass" position. This permits the blades to remain in the "off glass" (free) position until the glass is again lowered.

Washer fluid may be applied (as required) to the glass surface (with glass in lower position) by an electric driven pump, supplying nozzle assemblies located inside the upper part of the tail gate.

SERVICE DIAGNOSIS

Condition	Possible Cause	Correction
INTERMITTENT OPERATION OF WASHER.	(a) Loose wiring connection.	(a) Tighten connections and repair as necessary.
	(b) Faulty washer push button switch.	(b) Replace switch.
	(c) Faulty motor.	(c) Replace motor and pump assembly.
PUMP INOPERATIVE MOTOR RUNS.	(a) Nozzle jets plugged.	(a) Clean nozzle jets.
	(b) Broken or loose hose.	(b) Replace hose.
	(c) Faulty pump.	(c) Replace motor and pump assembly.
PUMP ASSEMBLY INOPERATIVE.	(a) Poor ground.	(a) Clean ground wire terminal and tighten mounting screw.
	(b) Loose wiring terminals.	(b) Tighten terminals.
	(c) Broken wires.	(c) Repair or replace wires.
	(d) Faulty switch.	(d) Replace switch.
	(e) Faulty motor.	(e) Replace motor and pump assembly.
WIPER BLADES WILL NOT GO ONTO GLASS.	(a) Faulty actuator arm.	(a) Replace actuator arm.
	(b) Torsion springs broken.	(b) Replace springs.
WIPER BLADES WILL NOT COME OFF OF GLASS.	(a) Faulty actuator arm.	(a) Replace actuator arm.
	(b) Actuator pin loose.	(b) Reinstall pin.
UNWIPED STRIP IN CENTER OF GLASS.	(a) Faulty or worn center blade.	(a) Replace blade.
	(b) Lack of blade pressure.	(b) Add spacers at top two mounting screws of regulator.

SERVICE PROCEDURES

Wiper Blade Replacement (18 Inch Blades)—Belvedere and Satellite

(1) Lower the tail gate glass to full bottom position.

(2) Open tail gate to horizontal position.

(3) Remove inner trim panel of tail gate.

(4) Raise glass approximately half way, after tripping limit switch.

(5) Position actuator arm for "off glass" condition of blades.

(6) Disengage glass lower frame with window regulator arms, remove lower frame and remove glass.

(7) Scribe location of window regulator or tail gate inner panel mounting brackets and remove the four screws attaching the window regulator to the mounting brackets. Do not lose any spacers and note location. Slide the regulator assembly to bottom of tail gate.

(8) Depress locking tab on side of blade to release blades from mounting arm pins (Fig. 3).

(9) Install new blades with locking tab down. **Do not get lubricant on wiper blades.**

(10) Position window regulator on mounting brackets and install mounting spacers (if used) and screws noting scribe mark locations.

(11) Insert tail gate glass into tail gate, install glass lower frame and engage with regulator arms.

(12) Install tail gate inner panel.

(13) Lower glass to full bottom position and recheck operation of wiper blades.

Intermediate Blade Replacement—Belvedere and Satellite

(1) Perform steps 1 through 7 under "Wiper Blade Replacement" and remove wiper mounting arm and wiper blades.

(2) Remove wiper actuator arm.

(3) Remove wiper washer mounting bracket.
mediate wiper blade assembly (Fig. 3).
(4) Remove two nuts and screws and remove inter-
(5) Install new intermediate wiper blade with mounting screws. **Do not get lubricant on wiper blades.**
(6) Install wiper washer mounting bracket assembly.
(7) Install wiper actuator arm, and position to "off glass" condition.
(8) Install wiper blade mounting arm and blades. **Do not get lubricant on wiper blades.**

Washer Reservoir and/or Motor Pump Assembly—Belvedere and Satellite

Removal

(1) Lower tail gate glass to bottom position and open tail gate to horizontal position.
(2) Remove tail gate inner trim panel.
(3) Raise glass sufficient to allow access to reservoir assembly.
CAUTION: Do not exceed normal height of glass travel.
(4) Remove washer hoses from both outlets at washer pump, being careful not to break outlets; identify hoses.
(5) Disconnect one wire to washer motor.
(6) Remove three mounting screws supporting reservoir and remove rubber filler hose at reservoir.

Installation

(1) Position reservoir and install mounting screws.
(2) Connect rubber filler hose at reservoir.
(3) Reconnect the wire at washer motor.
(4) Connect washer hose at washer pump, **making sure hoses are routed to the correct outlets.**
(5) Install tail gate inner panel.
(6) Lower tail gate glass to bottom position and recheck motor and pump operation.

Washer Nozzle Replacement—Belvedere and Satellite

(1) Perform steps 1 through 7 under "Wiper Blade Replacement"; then remove washer hose from nozzle.
(2) Remove the four screws mounting the two nozzle assemblies.
(3) Inspect and clean nozzles. Replace if nozzles are damaged.
(4) Position nozzles and install mounting screws.
(5) Connect washer hose to nozzles.
(6) Perform steps 10 through 13 under "Wiper Blade Replacement" and recheck nozzles operation.

FRONT SUSPENSION AND STEERING LINKAGE

CONTENTS

	Page		Page
LOWER BALL JOINTS	11	TORSION BAR	5
LOWER CONTROL ARM AND SHAFT	9	UPPER BALL JOINTS	14
LOWER CONTROL ARM STRUT	11	UPPER CONTROL ARM	12
PRE-ALIGNMENT INSPECTION	3	WHEEL ALIGNMENT	3
Height Adjustment	4	Camber	3
SPECIFICATIONS	14	Caster	3
STEERING KNUCKLES	6	Steering Axis Inclination	3
STEERING LINKAGE	7	Toe-in	3
SWAY BAR	8	Toe-Out On Turns (Turning Radius)	3
TIGHTENING REFERENCE	15		

GENERAL INFORMATION

The torsion bar rear anchors are integral with the engine rear support member and the front anchors, which are part of the lower control arms, provide the means of adjusting vehicle front height. The lower ball joints are integral with the steering arms. Compression type lower ball joints are used on all models.

All ball joints and the torsion bars at the front of the rear anchors are effectively sealed against road splash by tightly fitted balloon type flexible seals. The ball joints and tie rod ends are of the semi-permanent lubricated type.

When lubrication of the ball joints and tie rod end assemblies is required, remove the plugs and install a lubrication fitting. After the lubrication is completed reinstall the plugs.

Lower ball joints, steering arm assemblies, should not be replaced for looseness if the axial end play (Up and Down movement) is under .070 inch. Looseness of this nature is not detrimental and will not affect front wheel alignment or vehicle stability.

Service replacement ball joints are equipped with a "Knock-Off" type lubrication fitting. After lubricating knock off that portion of the fitting over which the lubrication gun was installed. A ball check is installed in the remaining portion of the fitting to prevent foreign materials from passing through.

The tie rod end seals are serviced separately and should be inspected for damage at all oil change periods.

Caster and camber adjustments are controlled by cams on the upper control arm pivot bolts.

All front suspension points that contain rubber should be tightened while the suspension is at the specified height (see specifications), with full weight of vehicle on its wheels.

Rubber bushings should not be lubricated at any time.

ON MODELS EQUIPPED WITH DISC BRAKES, REFER TO GROUP 5 FOR BRAKE DISC REMOVAL AND INSTALLATION PROCEDURES.

SERVICE DIAGNOSIS

Condition	Possible Cause	Correction
FRONT END NOISE	(a) Ball joint needs lubrication.	(a) Lubricate ball joint.
	(b) Shock absorber inoperative or bushings worn, or loose shock absorber mounting.	(b) Replace busnings, shock absorber or tighten shock absorber mounting nuts.
	(c) Worn strut bushings.	(c) Replace bushing.
	(d) Loose struts.	(d) Inspect bushings and tighten strut nuts.
	(e) Loose steering gear on frame.	(e) Tighten steering gear mounting bolts.
	(f) Worn upper control arm bushings.	(f) Replace worn bushings.
	(g) Worn lower control arm shaft bushings.	(g) Replace worn bushings.
	(h) Excessively worn upper ball joint.	(h) Replace ball joint.
	(i) Excessively worn lower ball joint.	(i) Replace ball joint.
	(j) Worn tie rod ends.	(j) Replace tie rod end.
	(k) Loose or worn front wheel bearings.	(k) Adjust or replace bearings as necessary.
	(l) Steering arm contacting the control arm wheel stop.	(l) Smooth off contacting areas and lubricate with a water resistant grease.

Condition	Possible Cause	Correction
POOR DIRECTIONAL STABILITY	(a) Low or uneven tire pressure.	(a) Inflate tires to correct pressure.
	(b) Loose wheel bearings.	(b) Adjust wheel bearing.
	(c) Improper steering cross shaft adjustment.	(c) Adjust steering cross shaft.
	(d) Steering gear not centered.	(d) Adjust steering gear.
	(e) Worn idler arm bushing.	(e) Replace bushing or idler arm as necessary.
	(f) Loose or failed front strut bushings.	(f) Replace bushings.
	(g) Weak or broken rear spring.	(g) Replace spring.
	(h) Incorrect front wheel alignment or suspension heights.	(h) Measure and adjust front wheel alignment and suspension heights.
	(i) Shock absorber inoperative.	(i) Replace shock absorber.
	(j) Un-horizontal center link (cocked).	(j) Align steering gear or replace crossmember.
HARD STEERING	(a) Ball joints need lubrication.	(a) Lubricate ball joints.
	(b) Low or uneven tire pressure.	(b) Inflate tires to the recommended pressures.
	(c) Low power steering fluid level.	(c) Fill power steering pump reservoir to correct level.
	(d) Lack of assist of power steering system.	(d) Inspect and test power steering pump and gear. Service as required.
	(e) Low front suspension height.	(e) Adjust heights to specifications.
	(f) Incorrect front wheel alignment (Particularly caster) resulting from a bent control arm steering knuckle or steering knuckle arm.	(f) Replace bent parts and adjust front wheel alignment.
	(g) Steering gear not adjusted properly.	(g) Adjust steering gear.
	(h) Idler arm binding.	(h) Replace idler arm.
EXCESSIVE PLAY IN STEERING	(a) Worn or loose front wheel bearings.	(a) Adjust or replace wheel bearings as necessary.
	(b) Incorrect steering gear adjustment.	(b) Adjust steering gear.
	(c) Loose steering gear to frame mounting bolts.	(c) Tighten steering gear to frame bolts.
	(d) Worn tie rod ends.	(d) Replace tie rods as necessary.
	(e) Worn steering gear parts.	(e) Replace worn steering gear parts and adjust steering gear as necessary.
	(f) Worn upper control arm ball joints.	(f) Replace ball joints.
	(g) Worn lower control arm ball joints.	(g) Replace ball joints.
	(h) Worn idler arm bushing.	(h) Replace bushing.
FRONT WHEEL SHIMMY	(a) Tire and wheel out of balance.	(a) Balance wheel and tire assembly.
	(b) Uneven tire wear, or excessively worn tires.	(b) Rotate or replace tires as necessary.
	(c) Worn or loose wheel bearings.	(c) Replace or adjust wheel bearings.
	(d) Worn tie rod ends.	(d) Replace tie rod ends.
	(e) Strut mounting bushings loose or worn.	(e) Replace strut mounting bushings.
	(f) Incorrect front wheel alignment and car height (particularly caster).	(f) Adjust front wheel alignment and car height.
	(g) Upper ball joints loose or excessively worn.	(g) Tighten to specifications or replace as necessary.
VEHICLE PULLS TO ONE SIDE	(a) Low or uneven tire pressure.	(a) Inflate tires to the recommended pressure.
	(b) Front brake dragging.	(b) Adjust brakes.
	(c) Grease, lubricant or brake fluid leaking onto brake lining.	(c) Replace brake shoe and lining as necessary and eliminate all leaks.
	(d) Loose strut bushings.	(d) Inspect bushings and replace as necessary.
	(e) Power steering control valve out of adjustment.	(e) Adjust steering gear control valve.
	(f) Incorrect front wheel alignment (particularly caster).	(f) Adjust front wheel alignment.
	(g) Broken or sagging front or rear spring.	(g) Replace spring.
	(h) Excessively worn suspension pivot bushings.	(h) Replace bushings.

SERVICE PROCEDURES

WHEEL ALIGNMENT

Front wheel alignment is the proper adjustment of all the interrelated suspension angles affecting the running and steering of the front wheels of the vehicle. The importance of wheel alignment and wheel balancing is considered essential in order to maintain ease of steering, good directional stability and to prevent abnormal tire wear.

Under every day driving conditions the front wheel alignment angles change and therefore it becomes necessary that every vehicle should have an alignment check at least once a year. Such an inspection of the front suspension and steering components is a preventitive maintenance service and also has a definite bearing on the safe operation of the vehicle.

The method of checking front wheel alignment will vary depending on the type of equipment being used. The instructions furnished by the manufacturer of the equipment should always be followed, with the exception of the specifications as recommended by the Chrysler Motors Corporation should always be used.

There are six basic factors which are the foundation to front wheel alignment; height, caster, camber, toe-in, steering axis inclination and toe-out on turns (Fig. 1). All are mechanically adjustable except steering axis inclination and toe-out on turns. The latter two are valuable in determining if parts are bent or damaged particularly when the camber and caster adjustments cannot be brought within the recommended specifications.

Do not attempt to modify any suspension or steering components by heating or bending.

All adjustments should be made in the following sequence:

(a) Front suspension height
(b) Caster and Camber
(c) Toe-in
(d) Steering Axis Inclination
(e) Toe-out on Turns.

Caster is the number of degrees of forward or backward tilt of the spindle support arm at the top. Forward tilt of the spindle support arm at the top is negative caster. Backward tilt of the spindle support arm at the top from true vertical is positive caster.

Camber is the number of degrees the top of the wheel is tilted inward or outward from a true vertical. Inward tilt of the top of the wheel from true vertical is negative camber. Outward tilt of the wheel at the top is positive camber. Excessive camber is a tire wear factor; negative camber causes wear on the inside of the tire, while positive camber causes wear to the outside.

Toe-in is measured in inches and is the distance the leading edges of the tires are closer than the trailing edges. Toe-in is considered the most serious cause for excessive tire wear. Toe-in is the last of the alignment angles to be set in the front wheel alignment operation.

Steering Axis Inclination is measured in degrees and is the amount the spindle support center line is tilted from true vertical. It has a fixed relationship with camber settings and does not change except when a spindle or ball joint is damaged or bent. This angle is not adjustable and damaged parts must be replaced.

Toe-out on Turns (Turning Radius) is measured in degrees and is the amount one front wheel turns sharper than the other on a turn. This angle is designed into the steering arms in relationship to the wheelbase of the vehicle and is not adjustable. When checking the turning radius and it is found not to be within the recommended specifications, look for possible bent or damaged components.

PRE-ALIGNMENT INSPECTION

Before any attempt is made to change or correct the wheel alignment factors the following inspection and necessary corrections must be made on those

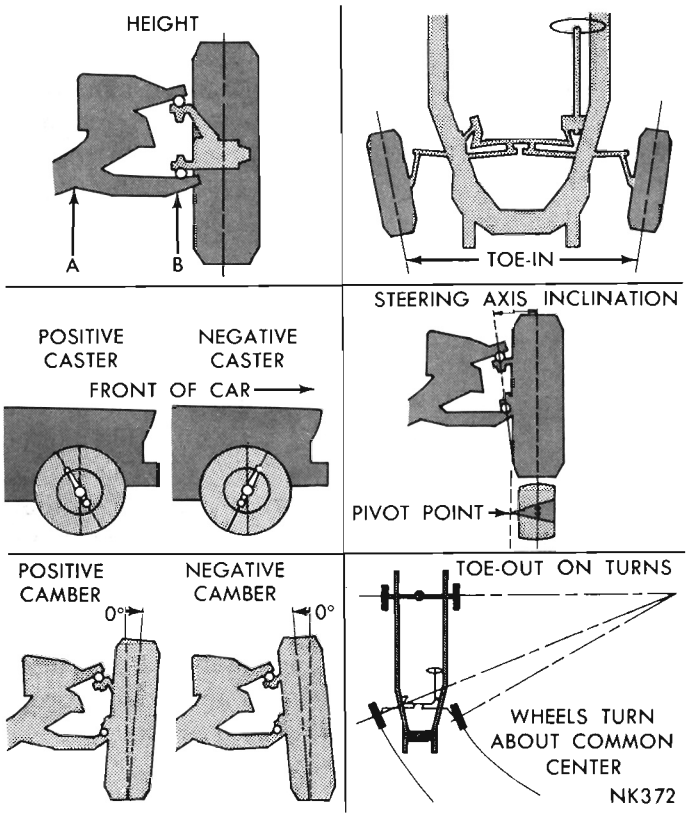

Fig. 1—Wheel Alignment Factors

parts which influence the steering of the vehicle.

(1) Check and inflate tires to recommended pressure. All tires should be same size and be in good condition and have approximately same wear. Note type of tire tread wear which will aid in diagnosing (Group 22).

(2) Check and adjust front wheel bearings (Group 22).

(3) Check front wheel and tire assembly for radial and lateral runout (follow the Equipment Manufacturers Instructions (Group 22).

(4) Check wheel and tire for unbalance conditions both static and dynamic which could affect steering.

(5) Inspect ball joints and all steering linkage pivot points for excessive looseness.

(6) Check shock absorbers for leaks and jounce vehicle to determine if shock absorbers have proper control.

(7) Check steering gear for roughness, binding or sticking condition and adjust as necessary.

(8) Check rear springs for cracks or broken leaves and "U" bolts for proper tightness and measure height differential between left and right sides of vehicle. (Vehicle should be on level floor or on alignment rack) with a full tank of fuel and no luggage or passenger load.

(9) Front suspension heights must only be checked after the vehicle has the recommended tire pressures, full tank of fuel, no passenger load and is on a level floor or alignment rack.

To obtain accurate readings, vehicle should be jounced in following manner just prior to taking each measurement (Height - Caster - Camber and Toe): Grasp bumpers at center (rear bumper first) and jounce up and down several times. Always release bumpers on the down cycle after jouncing both rear and front ends an equal number of times.

WHEEL ALIGNMENT ADJUSTMENTS

Front wheel alignment settings must be held to specifications to hold tire wear to a minimum and to maintain steering ease and handling of vehicle.

The equipment manufacturers recommended procedure should always be followed. Any parts of the front suspension system should be replaced if they are found to be bent. **Do not attempt to straighten any bent part.**

Height

Front suspension heights must be held to specifications for a satisfactory ride, correct appearance, proper front wheel alignment and reduced tire wear.

The heights should only be measured after the vehicle has the recommended tire pressures, a full tank of fuel, no passenger or luggage compartment load and is on a level floor or alignment machine.

(1) Clean all foreign material from bottom of steering knuckle arm assemblies and from lowest area of the height adjusting blades directly below center of lower control arm inner pivots.

(2) Jounce vehicle several times releasing it on downward motion.

(3) Measure distance from lowest point of one adjusting **blade** to floor (Measurement A) and from lowest point of steering knuckle arm, at the centerline, on same side (Measurement B) to floor (Fig. 2). **Measure only one side at a time.**

The difference between A and B (A always being greater than B) is the front suspension height.

(4) Refer to Specifications and adjust if necessary by turning torsion bar adjusting bolt clockwise to increase height and counterclockwise to decrease height.

(5) After each adjustment, jounce vehicle before remeasuring. Both sides should be measured even though only one side has been adjusted.

(6) Measure other side in same manner. The maximum allowable difference in suspension height from side to side is 1/8 inch on all Models.

Camber and Caster

Access holes to loosen upper control arm cam bolt nuts have been provided for in the fender side shields (Fig. 3) of the Satellite vehicles. The front access hole is made available by removing splash cover tapping screws and cover.

(1) Prepare vehicle for measuring wheel alignment.

(2) Remove all foreign material from exposed threads of cam adjusting bolts.

(3) Record initial camber and caster readings before loosening cam bolt nuts.

(4) Camber settings should be held as close as possible to the "preferred" setting. Caster should be held as nearly equal as possible on both wheels. See specifications at rear of group.

Toe-In

The toe setting should be the final operation of the front wheel alignment adjustments. The front wheels

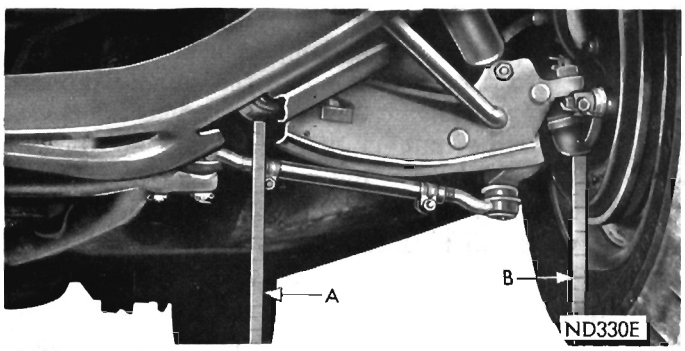

Fig. 2—Measuring Front Suspension Height

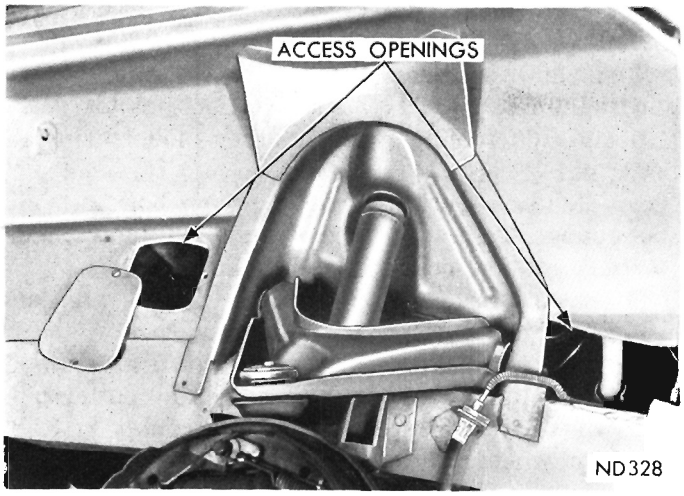

Fig. 3—Access Opening in Fender Shield

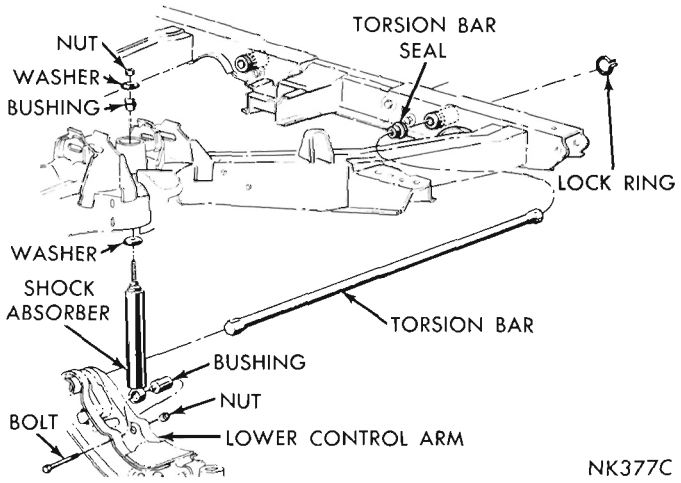

Fig. 4—Torsion Bar

must be in a straight ahead position. Follow the equipment manufacturers procedure. The steering wheel should also be centered during this operation.

Turning the tie rod sleeve will "center" the steering wheel spokes. If the steering wheel was centered, make the toe-in adjustment by turning both sleeves an equal amount.

Tighten adjusting sleeve clamp bolt nuts 115 inch-pounds (Valiant, Satellite). (Fury models 150 inch-pounds). **Make sure clamp bolt nuts are on the bottom.**

TORSION BAR

The torsion bars are **not** interchangeable side for side. The bars are marked either right or left by an "R" or an "L" stamped on one end of the bar.

Removal

(1) Remove upper control arm rebound bumper.

(2) If vehicle is to be raised on a hoist, make sure it is lifted on body only so that front suspension is in full rebound (under no load). If vehicle is to be raised on jacks, placed under center of crossmember **it will be necessary that, a support first be placed between the crossmember and the jack.**

(3) Release all load from torsion bar (Fig. 4) by turning anchor adjusting bolt (Fig. 5) counterclockwise.

(4) Remove lock ring from torsion bar rear anchor (Fig. 4).

(5) Using Tool C-3728, remove torsion bar (Fig. 5) from its anchors. It is advisable to place Tool C-3728 toward rear of torsion bar to allow sufficient room for striking the striking pad of tool. **Do not apply heat to torsion bar, front anchor or rear anchor.**

(6) Remove tool and slide rear anchor balloon seal from anchor to facilitate removal of torsion bar.

(7) Remove torsion bar by sliding bar out through rear of anchor. Use care not to damage balloon seal when it is removed from torsion bar.

Inspection

(1) Inspect balloon seal for damage and replace if necessary.

(2) Inspect torsion bar for scores and nicks. Dress down all scratches and nicks to remove sharp edges, then paint repaired area with a good rust preventative.

(3) Remove all foreign material from hex openings in anchors and from hex ends of torsion bars.

(4) Inspect adjusting bolt and swivel and replace if any corrosion or other damage is noted. Lubricate for easy operation.

Installation

(1) Insert torsion bar through rear anchor.

(2) Slide balloon seal over torsion bar (cupped end toward rear of bar).

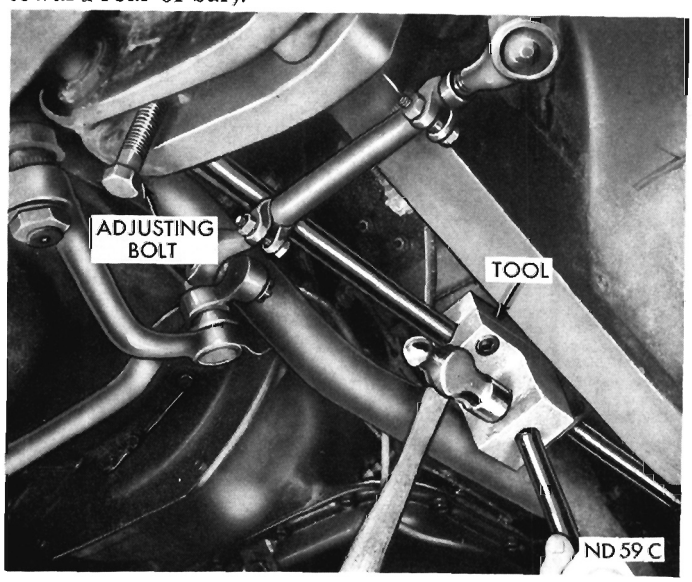

Fig. 5—Removing Torsion Bar

(3) Coat both hex ends of torsion bar with Multi-Mileage Lubricant or equivalent.

(4) Slide torsion bar into hex opening of lower control arm.

(5) Install lock ring in rear anchor.

(6) Pack the annular opening in rear anchor completely full of Multi-Mileage Lubricant or equivalent.

(7) Position balloon seal on rear anchor so lip of seal engages with groove in anchor.

(8) Turn adjusting bolt clockwise to place a load on torsion bar.

(9) Lower vehicle to floor and adjust front suspension height.

(10) Install upper control arm rebound bumper and tighten nut 200 inch-pounds.

STEERING KNUCKLES

ON MODELS EQUIPPED WITH DISC BRAKES, REFER TO GROUP 5 FOR BRAKE DISC REMOVAL AND INSTALLATION PROCEDURES.

Removal

(1) Remove upper control arm rebound bumper.

(2) Raise vehicle so front suspension is in full rebound (under no load).

(3) Remove wheel, tire and drum as an assembly.

(4) Remove all load from torsion bar by turning adjusting bolt counterclockwise.

(5) Remove tie rod end from steering knuckle using Tool C-3894.

(6) Remove upper ball joint stud from steering knuckle using Tool C-3711 (on Fury Models use Tool C-3964). It may be necessary to add approximately 7/16 inch of flat washers over lower ball joint stud to allow the use of Tool C-3711 without damaging threads on lower ball joint stud. Place Tool C-3711 over stud. Turn threaded portion of tool locking it securely against the upper stud (Fig. 22). To use Tool C-3711 as outlined, it may be necessary to modify the tool (Fig. 24). Spread tool enough to place upper stud under a load, then strike steering knuckle sharply with a hammer to loosen stud. Do not attempt to force stud out of steering knuckle with tool alone.

(7) Remove two upper bolts attaching steering knuckle to brake support.

(8) Remove two lower bolts attaching steering arm to steering knuckle and remove steering knuckle. **Support the brake assembly during this operation to prevent damage to brake hose when lower bolts are removed.**

Installation

(1) Position steering knuckle on brake support and install upper mounting bolts and nuts. Tighten nut finger tight only.

(2) Position steering knuckle arm on steering knuckle and install mounting bolts and nuts finger tight only.

(3) Install upper ball joint stud in steering knuckle and tighten ball joint stud nut 55 foot-pounds (Valiant) and 100 foot-pounds (all other models). Install cotter pin.

(4) Tighten steering knuckle upper bolt nuts 55 foot-pounds. Tighten lower bolt nuts 100 foot-pounds (Valiant) 120 foot-pounds (Satellite-Fury).

(5) Place a load on the torsion bar by turning adjusting bolt clockwise.

(6) Install tie rod end in steering knuckle arm and install nut, tighten 40 foot-pounds. Install cotter pin.

(7) Install wheel, tire and drum assembly and adjust front wheel bearings (Group 22).

(8) Lower vehicle to floor and install upper control arm rebound bumper. Tighten nut 200 inch-pounds.

(9) Measure and adjust front suspension heights and wheel alignment as necessary.

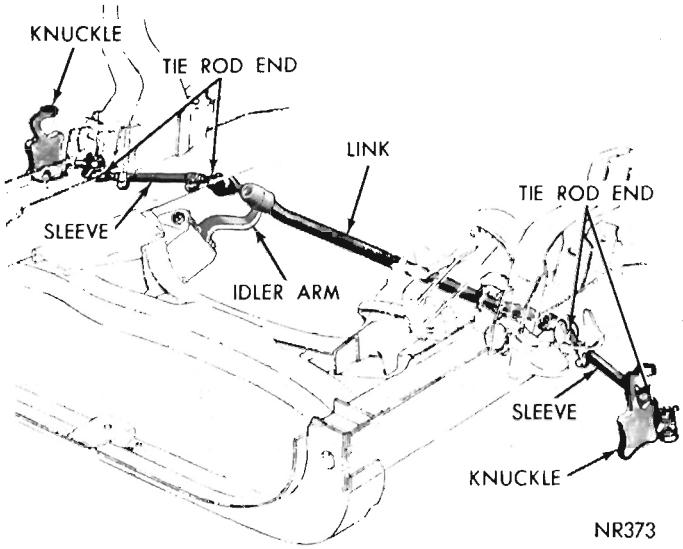

Fig. 6—Steering Linkage (Valiant-Barracuda)

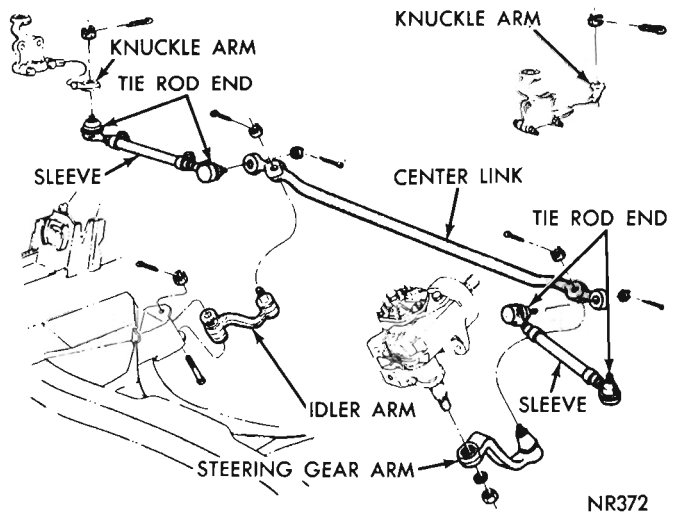

Fig. 6—Steering Linkage (Valiant-Barracuda)

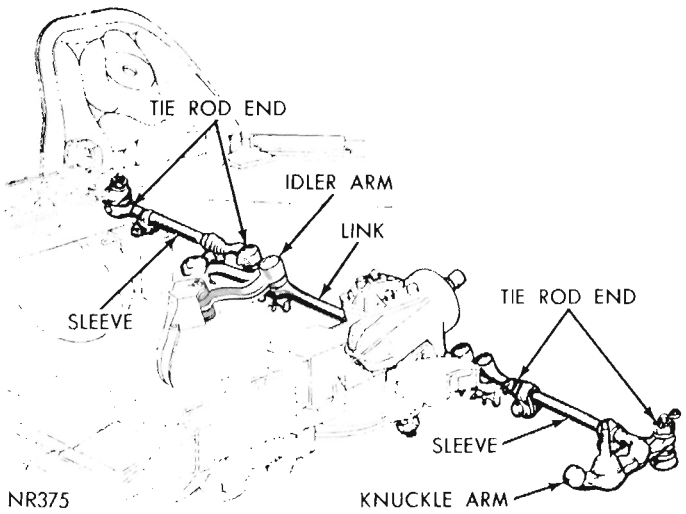

Fig. 7—Steering Linkage (Satellite)

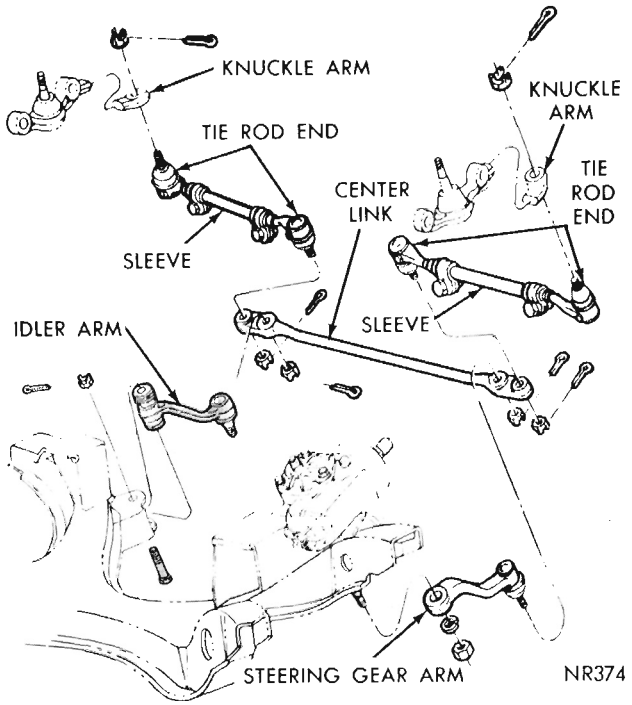

Fig. 7—Steering Linkage (Satellite)

STEERING LINKAGE (Figs. 6, 7 and 8)

The tie rod end seals should be inspected for damage at all oil change periods.

Removal

Removal of tie rod ends from the steering knuckle arm or center link by methods other than using Tool C-3894 will damage tie rod end seal.

When removing tie rod ends, idler arm or steering gear arm, all seals should be closely inspected for wear or damage. The tie rod ends are of the semi-permanently lubricated type.

Damaged seals require removal of the seals and inspection of the tie rod assembly end at the throat

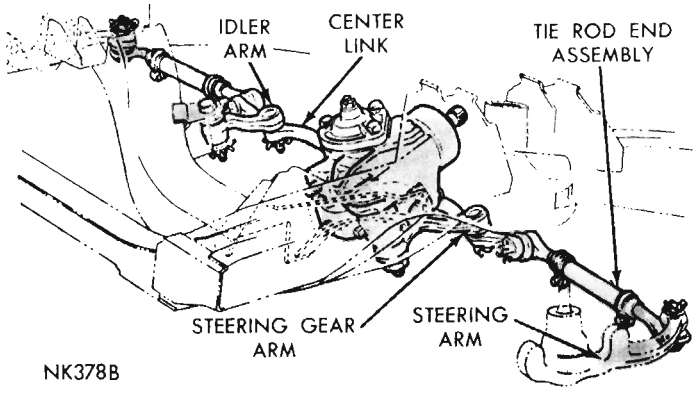

Fig. 8—Steering Linkage (Fury)

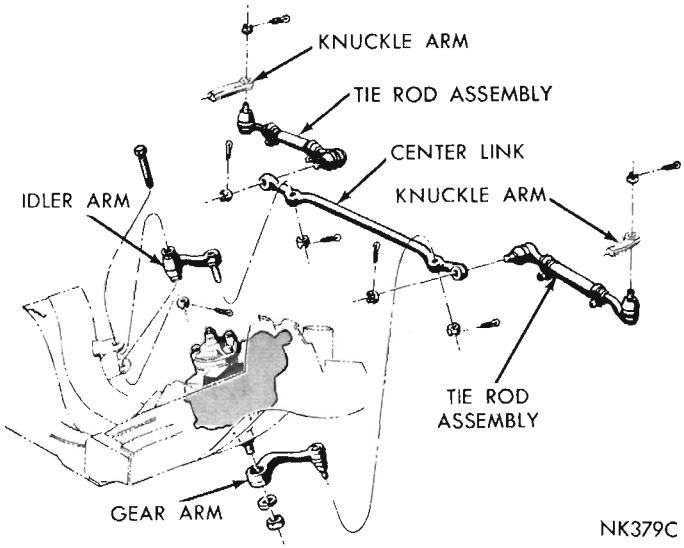

Fig. 8—Steering Linkage (Fury)

opening. If the parts have not lost all the lubricant or are not contaminated, worn or rusted, use new seals and reinstall, otherwise, a new complete tie rod end assembly should be installed. Lubricate the tie rod end assembly with special long-life chassis greases such as Multi-Mileage Lubricant, Part Number 2525035 intended for this purpose.

(1) Remove tie rod ends from steering knuckle arms (Fig. 9). **Use care not to damage seals.**

(2) Remove inner tie rod ends from center link.

(3) Remove idler arm stud from center link.

(4) Remove idler arm bolt from crossmember bracket.

(5) Remove steering gear arm stud from center link.

(6) Remove steering gear arm from gear.

Installation

Replace all tie rod and steering arm assemblies that are damaged or worn.

(1) Position idler arm assembly in bracket and install bolt. Tighten nut 65 foot-pounds and install cotter pin.

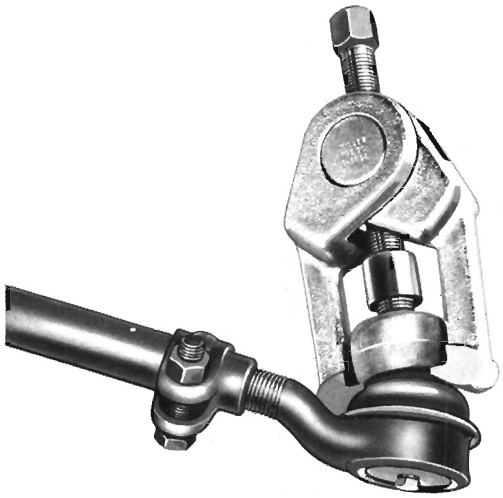

Fig. 9—Removing Tie Rod End Stud from Steering Knuckle Arm

(2) Place center link over idler arm and steering gear arm studs and tighten nuts 40 foot-pounds. Install cotter pins.

(3) Connect tie rod ends to steering knuckle arms and centerlink. Tighten nuts 40 foot-pounds and install cotter pins.

(4) Measure and adjust front wheel toe.

SWAY BAR (Figs. 10, 11 and 12)

Removal—Valiant—Satellite

(1) Loosen and remove upper link nut, retainer and rubber insulator on both sides.

(2) Loosen and remove bolts attaching both brackets to front crossmember.

(3) Remove sway bar from vehicle.

(4) Loosen and remove nuts, retainers and rubber insulators and remove links from lower control arm bracket.

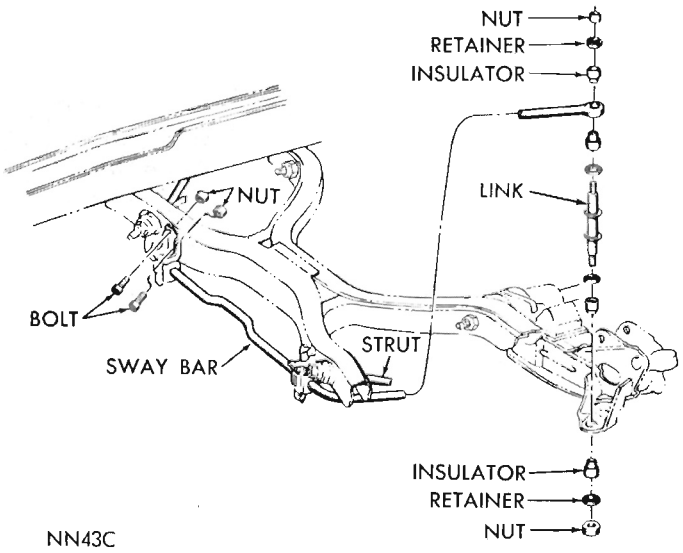

Fig. 10—Sway Bar Assembly (Valiant-Barracuda)

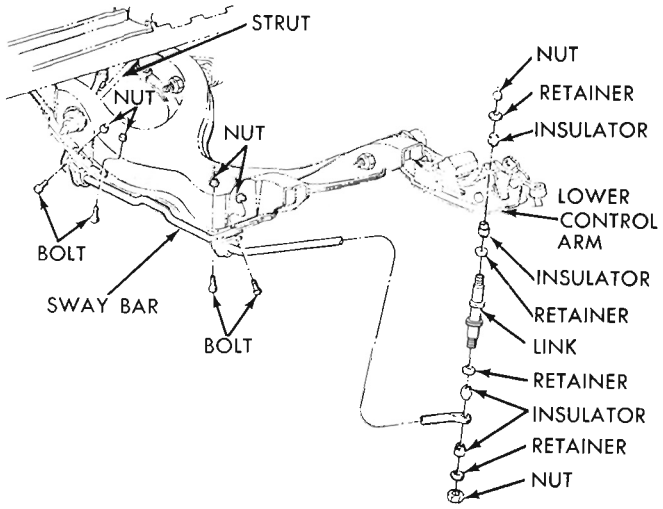

Fig. 11—Sway Bar Assembly (Satellite)

bracket.

(5) If the rubber insulator bushings show excessive wear or deterioration of rubber, install new bushings.

The sway bar cushions are not serviced separately. If replacement is necessary, install a new sway bar assembly.

Installation—Valiant—Satellite

(1) Position link with retainer and rubber insulator in lower control arm bracket, followed by rubber insulator and retainer (concave side toward rubber insulator) and nut. Tighten nut to 100 inch-pounds.

(2) Position sway bar assembly in vehicle and install attaching bolts and nuts and tighten to 200 inch-pounds.

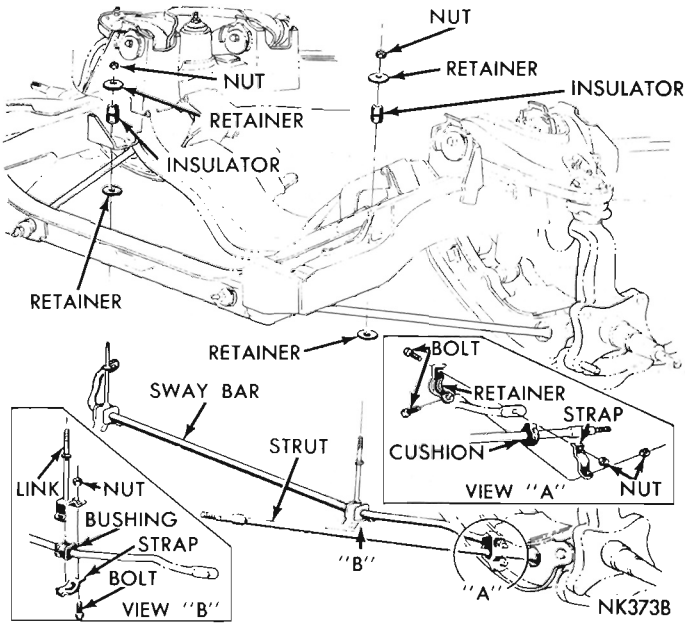

Fig. 12—Sway Bar Assembly (Fury)

(3) Install retainer on link, followed by rubber insulator and sway bar. Using a screwdriver or pinch bar between strut and sway bar, if necessary apply pressure and install upper rubber insulator, retainer and nut, tighten nuts 100 inch-pounds.

Removal—Fury

(1) Remove two sway bar link retaining nuts and concave retainers.

(2) Remove two sway bar cushion retaining nuts, lockwashers, straps, and bolts, (one to each strut). Slide sway bar out through control arm struts and away from vehicle. **The sway bar bushings are not serviced separately. If replacement is necessary, install a new sway bar assembly. Remove lower concave retainers.**

(3) Remove sway bar link insulators from frame bracket. If insulators are worn or deteriorated, install new insulators as required.

Installation

(1) Dip sway bar link insulators in water and install in opening in frame bracket, using a twisting motion. When installed properly, groove in insulator will index with opening in frame bracket.

(2) Thread sway bar into position over top of lower control arm struts.

(3) Engage sway bar cushion brackets with struts and install straps, bolts, lockwashers and nuts. Tighten to 30 foot-pounds.

(4) Install retainers over ends of links (concave side up), then slide links up through insulators. Install retainers (concave side down) over ends of links and down on insulators. Install nuts and tighten to 100 inch-pounds.

LOWER CONTROL ARM AND SHAFT (Figs. 13, 14 and 15)

Removal

ON MODELS EQUIPPED WITH DISC BRAKES, REFER TO GROUP 5 FOR BRAKE DISC REMOVAL AND INSTALLATION PROCEDURES.

(1) Remove the wheel, tire and drum as an assembly.

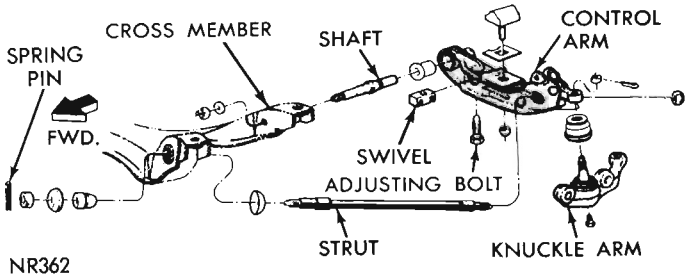

Fig. 13—Lower Control Arm (Valiant-Barracuda)

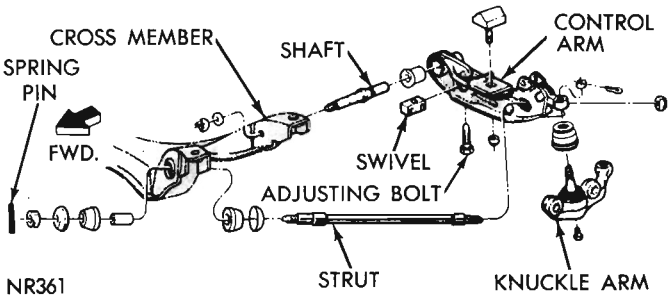

Fig. 14—Lower Control Arm (Satellite)

(2) Remove lower shock absorber attaching bolt and push up and out of way, and remove torsion bar from lower control arm.

(3) Remove tie rod end from steering knuckle arm using Tool C-3894 (Fig. 9). **Use care not to damage seal.**

(4) Remove sway bar to strut strap (Fury Models) or remove sway bar link from lower control arms (Valiant, Satellite).

(5) Remove steering knuckle arm to brake support bolts and remove steering knuckle arm. Move brake support assembly out of way.

(6) Remove ball joint stud from lower control arm using Tool C-3964 (Fig. 16). The bottom portion of tool must be positioned between seal and control arm to avoid seal damage.

(7) Remove strut spring pin, front nut and bushing retainer (Fig. 11) from forward end of crossmember.

(8) Remove nut and washer from lower control arm shaft.

(9) Tap end of lower control arm shaft with a "soft end" hammer to aid in removal of shaft from crossmember.

(10) Remove lower control arm, shaft and strut as an assembly.

(11) Remove strut bushing from crossmember only if damaged. All models (except Valiant) use a two piece bushing and sleeve arrangement (Figs. 17 and 18).

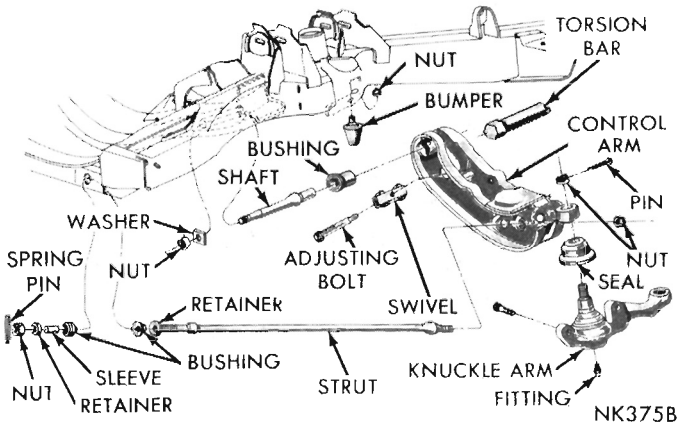

Fig. 15—Lower Control Arm (Fury)

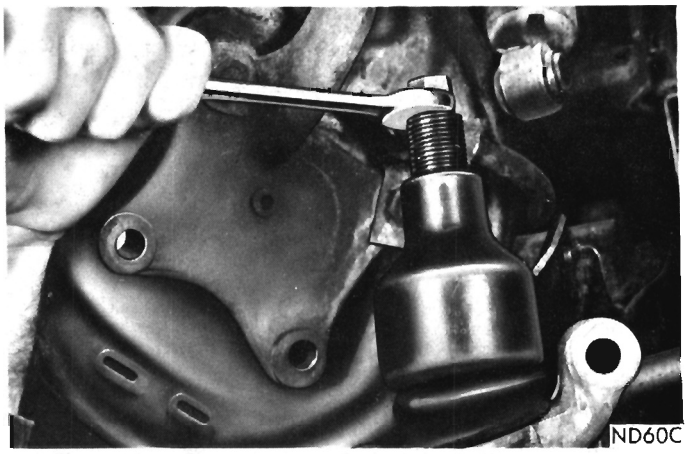

Fig. 16—Removing Lower Ball Joint Stud

(12) Remove strut bushing inner retainer from strut.

Disassembly

(1) Place strut portion of control arm assembly in a vise and remove strut nut.

(2) Remove strut from control arm.

(3) Remove torsion bar adjusting bolt and swivel.

(4) Place lower control arm assembly in an arbor press with torsion bar hex opening up and with a support under outer edge of control arm.

(5) Place a brass drift into hex opening and press shaft out of lower control arm. The bushing inner shell will remain on shaft.

(6) Cut and remove rubber portion of bushing from control arm shaft.

(7) Remove bushing outer shell by cutting with a chisel. **Use care not to cut into control arm.**

(8) Remove bushing inner shell from pivot shaft. Cut off if necessary.

Assembly

(1) Position new bushing on shaft (flange end of bushing first). Press shaft into inner sleeve until bushing seats on shoulder of shaft.

(2) Press shaft and bushing assembly into lower control arm using Tool C-3848 and an arbor press. (Fury Models use Tool C-3556). In some instances

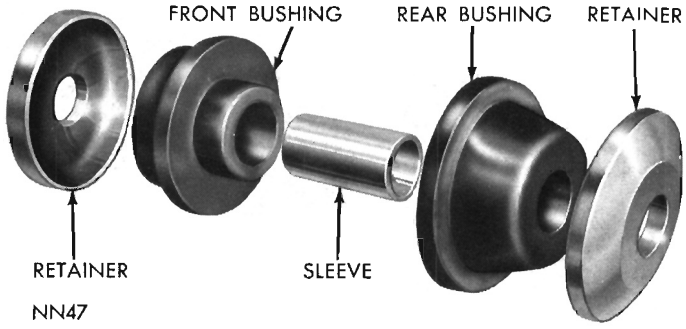

Fig. 17—Strut Crossmember Bushings (Satellite)

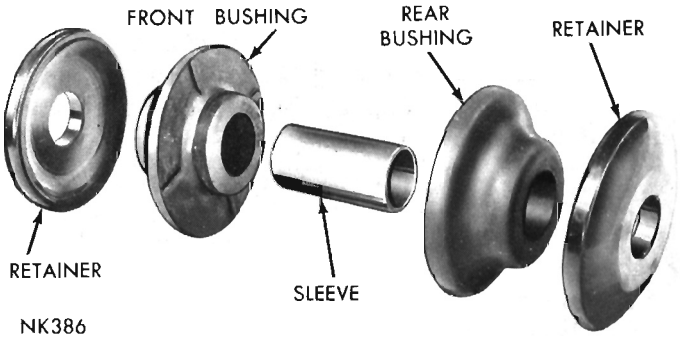

Fig. 18—Strut Crossmember Bushings (Fury)

it may be necessary to reduce the diameter of shaft shoulder to facilitate use of tool.

(3) Install torsion bar adjusting bolt and swivel.

(4) Position strut in lower control arm and tighten nut 110 foot-pounds (Fury), 100 foot-pounds (Valiant and Satellite).

Installation

(1) On Valiant models, install new strut bushing in crossmember with a twisting motion. Water may be used as a lubricant to aid in installation.

(2) Place strut bushing inner retainer on strut and install lower control arm, shaft, and strut assembly. Install strut, strut bushing outer retainer and nut finger tight only.

(3) On Plymouth models, position front strut bushing half and sleeve into crossmember. Place rear retainer and rear strut bushing on strut and position control arm, shaft and strut assembly into crossmember. Install strut bushing outer retainer and nut finger tight only.

(4) Install lower control arm shaft washer and nut finger tight only.

(5) Position lower ball joint stud into lower control arm and tighten nut 100 foot-pounds (Fury Models 115 foot-pounds). Install cotter pin.

(6) Position brake support on steering knuckle and install two upper bolts and nuts finger tight only.

(7) Position steering knuckle arm on steering knuckle and install two lower bolts and nuts.

(8) Tighten upper bolt nuts 55 foot-pounds. Tighten lower bolt nuts 100 foot-pounds (Valiant) 120 foot-pounds (Satellite-Fury).

(9) Inspect tie rod end seal and replace if damaged. Connect tie rod end to steering knuckle arm and tighten nut 40 foot-pounds. Slide tie rod end seal protector over tie rod end and install cotter pin.

(10) Connect shock absorber to control arm and tighten finger tight only. (Valiant install bolt from rear only).

(11) Install wheel, tire and drum assembly and adjust front wheel bearing (Group 22).

(12) Lower vehicle to floor, adjust front suspension heights and tighten strut nut, at crossmember 40 foot-

pounds and install strut spring pin Valiant (50 foot-pounds Satellite and Fury models). Tighten shock absorber nut 50 foot-pounds.

(13) Tighten lower control arm shaft nut 130 foot-pounds (Fury 180 foot-pounds).

(14) Measure and adjust front wheel alignment as necessary.

LOWER CONTROL ARM STRUT

Removal

(1) Remove lower control arm, shaft and strut as an assembly.

(2) Remove nut holding strut to lower control arm and remove strut from control arm.

(3) Inspect strut bushings (Figs. 17 and 18). If bushings are worn or deteriorated, install new bushings.

Installation

(1) Install new strut bushings, if necessary.

(2) Position strut into control arm and tighten nut 110 foot-pounds (Fury) 100 foot-pounds (Valiant and Satellite).

(3) Position strut bushing inner retainer on strut and position control arm shaft and strut assembly into crossmember. Install strut front bushing, sleeve and retainer. Tighten nut finger tight only.

(4) Install control arm pivot shaft washer and nut finger tight only.

(5) Connect shock absorber to lower control arm and tighten nut finger tight only.

(6) Lower vehicle to floor so full weight is on its wheels.

(7) Adjust front suspension heights to specifications.

(8) Tighten front strut nut 40 foot-pounds Valiant, (50 foot-pounds Satellite and Fury), install strut spring pin. Tighten pivot shaft nut 130 foot-pounds Valiant and Satellite (180 foot-pounds Fury models). Tighten shock absorber nut 50 foot-pounds Valiant and Satellite (55 foot-pounds Fury models).

(9) Adjust front wheel alignment as necessary.

LOWER BALL JOINTS

ON MODELS EQUIPPED WITH DISC BRAKES, REFER TO GROUP 5 FOR BRAKE DISC REMOVAL AND INSTALLATION PROCEDURES.

Inspection

(1) Raise the front of vehicle and install safety floor stands under both lower control arms as far outboard as possible. The upper control arms must not contact the rubber rebound bumpers.

(2) With the weight of vehicle on the control arm, install dial indicator and clamp assembly to lower control arm (Fig. 19).

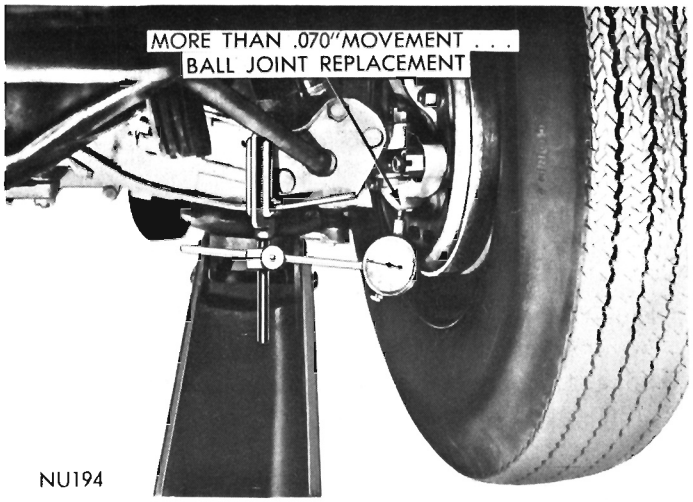

Fig. 19—Measuring Lower Ball Joint Axial Travel

(3) Position dial indicator plunger tip against ball joint housing assembly and zero dial indicator.

(4) Measure axial travel of the ball joint housing arm with respect to the ball joint stud, by raising and lowering the wheel using a pry bar under the center of the tire.

(5) If during measurement you find the axial travel of the housing arm is .070" or more, relative to the ball joint stud, the ball joint should be replaced.

Removal

The lower ball joint is integral with the steering arm and is not serviced separately. Compression type lower ball joints are used on all models.

(1) Remove upper control arm rebound bumper.

(2) Raise vehicle so front suspension is in full rebound. Remove all load from torsion bar by turning adjusting bolt counterclockwise. If jacks are used to raise vehicle it is essential that a support be used between the crossmember and jack.

(3) Remove wheel, tire and drum as an assembly. It may be necessary to back-off the brake shoes to facilitate removal of drum assembly.

(4) Remove two lower bolts from the brake support attaching steering arm and ball joint assembly to steering knuckle.

(5) Remove tie rod end from steering arm using Tool C-3894. **Use care not to damage seal.**

(6) Using Tool C-3964 remove ball joint stud from lower control arm (Fig. 16), and remove steering arm and ball joint assembly.

Installation

(1) Place a new seal over ball joint (if necessary) and using a 1-7/8 inch socket press retainer portion of seal down on ball joint housing until it is securely locked in position (Valiant, Satellite use Tool C-4039).

(2) Position steering arm and ball joint assembly on steering knuckle and install two mounting bolts. Tighten nuts 100 foot-pounds (Valiant), 120 foot-pounds (Belvedere-Satellite-Fury).

(3) Insert ball joint stud into opening in lower control arm.

(4) Install stud retaining nut and tighten 100 foot-pounds, (Fury models 115 foot-pounds). Install cotter pin and lubricate ball joint, see Lubrication Section Group "O".

(5) Inspect tie rod seal for damage and replace if damaged. Connect tie rod end to steering knuckle arm, tighten nut 40 foot-pounds, and install cotter pin.

(6) Place a load on torsion bar by turning adjusting bolt clockwise.

(7) Install wheel, tire and drum assembly and adjust front wheel bearing (Group 22).

(8) Lower vehicle to floor, install upper control arm rebound bumper and tighten nut 200 inch-pounds.

(9) Measure front suspension height and adjust if necessary.

(10) Measure front wheel alignment and adjust if necessary.

UPPER CONTROL ARM (Figs. 20, 21 and 22)

Removal and Disassembly

(1) Place a jack under lower control arm as close to wheel as possible and raise vehicle until wheel clears floor.

(2) Remove wheel and tire as an assembly.

(3) On Valiant and Satellite models, remove upper and lower ball joint stud nuts using Tool C-3711. On Valiant models, it may be necessary to add approximately 7/16 inch of flat washers over lower ball joint stud to allow the use of Tool C-3711 without damaging threads on lower ball joint stud. Place Tool C-3711 over stud. Turn threaded portion of tool locking it securely against the upper stud (Fig. 23).

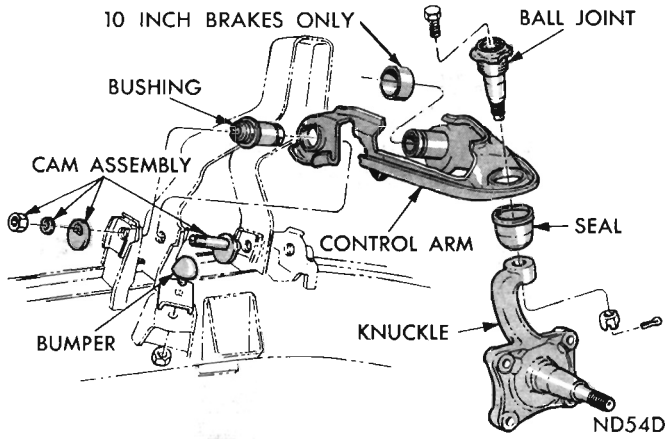

Fig. 20—Upper Control Arm (Valiant-Barracuda)

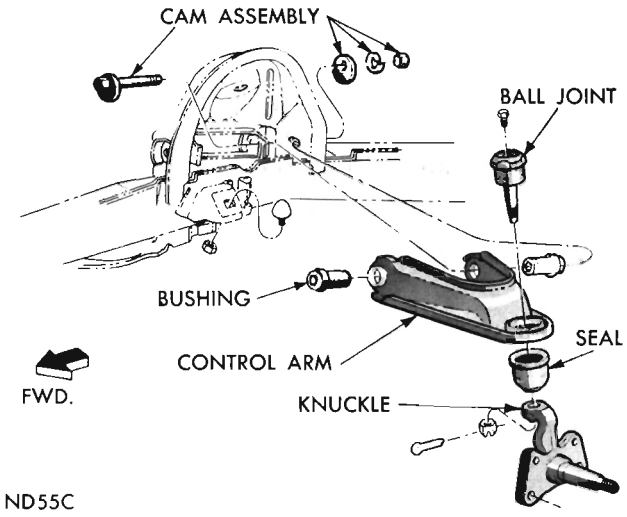

Fig. 21—Upper Control Arm (Satellite)

To use Tool C-3711 as outlined, it may be necessary to modify the tool (Fig. 24).

(4) Spread tool enough to place upper stud under a load, then strike steering knuckle sharply with a hammer to loosen stud. **Do not attempt to force stud out of steering knuckle with tool alone.**

(5) On Fury models, remove upper ball joint nut and remove stud from steering knuckle using Tool C-3964.

(6) Remove nuts, lockwashers, cams and cam bolts attaching upper control arm and bushings (Figs. 20, 21, 22) to support brackets. Lift control arm up and away from support.

(7) Remove ball joint (Fig. 25) using Tool C-3560

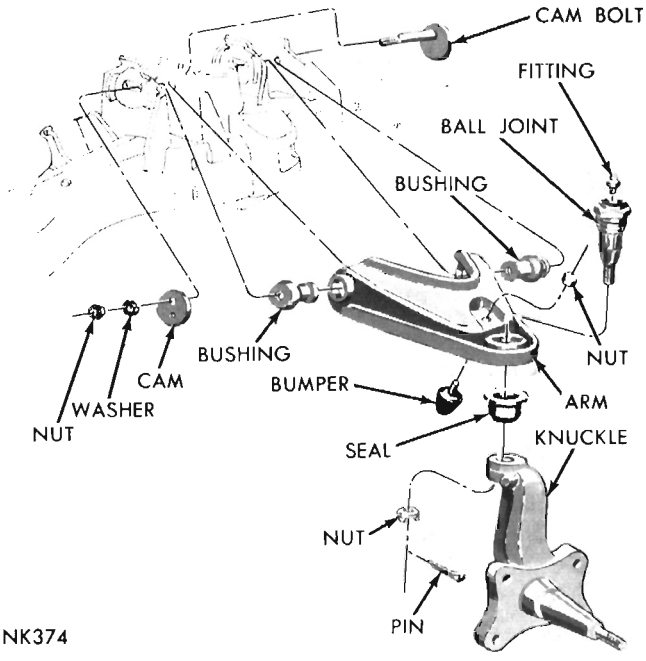

Fig. 22—Upper Control Arm (Fury)

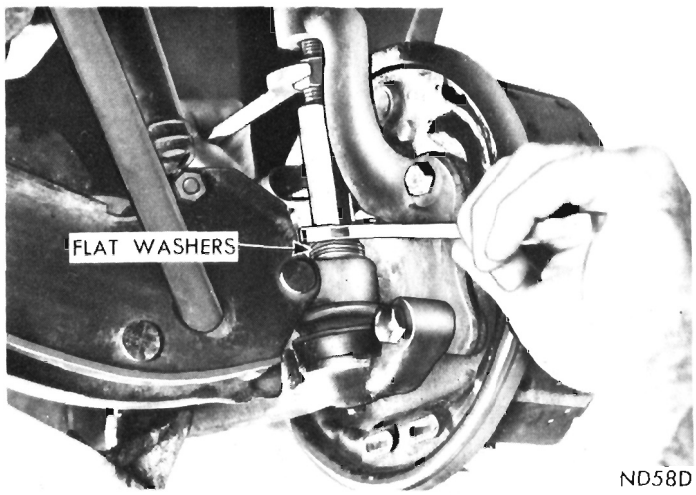

Fig. 23—Removing Upper Ball Joints Stud (Valiant-Barracuda)

(Tool C-3714 Valiant). The seal will come off as ball joint is removed.

(8) Assemble Tool C-3710A (Tool C-3962 Fury) over bushing and press bushing out of arm (from inside out) (Fig. 26). **To remove upper control arm rear bushing support sleeve (used on Valiant models with 10 inch front brakes and Satellite police and taxi application) assemble Tool C-3710A using adaptor SP-3826 in place of adaptor SP-3088, over bushing and press bushing out of arm (Fig. 26).**

Assembly

When installing new bushings, be sure control arm is supported squarely at point where bushing is being pressed in. **Do not use oil or grease to aid in installation.**

(1) Position flange end of new bushing in Tool C-3710A, (Tool C-3962 Fury) support control arm squarely, and press bushings into control arm (from outside) until tapered portion of bushing seats on the arm. **On Valiant models with 10 inch front brakes and Satellite police and taxi application (using bushing support sleeve) remove Tool C-3710A after bushing has been installed and install adaptor SP-3827 in place of SP-3233A cup on tool and install support sleeve on rear bushing only (Fig. 27).**

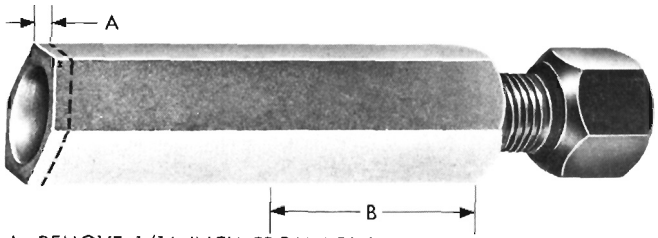

A. REMOVE 1/16 INCH FROM LOWER PART OF TOOL.
B. ROUND OFF PORTION OF THE TOOL THAT IS POSITIONED NEXT TO THE STEERING KNUCKLE ARM.

ND 127

Fig. 24—Tool C-3711 Modified

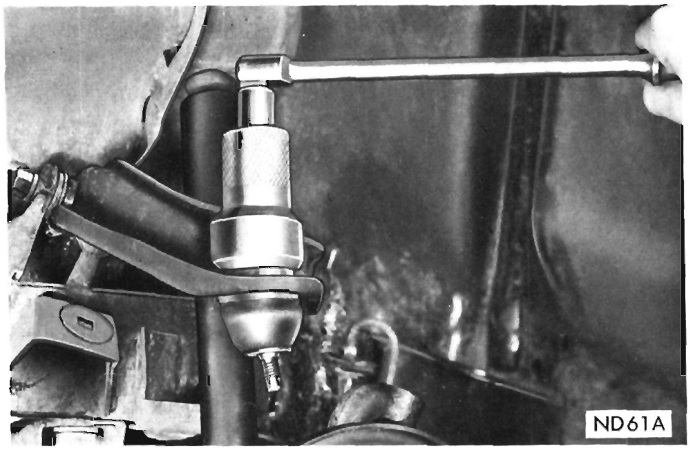

Fig. 25—Removing or Installing Upper Ball Joint

(2) Install ball joint into arm using Tool C-3560 (Tool C-3714 Valiant). Tighten until seated (125 foot-pounds minimum). The ball joint will cut threads into a new arm during tightening operations.

(3) Install a new ball joint seal using a 2″ socket, making sure it is seated fully on ball joint housing. On Valiant Models install seal using Tool C-4039.

Installation

(1) Slide control arm into position and install cam bolts, cams, washers and nuts (Figs. 20, 21 and 22). Tighten nuts in preparation for final adjustments.

(2) Slide upper ball joint stud into position in steering knuckle and install nut. Tighten nut 100 foot-pounds, (Valiant 55 foot-pounds). Install cotter pin and lubricate ball joint. Tighten lower stud nut 100 foot-pounds (Fury 115 foot-pounds).

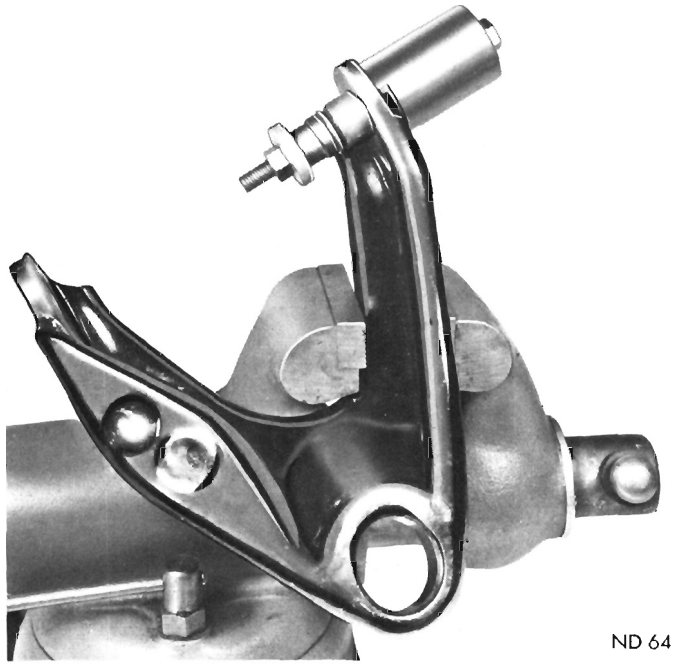

Fig. 26—Removing Upper Control Arm Bushing

(3) Install wheel and tire. Adjust wheel bearing (Group 22).

(4) Measure and adjust vehicle height and wheel alignment. Tighten cam bolt nuts 65 foot-pounds.

UPPER BALL JOINTS

ON MODELS EQUIPPED WITH DISC BRAKES, REFER TO GROUP 5 FOR BRAKE DISC REMOVAL AND INSTALLATION PROCEDURES.

Removal

(1) Raise vehicle by placing a jack under lower control arm as close as possible to wheel.

(2) Remove wheel, tire and drum.

(3) On Satellite and Valiant Models, remove upper and lower ball joint stud nuts. On Valiant models, it will be necessary to add approximately 7/16″ of flat washers over lower ball joint stud to allow the use of Tool C-3711 without damaging threads on lower ball joint stud. Place Tool C-3711 over studs. Turn threaded portion of tool locking it securely against upper stud (Fig. 23). To use Tool C-3711 as outlined it will be necessary to modify it, as shown in Figure 24.

(4) Spread tool enough to place upper stud under a load, then strike steering knuckle sharply with a hammer to loosen stud. **Do not attempt to force stud out of steering knuckle with tool alone.**

(5) **On Fury Models,** remove upper ball joint stud nut and remove stud from control arm using Tool C-3964.

(6) Remove tool, then remove ball joint stud from steering knuckle.

(7) Using Tool C-3560, (Tool C-3714 Valiant) unscrew ball joint from upper control arm (Fig. 25). The seal will come off as ball joint is being removed.

Installation

When installing a ball joint, make certain the ball joint threads engage those of the control arm squarely if original arm is being used. Balloon type seals should always be replaced once they have been removed.

(1) Screw ball joint squarely into control arm as far as possible by hand.

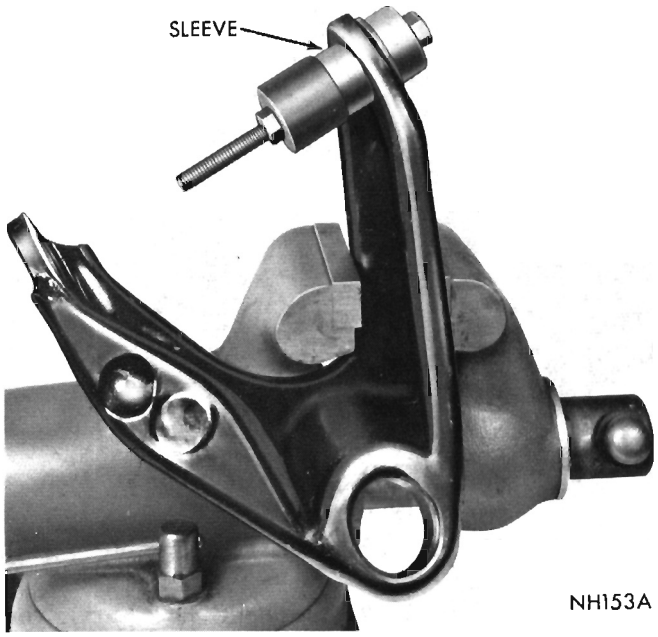

Fig. 27—Installing Support Sleeve on Bushing

(2) Using Tool C-3560 (Tool C-3714 Valiant) tighten ball joint until it bottoms on housing. Tighten to a minimum of 125 foot-pounds.

If ball joint cannot be torqued to 125 foot-pounds, inspect threads on ball joint and also in control arm and replace as necessary.

(3) Position a new seal over ball joint stud and install using a 2″ socket making sure it is seated fully on ball joint housing. On Valiant Models, install seal using Tool C-4039.

(4) Position ball joint stud in steering knuckle and install a retaining nut.

(5) Tighten nut 100 foot-pounds, (Valiant 55 foot-pounds). Install cotter pin, lubricate ball joint.

(6) Install lower ball joint stud nut and tighten 100 foot-pounds, (Fury 115 foot-pounds).

(7) Install wheel, tire and drum assembly and adjust front wheel bearings (Group 22).

(8) Lower vehicle and adjust front suspension height.

SPECIFICATIONS

MODEL	BARRACUDA	VALIANT	SATELLITE	FURY
CAMBER—Left		+1/4° To +3/4° (Preferred +1/2°)		
—Right		0° To +1/2° (Preferred +1/4°		
CASTER—Manual Steering		0° to −1° (−1/2° Preferred)		
—Power Steering (All models except Fury)		+1/4° to +1-1/4° (+3/4° Preferred)		
—Power Steering Fury models only		0° to −1° (−1/2° Preferred)		
HEIGHT (Inches) Standard & Heavy Duty	1-3/8 ± 1/8	2-1/8±1/8	1-7/8±1/8	1-3/8±1/8
Side to Side Difference (Max.)			1/8	
STEERING AXIS INCLINATION			7-1/2°	
TOE-IN		3/32 inch to 5/32 inch (Preferred 1/8 inch)		

MODEL	BARRACUDA	VALIANT	SATELLITE	FURY	
TOE-OUT ON TURNS (When inner wheel is 20°) outer wheel is		17.5	17.8	18.8	
TORSION BARS					
Length (inches)		35.8	41	44	
Diameter (inches)—Std. Suspension (6 cyl.)		0.83	0.86	0.96	
W/Air Conditioning		0.85	0.86	0.96	
273 C. I. Engine		0.85	—	—	
W/Air Conditioning		0.87	—	—	
318, 340 C. I. Engine		0.87	0.88	0.98	
383 C. I. Engine		0.89	0.88	0.94	
Police, 426 & 440 Engine		—	0.92	0.98	
Heavy Duty Suspension		0.87	0.90	0.98	
Station Wagons		—	0.86	0.94	
TREAD (inches) Front		57.4	59.5	62.0	
Rear		55.5	59.2	60.7	**63.4
WHEEL BASE (inches)		108	116	119	
** Fury Station Wagon				**121	

TIGHTENING REFERENCE

	Foot Pounds	Inch Pounds
Ball Joint—Upper	125 (Min.)	
Nut—Lower (Except Fury)	100	
(Fury)	115	
—Upper (Except Valiant)	100	
(Valiant)	55	
Control Arm		
Pivot Shaft Nut (Except Fury)	130	
(Fury)	180	
Rebound Bumpers		200
Crossmember Bolts	150	
Engine Mounting Bolts	85	
Idler Arm Nuts		
at Center Link	40	
at Mounting Bracket	65	
Shock Absorber Nuts—Front		
Lower	50	
Upper	25	
Steering Gear Mounting Bolts	80	
Steering Knuckle Bolt Nuts		
Lower (except Valiant)	120	
(Valiant)	100	
Disc Brakes	115	
Upper	55	
Strut Nuts		
Front (Valiant)	40	
(Satellite-Fury)	50	
Rear	110	
Sway Eliminator Shaft		
Cushion Retainer Bolt Nut		
(Fury)	30	
Frame Bracket Bolt Nut		
(Valiant-Satellite)		200
Link Insulator Retainer Bolt Nut		100
Tie Rod Ends		
Sleeve Clamp Bolt Nut (Except Fury)		115
(Fury)		150
Stud Nuts	40	
Wheel Nuts		
Except Valiant-Barracuda	65	
Valiant-Barracuda	55	

REAR AXLE

CONTENTS

	Page		Page
REAR AXLE ASSEMBLY (7¼") RING GEAR	2	SERVICE DIAGNOSIS	1
REAR AXLE ASSEMBLY (8¾") RING GEAR	12	SPECIFICATIONS	46
REAR AXLE ASSEMBLY (9¼" AND 9¾") RING GEAR	29	SURE-GRIP DIFFERENTIAL	43
		TIGHTENING REFERENCE	48

SERVICE DIAGNOSIS

Condition	Possible Cause	Correction
REAR WHEEL NOISE	(a) Wheel loose.	(a) Tighten loose wheel nuts.
	(b) Spalled wheel bearing cap or cone.	(b) Check rear wheel bearings. If spalled or worn, replace.
	(c) Defective, brinelled wheel bearing.	(c) Defective or brinelled bearings must be replaced. Check rear axle shaft end play.
	(d) Excessive axle shaft end play.	(d) Readjust axle shaft end play.
	(e) Bent or sprung axle shaft flange.	(e) Replace bent or sprung axle shaft.
SCORING OF DIFFERENTIAL GEARS AND PINIONS	(a) Insufficient lubrication.	(a) Replace scored gears. Scoring marks on the pressure face of gear teeth or in the bore are caused by instantaneous fusing of the mating surfaces. Scored gears should be replaced. Fill rear axle to required capacity with proper lubricant. See Specification section.
	(b) Improper grade of lubricant.	(b) Replace scored gears. Inspect all gears and bearings for possible damage. Clean out and refill axle to required capacity with proper lubricant. See Lubrication section.
	(c) Excessive spinning of one wheel.	(c) Replace scored gears. Inspect all gears, pinion bores and shaft for scoring, or bearings for possible damage. Service as necessary.
TOOTH BREAKAGE (RING GEAR AND PINION)	(a) Overloading.	(a) Replace gears. Examine other gears and bearings for possible damage. Replace parts as needed. Avoid Overloading.
	(b) Erratic clutch operation.	(b) Replace gears, and examine remaining parts for possible damage. Avoid erratic clutch operation.
	(c) Ice-spotted pavements.	(c) Replace gears. Examine remaining parts for possible damage. Replace parts as required.
	(d) Improper adjustment.	(d) Replace gears. Examine other parts for possible damage. Make sure ring gear and pinion backlash is correct.
REAR AXLE NOISE	(a) Insufficient lubricant.	(a) Refill rear axle with correct amount of the proper lubricant. See Specification section. Also check for leaks and correct as necessary.
	(b) Improper ring gear and pinion adjustment.	(b) Check ring gear and pinion tooth contact.
	(c) Unmatched ring gear and pinion.	(c) Remove unmatched ring gear and pinion. Replace with a new matched gear and pinion set.
	(d) Worn teeth on ring gear or pinion.	(d) Check teeth on ring gear and pinion for contact. If necessary, replace with new matched set.

Condition	Possible Cause	Correction
	(e) End play in drive pinion bearings.	(e) Adjust drive pinion bearing preload.
	(f) Side play in differential bearings.	(f) Adjust differential bearing preload.
	(g) Sure-Grip Differential moan and chatter.	(g) Drain and flush lubricant. See procedure in Sure-Grip section of Group 3.
LOSS OF LUBRICANT	(a) Lubricant level too high.	(a) Drain excess lubricant by removing filler plug and allow lubricant to level at lower edge of filler plug hole.
	(b) Worn axle shaft oil seals.	(b) Replace worn oil seals with new ones. Prepare new seals before replacement.
	(c) Cracked rear axle housing.	(c) Repair or replace housing as required.
	(d) Worn drive pinion oil seal.	(d) Replace worn drive pinion oil seal with a new one.
	(e) Scored and worn companion flange.	(e) Replace worn or scored companion flange and oil seal.
	(f) Clogged vent.	(f) Remove obstructions.
	(g) Loose carrier housing bolts or housing cover screws.	(g) Tighten bolts or cover screws to specifications and fill to correct level with proper lubricant.
OVERHEATING OF UNIT	(a) Lubricant level too low.	(a) Refill rear axle.
	(b) Incorrect grade of lubricant.	(b) Drain, flush and refill rear axle with correct amount of the proper lubricant. See Specification Section.
	(c) Bearings adjusted too tightly.	(c) Readjust bearings.
	(d) Excessive wear in gears.	(d) Check gears for excessive wear or scoring. Replace as necessary.
	(e) Insufficient ring gear to pinion clearance.	(e) Readjust ring gear and pinion backlash and check gears for possible scoring.

REAR AXLE ASSEMBLY 7¼" RING GEAR

INDEX

	Page
Axle Shafts and Bearings	3
Differential	5
Drive Gear and Pinion Backlash	9
Drive Pinion Depth of Mesh	8
Pinion Bearing Cup Installation	7
Pinion Installation and Bearing Preload	8
Rear Axle Assembly	4
Removal	4
Installation	11
Lubrication	12

GENERAL INFORMATION

The 7-1/4 Rear Axle Assembly shown in (Fig. 1), is a semi-floating type which incorporates a unitized rear axle housing assembly. The drive pinion and the differential case with drive gear are mounted directly into the center section of the rear axle housing assembly. Access to the differential, drive gears and bearings is obtained by removal of the carrier cover. Axle shaft bearings, oil seals and drive pinion oil seal can be removed and serviced without removing the complete assembly from the vehicle, but the unit should be removed for any additional operation.

A Sure Grip Differential is available in the 7-1/4" Axle Assembly, similar to those used in the 8-3/4" axle. Refer to the Sure Grip Differential Section of the Axle Group for the Servicing procedure.

All Satellite 6 cylinder models except station wagons, taxi and police application are equipped with the 7-1/4" diameter axle assembly, that has been widened to the Plymouth rear track. All service will be performed the same as standard 7-1/4" diameter axle, except where noted in the service procedure.

A hooded breather has been attached to the left leg of the axle housing approximately 15" inboard of the flange face. Gear ratio identification is stamped on the front face of the pad at the bottom of housing.

SHOULD THE REAR AXLE BECOME SUBMERGED IN WATER, THE LUBRICANT MUST BE CHANGED IMMEDIATELY TO AVOID THE POSSIBILITY OF EARLY AXLE FAILURE RESULTING FROM CONTAMINATION OF THE LUBRICANT BY WATER DRAWN INTO THE VENT HOLE.

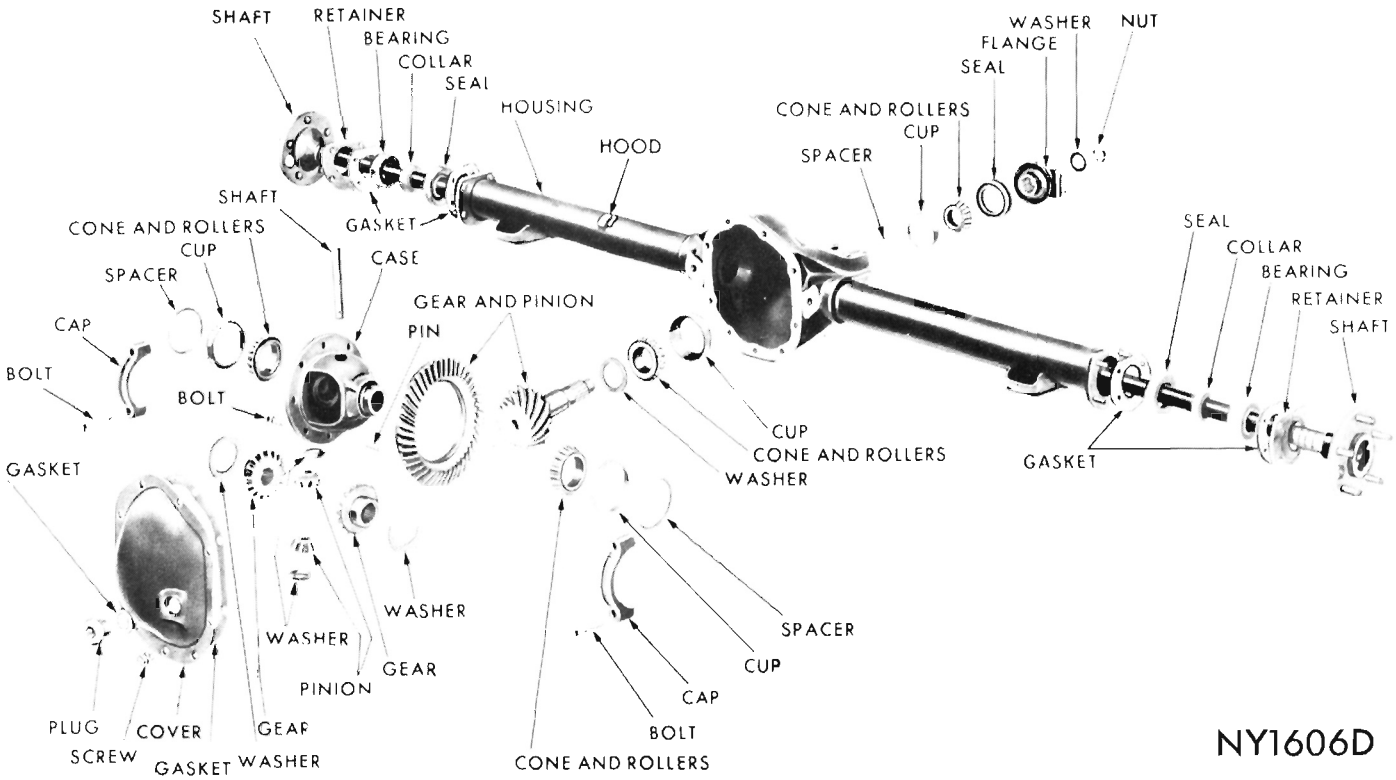

Fig. 1—7-1/4" Rear Axle Assembly

SERVICE PROCEDURES

AXLE SHAFTS AND BEARINGS

CAUTION: It is absolutely necessary that anytime an axle assembly is serviced, and the axle shaft is loosened and removed, both brake support plate gaskets and the inner axle shaft oil seal must be replaced.

Removal and Disassembly

(1) With wheels removed, remove clips holding brake drum on axle shaft studs and remove brake drum.

(2) Disconnect brake lines at wheel cylinders.

(3) Using access hole in axle shaft flange, remove retainer nuts.

(4) Attach axle shaft remover tool C-3725 to axle shaft flange and remove axle shaft. Remove brake assembly (Fig. 2).

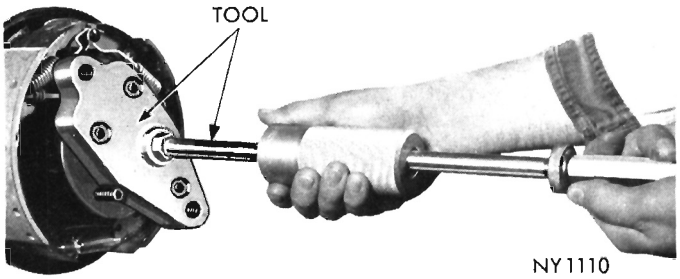

Fig. 2—Removing Axle Shaft

(5) Remove axle shaft oil seal from housing.

CAUTION: Under no circumstances should axle shaft collars of bearings be removed using a torch. The use of a torch in the removal of the axle shaft collars or bearings is an unsafe practice because heat is fed into the axle shaft bearing journal and thereby weakens this area.

(6) Position axle shaft bearing retaining collar on a heavy vise or anvil and using a chisel cut deep grooves into retaining collar at 90° intervals (Fig. 3). This will enlarge bore of collar and permit it to be driven off of axle shaft. The bearing can now be

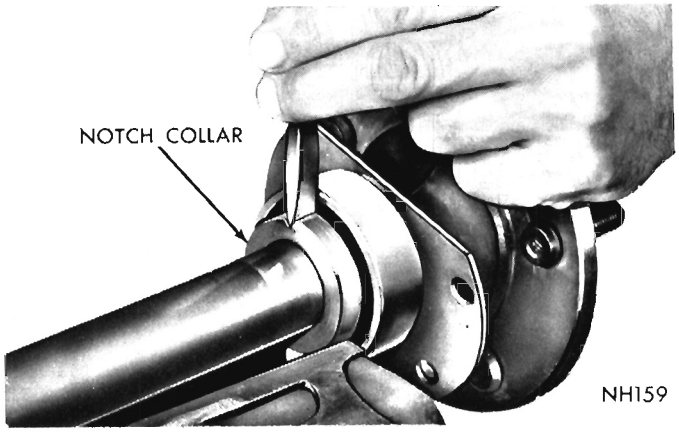

Fig. 3—Removing Axle Shaft Collar

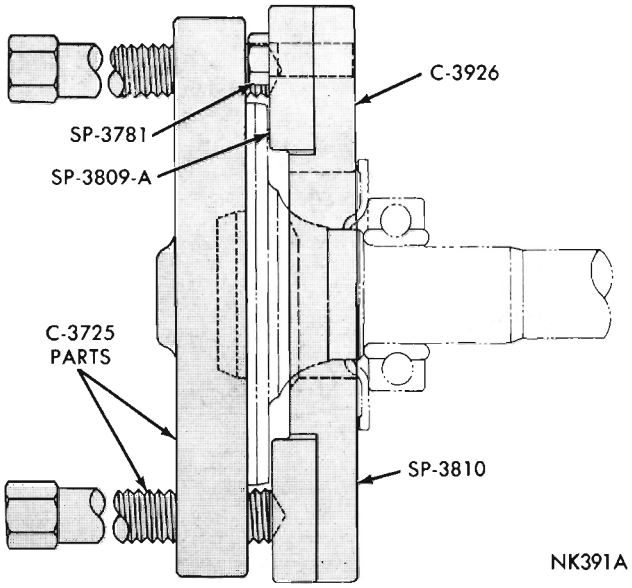

Fig. 4—Removing Axle Shaft Bearing

removed using tool C-3725 and C-3926 (Fig. 4).

On Satellite models equipped with 7-1/4 inch axle assembly to remove bearing use tool C-3971 and adapter C-4000 and protective sleeve over bearing race. Tool must be installed with two bolts (Fig. 5) on each side of the hole in axle shaft flange.

Assembly and Installation

(1) Install axle shaft retainer plate, bearing, and bearing retainer collar on axle shaft. The axle shaft bearing and bearing retainer collar must fit tightly on bearing journal of axle shaft. Using tool C-3725 and C-3926 press them into place by tightening bolts in tool alternately (Fig. 6). **Satellite models equipped with 7-1/4 inch axle, install bearings and retainer collars using Tool C-3971 and adapter C-4000.**

(2) Install new axle shaft oil seals in axle housing, using tool C-3734 (Fig. 7).

(3) Apply a light film of Multi-purpose Lubricant

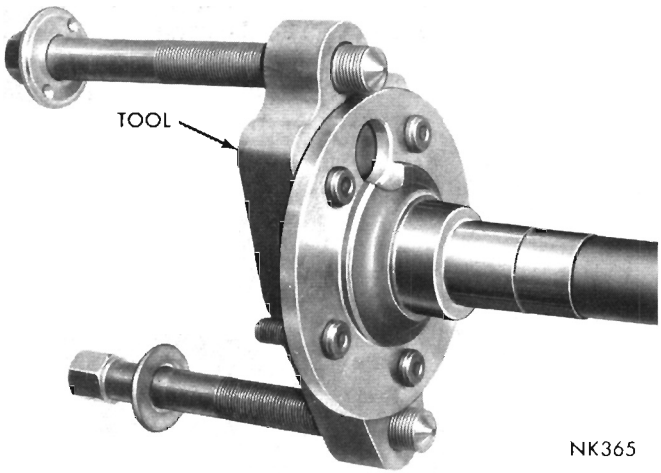

Fig. 5—Tool C-3725 Installed on Axle Shaft

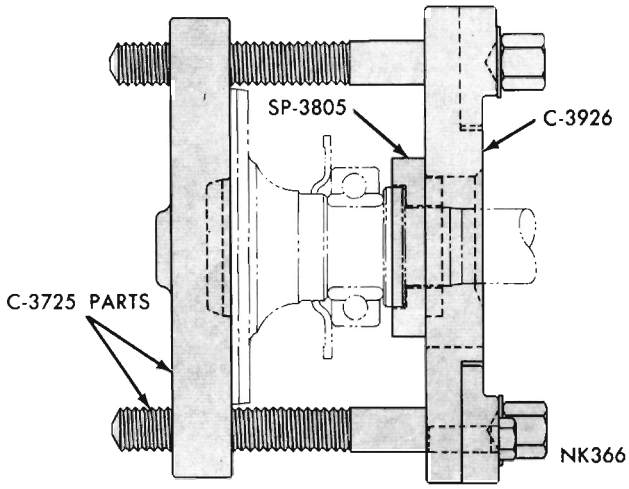

Fig. 6—Installing Rear Axle Shaft Bearing

NLGI grade 2 EP on outside diameter of bearing to prevent rust and corrosion.

(4) Install a foam gasket on studs of axle housing and position brakes support plate assembly on axle housing studs.

(5) Carefully slide axle shaft assembly through oil seal and engage splines in differential side gear.

(6) Tap end of axle shaft lightly with a non-metallic mallet to position axle shaft bearing in housing bearing bore. Position retainer plate over axle housing studs. Install retainer nuts and tighten 35 foot-pounds.

REAR AXLE ASSEMBLY

Removal

(1) Raise rear of vehicle until rear wheels clear floor. Support body at front of rear springs.

(2) Block brake pedal in the up position using a wooden block.

(3) Remove rear wheels.

(4) Disconnect hydraulic flexible line.

(5) Disconnect parking brake cable.

To maintain proper drive line balance when reassembling, make scribe marks on the propeller shaft

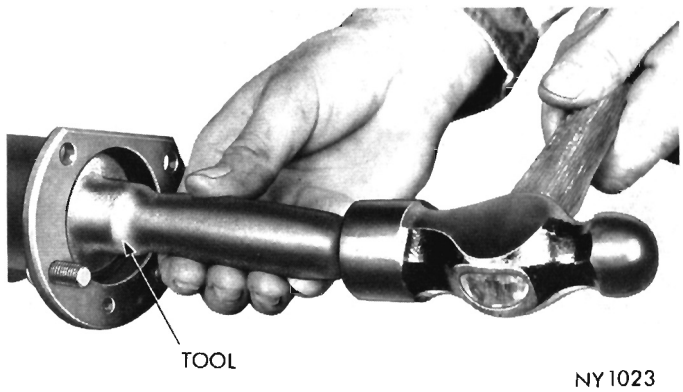

Fig. 7—Installing Axle Shaft Oil Seal

universal joint and the pinion flange before removal.

(6) Disconnect propeller shaft at differential pinion yoke and secure in an upright position to prevent damage to front universal joint.

(7) Remove shock absorber from spring plate studs and loosen rear spring "U" bolt nuts and remove "U" bolts.

(8) Remove axle assembly from vehicle.

DIFFERENTIAL

Removal and Disassembly

Side play and runout checks taken during disassembly will be very useful in reassembly.

(1) Remove drain plug in cover assembly and drain lubricant from housing.

(2) Remove cover and with a suitable cleaning solvent, clean inside the axle housing and differential case and drive gear assembly.

(3) Measure for differential side play. Position a screwdriver or pinch bar between left side of axle housing and differential case flange, then using a prying motion determine if side play is present. THERE SHOULD BE NO SIDE PLAY.

(4) In preparing to measure drive gear runout on differential case, (provided no side play was found) mount a dial indicator tool C-3339 on pilot stud C-3288, and load the indicator stem slightly when plunger is at right angles to back face of drive gear (Fig. 8).

(5) Measure drive gear runout by turning drive gear several complete revolutions and reading dial indicator. Mark drive gear and differential case at point of maximum runout. The marking of differential case will be very useful later in checking differential case runout. Total indicator reading should be no more than .005 inch. If runout exceeds .005 inch the differential case may be damaged. A test for case runout will be described later.

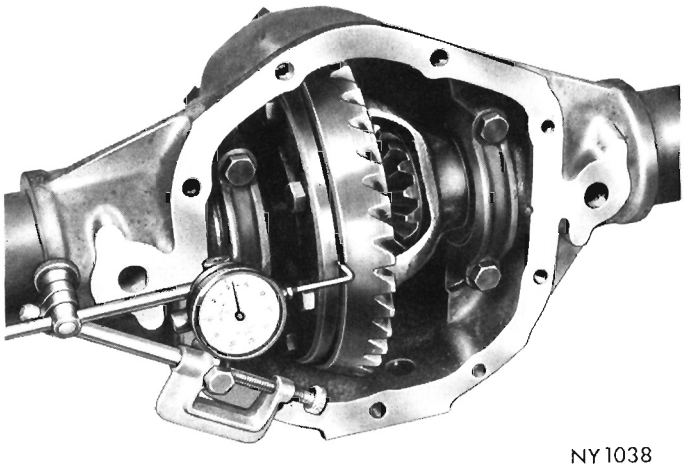

Fig. 8—Measuring Drive Gear Runout

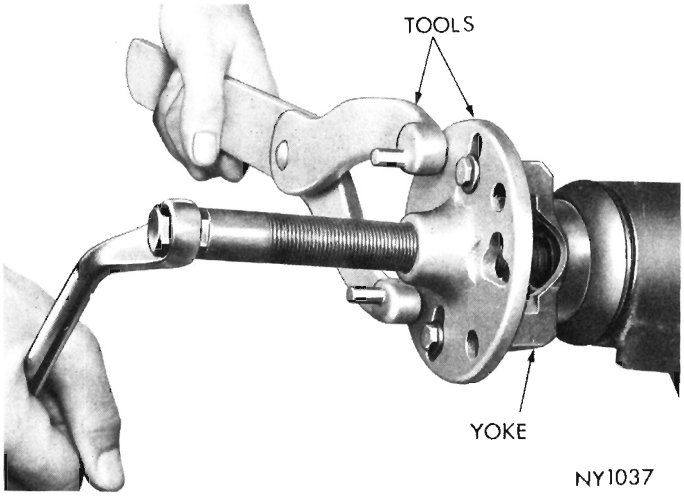

Fig. 9—Removing Companion Flange

(6) Remove drive pinion nut and washer. Using Tool C-452 and holding Tool C-3281, remove drive pinion flange (Fig. 9).

(7) Using Tool C-748 remove drive pinion oil seal (Fig. 10). Remove front pinion bearing cone and preload shim.

(8) Mark axle housing and differential bearing caps for location in reassembly (Fig. 11).

(9) Remove differential bearing caps and locate spreader Tool C-3721 with tool dowel pins seated in locating holes of axle housing. Turn tool screw finger tight at this time.

(10) Install pilot stud, Tool C-3288, on left side of axle housing. Attach dial indicator and load indicator stem slightly against opposite side of axle housing (Fig. 12).

(11) Tighten spreader tool nut sufficiently to obtain .012 to .015 inch movement of dial indicator to permit removal of differential case assembly. (Do not spread over .020 inch.)

(12) Remove dial indicator and remove differential

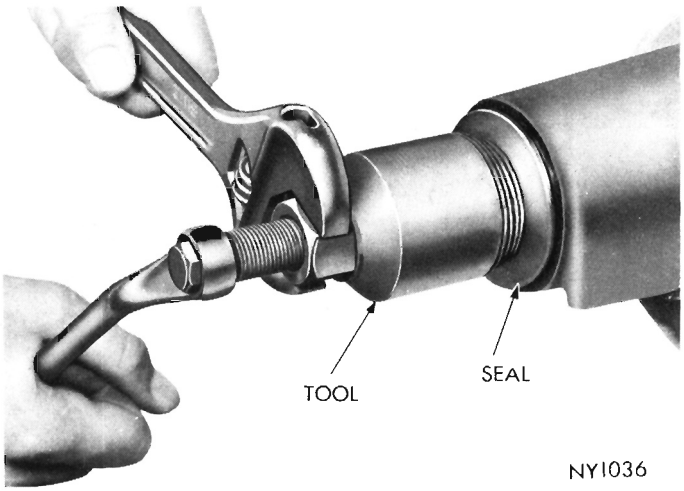

Fig. 10—Removing Pinion Oil Seal

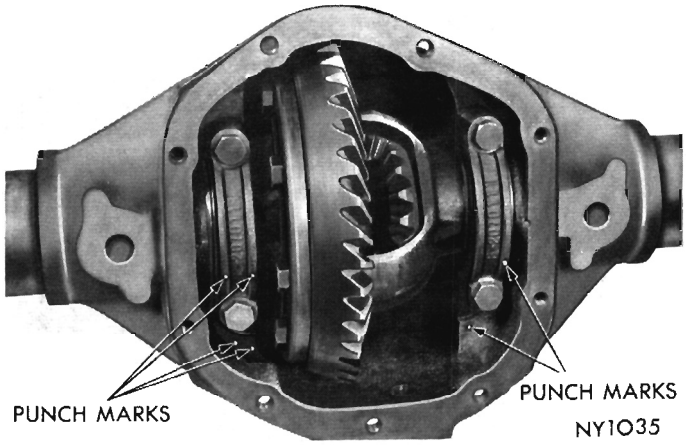

Fig. 11—Bearing Cap Identification

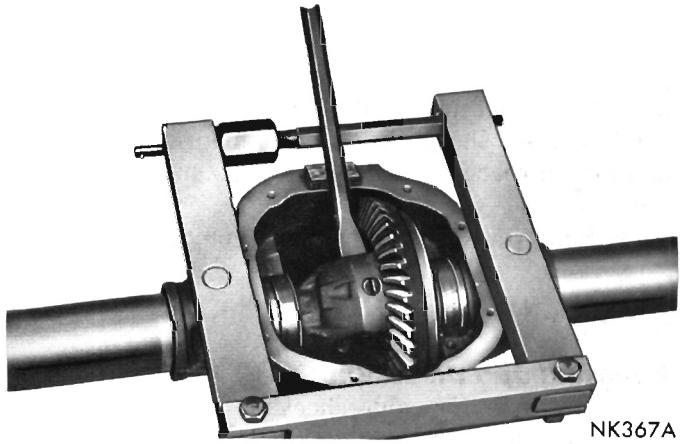

Fig. 13—Loosening Differential Assembly

and ring gear assembly from axle housing. A light prying action must be used to unseat the differential assembly from the housing (Fig. 13). Differential bearing cups and preload adjusting spacers must be kept with respective bearing cones. Do not remove spreader tool.

(13) Remove drive pinion and rear bearing assembly from axle housing.

(14) Using a flat end brass drift, remove front and rear bearing cups from housing.

(15) Mount differential case and ring gear assembly in a vise equipped with soft jaws (brass).

(16) Remove drive gear bolts. BOLTS ARE LEFT HAND THREAD. With a non-metallic hammer tap drive gear loose from differential case pilot and remove.

(17) If a drive gear runout exceeded .005 inch in step 4, differential case flange runout should be remeasured. Install differential case with appropriate bearing cups and shims in axle housing. Loosen nut of spreader tool and remove, mount dial indicator in contact with drive gear flange face to take runout readings as in steps 3, 4 and 5. Total allowable runout should not exceed .003 inch. It is often possible to reduce high runout by positioning drive gear 180° from point of maximum runout when re-assembling ring gear on differential case.

(18) With small drift remove differential pinion shaft lock pin from drive gear side of case.

(19) With a brass drift remove differential pinion shaft.

(20) Rotate differential side gears until differential pinions appear at differential case windows and remove.

(21) Remove differential side gears and thrust washers.

(22) Remove differential bearings using Tool C-293 and #39 plates (Fig. 14).

(23) Remove rear pinion bearing cone from pinion stem using Tool C-293 and #40 plates (Fig. 15).

Cleaning and Inspection

(1) Clean all parts except axle shaft bearings with a suitable cleaning solvent. With oil dampened cloth wipe axle shaft bearing outer race. Clean off all rust and corrosion. To clean axle housing tubes insert a

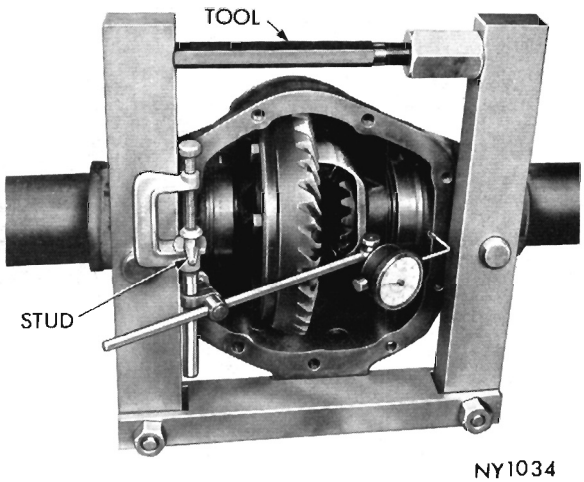

Fig. 12—Spreading Rear Axle Housing

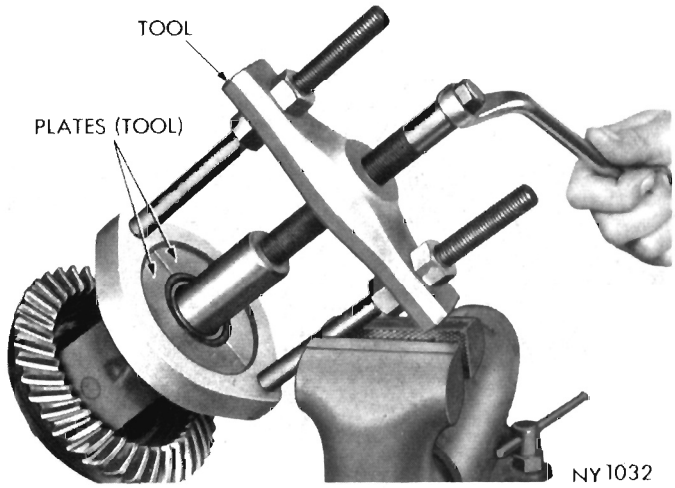

Fig. 14—Removing Differential Bearing Cone

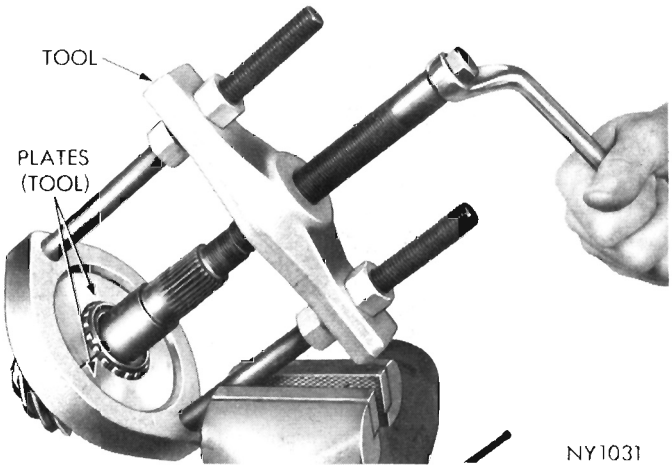

Fig. 15—Removing Rear Pinion Bearing Cone

stiff wire into tube, attach a clean cloth to wire at center section and withdraw from center outward.

(2) All machined contact surfaces in the axle housing and differential bearing caps should be smooth and free of any raised edges. Front and rear pinion bearing cup bore machined surfaces should be smooth. Raised metal on shoulders of bores incurred in removal of cups should be flattened by use of a flat nosed punch.

(3) The axle drive shaft bearing and oil seal bores at both ends of housing should be smooth and free of rust and corrosion. This also applies to the brake support plate and housing flange face area.

(4) The axle shaft splines should be smooth and free of excessive wear. The axle shaft oil seal journal should be smooth and free of nicks, scratches or blemishes. To remove any imperfections polish with #600 crocus cloth (without reducing diameter of axle shaft oil seal surface).

(5) If axle shaft bearings, collars and retainers are removed from shafts they are unfit for further use and MUST BE REPLACED. Refer to axle shaft assembly procedure.

(6) Differential bearings and front and rear pinion bearing cone and cup assemblies should have a smooth appearance with no broken or dented surfaces on rollers or roller contact surfaces. The bearing roller retainer cages must not be distorted or cracked.

(7) Differential side gears and pinions should have smooth teeth with a uniform contact pattern without excessive wear or broken surfaces. The differential side gear hub surfaces and thrust washer contact surfaces should be smooth and free from any scoring or metal pickup.

(8) The machined thrust washer surface areas inside the differential case should be polished and with no surface inperfections. The pinion shaft bore in differential case should be round and smooth. The differential pinion shaft should be round and without excessive wear in areas of contact with either differential case or differential pinions.

(9) The ring gear and drive pinion teeth should have a uniform contact pattern with smooth and unbroken surfaces without excessive wear. Machined surfaces of the pinion stem (at points of contact with either rear pinion bearing contact journal or rear pinion bearing mounting shim surface should be smooth.

Assembling the Differential

Lubricate all parts when assembling and adjusting.

(1) Install thrust washers on differential side gears and position gears in case.

(2) Place thrust washers on both differential pinion gears and mesh the pinion gears with the side gears, having pinion gears exactly 180° apart.

(3) Rotate side gears to align pinion gears and washers with differential pinion shaft holes in case.

(4) Install differential pinion shaft with care not to damage thrust washers. Hole in pinion shaft must align with lock pin hole in differential case.

(5) Install lock pin in differential case from drive gear tooth side.

(6) Position drive gear on differential case to separate the points of maximum runout 180° apart and start all bolts through case into drive gear. Finger tighten. (LEFT HAND THREAD.)

(7) Tap drive gear against differential case flange with non-metallic mallet. Tighten bolts to 55 foot-pounds.

(8) Install differential bearing cones with Tool C-3716 (Fig. 16).

PINION BEARING CUP INSTALLATION

Rear axle gauge Tool C-3715 is used to install drive pinion bearing cups as well as to determine pinion depth of mesh (Fig. 17).

(1) Start both drive pinion bearing cups into axle housing.

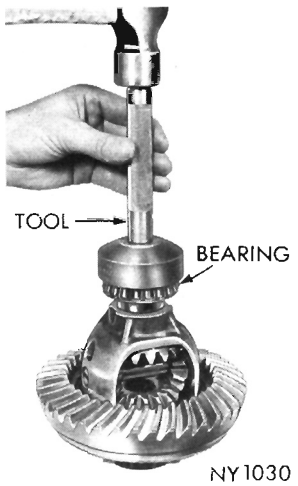

Fig. 16—Installing Differential Bearing Cone

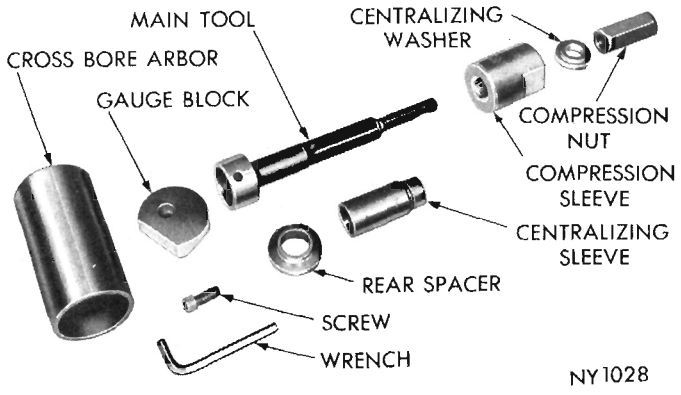

Fig. 17—Pinion Setting Gauge Tool C-3715

(2) Place rear spacer SP-3244 on main tool. Seat rear pinion bearing cone on spacer and hold tool in housing.

(3) Place centralizing sleeve SP-3245 on tool and place front pinion bearing cone on centralizing sleeve, followed by tool sleeve, centralizing washer and nut.

(4) While holding compression sleeve from turning with Tool C-3281, tighten nut, thereby drawing pinion bearing cups into axle housing bearing cup bores. Permit tool to turn several revolutions during tightening operation to permit bearing rollers to align. Leave tool in carrier for determining depth of mesh.

DRIVE PINION DEPTH OF MESH (Using Tool C-3715)

(1) With main tool left in axle housing after installing drive pinion bearing cups, loosen tool nut and re-tighten to produce 15-25 inch-pounds of turning torque. Attach gauge block to main tool using allen screw.

(2) Position cross bore arbor in axle housing differential bearing seats and install bearing caps. Tighten cap bolts lightly.

(3) Select rear pinion bearing mounting shim which will fit between cross bore arbor and gauge block. This fit must be snug but not too tight (similar to the pull of a feeler gauge) (Fig. 18).

If the mark on the pinion head is plus (+2), select a shim that many thousandths thinner for installation. If mark on pinion has a minus (—2), select a shim that many thousandths thicker for installation. Treat other pinion markings in a similar manner. Spacers are available in one thousandths of an inch increments from .084 to .100 inch.

(4) Remove tool arbor and tool from axle housing.

PINION INSTALLATION AND BEARING PRELOAD

Pinion bearing mounting shims are chamfered on one side and must be installed on the pinion stem with chamfered side toward pinion head.

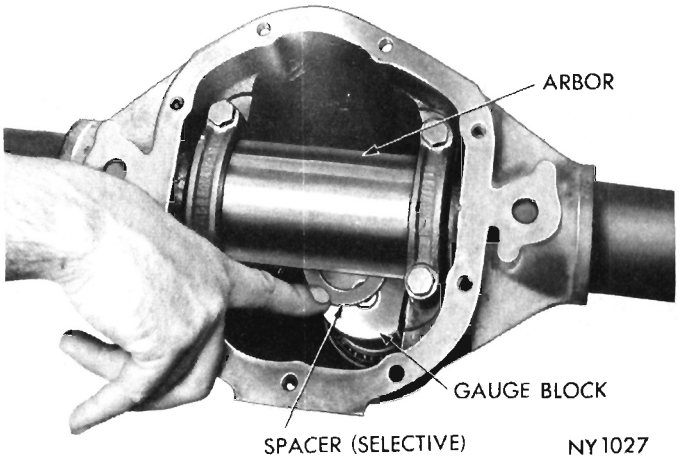

Fig. 18—Measuring Housing For Pinion Shim Thickness

(1) Place selected shim and rear pinion bearing cone on pinion stem. Using installing sleeve Tool C-3717, press bearing on pinion stem (Fig. 19).

(2) Hold drive pinion and bearing assembly in axle housing and install original preload shim (chamfered side toward shoulder), followed by front pinion bearing cone, pinion flange, belleville washer (convex side of washer up) and pinion nut.

(3) Position housing with nose up. Tighten pinion nut to 240 foot-pounds (minimum) with torque wrench C-485, using holding Tool C-3281 on pinion flange. Position holding Tool C-3281 in several positions to make a complete revolution while tightening. Remove holding tool and rotate pinion assembly several revolutions in both directions to align rollers. Recheck torque to 240 foot-pounds. Torque may have diminished as bearing rollers were aligned by rotating.

(4) Using inch pound torque wrench C-685, measure pinion bearing preload by rotating pinion with handle of wrench floating. Take readings while han-

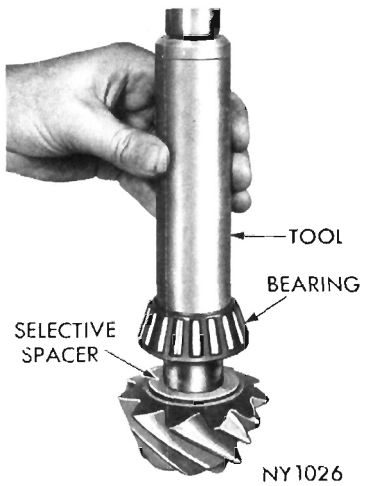

Fig. 19—Installing Pinion Shim and Rear Bearing Cone

dle is moving through several revolutions. Accurate readings can be made only with nose of axle in upright position. Correct preload is 15-25 inch-pounds. Bearing preload should be uniform during full revolution. A reading which varies during rotation indicates a binding condition which should be corrected. **Use thinner shim to increase preload and thicker shim to decrease preload.** Always perform steps 3 and 4 in exactly the same manner each time to obtain accurate readings. Preload shims are available in one thousandths of an inch increments from .074 to .106 inch.

(5) When front pinion bearing preload is correct, remove pinion nut, washer and flange.

(6) Apply a light coat of sealer in drive pinion oil seal bore of axle housing.

(7) Install drive pinion oil seal (lip toward pinion head) with Tool C-4002 (double lip synthetic rubber oil seal) or Tool C-3719 (single lip leather oil seal). The proper tool must be used in order to position the seal the proper depth into the housing (Fig. 20).

(8) Install drive pinion flange using Tool C-3718 and holding Tool C-3281 (Fig. 21).

(9) Remove Tool C-3718 and install belleville washer, (convex side of washer up) and pinion nut. Tighten nut to 240 foot-pounds.

DRIVE GEAR AND PINION BACKLASH

(1) With drive pinion and bearings installed and bearing preload set, install differential case and ring gear assembly, and cups. Insert a .254 inch preload adjusting spacer on ring gear side (Fig. 22) of axle housing. Do not install bearing caps.

(2) Install a preload spacer on right side of housing

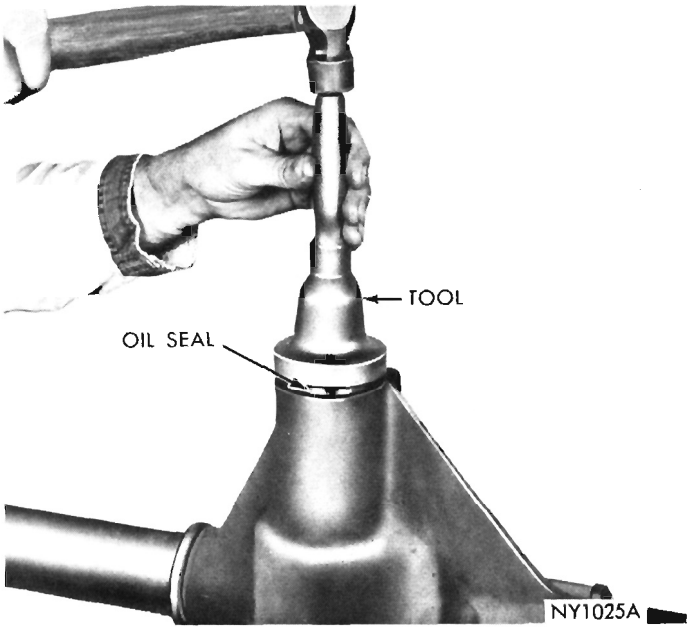

Fig. 20—Installing Pinion Oil Seal

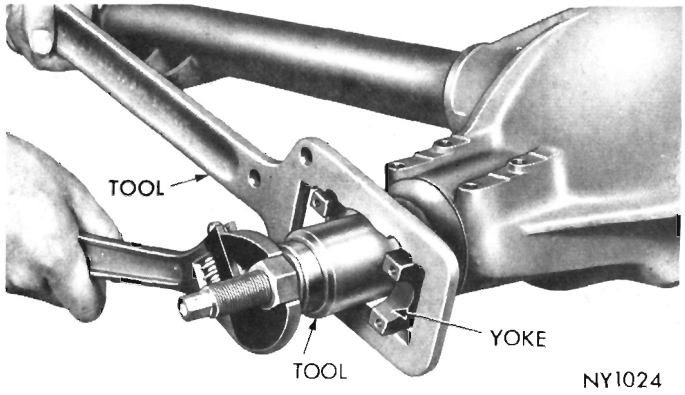

Fig. 21—Installing Companion Flange

that will fit snugly but still leave a slight amount of end play.

(3) To measure, move differential to the left side or ring gear side of rear axle housing. Using two sets of feeler gauges, insert feeler gauges between the spacer and the right side of the axle housing above the center line of the case (Fig. 23). Insert the same thickness of feeler gauges between the spacer and the axle housing below center line of case. Increase thickness of gauges until heavy drag is felt.

(4) Rotate differential and ring gear assembly several times in both directions to seat bearings and cups and re-check feeler gauge drag.

(5) Install a spacer totaling the combined thickness of spacer and feeler gauge. This will provide zero end play.

(6) Measure drive gear backlash at 4 positions at approximately 90 degrees intervals (Fig. 24). Refer to "Differential Preload Spacer Chart" for selection of proper spacers to provide .004" to .007" backlash.

(7) Remove differential case and ring gear assembly from axle housing.

(8) With proper spacers selected for left and right sides of assembly as specified by "Differential Preload Spacer Chart", attach spreader Tool C-3721 with

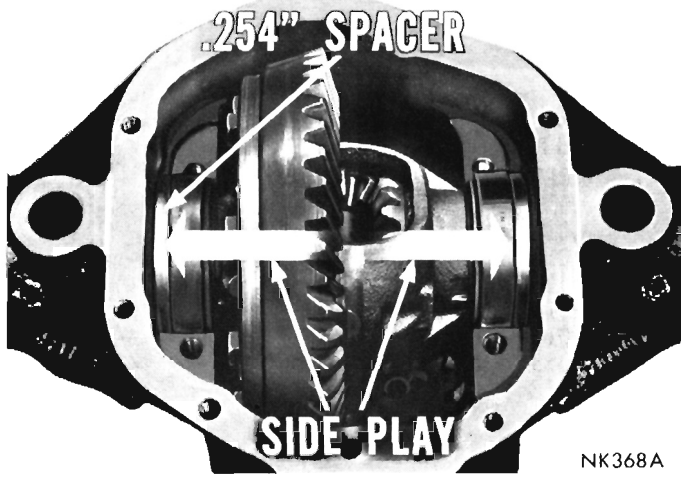

Fig. 22—Temporarily Install Thinnest Spacer

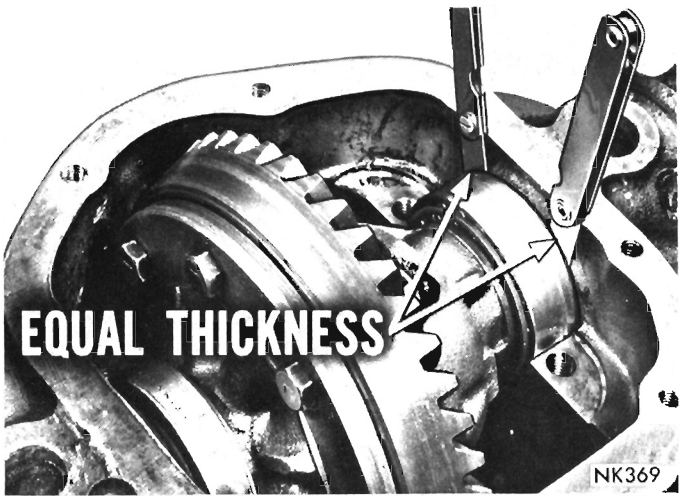

Fig. 23—Feeler Gauges Measuring Thickness

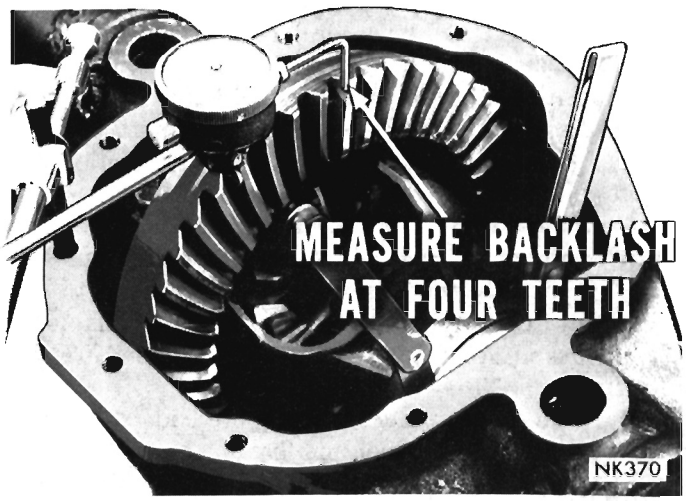

Fig. 24—Determining Minimum Backlash

tool dowel pins seated in locating holes of axle housing. Tighten tool screw only finger tight at this time.

(9) Install pilot stud Tool C-3288 on left side of axle housing. Attach dial indicator and load indicator stem slightly against opposite side of axle housing (Fig. 12).

(10) Tighten spreader tool nut sufficiently to obtain .012″ to .015″ movement of dial indicator to permit installation of differential case assembly. Do not spread over .020 inch.

(11) Remove dial indicator.

(12) Holding differential assembly with bearing cups on respective bearing and selected preload spacers, carefully install differential and ring gear assembly into axle housing.

(13) Loosen spreader tool nut and remove spreader.

(14) Install differential bearing caps on respective sides and alternate tightening bolts to 40 foot-pounds.

(15) Install dial indicator to axle housing with indicator parallel to drive gear. With pointer of indicator contacting the drive side of ring gear tooth, measure drive gear backlash. At least four readings should be taken on teeth approximately 90° apart to find the point of least backlash, and mark the tooth.

(16) At point of minimum backlash, dial indicator should read .004 to .007 inch. If reading is not within this tolerance, it will be necessary to refer to chart and Install Differential Spacers an re-check backlash to bring within proper specifications.

(17) Apply a thin film of red or white lead on both the drive and coast side of the drive gear teeth. Rotate drive gear one complete revolution in both directions while prying with a round bar or screwdriver between the casting and differential case flange. This action creates a load and produces a distinct tooth contact pattern on the drive gear teeth.

(18) Observe the contact pattern on the drive gear teeth and compare with those in (Fig. 25) to determine if pattern is properly located. If pinion depth of mesh and gear backlash are correct, the heaviest most distinct part of contact pattern should be centered on both drive and coast sides of the drive gear teeth.

If your tooth contact resembles that in (Fig. 26), the

DIFFERENTIAL PRELOAD SPACER SELECTION CHART

Backlash at Zero End Play	Change Left Spacer Thickness by:	Change Right Spacer Thickness by:	Backlash at Zero End Play	Change Left Spacer Thickness by:	Change Right Spacer Thickness by:
.020	+.026	−.016	.010	+.012	−.002
.019	+.024	−.014	.009	+.010	−.000
.018	+.022	−.012	.008	+.008	+.002
.017	+.022	−.012	.007	+.008	+.002
.016	+.020	−.010	.006	+.006	+.004
.015	+.020	−.010	.005	+.004	+.006
.014	+.018	−.008	.004	+.002	+.008
.013	+.016	−.006	.003	+.002	+.008
.012	+.014	−.004	.002	+.000	+.010
.011	+.014	−.004	.001	+.000	+.012

Should the zero end play backlash measure more than .020 (Maximum chart figure) increase the thickness of the left spacer from the specified .254″ to a thickness great enough to reduce the zero end play backlash within the chart limits; then follow the recommended procedure.

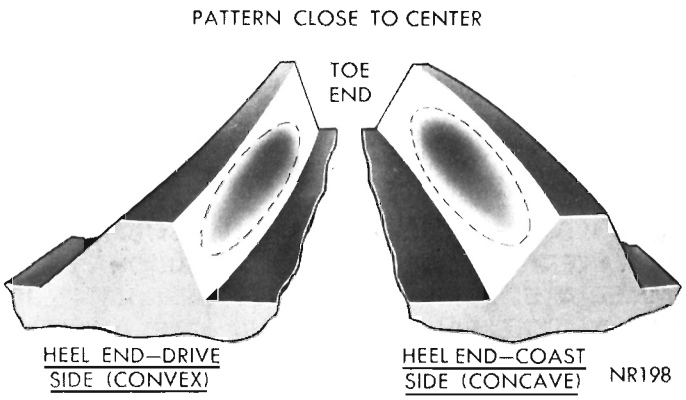

Fig. 25—Desired Tooth Contact Pattern Under Light Load

drive pinion is too far away from centerline of the ring gear, the contact pattern will appear high on the heel on drive side and high on toe on coast side. To correct this type tooth contact pattern, increase the thickness of the rear pinion bearing mounting spacer (Fig. 27), which will cause the high heel contact on drive side to lower and move toward the toe; the high toe contact on coast side will lower and move toward the heel.

If the tooth contact pattern resembles that in (Fig. 28), the drive pinion is too close to the ring gear, the pattern will appear low on the toe on drive side and low heel contact on the coast side. To correct this type tooth contact pattern, decrease the thickness of the rear pinion bearing mounting spacer (Fig. 29), which will cause the low toe contact on drive side to raise and move toward the heel; low heel contact on coast side will raise and move toward the toe.

(19) When correct tooth contact pattern is obtained, and cover and gasket surface is thoroughly clean, install cover with new gasket on housing and insert cover bolts and tighten to 20 foot-pounds.

Installation

Refer to Paragraph "Axle Shaft Assembly" when installing the rear axle shafts.

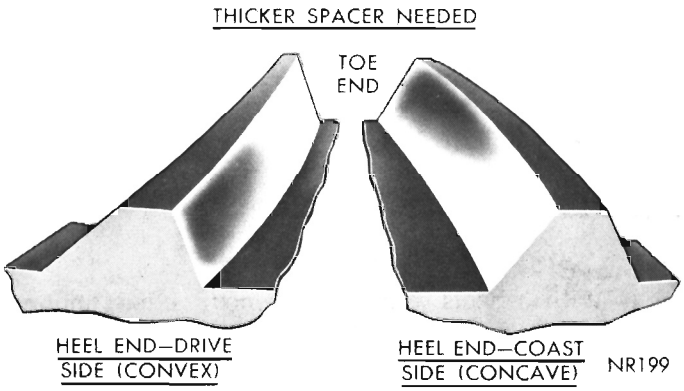

Fig. 26—Incorrect Tooth Contact Pattern (Increase Spacer Thickness)

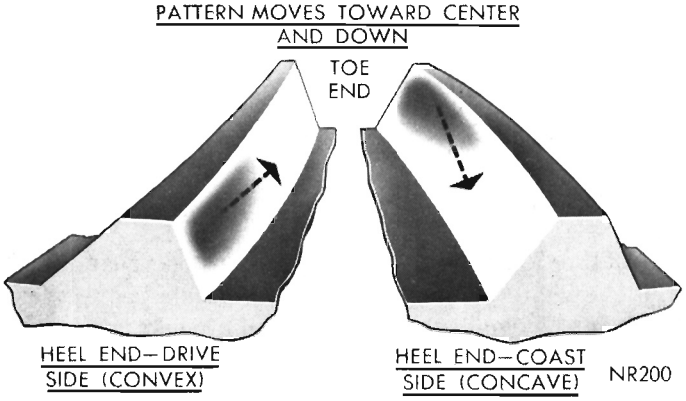

Fig. 27—Effect on Tooth Pattern as Spacer Thickness is Increased

(1) With body supported at front of rear spring, position rear axle assembly spring seats over the spring center bolts.

(2) Install spring "U" bolts and tighten nuts to 45 foot-pounds and install shock absorbers on spring plate studs.

(3) Connect hand brake cable.

(4) Install propeller shaft (match scribe marks on propeller shaft universal joint and pinion flange). Tighten clamp screws to 15 foot-pounds.

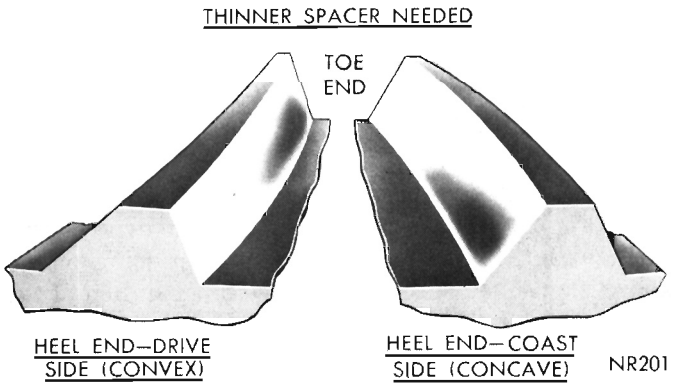

Fig. 28—Incorrect Tooth Contact Pattern (Decrease Spacer Thickness)

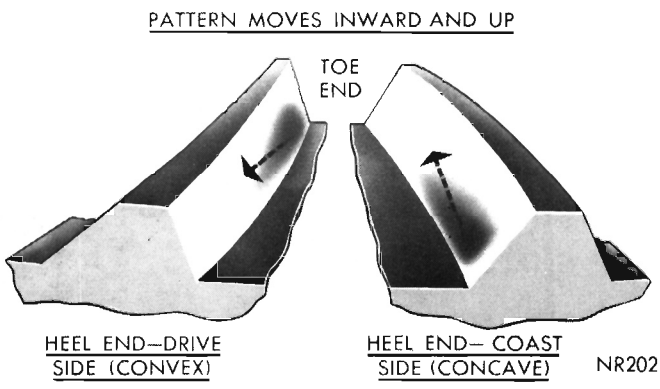

Fig. 29—Effect on Tooth Pattern as Spacer Thickness is Decreased

(5) Connect brake lines to rear wheel cylinders and connect hydraulic flexible line and bleed wheel cylinder.

(6) Install brake drums and rear wheels and tighten to 55 foot-pounds and adjust brakes.

LUBRICATION

Refill axle assembly with multi-purpose gear lubricant as defined by MIL-L-2105B on all rear axles. Chrysler Hypoid Lubricant is an oil of this type, available under **Part Number 2585317 and is suitable for standard conventional axles only.** Multi-Purpose Gear Lubricant available under Part Number 2933565 is required for Sure-Grip differential and also suitable for conventional differentials.

Anticipated Temperature	Viscosity Grade
Above — 10°F.	SAE 90
As low as — 30°F.	SAE 80
Below — 30°F.	SAE 75

"SHOULD THE REAR AXLE BECOME SUBMERGED IN WATER, THE LUBRICANT MUST BE CHANGED IMMEDIATELY TO AVOID THE POSSIBILITY OF EARLY AXLE FAILURE RESULTING FROM CONTAMINATION OF THE LUBRICANT BY WATER DRAWN INTO THE VENT HOLE."

REAR AXLE ASSEMBLY 8¾" RING GEAR

INDEX

	Page
Axle Shafts and Bearings	12
Axle Shaft End Play	16
Differential and Carrier (Removal)	16
Differential and Carrier (Installation)	28
Differential Case	18
Drive Gear and Pinion Backlash	26
Gear Tooth Contact Pattern	27
Lubrication	28
Pinion Bearing Cup Installation	21
Pinion Bearing Preload and Pinion Setting Using Tool C-758-D-4	21
Small Stem Step Pinion	21
Large Stem Step Pinion	23
Large Stem Pinion With Collapsible Spacer	25
Pinion Bearing Preload and Pinion Setting Without Using Tool C-758-D4	25
Rear Axle Housing	16
Removal and Replacement of Drive Pinion Flange and Oil Seal in Vehicle	28

GENERAL INFORMATION

The 8-3/4" Rear Axle Assembly shown in (Fig. 1), is a semi-floating type and may be divided into four subassemblies; flanged axle drive shafts with related parts (Fig. 2.) differential with drive gear, drive pinion with carrier, and the axle housing. Servicing of the above mentioned subassemblies, with exception of the axle housing may be performed without removing the complete rear axle assembly from the vehicle.

Gear ratio identification numbers will be stamped on a metal tag and attached by means of the rear axle housing-to-carrier bolt.

Some 8-3/4" large stem differential and carrier assemblies have incorporated a new collapsible spacer which bears against the inner races of the front and rear bearings. This collapsible spacer is used to establish preload on the pinion bearings.

Adjustment of pinion depth of mesh is obtained by placing shims between the carrier casting and rear pinion bearing cup.

The differential bearings are larger on both the conventional and Sure-Grip Differentials and are not interchangeable with previous years bearings.

A new Sure-Grip Differential is available as optional equipment in both the 7-1/4" and 8-3/4" rear axle assembly. The new Sure-Grip Differential is of a two piece construction similar to the old type and is completely interchangeable with the previous type and will be serviced as a complete assembly only. Refer to the "Sure Grip Differential" Section of the Axe Group for the servicing procedure.

SHOULD THE REAR AXLE BECOME SUBMERGED IN WATER, THE LUBRICANT MUST BE CHANGED IMMEDIATELY TO AVOID THE POSSIBILITY OF EARLY AXLE FAILURE RESULTING FROM CONTAMINATION OF THE LUBRICANT BY WATER DRAWN INTO THE VENT.

SERVICE PROCEDURES

AXLE SHAFTS AND BEARINGS

CAUTION: it is absolutely necessary that anytime an axle assembly is serviced, and the axle shafts are loosened and removed, the axle shaft gaskets and inner axle shaft oil seals must be replaced.

Removal

(1) With wheels removed, remove clips holding brake drum on axle shaft studs and remove brake drum.

(2) Using access hole in axle shaft flange, remove retainer nuts, the right shaft with threaded adjuster

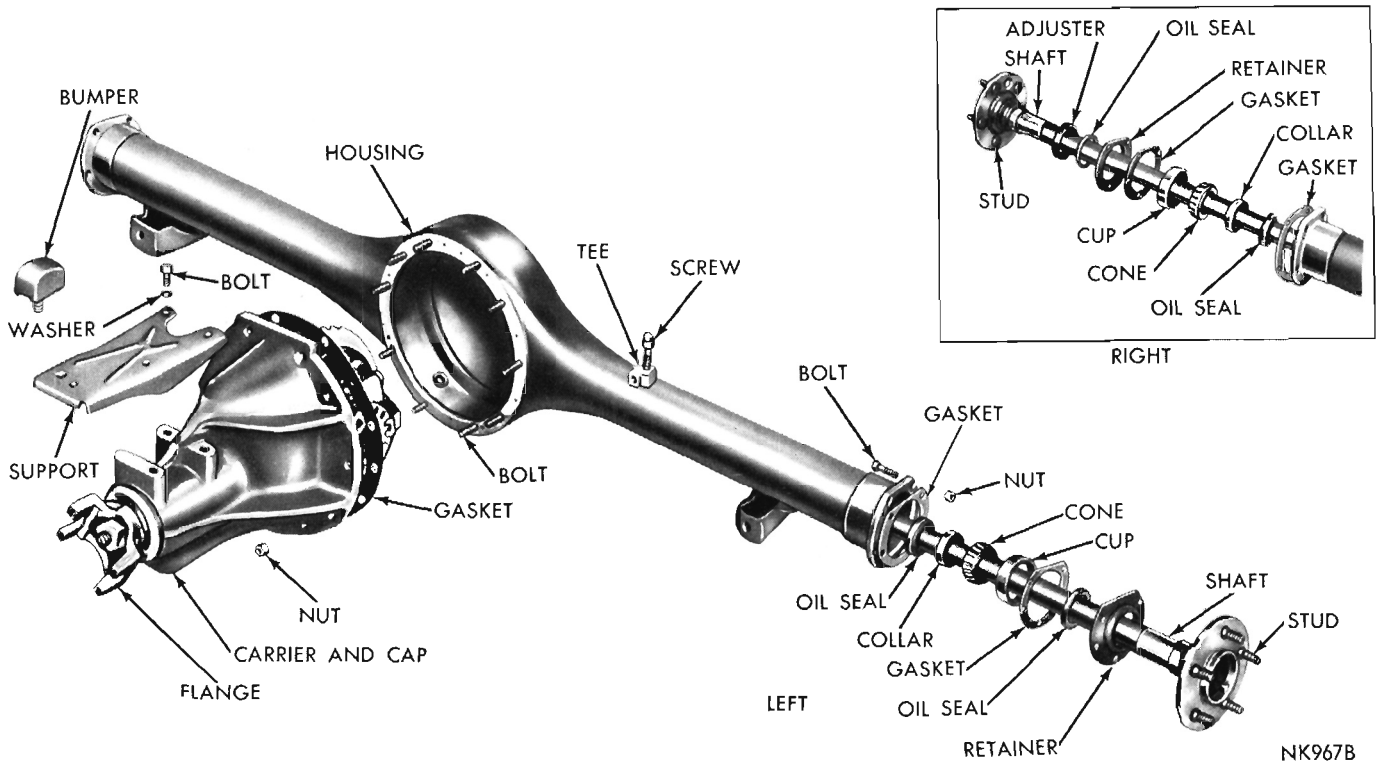

Fig. 1—8-3/4" Rear Axle Assembly

in retainer plate will have a lock under one of the studs that should be removed at this time.

(3) Remove parking brake strut.

(4) Attach axle shaft remover Tool C-3971 (Fig. 3) to axle shaft flange and remove axle shaft. Remove brake assembly and gaskets.

(5) Remove axle shaft oil seal from axle housing using Tool C-637 (Fig. 4).

(6) Wipe axle housing seal bore clean and install a new axle shaft oil seal using Tool C-839 (Fig. 5).

Disassembly

CAUTION: To prevent the possiblity of damaging axle shaft seal surface, slide protective sleeve SP-5041 over the seal surface next to bearing collar.

CAUTION: Under no circumstances should axle shaft collars or bearings be removed using a torch. The use of a torch in the removal of the axle shaft collars or bearings is an unsafe practice, because heat is fed into the axle shaft bearing journal and, thereby weakens this area.

(1) Position axle shaft bearing retaining collar on a heavy vise or anvil and using a chisel, cut deep grooves into retaining collar at 90° intervals (Fig. 6). This will enlarge bore of collar and permit it to be driven off of axle shaft.

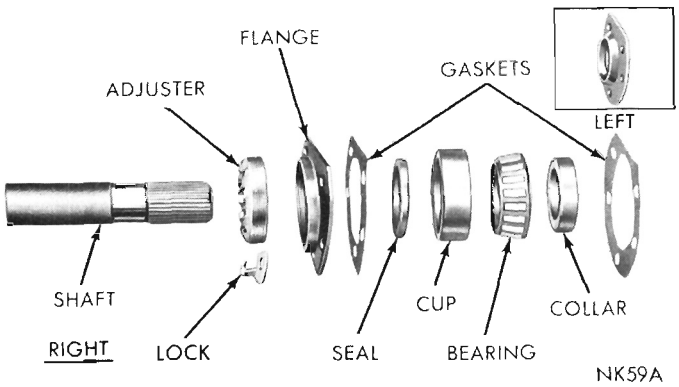

Fig. 2—Axle Shaft Disassembled

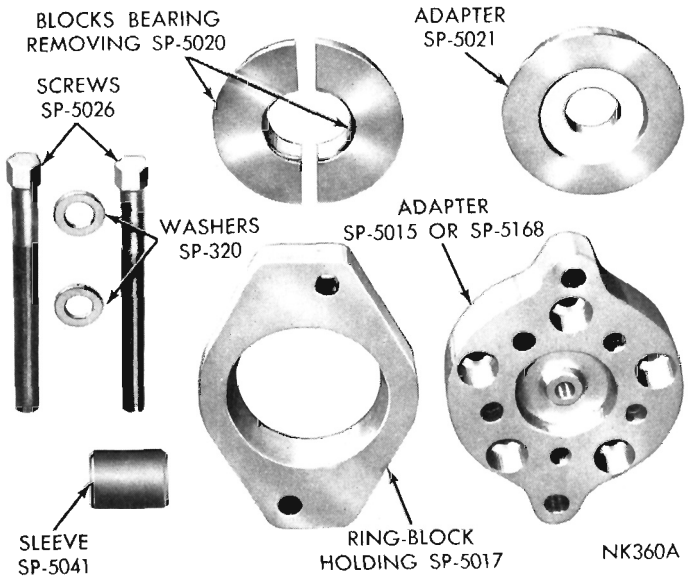

Fig. 3—Tool Set C-3971

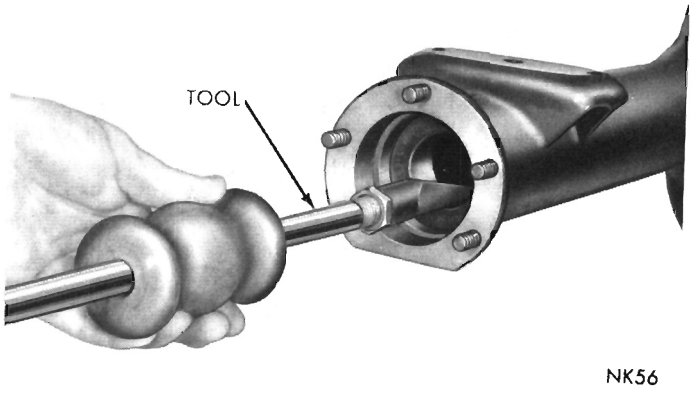

Fig. 4—Removing Axle Shaft Seal

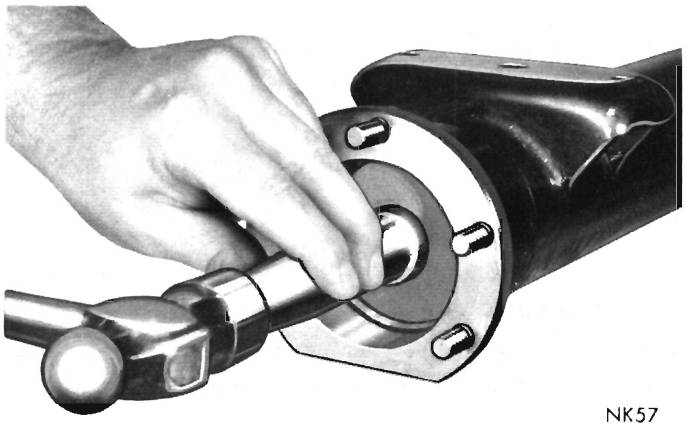

Fig. 5—Installing Axle Shaft Seal

(2) Remove bearing roller retainer flange by cutting off lower edge with a chisel (Fig. 7).

(3) Grind a section off flange of inner bearing cone (Fig. 8) and remove bearing rollers (Fig. 9).

(4) Pull bearing roller retainer down as far as possible and cut with a pair of side cutters and remove (Fig. 10).

(5) Remove roller bearing cup and protective sleeve SP-5041 from axle shaft.

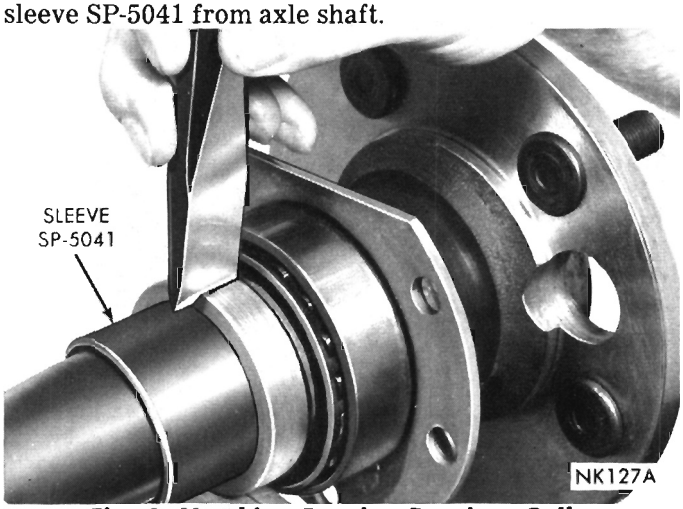

Fig. 6—Notching Bearing Retainer Collar

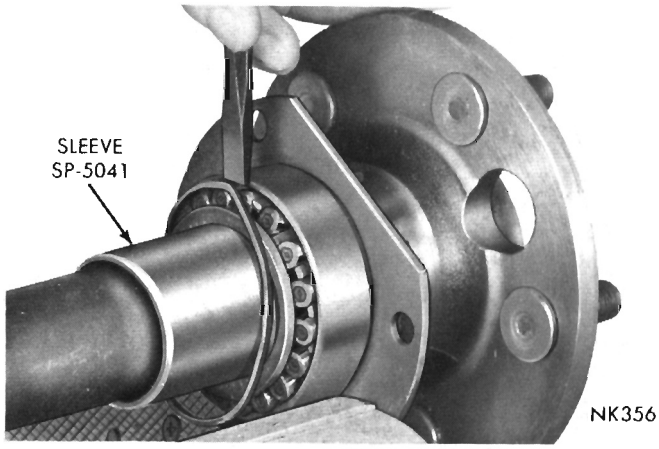

Fig. 7—Removing Roller Retainer

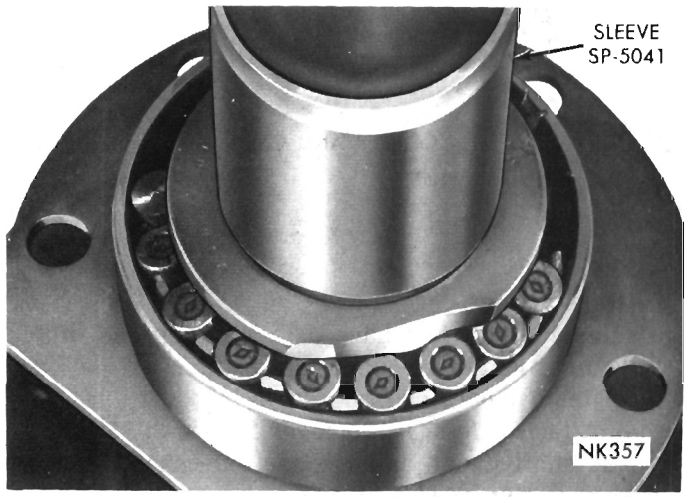

Fig. 8—Flange Ground Off Inner Cone

CAUTION: Sleeve SP-5041 should not be used as a protector for the seal journal when pressing off the bearing cone, as it was not designed for this purpose.

(6) To avoid scuffing seal journal when bearing cone is being removed, it should be protected by

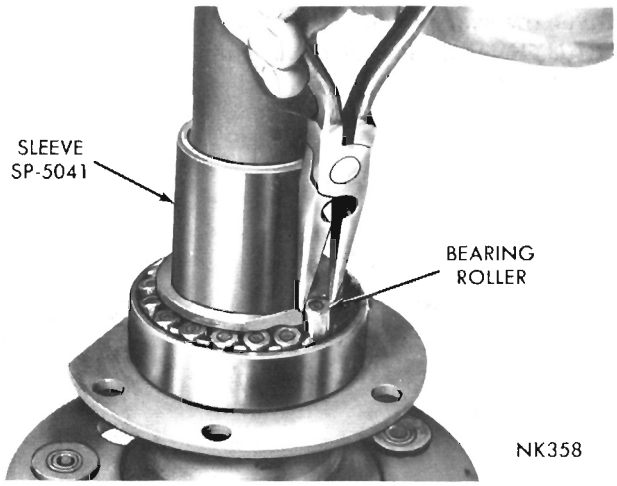

Fig. 9—Removing Bearing Rollers

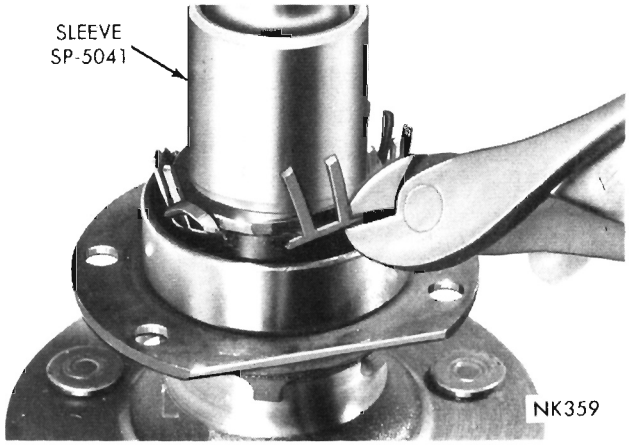

Fig. 10—Cutting Out Roller Bearing Retainer

single wrap of .002 thickness shimstock held in place by a rubber band (Fig. 11).

(7) Remove the bearing cone using Tool C-3971 (Fig. 3). Tighten bolts of tool alternately until cone is removed (Fig. 12).

(8) Remove seal in bearing retainer plate and replace with new seal.

Assembly

(1) Install retainer plate and seal assembly on axle shaft.

(2) Lubricate wheel bearings with Multi-Purpose Grease, NLGI grade 2 E.P.

(3) Install a new axle shaft bearing cup, cone and collar on shaft using Tool C-3971 (Fig. 13) and tighten bolts of tool alternately until bearing and collar are seated properly.

(4) Inspect axle shaft seal journal for scratches and polish with #600 crocus cloth if necessary.

Installation

(1) Clean axle housing flange face and brake support plate thoroughly. Install a new rubber asbestos

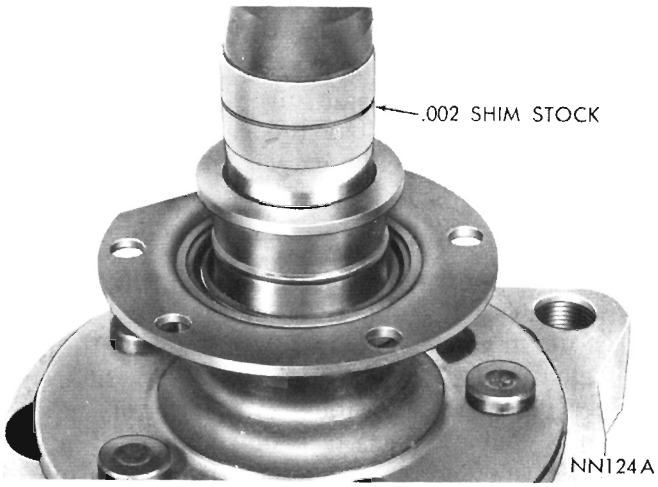

Fig. 11—Seal Journal Protection

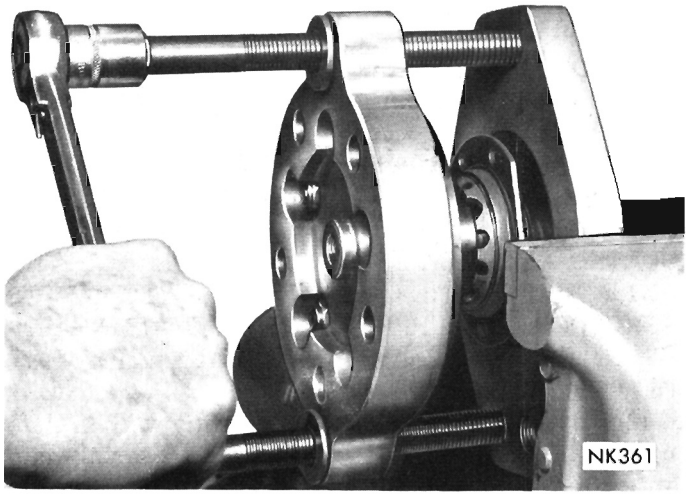

Fig. 12—Removing Bearing Cone with Tool C-3971

gasket on axle housing studs, followed by brake support plate assembly on left side of axle housing.

(2) Apply a thin coating of Multi-Purpose Grease, NLGI grade 2 E.P. to the outside diameter of the bearing cup prior to installing in the bearing bore. **This operation is necessary as a corrosion preventive.**

(3) Install foam gasket on the studs of axle housing and carefully slide axle shaft assembly through oil seal and engage splines in differential side gear.

(4) Tap end of axle shaft lightly with a non-metallic mallet to position axle shaft bearing in housing bearing bore. Position retainer plate over axle housing studs. Install retainer nuts and tighten 30-35 foot-pounds. Start by tightening bottom nut.

(5) Repeat step (1) for right side of axle housing.

(6) Back off threaded adjuster of right axle shaft assembly until inner face of adjuster is flush with inner face of retainer plate. Carefully slide axle shaft assembly through oil seal and engage splines in differential side gears.

(7) Repeat step (4).

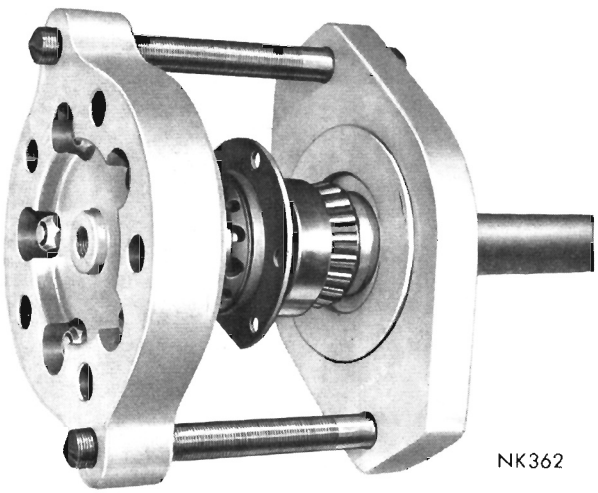

Fig. 13—Installing New Bearing and Collar

AXLE SHAFT END PLAY

CAUTION: When setting axle shaft end play, both rear wheels must be off the ground, otherwise a false end play setting will occur.

(1) Using a dial indicator mounted on the left brake support (Fig. 14), TURN THE ADJUSTER CLOCKWISE UNTIL BOTH WHEEL BEARINGS ARE SEATED AND THERE IS ZERO END PLAY IN THE AXLE SHAFTS. BACK OFF THE ADJUSTER COUNTERCLOCKWISE APPROXIMATELY FOUR NOTCHES TO ESTABLISH AN AXLE SHAFT END PLAY OF .008-.018 INCH.

(2) Tap end of left axle shaft lightly with a non-metallic mallet to seat right wheel bearing cup against adjuster, and rotate axle shaft several revolutions so that a true end play reading is indicated.

(3) Remove one retainer plate nut, install adjuster lock. If tab on lock does not mate with notch in adjuster, turn adjuster slightly until it does. Install nut and tighten 30-35 foot-pounds.

(4) Recheck axle shaft end play. If it is not within the tolerance of .008-.018 inch, then repeat adjustment procedure.

(5) Remove dial indicator and install brake drum, drum retaining clips and wheel.

REAR AXLE HOUSING

Removal

(1) Raise vehicle and support body at front of rear springs.

(2) Block brake pedal in the up position using a wooden block.

(3) Remove rear wheels.

(4) Disconnect hydraulic brake hose at connection on left side of underbody.

(5) Disconnect parking brake cable

To maintain proper drive line balance when reassembling, make scribe marks on the propeller shaft universal joint and the pinion flange before removal.

(6) Disconnect propeller shaft at differential yoke and secure in an upright position to prevent damage to front universal joint.

(7) Remove shock absorber from spring plate studs and loosen rear spring "U" bolt nuts and remove "U" bolts.

(8) Remove the assembly from vehicle.

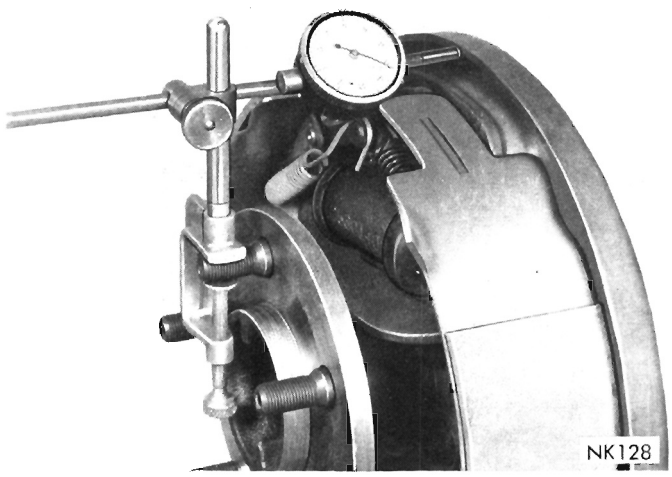

Fig. 14—Measuring Axle Shaft End Play

Installation

(1) With body of vehicle supported at front of rear springs, position the rear axle assembly spring seats over the spring center bolts.

(2) Install spring "U" bolts and tighten nuts to 45 foot-pounds and install shock absorbers on spring plate studs (DO NOT OVER TIGHTEN "U" BOLT NUTS.)

(3) Install propeller shaft (match scribe marks on propeller shaft universal joint and pinion flange). Tighten clamp screws to 15 foot-pounds.

(4) Connect parking brake cable.

(5) Connect hydraulic brake hose, bleed and adjust brakes.

(6) Install rear wheels.

(7) If carrier was removed from axle housing during the removal operation, fill axle with proper amount and type of lubricant; see "Specifications" in Lubrication section Group "O"

Welding Rear Axle Housing

The axle housing should be completely disassembled if it is to be welded with arc welding equipment. It is also possible to weld the assembled housing with gas welding equipment, if precaution is taken to protect gaskets and heat treated parts.

DIFFERENTIAL AND CARRIER

Removal

(1) Remove flanged axle drive shafts.

(2) Disconnect rear universal joint and support propeller up and out of the way to prevent damage to the front universal joint.

(3) Remove the rear axle lubricant.

(4) Loosen and remove the carrier-to-housing attaching nuts and lift the carrier assembly from axle housing.

Disassembly

Side play and runout check taken during disassembly will be very useful in reassembly.

(1) Mount carrier in Stand DD-1014 and attach dial indicator Tool C-430 or Tool C-3339 to differential carrier flange in a position so pointer of indicator squarely contacts back face of ring gear (Fig. 15). With a screw driver positioned between bearing cap and differential case flange, then using a prying mo-

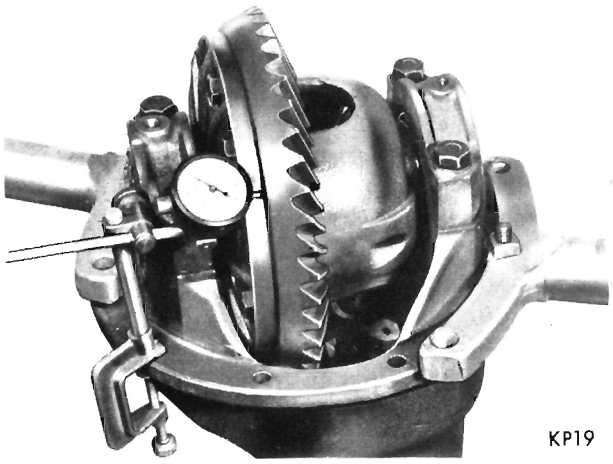

Fig. 15—Checking for Runout and Zero End Play

tion determine if side play is present. If side play is evident, remove adjuster lock and loosen adjuster slightly and retighten adjuster sufficiently to eliminate side play.

(2) Rotate drive gear several complete revolutions while noting total indicator reading. Mark drive gear and differential case at point of maximum runout. The marking of differential case will be very useful later in checking differential case runout. Total indicator reading should be no more than .005 inch. If runout exceeds .005 inch the differential case may be damaged, and a second reading will be required after drive gear has been removed. This operation is covered during "Differential Disassembly". Remove dial indicator.

(3) With Tool C-3281 hold companion flange and remove drive pinion nut and Belleville washer.

(4) Install companion flange remover Tool C-452 and remove flange (Fig. 16).

(5) Using a screwdriver and hammer, remove the drive pinion oil seal from the carrier.

(6) While holding one hand over nose end of carrier, invert carrier in stand. The front pinion bearing cone, shim pack and bearing spacer (where used) will drop from carrier.

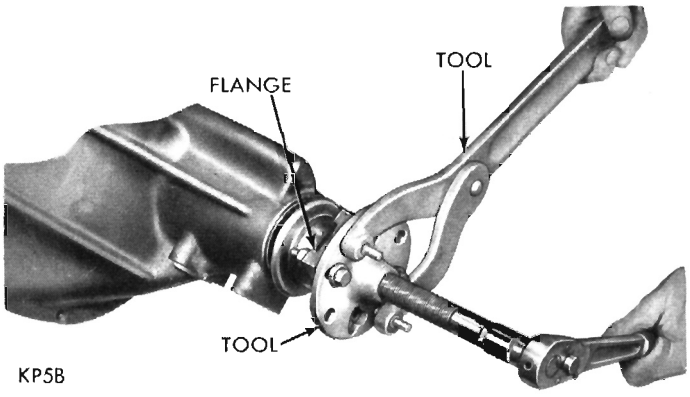

Fig. 16—Removing Companion Flange

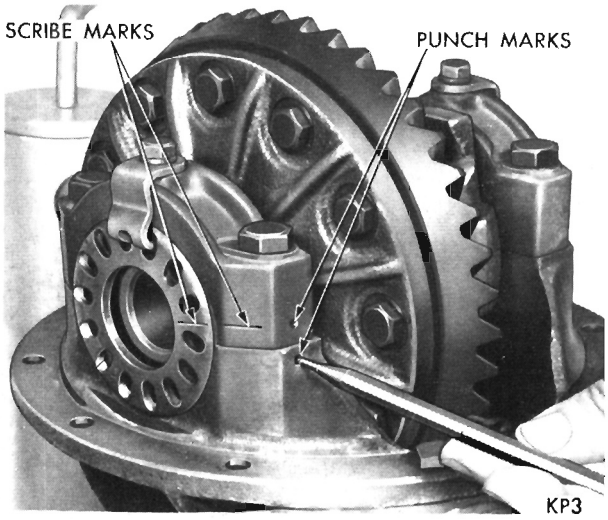

Fig. 17—Marking Bearing Caps and Adjusters

(7) Apply identifying punch marks on differential bearing pedestals of carrier, differential bearing caps and bearing adjusters for reassembly purposes (Fig. 17).

(8) Remove both differential bearing adjuster lock screws and locks.

(9) With a 3/4 inch socket, loosen bearing cap bolts (one on each side) and back off bearing adjusters slightly using spanner wrench Tool C-406A; to remove differential bearing preload. Remove bearing cap bolts, caps and bearing adjusters.

(10) Remove differential and ring gear assembly with bearing cups. Differential bearing cups must be kept with respective bearing cones.

(11) Remove drive pinion and rear bearing assembly from carrier.

Rear Pinion Bearing Removal

(1) Remove drive pinion rear bearing from small stem pinion with Tool C-293 and four (4) No. 36 plates, or four (4) No. 37 plates on large stem step pinion or large stem pinion using a collapsible spacer (Fig. 18).

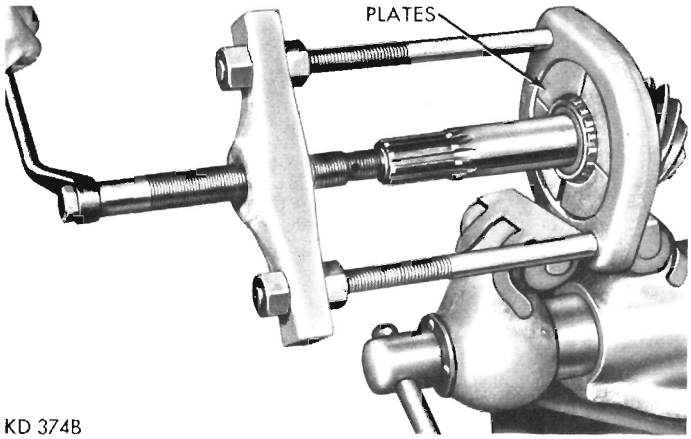

Fig. 18—Removing Drive Pinion Rear Bearing

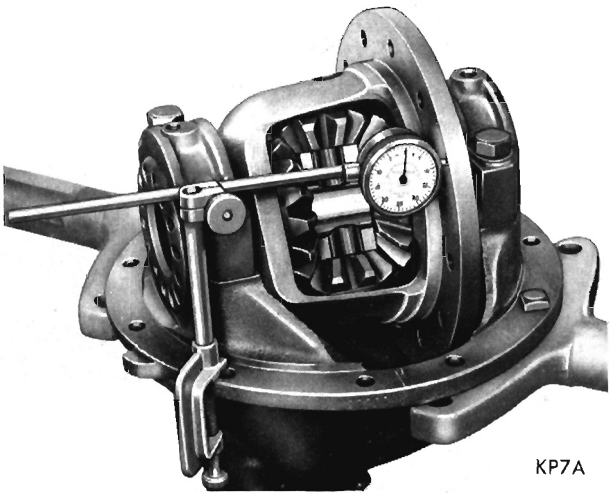

Fig. 19—Checking Drive Gear Mounting Flange Runout

(2) Using a flat end brass drift, remove front and rear pinion bearing cups.

DIFFERENTIAL CASE

Disassembly

(1) Mount differential case and ring gear assembly in a vise equipped with soft jaws (brass).

(2) Remove drive gear bolts. BOLTS ARE LEFT HAND THREAD. With a non-metallic hammer, tap drive gear loose from differential case pilot and remove.

(3) If drive gear runout exceeded .005 inch in step 2 (under "Carrier Disassembly"), recheck the case as follows: Install differential case and respective bearing cups in carrier.

(4) Install bearing caps, cap bolts and bearing adjusters. Tighten bearing cap bolts down lightly and screw in both adjusters with spanner wrench Tool C-406A.

(5) Tighten cap bolts and adjusters sufficiently to prevent any side play in bearings.

(6) Attach a dial indicator Tool C-430 or Tool C-3339 to carrier flange so pointer of indicator squarely contacts drive gear surface of differential case flange between outer edge flange and drive gear bolt holes (Fig. 19).

(7) Rotate differential case several complete revolutions while noting total indicator reading. This reading must not exceed .003 inch runout. If runout is in excess of .003 inch, differential case must be replaced. **In a case where the runout does not exceed .003 inch it is often possible to reduce the runout by positioning the drive gear 180° from point of maximum runout when reassembling drive gear on differential case.**

(8) With a flat nose drift and hammer, remove differential pinion shaft lock pin from back side of drive gear flange. (The hole is reamed only part way through, making it necessary to remove lock pin from one direction.)

(9) With a brass drift and hammer, remove differential pinion shaft and axle drive shaft thrust block.

(10) Rotate differential side gears until each differential pinion appears at large opening of case. Remove each pinion and thrust washer at that time.

(11) Remove both differential side gears and thrust washers.

Cleaning and Inspection (Figs. 20, 21 and 22)

(1) Clean all parts in a fast evaporating mineral spirits or a dry cleaning solvent and with the exception of bearings, dry with compressed air.

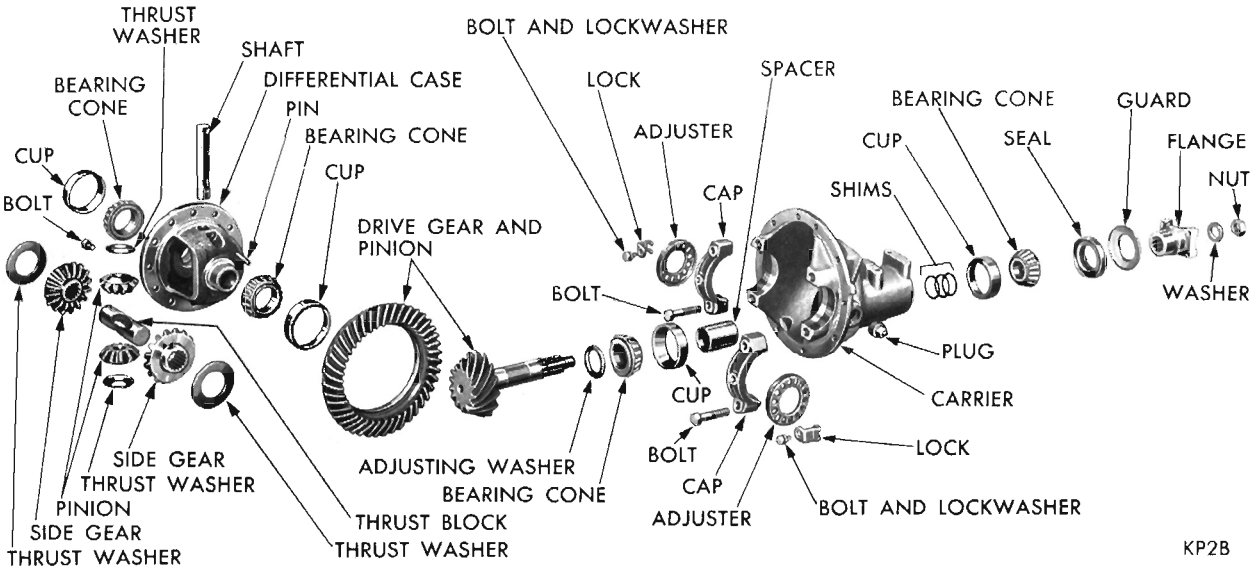

Fig. 20—Differential Carrier Assembly (Small Stem Step Pinion)

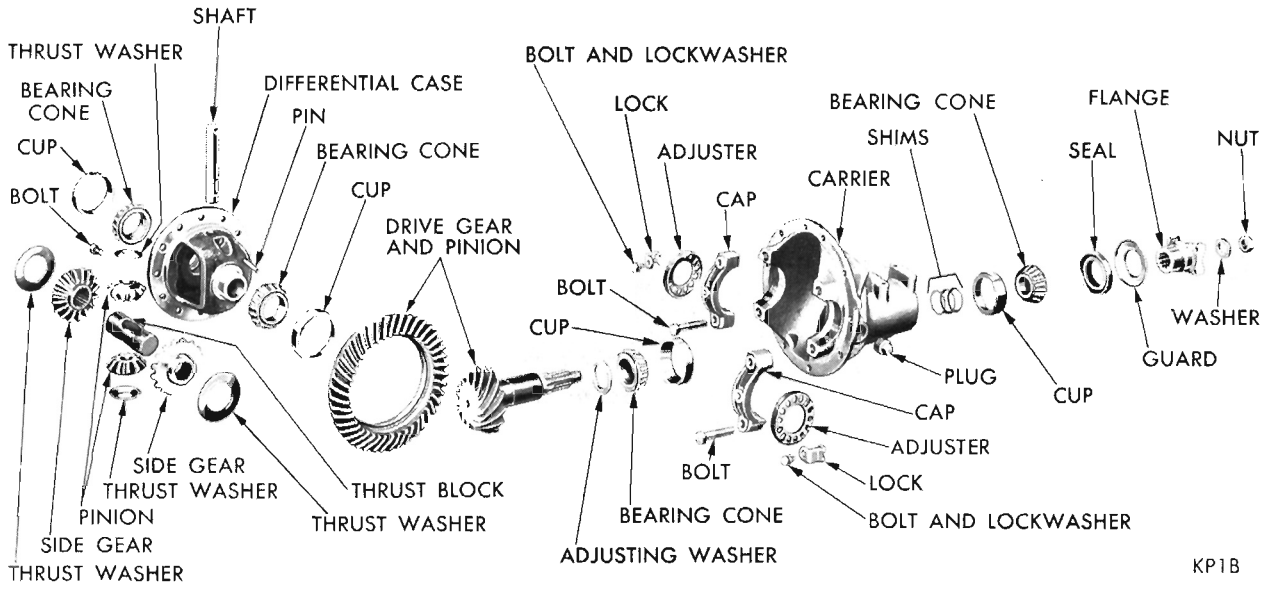

Fig. 21—Differential Carrier Assembly (Large Stem Step Pinion)

(2) Inspect differential bearing cones, cups and rollers for pitting, spalling or other visible damage. If replacement is necessary, remove bearing cones from differential case with Tool C-293 and adapter plates No. 43 (Fig. 23).

(3) Inspect differential case for elongated or enlarged pinion shaft hole. The machined thrust washer surface areas and counterbores must be smooth and without metal deposits or surface imperfections. If any of the above conditions exist, satisfactory correction must be made or the case replaced. Inspect case for cracks or other visible damage which might render it unfit for further service.

(4) Inspect differential pinion shaft for excessive wear in contact area of differential pinions. Shaft should be smooth and round with no scoring or metal pickup.

(5) Inspect differential side gears and pinions, they should have smooth teeth with a uniform contact pattern without excessive wear or broken surfaces. The differential side gear and pinion thrust washers should be smooth and free from any scoring or metal pickup.

(6) Inspect axle shaft thrust block for excessive wear or visible damage. The wear surface on the opposite ends of the blocks, must be smooth.

(7) Inspect differential pinion shaft lock pin for damage or looseness in case. Replace pin or case as necessary.

(8) Inspect drive gear and pinion for worn or chipped teeth or damaged attaching bolt threads. If replacement is necessary, replace both the drive gear

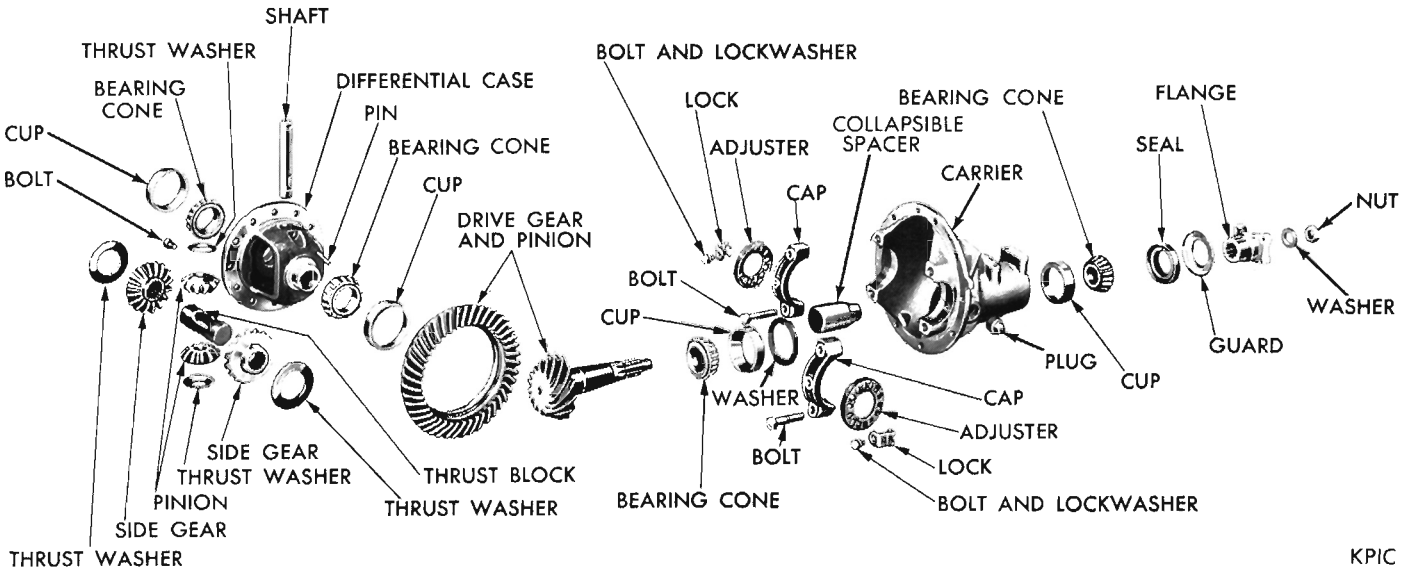

Fig. 22—Differential Carrier Assembly (Large Stem Tapered Pinion)

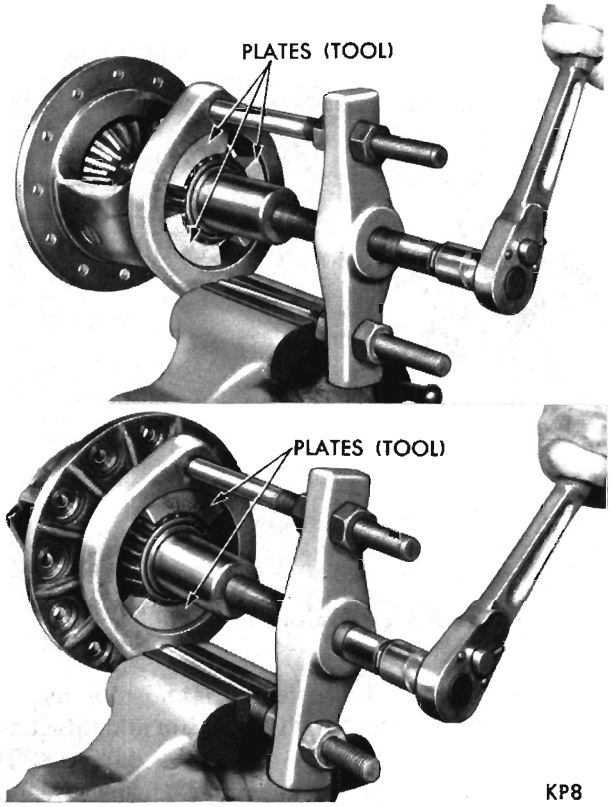

Fig. 23—Removing Differential Bearings

and drive pinion as they are available in matched sets only.

(9) Inspect drive pinion bearing cones, cups and rollers for pitting, spalling, excessive wear, or other visible damage. If inspection reveals that either are unfit for further service, replace both cup and cone.

(10) Inspect differential carrier for cracks or other visible damage which would render it unfit for further service. Raised metal on the shoulder of bearing cup bores incurred in removing pinion cups should be flattened by use of a flat nose punch.

(11) Inspect drive pinion for damaged bearing journals and mounting shim surface or excessively worn splines. If replacement is necessary, replace both the drive pinion and drive gear as they are available in matched sets only.

(12) Inspect companion flange for cracks, worn splines, pitted, rough or corroded oil seal contacting surface. Repair or replace companion flange as necessary.

(13) Inspect drive pinion bearing shim pack for broken, damaged or distorted shims, or Collapsible spacer. Replace if necessary during establishment of pinion bearing preload.

ASSEMBLY

LUBRICATE ALL PARTS BEFORE ASSEMBLY WITH LUBRICANT AS SPECIFIED IN (LUBRICATION GROUP "O")

(1) Install thrust washers on differential side gears and position gears in case.

(2) Place thrust washers on both differential pinions and through large window of differential case, mesh the pinion gears with the side gears, having pinions exactly 180 degrees opposite each other.

(3) Rotate side gears 90 degrees to align pinions and thrust washers with differential pinion shaft holes in case.

(4) From pinion shaft lock pin hole side of case, insert slotted end of pinion shaft through case, and the conical thrust washer, and just through one of the pinion gears.

(5) Install thrust block through side gear hub, so that slot is centered between the side gears.

(6) While keeping all of these parts in proper alignment, push pinion shaft into case until locking pin hole in pinion shaft is in exact alignment with its respective hole in case. Install pinion shaft lock pin through hole in case from pinion shaft side of drive gear flange. **The contacting surfaces of the drive gear and differential case flange must be clean and free of all burrs.**

(7) Using an Arkansas stone, relieve the sharp edge of the chamfer on the inside diameter of the ring gear (Fig. 24). **This is very important otherwise during the installation of ring gear on differential case, the sharp edge will remove metal from the pilot diameter of case and can get imbedded between differential case flange and gear; causing gear not to seat properly.**

(8) Position drive gear on differential case pilot, aligning threaded holes of drive gear with those in differential case flange.

(9) Insert drive gear screws (LEFT HAND THREADS) through case flange and into drive gear. After all cap screws are properly started, tap drive gear against differential case flange with a non-metallic mallet.

(10) Position unit between brass jaws of a vise and

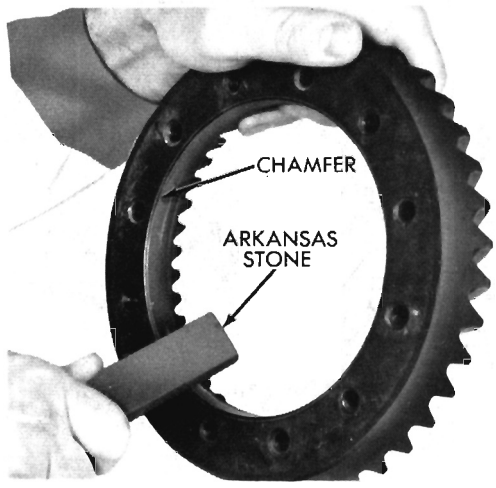

Fig. 24—Stoning Chamfer of Ring Gear

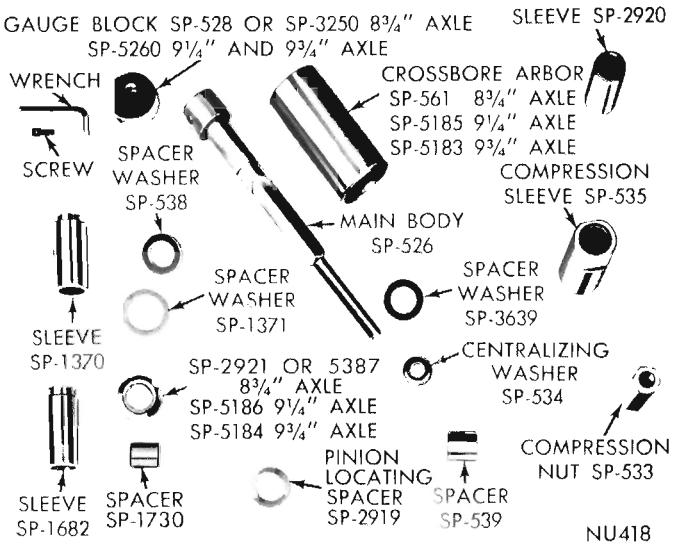

Fig. 25—Rear Axle Setting Gauge Tool C-758-D4

alternately tighten each cap screw to 55 foot-pounds.

(11) Position each differential bearing cone on hub of differential case (taper away from drive gear) and with installing Tool C-4086 install bearing cones. An arbor press may be used in conjunction with installing tool.

CAUTION: Never exert pressure against the bearing cage, since this would damage the bearing.

PINION BEARING CUP INSTALLATION

(1) Position pinion bearing cups squarely in bores of carrier. Assemble Tool C-758-D4 (Fig. 25) by placing spacer SP-2919 followed by rear pinion bearing cone over main screw of tool and inserting it into carrier from gear side.

(2) Place front pinion bearing cone over main screw of tool followed by compression sleeve SP-535, centralizing washer SP-534, and main screw nut SP-533. Hold compression sleeve with the companion flange holding Tool C-3281 and tighten nut (Fig. 24) allowing tool to rotate as nut is being tightened in order not to brinnel bearing cone or cups. **Do not remove tool after installing cups.**

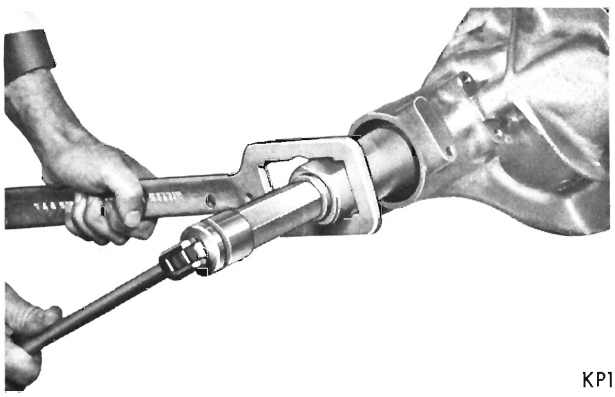

Fig. 26—Seating Bearing Cups in Carrier Housing

PINION BEARING PRELOAD AND DEPTH OF MESH SETTING USING TOOL C-758-D4

The 8-3/4" axle incorporates three types of pinions. The method of determining pinion depth of mesh and bearing preload are the same for the small and large stem step pinions; however, the sequence of making the two adjustments change. Small stem pinions require the bearing preload adjustment first while large stem step pinions require the depth of mesh adjustment first. The large stem pinion using a collapsible spacer for bearing preload requires the depth of mesh setting first also.

The position of the drive pinion with respect to the drive gear (depth of mesh) is determined by the location of the bearing cup shoulders in the carrier and by the portion of the pinion in back of the rear bearing. The thickness of the rear pinion bearing mounting shim suitable for the carrier can be determined by using Tool C-758-D4.

PINION BEARING PRELOAD WITH BEARING SPACER (Small Stem Step Pinion)

Bearing Preload

(1) With tool installed in carrier, remove main screw nut, centralizing washer, compression sleeve and front pinion bearing cone.

(2) Install the pinion bearing spacer, larger bore of spacer next to rear bearing.

(3) Position sleeve (SP-1730) in front bearing cone making sure sleeve is flush with rear of bearing.

(4) Position original shims, previously removed from drive pinion stem, over the sleeve and slide the sleeve, bearing and shims over main screw of tool until shims rest against spacer (Fig. 27).

(5) Install tool compression sleeve (SP-535) (square end out), centralizing washer (SP-534) and main screw nut (SP-533). Turn carrier in stand to bring nut on top.

(6) Tighten tool nut to 240 foot-pounds with a torque wrench, using holding Tool C-3281 on the

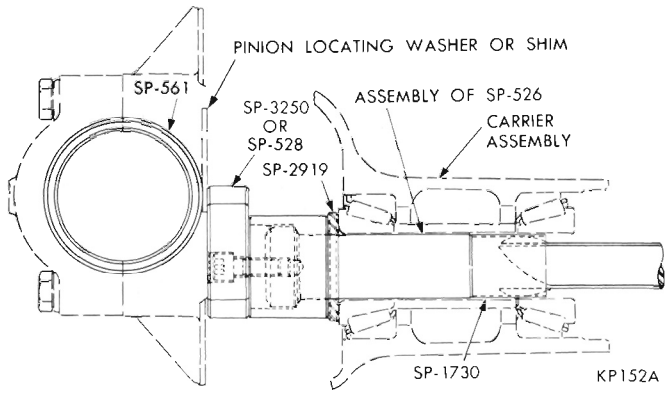

Fig. 27—Pinion Preload with Spacer (8-3/4" Ring Gear)

compression sleeve to hold the assembly in several positions to make a complete revolution while tightening. Remove holding tool and rotate the pinion several revolutions in both directions to align the bearing rollers. Recheck torque to 240 foot-pounds (torque may have diminished as bearing rollers were aligned by rotating). **Correct bearing preload reading can only be obtained with nose of carrier up.**

(7) Using inch-pound torque wrench C-685, measure pinion bearing preload by rotating pinion with handle of wrench floating, read the torque while wrench is moving through several complete revolutions. Correct preload setting is 20-30 inch-pounds for a new bearing and 0-15 inch-pounds for original bearing. Bearing preload should be uniform during complete revolution. A reading that varies considerably during rotation of pinion indicates a binding condition which requires correction. **Use a thinner shim pack to increase preload and a thicker shim pack to decrease preload.** Preload shims are available in two thousandths of an inch increments from .014-.026 inch.

After correct pinion bearing preload is set, **DO NOT REMOVE THE TOOL.**

Depth of Mesh

(1) Reverse carrier in stand and install gauge block SP-528 on end of tool and securing it to tool with Allen screw. The flat portion of gauge block should be facing differential bearing pedestals (Fig. 28). Tighten screw with Allen wrench.

(2) Position arbor SP-561 (part of Tool C-758-D4) in differential bearing pedestals of carrier (Fig. 29). Center the arbor so that an approximate equal distance is maintained at both ends. Position differential bearing caps and attaching bolts on carrier pedestals, and insert a piece of .002 inch shim stock between arbor and each cap. Tighten cap bolts to 10 foot-pounds.

(3) Select a rear pinion bearing mounting shim which will fit between cross arbor and gauge block. This fit must be snug but not too tight (similar to the pull of a feeler gauge) (Fig. 30). This shim is then used in determining the correct thickness shim for installation.

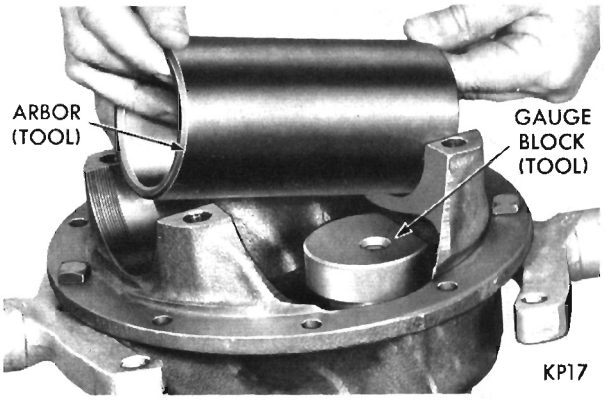

Fig. 29—Installing Arbor in Carrier

(4) To select a shim for installation, read the marking on end of pinion head (—0, —1, —2, +1, +2 etc.). When marking is —(minus), add that amount to the thickness of shim selected in step (3). When the marking is +(plus), subtract that amount. Example: With a shim .086 inch thick and a pinion marked —2, install a shim .088 inch thick. (086 + .002 = .088). Example: With a shim .086 inch thick and a pinion marked +2, install a washer .084 inch thick, (.086 — .002 = .084) or when a shim .086 inch thick is too loose and .088 inch too tight, use .086 inch shim. Treat other pinion markings in a similar manner. Shims are available in two thousandths of an inch increments. Mounting shims differ in diameter, depending on which pinion they are used on.

(5) Remove tool arbor from carrier.

(6) Remove tool and bearings out of carrier.

(7) Remove shims, spacer, tool sleeve and rear bearing cone from tool main screw.

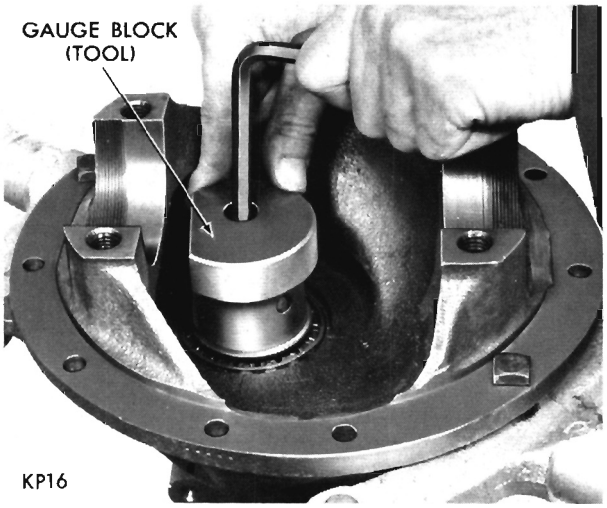

Fig. 28—Installing Gauge Block on Tool



Fig. 30—Determining Spacer Thickness

(8) With stem of pinion facing up, install correct shim on pinion stem. **Shims are chamfered on one side and must be installed on the pinion stem with chamfered side toward pinion head.**

(9) Position rear bearing cone on pinion stem (small side away from pinion head). Make certain that the contacting surfaces of correct shim, pinion head shim contact surface and rear bearing cone are perfectly clean and free of any foreign particles.

(10) Using installing Tool DD-996 press bearing on pinion stem. An arbor press may be used in conjunction with tool.

(11) Install bearing tubular spacer on pinion stem (large bore facing rear bearing cone).

(12) Install selected shim pack.

(13) Lubricate front and rear pinion bearing cones with lubricant as specified in (Lubrication Group "O").

(14) Position front pinion bearing cone in its cup in carrier.

(15) Apply a light coat of sealer in seal bore of carrier and install drive pinion oil seal into carrier using Tool C-3980 (double lip synthetic rubber oil seal) or Tool C-3656 (single lip leather oil seal). The proper tool must be used in order to position the seal the proper depth into the carrier casting.

(16) Insert drive pinion and bearing assembly up through carrier. While supporting pinion in carrier, install companion flange with installing Tool C-496 or DD-999 and holding Tool C-3281.

(17) Remove tools and install Belleville washer (convex side of washer up) and pinion nut.

(18) Hold companion flange with holding Tool C-3281 and tighten pinion nut to 240 foot-pounds. Rotate pinion several revolutions in both directions to align bearing rollers. Recheck torque to 240 foot-pounds (torque may have diminished as bearing rollers were aligned by rotating).

PINION BEARING PRELOAD (Large Stem Step Pinion)

Inspect bearing cups and carrier for grit and dirt or other foreign material. Clean all parts in a fast evaporating mineral spirits or a dry cleaning solvent and with the exception of bearing cones, dry with compressed air.

(1) Assemble spacer SP-2921 to main section of tool followed by spacer SP-1730. Install rear pinion bearing cone over spacer SP-1730 and against spacer SP-2921 (Fig. 31).

(2) Insert assembly into carrier and install front pinion bearing cone over tool shaft and in its proper position in bearing cup. Install tool spacer, tool thrust washer and tool nut on shaft.

(3) With nose of carrier up, place flange holding Tool C-3281 on compression sleeve. Allow assembly to rotate while tightening nut to not more than 25-50 foot-pounds. **Always make sure bearing cones are lubricated with hypoid gear lubricant.**

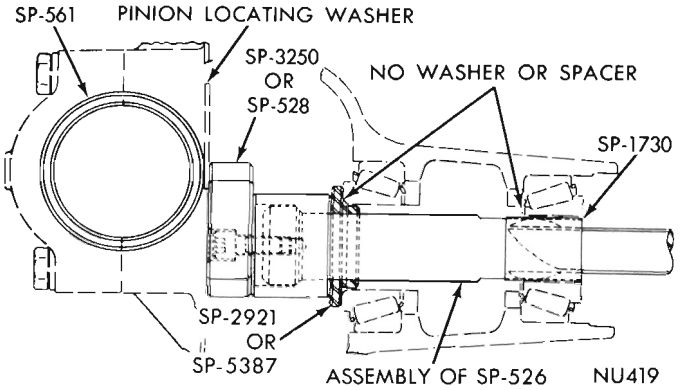

Fig. 31—Tool C-758-D4 Installed in Housing (8-3/4" Large Pinion)

(4) Turn tool several complete revolutions in both directions to permit bearing rollers to seat. After bearing rollers are properly seated, check bearing preload by rotating tool with an inch-pound torque wrench. The correct bearing preload should be from 20-30 inch-pounds for new bearings and 0-15 inch-pounds for the original bearings.

(5) With proper bearing preload set, invert carrier in stand and install gauge block SP-528 or SP-3250 to the main screw attaching it with Allen screw securely (Fig. 28). The flat portion of gauge block should be facing differential bearing pedestals.

(6) Position tool arbor SP-561 in differential bearing pedestals of carriage (Fig. 29). Center the arbor so that an approximate equal distance is maintained at both ends. Position differential bearing caps and attaching bolts on carrier pedestals, and insert a piece of .002 inch shim stock between arbor and each cap. Tighten cap bolts to 10 foot-pounds.

(7) Select a rear pinion bearing mounting shim which will fit between cross arbor and gauge block. This fit must be snug but not too tight (similar to the pull of a feeler gauge. (Fig. 30). This shim is then used in determining the correct thickness shim for installation.

(8) To select a shim for installation, read the marking on end of pinion head (—0, —1, —2, +1, +2, etc.). When marking is —, (minus) add that amount to the thickness of shim selected in step (7). When the marking is + (plus), subtract that amount. Example: With a shim .086 inch thick and a pinion marked —2, install a shim .088 inch thick (.086 + .002 = .088). Example: With a shim .086 inch thick and a pinion marked +2, install a washer .084 inch thick, (.086 — .002 = .084) or when a shim .086 inch thick is too loose and .088 inch too thick, use .086 inch shim. Treat other pinion markings in a similar manner. Shims are available in two thousandths of an inch

increments. Mounting shims differ in diameter, depending on which pinion they are used on.

(9) Remove differential bearing caps and remove tool arbor from carrier.

(10) Reverse carrier in stand so nut of tool is in upright position. Loosen compression nut, and support lower portion of tool in carrier with one hand, remove tool nut, centering washer and compression sleeve. Lower tool down and out of carrier.

(11) Remove rear pinion bearing cone from tool.

(12) Remove front pinion bearing cone from carrier housing.

(13) With stem of drive pinion facing up, add rear pinion bearing mounting shim you selected on pinion stem. **Shims are chamfered on one side and must be installed on the pinion stem with chamfered side toward pinion head.**

(14) Position rear pinion bearing cone on pinion stem (small side away from pinion head). Make certain that the contacting surfaces of correct shim, pinion head shim contact surface and rear bearing cone are perfectly clean and free of any foreign particles.

(15) Lubricate front and rear pinion bearing cones with hypoid gear lubricant. Install rear bearing cone onto pinion stem, using Tool DD-996, press bearing cone into place. An arbor press may be used in conjunction with tool.

(16) Insert pinion and bearing assembly up through carrier and install the original preload shim pack on pinion stem.

(17) Install front pinion bearing cone on pinion stem followed by drive pinion flange, bellville washer and nut. Using flange holding Tool C-3281 and torque wrench, tighten pinion nut to 240 foot-pounds. Hold the assembly in several positions to make a complete revolution while tightening.

(18) Remove holding tool and rotate tool several complete revolutions in both directions to permit bearing roller to seat. Recheck torque to 240 foot-pounds (torque may have diminished as bearing rollers seated).

(19) Measure pinion bearing preload by rotating pinion using an inch-pound torque wrench. The correct preload specifications are 20-30 inch-pounds for new bearings and 0-15 for original bearings. Correct bearing preload readings can only be obtained with nose of carrier in up right position. Bearing preload should be uniform during complete revolution. A reading that varies during rotation indicates a binding condition which should be corrected. **Use a thinner shim pack to increase preload and a thicker shim pack to decrease preload.** Preload shims are available in two thousandths of an inch increments from .014-.026 inch.

(20) Loosen and remove drive pinion nut, washer and flange after proper bearing preload has been established.

(21) Apply a light coat of sealer in seal bore of carrier and install drive pinion oil seal into carrier using Tool C-3980 (double lip synthetic rubber oil seal) or Tool C-3656 (single lip leather oil seal). The proper tool must be used in order to position the seal the proper depth into the carrier casting.

(22) While supporting pinion in carrier, install companion flange with installing Tool C-496 or DD-999 and holding Tool C-3281.

(23) Remove tools and install Belleville washer (convex side of washer up) and pinion nut.

(24) Hold universal joint flange with holding Tool C-3281 and tighten pinion nut to 240 foot-pounds. Rotate pinion several revolutions in both directions to align bearing rollers. Recheck torque to 240 foot-pounds (torque may have diminished as bearing rollers were aligned by rotating).

DEPTH OF MESH
(Large Stem Pinion With Collapsible Spacer)

Inspect differential bearing cups and cones, carrier for grit and dirt or other foreign material. Clean all parts in fast evaporating mineral spirits or a dry cleaning solvent and with the exception of bearing cones, dry with compressed air. **Front Pinion Bearing Cone and Cup Must Never Be Reused Under Any Circumstances.**

(1) Assemble spacer SP-5387 to main section of tool followed by spacer SP-1730. Install rear pinion bearing cone over spacer SP-1730 and against spacer SP-5387 (Fig. 31).

(2) Insert assembly into carrier and install front pinion bearing cone over tool shaft and in its proper position in bearing cup. Install tool spacer, tool thrust washer and tool nut on shaft.

(3) With nose of carrier up, place flange holding Tool C-3281 on compression sleeve. Allow assembly to rotate while tightening nut to not more than 25-50 foot-pounds. **Always make sure bearing cones are lubricated with hypoid gear lubricant.**

(4) Turn tool several complete revolutions in both directions to permit bearing rollers to seat. After bearing rollers are properly seated, check bearing preload by rotating tool with an inch-pound torque wrench. The correct bearing preload should be from 20-30 inch-pounds for new bearings and 0-15 inch-pounds for the original bearings.

(5) With proper bearing preload set, invert carrier in stand and install gauge block SP-528 or SP-3250 to the main screw attaching it with Allen screw securely (Fig. 28). The flat portion of gauge block should be facing differential bearing pedestals.

(6) Position tool arbor SP-561 in differential bearing pedestals of carrier (Fig. 29). Center the arbor so

that an approximate equal distance is maintained at both ends. Position differential bearing caps and attaching bolts on carrier pedestals, and insert a piece of .002 inch shim stock between arbor and each cap. Tighten cap bolts to 10 foot-pounds.

(7) Select a rear pinion bearing mounting shim which will fit between cross arbor and gauge block. This fit must be snug but not too tight (similar to the pull of a feeler gauge. (Fig. 30). This shim is then used in determining the correct thickness shim for installation.

(8) To select a shim for installation, read the marking on end of pinion head (—0, —1, —2, +1, +2, etc.). When marking is —, (minus) add that amount to the thickness of shim selected in step (7). When the marking is + (plus), subtract that amount. Example: With a shim .036 inch thick and a pinion marked —2, install a shim .038 inch thick (.036 + .002 = .038). Example. With a shim .036 inch thick and a pinion marked +2, install a washer .034 inch thick, (.036 — .002 = .034) or when a shim .036 inch thick is too loose and .038 inch too thick, use .036 inch shim. Treat other pinion markings in a similar manner. Shims are available in one thousandths of an inch increments.

(9) Remove differential bearing caps and remove tool arbor from carrier.

(10) Reverse carrier in stand so nut of tool is in upright position. Loosen compression nut, and support lower portion of tool in carrier with one hand, remove tool nut, centering washer and compression sleeve. Lower tool down and out of carrier.

(11) Remove front pinion bearing cone from carrier housing.

(12) Using a suitable brass drift positioned in recesses of carrier casting, remove rear pinion bearing cup.

(13) Install the shim you previously selected into rear pinion bearing cup cavity of carrier casting followed by pinion bearing cup squarely in bore.

(14) Assemble Tool C-758-D4 by placing spacer SP-5387 followed by rear pinion bearing cone over main screw of tool and inserting it into carrier from gear side.

(15) Place front pinion bearing cone over main screw of tool followed by compression sleeve SP-535, centralizing washer SP-534, and main screw nut SP-533. Hold compression sleeve with companion flange holding Tool C-3281 and tighten nut allowing tool to rotate as nut is being tightened in order not to brinnel bearing cone or cups. Make sure bearing cup is properly seated against mounting shim and carrier casting.

(16) Loosen compression nut and support lower portion of tool in carrier with one hand, remove tool nut, centering washer and compression sleeve. Lower tool down and out of carrier.

PINION BEARING PRELOAD (Large Stem Pinion With Collapsible Spacer)

(1) Position rear pinion bearing cone on pinion stem (small side away from pinion head). Make certain that the pinion head contact surface and rear bearing cone are perfectly clean and free of any foreign particles.

(2) Lubricate front and rear pinion bearing cones with hypoid gear lubricant. Install rear pinion bearing cone onto pinion stem, using Tool C-3095, press bearing cone into place. An arbor press may be used in conjunction with tool.

(3) Insert drive pinion and bearing assembly up through carrier and install collapsible spacer followed by front pinion bearing cone on pinion stem.

(4) Apply a light coat of sealer in seal bore of carrier casting and install drive pinion oil seal into carrier using Tool C-3980 (double lip synthetic rubber oil seal) or Tool C-3656 (single lip leather oil seal). The proper tool must be used in order to position the seal the proper depth into the carrier casting.

(5) While supporting pinion in carrier, install companion flange with installing Tool C-496 or DD-999 and holding Tool C-3281.

(6) Remove tools and install Belleville washer (convex side of washer up) and pinion nut.

(7) Hold universal joint flange with holding Tool C-3281 and tighten pinion nut to remove end play in pinion, while rotating the pinion to insure proper bearing seating.

(8) Remove holding tool and rotate pinion several complete revolutions in both directions to permit bearing rollers to seat.

(9) Tighten pinion nut to 100 foot-pounds and measure pinion bearing preload by rotating pinion using an inch-pound torque wrench. The correct preload specifications are 20-35 inch-pounds for new bearings. Correct bearing preload readings can only be obtained with nose of carrier in upright position. Continue tightening of pinion nut in small increments and checking pinion bearing preload until proper preload is obtained. Bearing preload should be uniform during **complete** revolution. A preload reading that varies during rotation indicates a binding condition which has to be corrected. The assembly is unacceptable if final pinion nut torque is below 170 foot-pounds or pinion bearing preload is not within the correct specifications.

NOTE: UNDER NO CIRCUMSTANCES SHOULD THE PINION NUT BE BACKED OFF TO LESSEN PRELOAD. IF THIS IS DONE A NEW COLLAPSIBLE SPACER MUST BE INSTALLED AND NUT RETIGHTENED UNTIL PROPER PRELOAD IS OBTAINED.

PINION BEARING PRELOAD AND PINION SETTING (Without Using Tool C-758-D4)

If the differential assembly was satisfactorily quiet

before being disassembled, the drive pinion may be assembled with the original components. If replacement parts are installed, a complete readjustment is necessary; the proper thickness shim must be selected and installed. The drive gear and pinion are manufactured and lapped in matching sets and are available in matched sets only. The adjustment position in which the best tooth contact is obtained is marked on the end of the pinion head.

To obtain the proper pinion setting in relation to the drive gear, the correct thickness mounting shim must be selected before the drive pinion is installed in the carrier. The pinion bearing mounting shims are available in two thousandths increments from .084 to .100 inch (small stem or large stem step type pinions) or .020-.038 inch in increments of .001 inch (large stem pinion with collapsible spacer). To select the proper thickness shim, proceed as follows: It will be noted that the head of the drive pinion is marked with a plus (+) or minus (—) sign followed by a number ranging from 1 to 4, or zero (0) marking.

Depth of Mesh

If the old and new pinion have the same marking and if the original bearing is being reused, use a mounting shim of the same thickness. But if the old pinion is marked zero (0) and the new pinion is marked +2, try a .002 inch thinner shim. If the new pinion is marked —2, try a .002 inch thicker shim.

Pinion Bearing Preload

If the bearings are being replaced, place the new bearing cup in position in the carrier and drive the cups in place with a suitable drift. After properly positioning the bearing cups in the carrier, assemble the drive pinion mounting shim (chamfered side down toward gear) on the drive pinion stem. Install the tubular spacer (if so equipped) and the preload shims on the pinion stems. Insert the pinion assembly into the carrier. Install the front pinion bearing cone, universal joint flange, Belleville washer (convex side of washer up) and nut. DO NOT INSTALL THE OIL SEAL. Rotate the drive pinion after tightening the flange nut to 240 foot-pounds, to properly seat the bearing rollers in the bearing cups. The preload torque required to rotate the pinion with the bearings oiled should be 20-30 inch-pounds for new bearings and 0—15 inch-pounds for used bearings. **Use a thinner shim pack to increase preload and a thicker shim pack to decrease preload.** After the correct pinion depth of mesh has been established and correct bearing preload obtained, remove the drive pinion flange. Apply a light coat of sealer to drive pinion oil seal and carrier casting bore and install drive pinion oil seal with Tool C-3980 (synthetic rubber seal) or Tool C-3656 (leather seal). Install the pinion flange, washer and nut and tighten nut to 240 foot-pounds.

Pinion Bearing Preload (Large Stem Pinion with Collapsible Spacer)

After selecting the correct pinion bearing mounting shim and installing it behind the rear pinion cup proceed as follows: Install the pinion assembly into the carrier. Install the new collapsible spacer followed by new front pinion bearing cone on pinion stem. Apply a light coat of sealer to drive pinion oil seal and carrier casting bore and install drive pinion oil seal with Tool C-3980 (synthetic rubber seal or Tool C-3656 (leather seal). Install universal joint flange, Belleville washer (convex side of washer up) and nut. Tighten the pinion nut to 150 foot-pounds and using an inch-pounds torque wrench rotate the pinion to determine preload. The correct preload specifications are 20-30 inch-pounds for new bearings. If preload is not correct, continue to tighten pinion nut in small increments and checking preload until preload on pinion bearings is correct. A minimum of 175 foot-pounds of torque is required on pinion nut. **Under no circumstances should the pinion nut be backed off to lessen preload. If this is done a new pinion bearing collapsible spacer must be installed and nut retightened until proper preload is obtained.**

Installation of Differential and Ring Gear in Carrier

(1) Holding differential and ring gear assembly with bearing cups on respective bearing cones, carefully install the assembly into carrier.

(2) Install differential bearing caps, on respective sides, making certain that identification marks on caps correspond with those on carrier. Install cap bolts and tighten bolts of each cap by hand.

(3) Install differential bearing adjusters, on respective sides, making certain that identification marks correspond. Screw adjuster in by hand. No attempt should be made to apply any excessive pressure at this time.

(4) Using spanner wrenches Tool C-406A to square bearing cups with bearing cone, turn adjusters "IN" until cups are properly square with bearings and end play is eliminated with some backlash existing between the drive gear and pinion (Fig. 32).

(5) Tighten one differential bearing cap bolt on each side to 85-90 foot-pounds.

DRIVE GEAR AND PINION BACKLASH

Correct drive gear and pinion backlash when properly set is .006 to .008 inch at point of minimum backlash.

(1) Attach a dial indicator Tool C-340 or C-3339 to

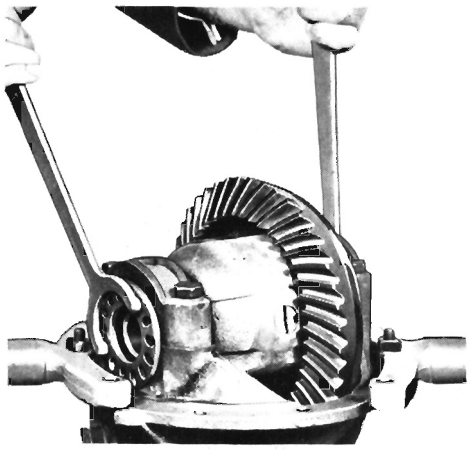

Fig. 32—Adjusting Differential Bearings

carrier flange so pointer of indicator is squarely contacting one drive gear tooth (drive side) (Fig. 33).

(2) Measure backlash between drive gear and pinion at four positions, approximately 90 degrees apart. After point of least backlash has been determined, mark drive gear. **Do not rotate drive gear from point of least backlash until all adjustments have been completed.**

(3) Using Tool C-406A (spanner wrench) turn both bearing adjusters equally (in same direction) until backlash between drive gear and pinion is .0005 to .0015 inch. **This backlash variation is given to permit alignment and installation of the bearing adjuster lock, lockwasher and attaching screw. The adjuster must only be turned in a clockwise direction and under no circumstances should be backed off.**

(4) Install adjuster lock on bearing cap, back-face side of drive gear. Tighten lock screw to 15 to 20 foot-pounds.

Differential Bearing Preload

(1) Turn bearing adjuster (tooth side of drive gear)

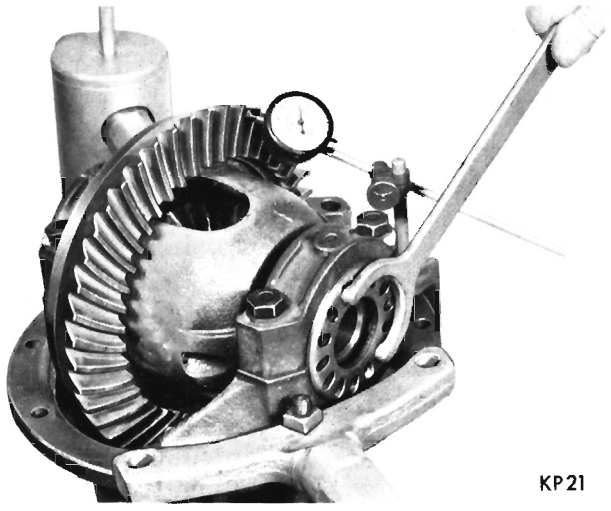

Fig. 33—Measuring Backlash Between Drive Gear and Pinion

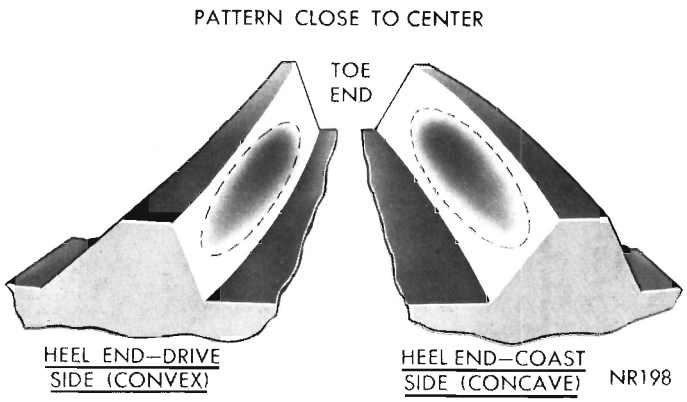

Fig. 34—Desired Tooth Contact Under Light Load

(Fig. 33) in a notch at a time (notch referred to is the adjuster lock holes) until backlash between drive gear and pinion is a minimum of .006 to .008 inch. This will preload differential bearings and establish correct backlash.

(2) Tighten the remaining two differential bearing cap bolts to 85-90 foot-pounds.

(3) Install remaining adjuster lock, lockwasher and attaching screw. Tighten to 15-20 foot-pounds.

GEAR TOOTH CONTACT PATTERN

The gear tooth contact pattern will disclose whether the correct rear pinion bearing mounting shim has been installed and the drive gear backlash set properly. Backlash between the drive gear and pinion must be maintained within the specified limits until correct tooth contact pattern is obtained.

(1) Apply a thin film of red or white lead on both the drive and coast side of the drive gear teeth. Rotate drive gear one complete revolution in both directions while load is being applied with a round bar or screwdriver between the carrier casting and differential case flange. This action will leave a distinct contact pattern on both the drive and coast side of the drive gear teeth.

(2) Observe the contact pattern on the drive gear teeth and compare with those in figures 34, 35 and 37

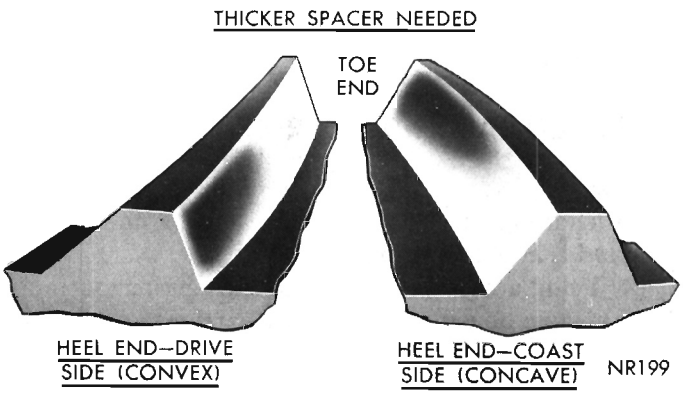

Fig. 35—Incorrect Tooth Contact Pattern (Increase Spacer Thickness)

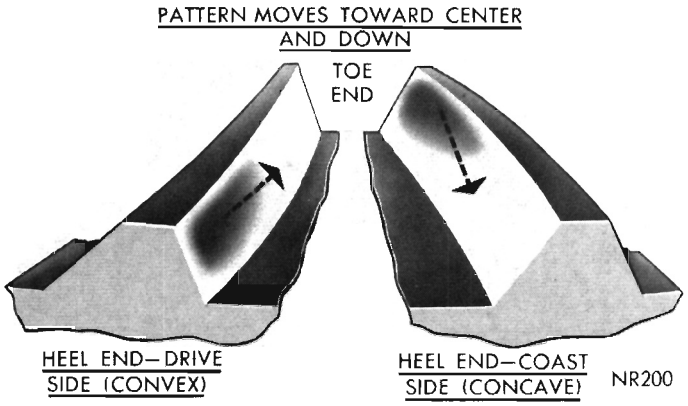

Fig. 36—Effect on Tooth Contact Pattern as Spacer Thickness is Increased

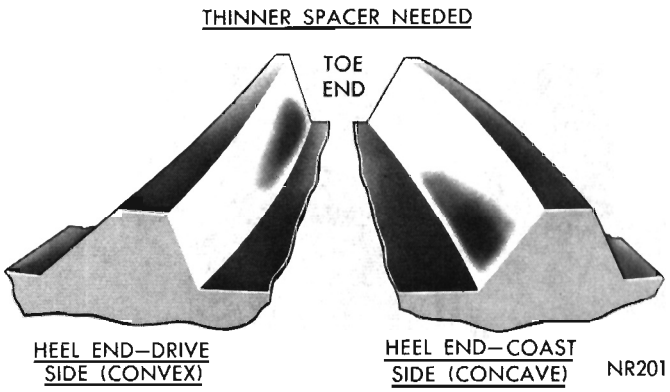

Fig. 37—Incorrect Tooth Contact Pattern (Decrease Spacer Thickness)

to determine if pattern is properly located. With pinion depth of mesh and gear backlash set properly, your contact pattern should resemble that in (Fig. 34). Notice that the correct contact pattern is well centered on both drive and coast sides of the teeth. When tooth contact patterns are obtained by hand, they are apt to be rather small. Under the actual operating load, however, the contact area increases.

(3) If after observing the contact pattern and you find it resembles that in (Fig. 35), the drive pinion is too far away from centerline of the ring gear, the contact pattern will appear high on the heel on drive side and high on toe on coast side. To correct this type tooth contact pattern, increase the thickness of the rear pinion bearing mounting spacer (Fig. 36), which will cause the high heel contact on drive side to lower and move toward the toe; the high toe contact on coast side will lower and move toward the heel.

(4) If after observing the contact pattern and you find it resembles that in (Fig. 37), the drive pinion is too close to the ring gear, the pattern will appear low on the toe on drive side and low heel contact on coast side. To correct this type tooth contact pattern, decrease the thickness of the rear pinion bearing mounting spacer (Fig. 38), which will cause the low toe contact on drive side to raise and move toward the heel; low heel contact on coast side will raise and move toward the toe.

DIFFERENTIAL AND CARRIER

Installation

(1) Thoroughly clean the gasket surfaces of the carrier and rear axle housing.

(2) Using a new gasket, install the carrier assembly into the axle housing. Tighten the carrier to axle housing nuts to 45 foot-pounds.

(3) Refer to "Installation of Rear Axle Shaft," when installing and setting axle shaft end play.

(4) Install propeller shaft (match scribe marks on propeller shaft universal joint and pinion flange). Tighten clamp screws to 15 foot-pounds.

(5) Remove wooden block from under brake pedal and bleed and adjust brakes.

(6) Install rear wheels and tighten to 65 foot-pounds.

LUBRICATION

Refill axle assembly with multi-purpose gear lubricant as defined by MIL-L-2105B on all rear axles. Chrysler Hypoid Lubricant is an oil of this type, available under **Part Number 2585317, and is suitable for standard conventional axles only.** Multi-Purpose Gear Lubricant available under Part Number 2933565 is required for Sure-Grip differential and also suitable for standard conventional axles.

Anticipated Temperature Range	Viscosity Grade
Above — 10°F.	SAE 90
As low as — 30°F.	SAE 80
Below — 30°F.	SAE 75

REMOVAL AND REPLACEMENT OF DRIVE PINION FLANGE AND OIL SEAL IN VEHICLE

On large stem carriers which use the collapsible spacer to obtain pinion bearing preload, the following

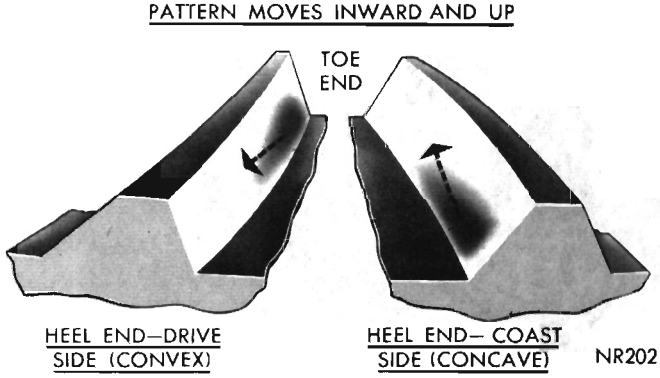

Fig. 38—Effect on Tooth Contact Pattern as Spacer Thickness is Decreased

procedure for the removal and replacement of the drive pinion flange and pinion oil seal must be followed to assure that the proper bearing preload is maintained in the axle assembly. If this procedure is not followed it could result in a premature failure of the axle.

(1) Raise vehicle on hoist and make scribe marks on propeller shaft, shaft universal joint, drive pinion flange and end of pinion stem.

(2) Disconnect propeller shaft at pinion flange and secure in an upright position to prevent damage to front universal joint.

(3) Remove the rear wheels and brake drums to prevent any drag or a possible false preload reading could occur.

(4) Using inch-pound torque wrench C-685 measure pinion bearing preload by rotating pinion with handle of wrench floating, read the torque while wrench is moving through several complete revolutions and record. **This operation is very important because preload must be carefully reset when reassembling.**

(5) With Tool C-3281 hold companion flange and remove drive pinion nut and Belleville washer.

(6) Install companion flange remover Tool C-452 and remove flange. Lower rear of vehicle to prevent lubricant leakage.

(7) Using a screwdriver and hammer, remove the pinion oil seal from the carrier and clean the oil seal seat.

(8) Check splines on pinion shaft stem to be sure they are free of burrs or are not worn badly. If burrs are evident remove them using crocus cloth by working in a rotational motion. Wipe the pinion shaft clean.

(9) Inspect companion flange for cracks, worn splines, pitted, rough or corroded oil seal contacting surface. Repair or replace companion flange as necessary.

(10) Apply a light coat of sealer in seal bore of carrier and install drive pinion oil seal into carrier using Tool C-3980 (Double lip synthetic rubber oil seal) or Tool C-3656 (single lip leather oil seal). The proper tool must be used in order to properly position the seal the correct depth into the carrier casting.

(11) Position companion flange on pinion stem being careful to match scribe marks made previously before removal.

(12) Install companion flange with installing Tool C-496 or DD-999 and holding Tool C-3281.

(13) Remove tool and install Belleville washer (convex side of washer up) and pinion nut.

(14) Hold universal joint flange with holding Tool C-3281 and tighten pinion nut to 100 foot-pounds. Rotate pinion several complete revolutions to assure that bearing rollers are properly seated. Using an inch-pound torque wrench C-685 measure pinion bearing preload. Continue tightening pinion nut and checking preload until preload is at the original established setting you found in step 4. Under no circumstances should the preload be more than 5 inch-pounds over the established setting found at time of checking in step 4 of procedure.

Bearing preload should be uniform during a complete revolution. A preload reading that varies during rotation indicates a binding condition which has to be corrected. The assembly is unacceptable if final pinion nut torque is below 170 foot-pounds or pinion bearing preload is not within the correct specifications.

CAUTION: Never back off the pinion nut to lessen pinion bearing preload. If the desired preload is exceeded a new collapsible spacer must be installed and nut retightened until proper preload is obtained. In addition, the universal joint flange must never be hammered on, or power tools used.

(15) Install propeller shaft (match scribe marks on propeller shaft universal joint and pinion flange). Tighten clamp screws to 15 foot-pounds.

(16) Install the rear brake drums and wheels and tighten nuts 65 foot-pounds.

(17) Raise the vehicle to a level position so axle assembly is at correct running position and check lubricant level. Add the correct type of lubricant required to bring lubricant to proper level.

REAR AXLE ASSEMBLY 9¼" AND 9¾" RING GEAR

INDEX

	Page
Axle Shaft and Bearings	31
Differential (Removal and Disassembly)	32
Differential (Cleaning and Inspection)	35
Differential Bearing Preload and Drive Gear and Pinion Backlash	41
Differential Case and Drive Gear (Installation)	37
Differential Case (Sure-Grip)	34
Differential Noise	31
Drive Pinion Depth Of Mesh Setting (Using Pinion Depth Gauge Tool DD 1244	38
Drive Pinion Depth Of Mesh Setting (Using Tool C-758-D4)	39
Gear Tooth Contact Pattern	41
Lubrication	43
Pinion Bearing Preload	41
Rear Axle Assembly (Removal)	32
Rear Axle Assembly (Installation)	42

GENERAL INFORMATION

With the increased torque output of the 440 cubic inch engine with Power Pak or the 426 cubic inch Hemi-Engine in vehicles equipped with 4 speed manual transmissions, two rear axle assemblies will

appear in those vehicles which are so equipped. The 9-1/4 inch diameter rear axle will be standard on Fury models with the 440 cubic inch engine both standard and Power Pak. The 9-3/4 inch diameter rear axle will be used on Satellite models with the 440 and 426 cubic inch engines (Fig.1).

The standard differential case used in both instances will be of the plate clutch type Sure-Grip Differential. In some instances where a higher numerical ratio gear is installed, a new differential case will have to be purchased and installed due to difference in ring gear mounting dimensions. On models equipped with the 440 cubic inch Power Pak engine, the standard gear set will be 3.31 ratio. Those models with the 426 cubic inch Hemi-Engine will be equipped with a 3.54 ratio gear set. Optional matched gear sets with ratios of 4.10, 4.56 and 4.88 will be available for dealer installation on models equipped with the 9-3/4 inch diameter axle assembly.

The rear axle is of the integral carrier-housing, hypoid gear type in which the centerline of the drive pinion is mounted below the centerline of the ring gear.

The rear axle housing is an iron casting with tubular legs pressed into and welded to the carrier to form a carrier and tube assembly. A removable stamped steel cover is bolted to the rear of the carrier to permit visual inspection of the differential without removing the complete rear axle from the vehicle.

A small metal tag is attached beneath one of the cover screws to identify the axle ratio. This tag is stamped with the number of teeth on the drive pinion and ring gear, and by dividing the larger number (ring gear teeth) by the smaller number (drive pinion) the axle ratio can be determined.

The drive pinion is supported by two preloaded taper roller bearings. The rear pinion bearing cone is a tight press-fit on the pinion stem. The front pinion bearing is a light-press fit to a close sliding fit on the pinion stem. The front and rear bearing cups are a press-fit against a shoulder recessed in the carrier. The drive pinion depth of mesh adjustment is con-

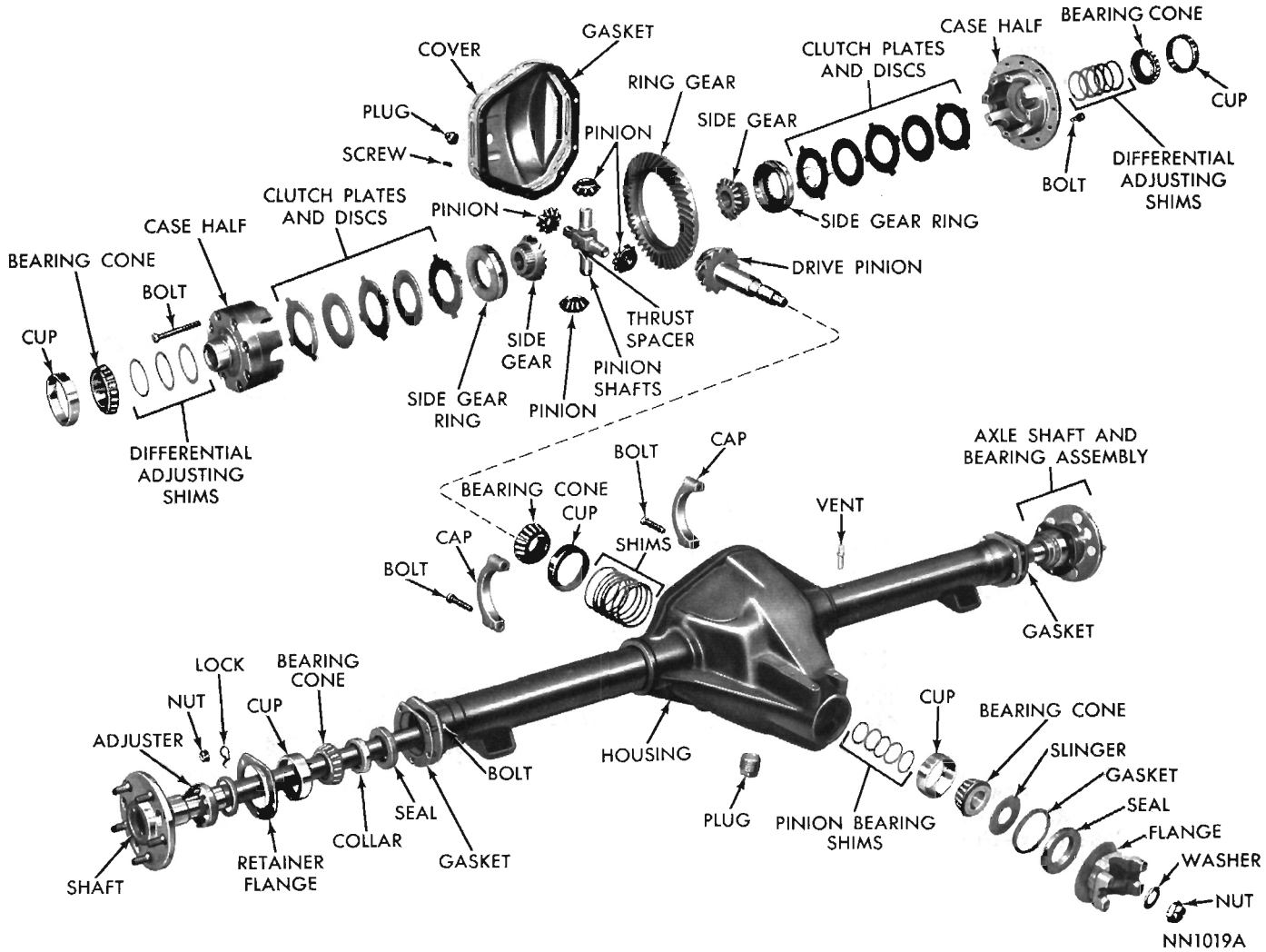

Fig. 1—9-1/4" and 9-3/4" Rear Axle Assembly

trolled by locating shims, which are installed between the rear pinion bearing cup and the carrier casting.

Drive pinion bearing preload is maintained by using different thicknesses of shim packs between the drive pinion bearing shoulder and front pinion bearing cone.

The differential case is supported by two taper roller bearing cones which are a press-fit on the differential case hubs. Shims installed between the bearing cone and shoulder of hub of differential case, perform three functions: They eliminate the differential case side play; they adjust and maintain the backlash between the ring gear and drive pinion; and establish a means of obtaining differential bearing preload.

The rear axle shafts are mounted on taper roller bearings which are located at the outer ends of the axle housing tubes. The bearings are pressed onto the shoulder of the shaft and held in place by a collar that has a very tight interference fit. The bearings are lubricated with Multi-Purpose Grease NLGI grade 2 E.P. Oil seals are pressed into the outer ends of the housing tubes to prevent oil leakage from the center section of the axle into the wheel bearings and onto the brake assembly. The outer retainer clamps the bearing and cup into the housing bore and also clamps the brake support plate to the studs of the housing tube. Axle shaft end play is adjusted by means of a threaded adjuster located in the right axle shaft bearing retainer. Axle shaft end play must be maintained at .008"-.018".

SERVICE PROCEDURES

CAUTION: When servicing car equipped with 9-1/4" and 9-3/4" axles, DO NOT use the engine to rotate axle components unless both wheels are clear. These axles can exert significant driving force with one wheel.

DIFFERENTIAL NOISE (CHATTER-MOAN)

It is suggested that before the axle assembly is disassembled for any type noise complaint, that the lubricant be changed. An improper lubricant can cause such noises as chatter and moan as well as scoring of the differential clutch plates and discs resulting in a possible failure of the unit.

(1) With lubricant of rear axle assembly at operating temperature raise car on hoist so rear wheels are free to turn.

(2) Loosen and remove drain plug and drain lubricant (9-3/4" axle). On 9-1/4" axle remove fill plug and using a suction gun remove as much of the old lubricant as possible.

(3) Fill to proper level with special Sure-Grip Lubricant Part Number 2585318 or equivalent. Reinstall fill plug and tighten.

(4) Start engine of vehicle and engage in gear and run on hoist with rear wheels free to turn at approximately 40 (MPH) for ten (10) minutes. This thoroughly circulates the lubricant and brings it to operating temperature.

(5) Stop vehicle and remove drain plug and drain out as much of the old lubricant as possible or fill plug and using a suction gun remove as much of the old lubricant as possible.

(6) Refill axle to proper level with new Sure-Grip Lubricant Part Number 2585318 or equivalent. Reinstall fill plug and tighten.

(7) Lower car on hoist and return to customer to drive and evaluate for approximately 100 miles to determine if lubricant corrects the noise condition.

If after driving vehicle approximately 100 miles and the differential noise is still evident, remove the axle assembly and service the differential with the necessary parts.

AXLE SHAFTS AND BEARINGS

CAUTION: It is absolutely necessary that anytime an axle assembly is serviced, and the axle shafts are loosened and removed, the axle shaft gaskets and inner axle shaft oil seals must be replaced.

The service procedures for the axle shafts and bearings are the same as that described under the 8-3/4" Rear Axle section of this group. The only exception being that of axle shaft end play which will be maintained within the tolerances of .008-.012 inch.

Whenever the rear axle shafts have been removed from the axle assembly, always determine that the thrust spacers have not fallen out of the pinion shaft. The spacers may be observed through the axle shaft opening of the axle housing. This may be done with the aid of a small flashlight. If the spacers are out of place, it will be necessary to disassemble the differential to reinstall them.

Install axle shaft inner oil seal using Tool C-4026 (9-3/4" Axle) and Tool C-839 (9-1/4" Axle). The above tools position the seal the proper dimension from the axle shaft bearing shoulder in the axle housing in order that seal will definitely contact the machined sealing surface of the axle shaft.

CAUTION: Under no circumstances should axle shaft collars or bearings be removed using a torch. The use of a torch in the removal of the axle shaft collars or bearings is an unsafe practice, because heat is fed into the axle shaft bearing journal and, thereby weakens this area.

REAR AXLE ASSEMBLY

Removal

(1) Raise rear of vehicle until rear wheels clear floor. Support body at front of rear springs.

(2) Block brake pedal in the up position using a wooden block.

(3) Remove rear wheels.

(4) Disconnect hydraulic brake lines at wheel cylinders and cap fittings to prevent loss of brake fluid.

(5) Disconnect parking brake cables.

To maintain proper drive line balance when reassembling, make scribe marks on the propeller shaft universal joint and the pinion flange before removal.

(6) Disconnect propeller shaft at differential pinion flange and secure in an upright position to prevent damage to front universal joint.

(7) Remove shock absorbers from spring plate studs and loosen rear spring "U" bolts nuts and remove "U" bolts.

(8) Remove axle assembly from vehicle.

DIFFERENTIAL

Removal and Disassembly

(1) Position carrier and tube assembly in a suitable holding device; such as the jaws of a vise with the carrier cover facing upward. Thoroughly clean the outer area of carrier and tubes with a suitable cleaning solvent and blow dry with compressed air.

(2) Loosen and remove cover screws and remove carrier cover. Tilt assembly and drain lubricant into a container.

(3) Using a suitable cleaning solvent wash and clean differential, bearings, ring gear and pinion and internal surfaces and blow dry with compressed air.

(4) In preparing to measure drive gear back face runout (provided no side play was found) mount a dial indicator Tool C-3339 on pilot stud (Fig. 2) and load the indicator stem slightly when plunger is at right angles to back face of drive gear.

(5) Measure drive gear back face runout by rotating drive gear several complete revolutions and reading dial indicator. Mark drive gear and differential case at point of maximum runout. The marking of differential case will be very helpful later in checking differential case runout. Total indicator readings in excess of .006 inch might indicate possible loose drive gear or damaged differential case. A test for differential case runout will be described later.

(6) Check the clearance between the differential bearing cap and bearing cup by trying to insert a piece of .003 inch feeler stock between them. A .003 inch feeler should not enter between the bearing cap and cup. A clearance of more than .003 inch could be caused by bearing cup having turned in carrier, causing excessive wear.

(7) Note identifying letters stamped on bearing caps and face of carrier housing seal surface (Fig. 3). Letters stamped on left side are in horizontal position while right side are in vertical position. Always match identifying letters for proper reassembly.

(8) Loosen and remove the differential bearing caps and locate spreader Tool W-129 with tool dowel pins seated in locating holes of axle housing. Turn tool screw finger tight at this time.

(9) Install pilot stud on left side of axle housing. Attach dial indicator and load indicator stem slightly against opposite side of axle housing (Fig. 4).

(10) Tighten spreader tool nut sufficiently to obtain .015 inch movement of dial indicator to permit removal of differential case and ring gear assembly.

DO NOT SPREAD OVER .020 INCH AS IT WILL RESULT IN PERMANENT DAMAGE TO CARRIER CASTING.

(11) Remove dial indicator and remove differential case and ring gear assembly from axle housing. A light prying action with a screwdriver or pinch bar

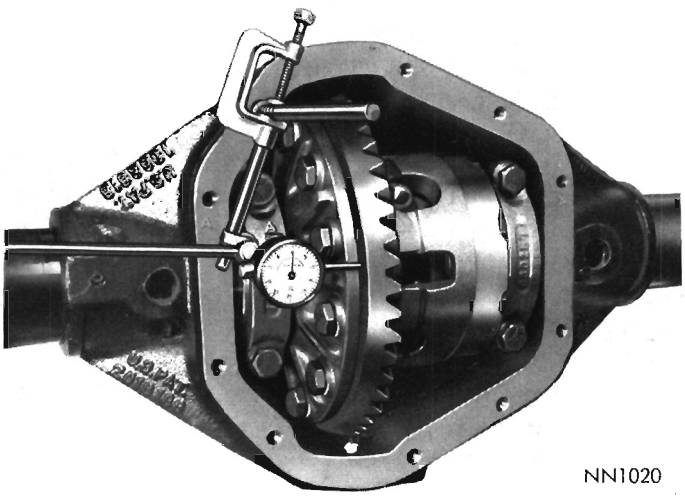

NN1020

Fig. 2—Measuring Drive Gear Runout

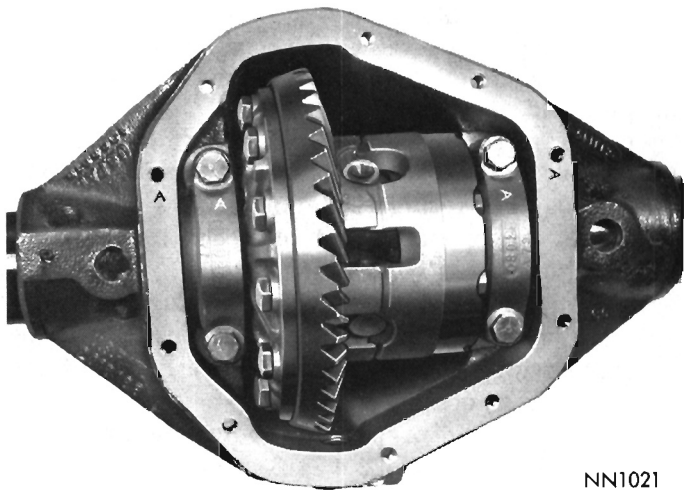

NN1021

Fig. 3—Bearing Cap Identification

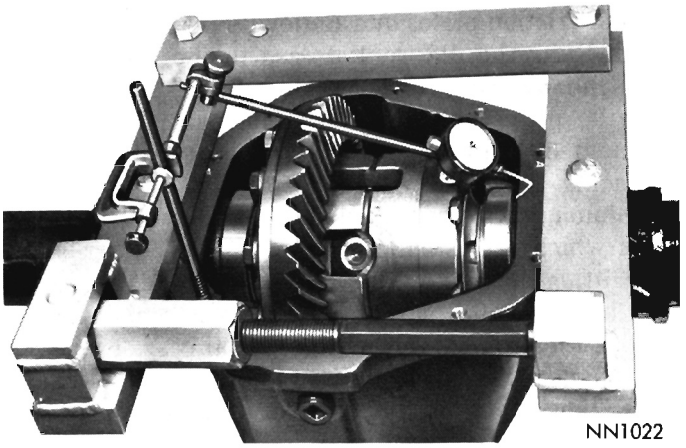

Fig. 4—Spreading Rear Axle Housing

will loosen assembly for easy removal (Fig. 5). Pry up differential case and ring gear as straight up as possible using leverage against differential case and carrier to prevent damage. Keep respective bearing cups with bearing cones, if they are not worn or damaged and are to be reassembled.

(12) Place the differential case between the soft jaws of a vise and remove the drive gear screws and discard. Using a fiber mallet, tap the drive gear loose from the differential case pilot and remove.

(13) If the drive gear runout exceeded .006 inch in step 5 differential case flange runout should be re-measured. Install differential case with respective bearing cups into axle housing. Loosen nut of spreader tool and remove. Install bearing caps and tighten snugly. Mount dial indicator in contact with flange face of differential case (Fig. 6) and measure runout as described in Step 5. Total allowable runout should not exceed .003 inch. It is often possible to reduce excessive runout by positioning drive gear 180 degrees from point of maximum runout when reassembling ring gear on differential case.

(14) Position carrier and tube assembly in vise with nose of carrier in the up position. Remove drive

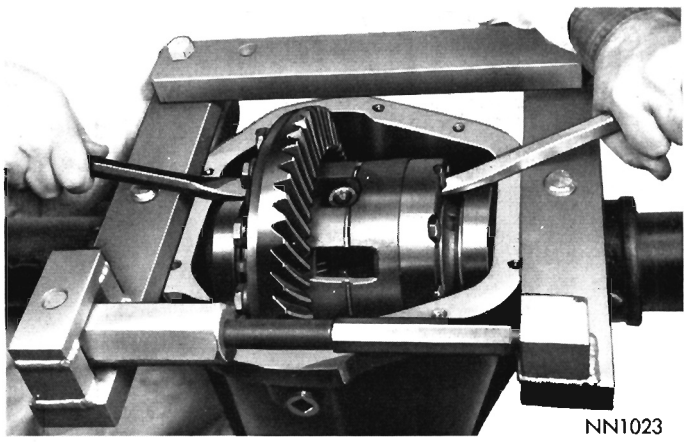

Fig. 5—Removing Differential and Drive Gear Assembly

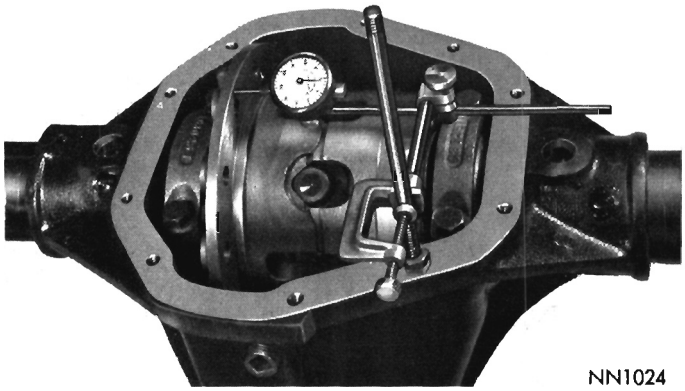

Fig. 6—Measuring Differential Case Drive Gear Mounting Flange Face Runout

pinion nut and washer. Using Tool C-452 and holding Tool C-3281, remove drive pinion flange.

(15) Using Tool C-748, remove drive pinion oil seal. Remove slinger, gasket, front pinion bearing cone and preload shim pack. Record the thickness of the shims in case they should be lost.

(16) Position the carrier and tube assembly on an arbor press, then press out the drive pinion stem and rear bearing cone assembly.

(17) With the aid of a brass drift and hammer, drive out the front and rear pinion bearing cups from housing. Remove the shim from behind the rear bearing cup and record the thickness of shim pack.

(18) Remove rear bearing cone from drive pinion stem using Tool DD-914C or Tool C-293 and adapters No. 37 (9-3/4" Axle) or adapters No. 17 (9-1/4" Axle).

(19) Remove differential bearing cones from differential case hubs using Tool DD-914C or Tool C-293 and adapters No. 62 (9-3/4" Axle or adapters No. 18 (9-1/4" Axle). (Fig. 7). Care must be taken to insure



Fig. 7—Removing Differential Bearings

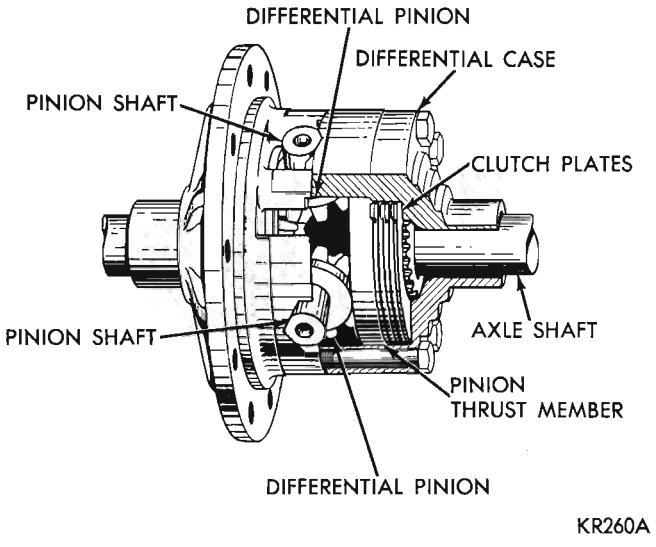

Fig. 8—Sure-Grip Differential (Schematic)

that bearing remover adapters are located so as not to pull on bearing cage.

(20) Remove the shims located behind each bearing and record thickness to aid in reassembly.

DIFFERENTIAL CASE

The sure-grip differential (Figs. 8, 9 and 10) is similar to the conventional differential except for the addition of friction plates and Belleville plates and discs for clutching the differential case to the differential gears and a means for engaging these plates. The Belleville plates and discs accomplish a positive engagement of the clutch discs and plates at all times by placing a preload on the plates and discs. It has four pinion gears, positioned in the case by two pinion shafts which are at right angles to each other and loose fitting at their inter-section. Both ends of each shaft have two flat surfaces, or ramps, which mate with identical ramps in the differential case. There is additional clearance in the case to permit a slight peripheral movement of the ends of the pinion shafts within the case.

Disassembly

(1) Remove axle drive gear. Measure runout of the drive gear mounting flange. Replace both case halves if runout exceeds .003 inch.

(2) Before disassembling case halves, place scribe marks on each half to aid in aligning the case when reassembling (Fig. 11). Remove case cap attaching bolts and remove case cap (Fig. 12). Remove clutch plates (Fig. 13).

(3) Remove side gear retainer (Fig. 14), and side gear (Fig. 15).

(4) Remove pinion shafts with pinion gears (Fig. 16).

(5) Remove remaining side gear (Fig. 17), side gear

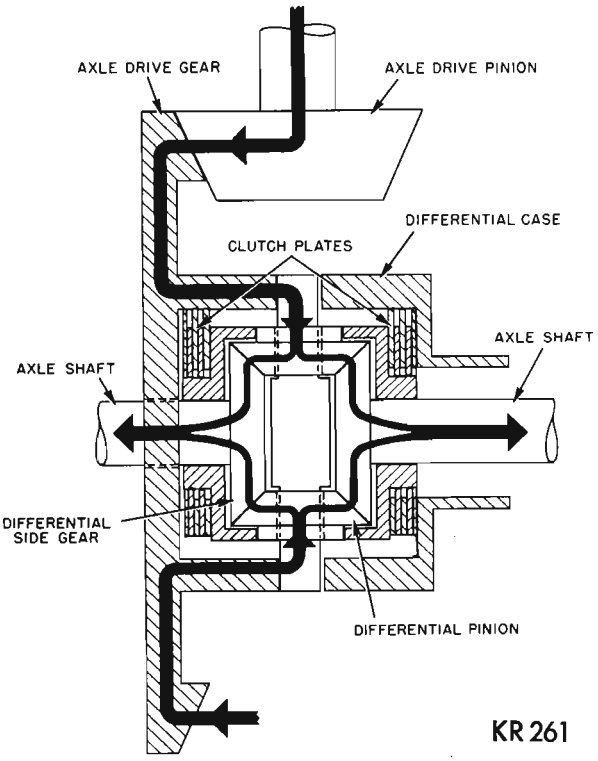

Fig. 9—Power Flow Axle Shafts Turning at Same Speed

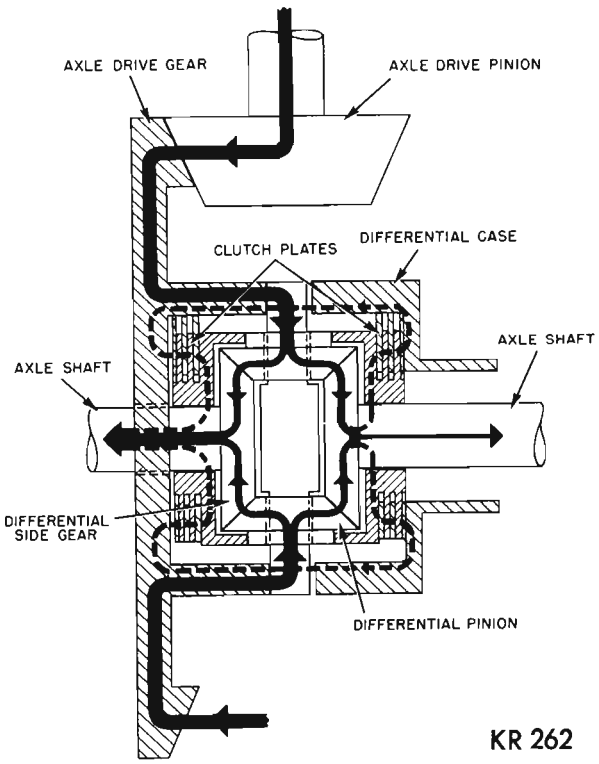

Fig. 10—Power Flow Axle Shafts Turning at Different Speeds

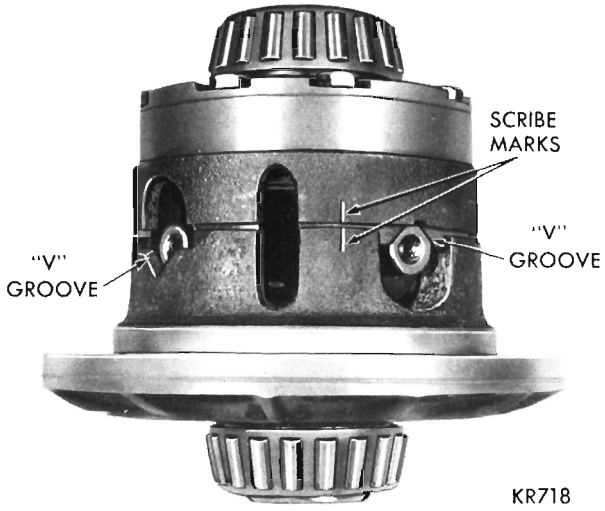

Fig. 11—Case Halves Scribed for Proper Reassembly

retainer (Fig. 18) and clutch plate (Fig. 19).

CLEANING AND INSPECTION

(1) Wash and clean all parts in a suitable cleaning solvent and with the exception of bearing cones, dry with compressed air. To clean axle housing tubes, insert a stiff wire into tube, attach a clean cloth to wire at center section and withdraw from center outward.

(2) All machined contact surfaces in the axle housing and differential bearing caps should be smooth and free of any raised edges. Front and rear pinion bearing cup bore machine surfaces should be smooth. Raised metal on shoulders of bores incurred in removal of cups should be flattened by use of a flat nosed punch.

(3) Axle shaft oil seal bores at both ends of housing should be smooth and free of rust and corrosion. This

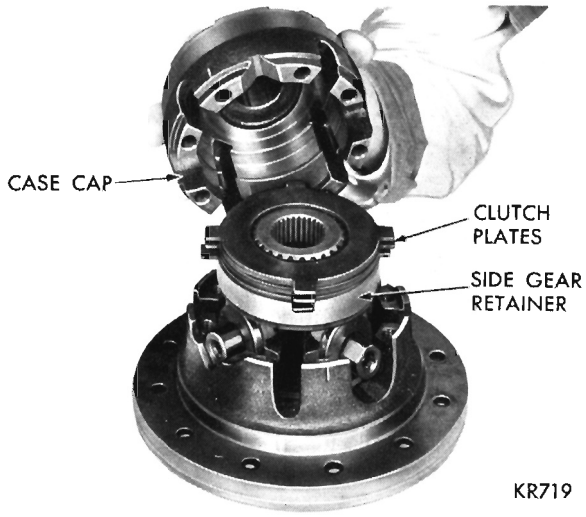

Fig. 12—Removing or Installing Differential Case Cap

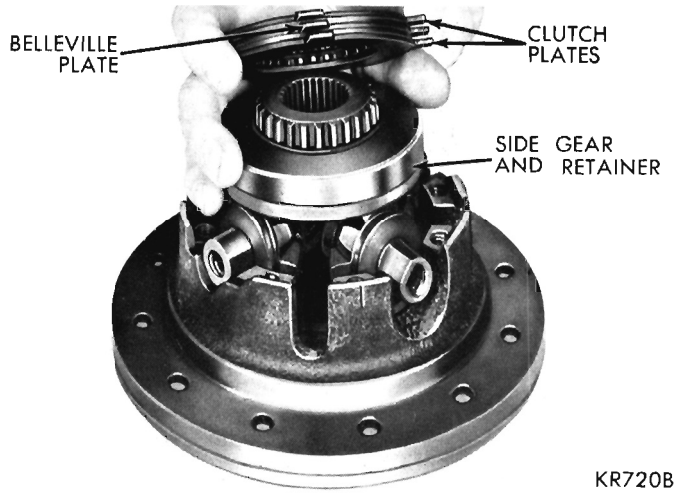

Fig. 13—Removing or Installing Clutch Plates (Cap Side)

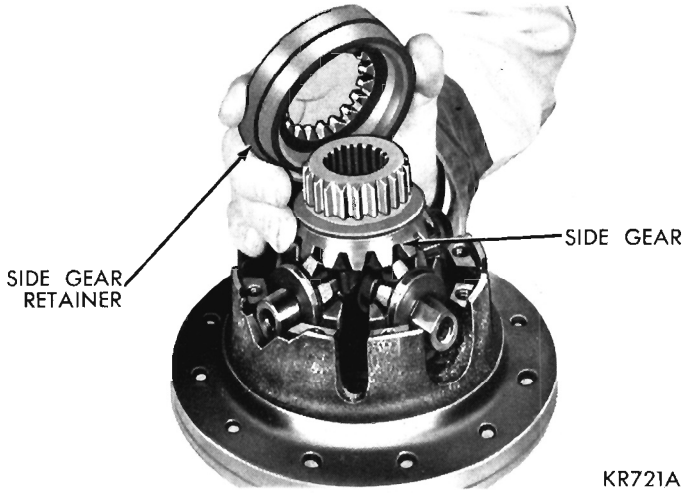

Fig. 14—Removing or Installing Side Gear Retainer (Cap Side)

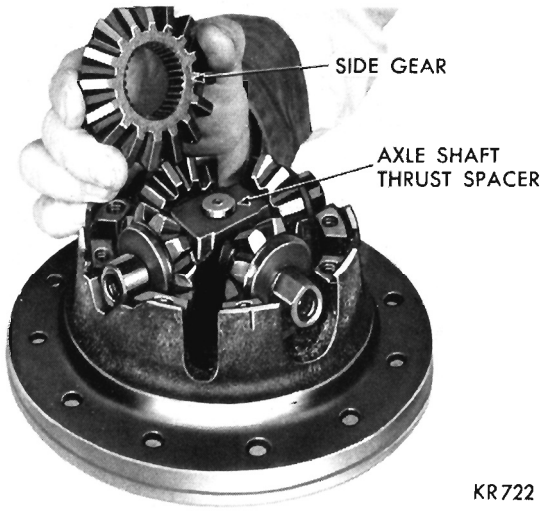

Fig. 15—Removing or Installing Side Gear (Cap Side)

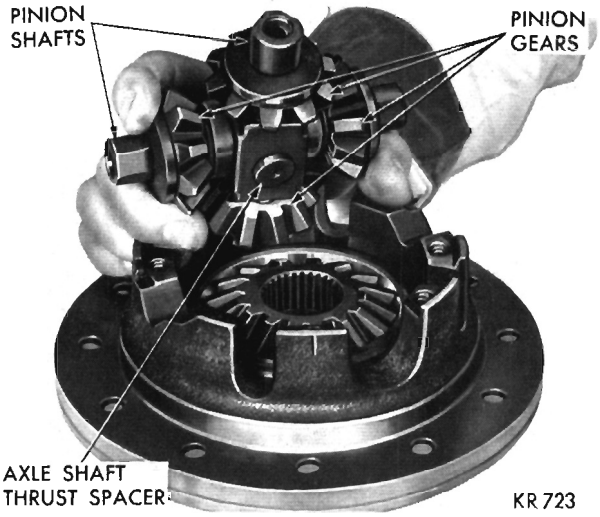

Fig. 16—Removing or Installing Pinion Shafts and Gears

also applies to brake support plate and housing flange face surface.

(4) Axle shaft bearings should be washed and cleaned and inspected for any pitting, spalling or imperfections in surface of bearing cup. If bearings are found to be unfit for further use they **must be replaced.** See "Axle Shaft Assembly Procedure."

(5) Axle shaft splines should be smooth and straight and free of excessive wear. The axle shaft oil seal journal should be smooth and free of nicks, scratches or corrosion. To remove any imperfections, polish the area with #600 crocus cloth (without reducing diameter of axle shaft oil seal journal).

(6) Differential bearings and front and rear pinion bearing cone and cup assemblies should have a smooth appearance with no broken or dented surfaces on rollers or roller contact surfaces. The bearing roller retainer cages must not be distorted or cracked. **When replacing bearings, always replace the cup and cone in a set only.**

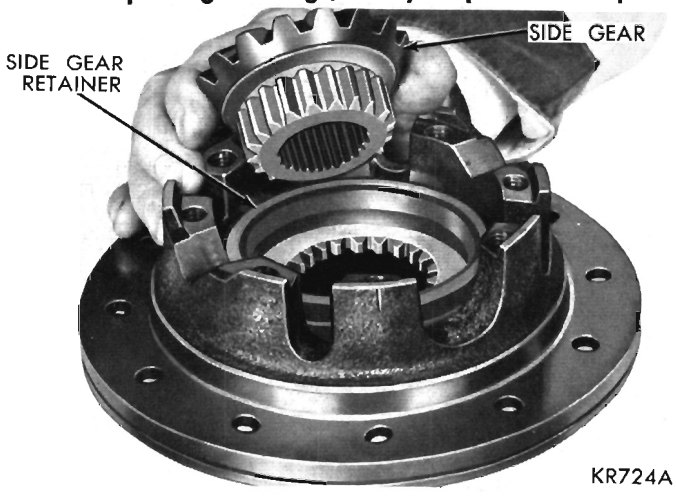

Fig. 17—Removing or Installing Side Gear from Differential Case

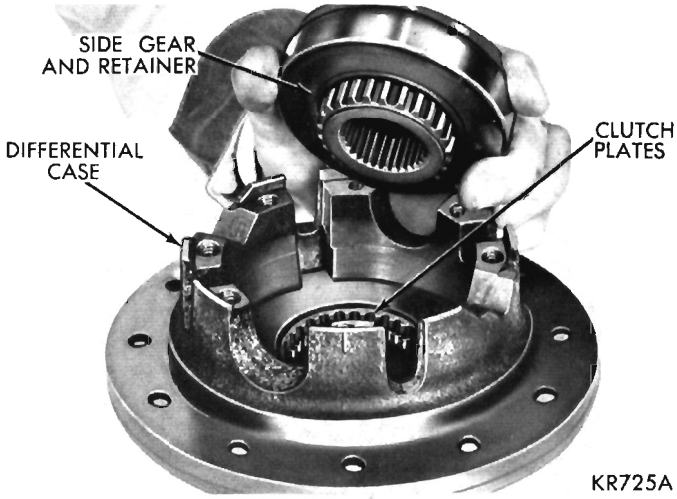

Fig. 18—Removing or Installing Side Gear Retainer

(7) Inspect drive gear and pinion for worn or chipped teeth or damaged attaching bolt threads. If replacement is necessary, replace both the drive gear and drive pinion as they are available in matched sets only.

(8) Inspect universal joint flange for cracks, worn splines, pitted, rough or corroded oil seal contacting surface. Repair or replace universal joint flange as necessary.

(9) Inspect drive pinion bearing shim pack for broken, damaged or distorted shims. Replace, if necessary, during establishment of pinion bearing preload.

(10) Clean all differential parts and inspect parts for wear, nicks and burrs. The inner and outer flat clutch plates and outer flat clutch disc should be replaced if they are worn or distorted. If either case half is worn, it will be necessary to replace both halves.

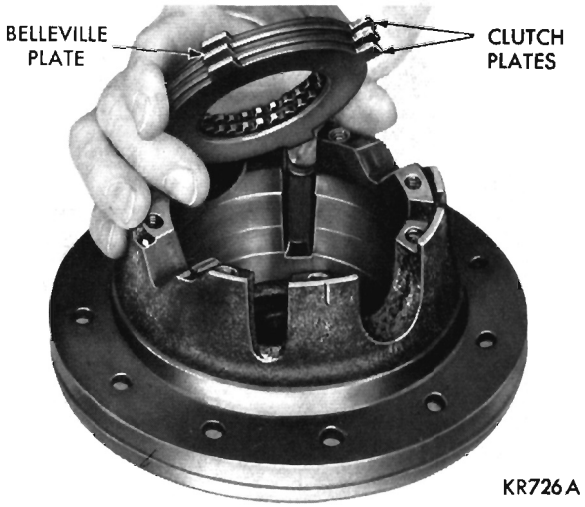

Fig. 19—Removing or Installing Clutch Plates and Discs

ASSEMBLING THE DIFFERENTIAL

(1) Position clutch plates and discs in their proper location in each half of the case (Fig. 20).

(2) Place side gears in their retainers. Insert splines of retainers through the splines of clutch discs.

(3) Place aligning pin through one axle shaft thrust spacer. Assemble pinion shafts on aligning pin.

(4) Place pinion gears on shafts and install assembly in drive gear half of case.

(5) Slide cap half of case over the edge of bench far enough to insert one finger up through the assembly to hold it together. Place the assembly on drive-gear half, matching scribe marks.

(6) Make sure markings on each differential case half coincide. Install the differential case bolts and turn in a few threads.

(7) With shafts installed, center the cross shafts between the two ramp surfaces in differential case. Tighten differential case bolts evenly by alternately turning opposite bolts until all are tightened to 45 foot-pounds. To keep splines of the side gear and clutch plates in exact alignment during the tightening procedure, move axle shafts back and forth as bolts are being tightened. After assembly, slight misalignments of the splines can be corrected by moving axle shafts back and forth until free. Remove axle shafts.

INSTALLATION—DIFFERENTIAL CASE AND DRIVE GEAR

The contacting surfaces of the drive gear and differential case flange must be clean and free of all burrs. Dress down surfaces with a file as needed.

(1) Position drive gear on differential case pilot, aligning threaded holes of drive gear with those in differential case flange.

(2) Insert drive gear screws through case flange and into drive gear. After all cap screws are properly started, tap drive gear against differential case flange

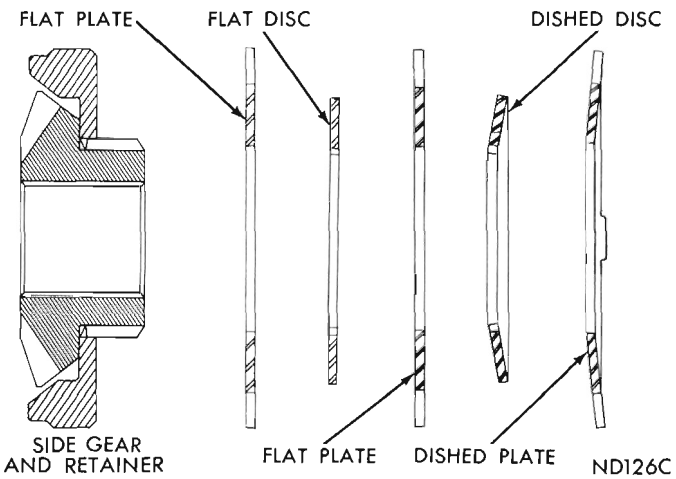

Fig. 20—Arrangement of Plates and Discs 9-1/4" and 9-3/4" Differential



Fig. 21—Installing Differential Bearing Cones

with a non-metallic mallet.

(3) Clamp unit between brass jaws of a vise and alternately tighten each cap screw to 55-75 foot-pounds (9-1/4" axle), 100-120 foot-pounds (9-3/4" axle).

(4) Position each differential bearing cone on hub of differential case (without shims), small end away from drive gear, using Tool C-4025 (9-3/4 Axle) or Tool C-4028 (9-1/4" Axle) (Fig. 21). An arbor press may be used in conjunction with installing Tool.

CAUTION: Never exert pressure against the bearing cage, since this would damage the bearing and make it unfit for further use.

(5) Position differential bearing cups on their respective cones and insert differential case in carrier. Install bearing caps in their correct positions and tighten bearing cap bolts finger tight.

(6) Install dial indicator fixture with indicator pointer contacting back face of drive gear.

(7) Insert a screwdriver blade between bearing cup and housing and pry case assembly as far as possible to one side of housing (Fig. 22). Set dial indicator at zero. Using screwdriver, pry case to opposite side of housing and record the reading.

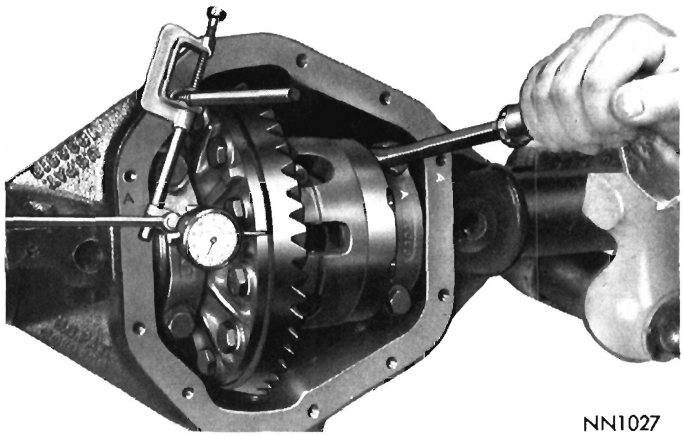

Fig. 22—Determining Shims to Obtain "0" End Clearance

This reading indicates the amount of shims needed to take up the clearance between the differential bearing cups and the case. The shim pack thickness to be placed on bearing hub between bearing cone and differential case will be calculated later in the procedure after installation of drive pinion and depth of mesh setting.

(8) Remove dial indicator, loosen bearing cap bolts and remove bearing caps. Remove differential assembly from housing.

DRIVE PINION DEPTH OF MESH SETTING (Using Pinion Depth Gauge Tool DD-1244)

Note the figures etched on the head of the drive pinion and observe (Fig. 23). One figure is found on both the drive pinion and ring gear and indicates a matched gear set. Directly opposite this figure will be one with a + or — before it, or if not a + or —, the figure will be 0. This number must be positively identified before continuing with the assembly procedure. Midway between the two sets of figures described above are numbers and letters. These numbers and letters are etched for manufacturing purposes only, but as one of these numbers may be 0, it might be confused with the number needed for assembly procedure. A rule to follow would be to first examine the shaft end for a + or — number. If a + or — number is not etched on the pinion head, then the number will be 0.

(1) Install rear drive pinion bearing cup and shim pack in carrier. The starting shim pack to be placed between the rear cup and carrier can be determined from the shims removed and the etched marking on the pinion. The + or — figure indicates the variation from the nominal distance between the front of the pinion and the center line of the carrier. For example, if a pinion marked +2 was originally installed with a shim pack .035 inch and the new pinion is marked —1, the shim pack should be increased .003 inch to bring the new pinion to its correct position and the new shim pack would be .038 inch. This will give an approximate setting of the pinion. A pinion depth gauge should be used for final setting of the pinion, see steps 6 through 14. Shims are available in .003, .005 and .010 inch thickness.

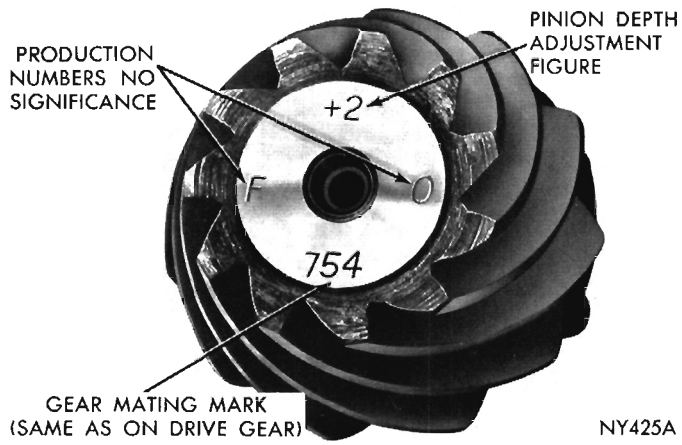

Fig. 23—Drive Pinion Markings

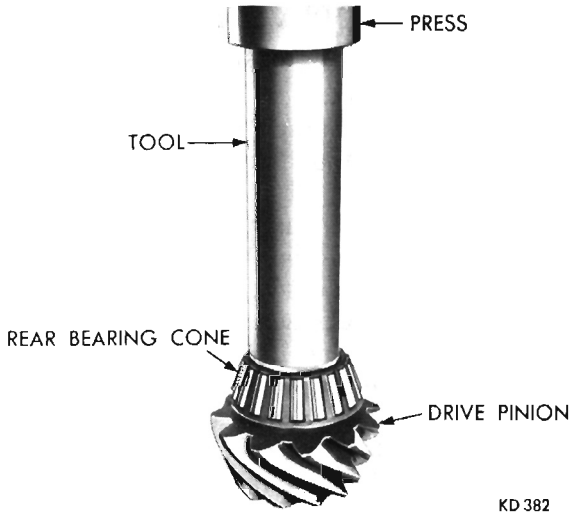

Fig. 24—Installing Rear Pinion Bearing Cone

(2) Install front pinion bearing cup in carrier.

(3) Lubricate rear drive pinion bearing cone with Sure-Grip Lubricant, Part Number 2585318, or equivalent, and install bearing cone on pinion stem with Tool DD-955 (9-3/4" Axle) or Tool C-4040 (9-1/4" Axle) (Fig. 24).

(4) Position drive pinion and bearing assembly in carrier and install front pinion bearing cone on pinion stem. Do not install preload shims behind front pinion bearing at this time.

(5) Install universal joint pinion flange followed by washer and nut. Tighten nut just enough to obtain 10-30 inch-pounds of preload. Rotate drive pinion while tightening to seat bearing rollers.

(6) The pinion depth gauge Tool DD-1244 (Fig. 25),

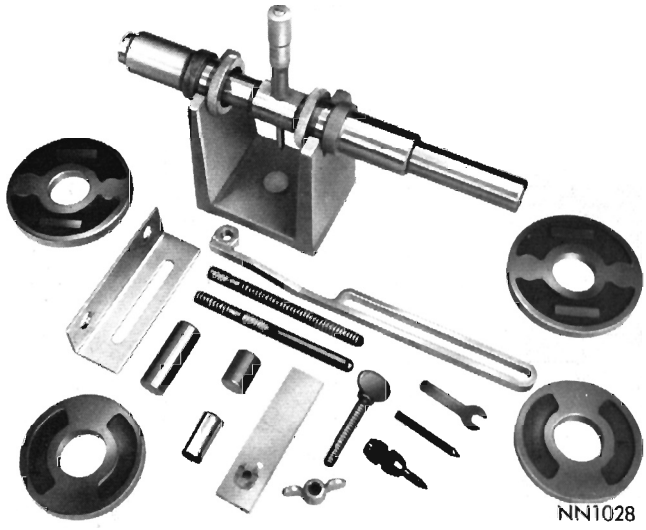

Fig. 25—Pinion Depth Gauge Tool DD-1244

is a direct reading precision micrometer, mounted in an arbor and is calibrated to show the distance from the end of the anvil to the centerline of the gauge set. To check the accuracy of the gauge, install the micrometer and arbor in the master gauge. Install the checking block and read the micrometer, it should be accurate within less than .0005 inch (Fig. 26).

(7) Select the proper adapters from the gauge set that fits the differential bearing cup bores. Install the adapters on the arbor and position in carrier housing. Install bearing caps and tighten cap bolts up snug.

(8) Install the step plate clamp assembly on the carrier housing. Position step plate over pinion and tighten step plate screw against step plate. Make sure the four step plate feet are squarely positioned on the pinion.

(9) Adjust the micrometer so it is directly over and at a 90 degree angle to the step plate. Screw the micrometer down until the anvil contacts the top of the step plate (Fig. 27). Read the micrometer and make a note of the reading. The step plate measures .400 inch thick, therefore, add the .400 inch step plate thickness to the micrometer reading.

(10) Figure 28 shows the nominal pinion setting dimensions for 0 (zero) marked pinion. Pinions with a + or — marking require a different pinion setting. For example, if a pinion marked +2 is being installed in a 9-3/4″ axle, add the +2 to pinion setting dimensions 3.125 which will be the corrected dimension of 3.127. The 9-1/4″ axle 2.688 dimension will be corrected to 2.690.

(11) If pinion setting is within —.001 inch to +.003 inch, the pinion position can be assumed to be correct. If the setting is outside these limits, it should be corrected by adding or removing the proper thickness shim behind the rear pinion bearing cup.

(12) Remove the drive pinion depth gauge and drive pinion.

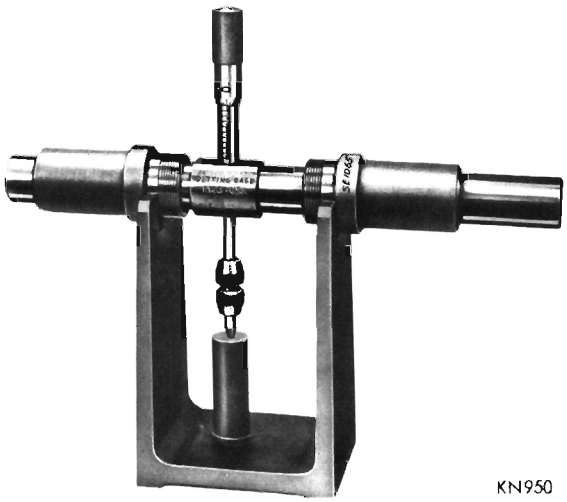

Fig. 26—Checking Gauge in Master Gauge Assembly

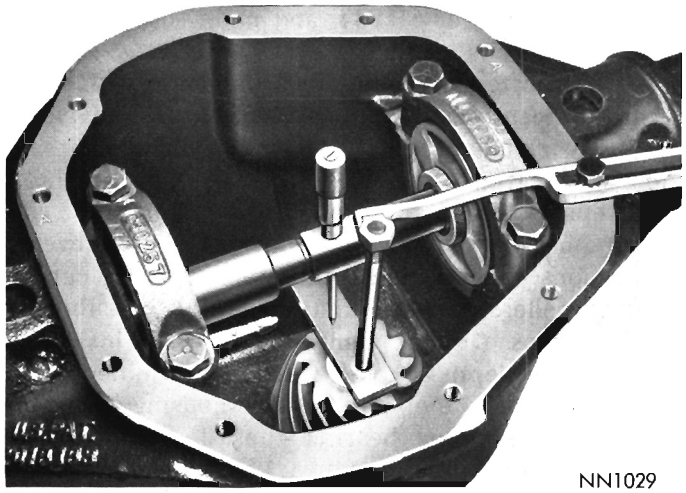

Fig. 27—Determining Pinion Depth Setting

(13) If shim adjustment is necessary, remove drive pinion rear bearing cup and add or remove shims as determined in preceding Step 9. Measure each shim separately with a micrometer.

(14) Reinstall drive pinion rear bering cup and shims and recheck pinion depth measurement, described previously.

DRIVE PINION DEPTH OF MESH (Using Tool C-758-D4)

Rear axle setting gauge Tool C-758-D4 is used to install drive pinion bearing cups as well as to determine pinion depth of mesh.

(1) Start both drive pinion bearing cups into axle housing.

(2) Assembly Tool C-758-D4 by positioning spacer SP-5184 on main screw of tool (9-3/4″ axle), or spacer SP-5186 (9-1/4″ axle). Position rear pinion bearing cone on tool screw and insert into axle housing.

(3) Position front pinion bearing cone over main screw of tool followed by compression sleeve SP-535,

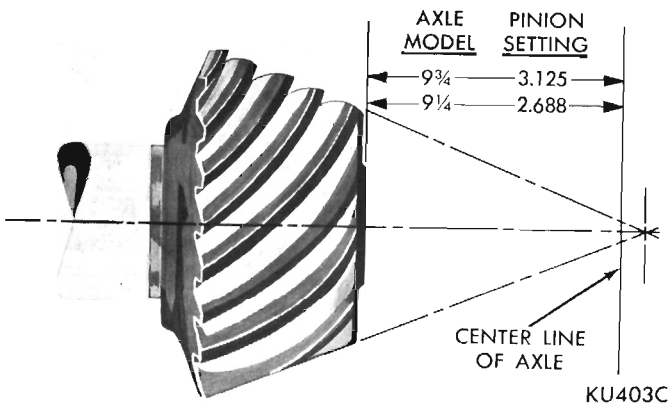

Fig. 28—Pinion Setting Dimensions

centralizing washer SP-534, and main screw nut SP-533.

(4) Lubricate drive pinion bearing cones with Sure-Grip Lubricant, Part Number 2585318, or equivalent.

(5) To install pinion bearing cups, hold compression sleeve from turning with Tool C-3281, tighten nut, thereby drawing pinion bearing cups into axle housing bearing cup bores. Permit tool to turn several revolutions during tightening operation to permit bearing rollers to align and prevent brinnelling of bearing cups. **Do not remove tool after installing cups. Pinion depth of mesh will be determined next.**

(6) With main tool left in axle housing after installing drive pinion bearing cups, loosen tool nut and re-tighten nut to produce 10-30 inch-pounds of preload. Rotate while tightening to align bearing rollers.

(7) Install gauge block SP-528 on main tool and tighten screw with an Allen wrench securely.

(8) Position cross bore arbor SP-5183 (9-3/4" axle), or SP-5185 (9-1/4" axle) in axle housing differential bearing seats. Center the arbor so that an approximate equal distance is maintained at both ends. Correctly position differential bearing caps and insert bolts and tighten to 10 foot-pounds.

(9) Using a feeler gauge select the proper thickness of shims that will snugly fit between arbor and gauge block. This fit must be snug but not too tight (similar to the pull of a feeler gauge). This measurement is then used in determining the correct thickness shim pack for installation behind the rear pinion bearing cup and carrier casting (Fig. 29).

(10) To select a shim pack for installation, read the markings on the end of pinion head (—0, —1, —2, +1, +2, etc.). When marking is —(minus), add that amount to the thickness of shim pack selected in step (9). When the marking is +(plus), subtract that amount. Treat other pinion markings in a similar manner. Shims are available in .003, .005, and .010 inch thickness.

(11) Remove the tool arbor and tool from axle housing.

(12) Using a brass drift or soft punch and hammer, remove rear pinion bearing cup from casting.

(13) Position the correct shim pack in axle housing cup bore and install rear bearing cup as described previously in steps (1 thru 5). When cup is properly seated, remove tool and pinion bearing cones.

(14) Lubricate rear drive pinion bearing cone with Sure-Grip Lubricant, Part Number 2585318 or equivalent and install bearing cone on pinion stem using Tool DD-955 (9-3/4" Axle) or Tool C-4040 (9-1/4" Axle). An arbor press may be used in conjunction with tool (Fig. 24).

(15) Install drive pinion and bearing assembly in carrier and install the original front pinion bearing shim pack followed by the bearing cone. **Do not install oil seal at this time.**

(16) Install universal joint flange, washer and nut. Tighten nut 250-270 foot-pounds (9-3/4" axle) and 200-220 foot-pounds (9-1/4" axle). Rotate pinion several complete revolutions to seat bearing rollers.

(17) Using an inch-pound torque wrench C-685, measure pinion bearing preload by rotating pinion with handle of wrench floating (Fig. 30). Take reading while handle is moving through several complete revolutions. Accurate reading can be made only with nose of axle in upright position. Correct preload is 10-20 inch-pounds. **Add** shim to decrease preload and **Subtract** shims to increase preload. Shims are available in the following thicknesses: .003, .005, .010, and .030 inch.

(18) After the correct pinion bearing preload has been established, remove the universal joint flange, nut and washer.

(19) Install oil slinger and gasket. Using pinion

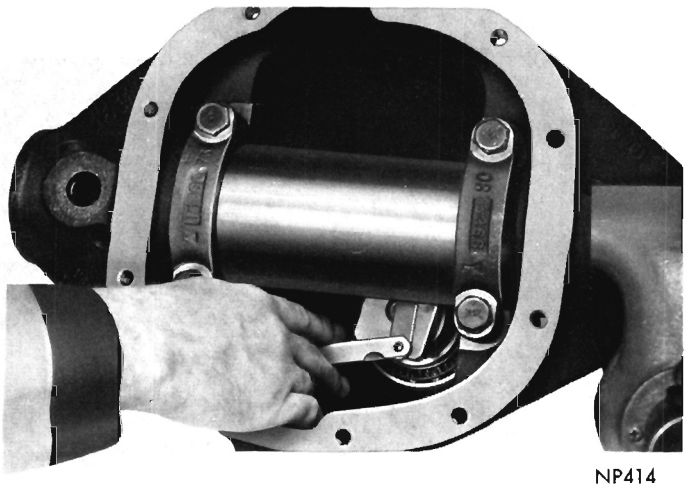

NP414

Fig. 29—Determining Shim Pack Thickness for Drive Pinion Depth of Mesh

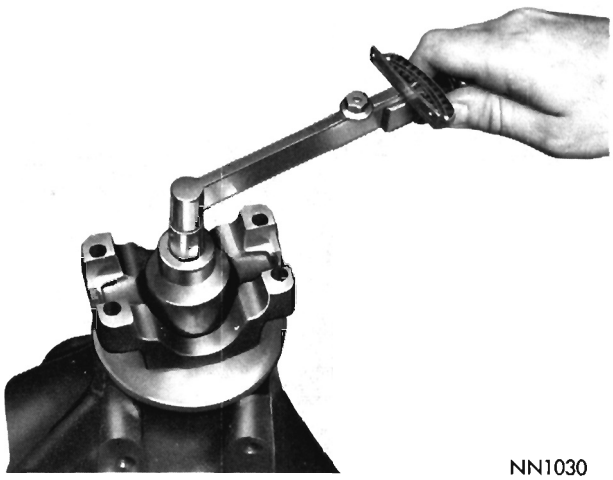

NN1030

Fig. 30—Checking Pinion Bearing Preload

seal installing Tool C-3719, install drive pinion oil seal.

(20) Install universal joint flange washer and nut. Tighten nut 250-270 foot-pounds (9-3/4" axle) or 200-220 foot-pounds (9-1/4" axle).

PINION BEARING PRELOAD

(1) Remove universal joint flange, washer, nut and front pinion bearing cone.

(2) Install the original front pinion bearing shim pack followed by the bearing cone. Do not install oil seal at this time.

(3) Install universal joint flange washer and nut. Tighten nut 250-270 foot-pounds (9-3/4" axle) and 200-220 foot-pounds (9-1/4" axle). Rotate pinion several complete revolutions to align and seat bearing rollers.

(4) Using an inch-pound torque wrench C-685, measure pinion bearing preload by rotating pinion with handle of wrench floating (Fig. 30). Take reading while handle is moving through several complete revolutions. Accurate reading can be made only with nose of axle in upright position. Correct preload is 10-20 inch-pounds. **Add** shims to decrease preload and **subtract** shims to increase preload. Shims are available in the following thicknesses: .003, .005, .010, and .030 inch.

(5) After the correct bearing preload has been established, the pinion depth setting should be rechecked.

(6) Remove universal joint flange nut and washer.

(7) Install oil slinger and gasket. Using Tool C-4024, install drive pinion oil seal.

(8) Install universal joint flange, washer and nut. Using Tool C-3281 to hold flange, tighten pinion nut 250-270 foot-pounds (9-3/4" axle) and 200-220 foot-pounds (9-1/4" axle). Recheck pinion bearing preload.

DIFFERENTIAL BEARING PRELOAD AND DRIVE GEAR AND PINION BACKLASH

(1) With drive pinion and bearings installed and bearing preload set, install differential case and ring gear assembly with their respective bearing cups. Install bearing caps in their positions, align identification marks and tighten cap bolts finger tight.

Refer to the measurement taken previously in step (7) of "Installation-Differential Case and Drive Gear".

This reading taken before the drive pinion was installed represents the total clearance between the differential bearing cups and the carrier casting. Perform the following steps to determine the thicknesses of shims required behind each bearing cone to take up the clearance and establish the correct bearing preload and backlash.

(2) Install a dial indicator and position the contact point against back face of ring gear. Move the differential and ring gear assembly tight against the drive pinion, set the dial indicator on 0. Move the differential and ring gear assembly in the opposite direction as far away from pinion as possible and note the reading on dial indicator.

This reading represents the thickness of shim pack necessary to take up the clearance between the bearing cup and the case on the ring gear side of the differential assembly. Subtract this reading from the previously recorded total reading to obtain the amount of shims necessary to take up the clearance between the bearing cup and the case at the pinion side of the differential.

(3) Remove differential and ring gear assembly from carrier.

(4) Remove differential bearing cones. Install the correct thickness shim pack as determined in step 2 between bearing cone and differential case hub shoulder using Tool C-4025 (9-3/4" Axle) or Tool C-4028 (9-1/4" Axle). Add an additional .015 inch shims to the drive gear side of differential and install the differential bearing cones. This additional .015 inch shim pack provides the correct bearing preload and backlash.

(5) Position spreader Tool W-129 in locating holes of carrier and tighten screw finger tight. Install dial indicator and spread carrier .015 to .020 inch. Do not exceed this limit to permit placing of differential and ring gear assembly in carrier.

(6) Install the bearing caps in their respective positions as indicated by identification marks on caps and carrier. Remove the spreader tool. Coat the bearing cap bolt threads with sealing compound and install and tighten bolts snugly.

(7) Tap the drive gear lightly with a rawhide hammer to properly seat the differential bearing and cups. **Care must be taken in this operation to prevent nicking the teeth of ring gear or drive pinion as they are meshed together.** Tighten the bearing cap bolts to 70-90 foot-pounds.

(8) Attach a dial indicator to carrier and with indicator contact point contacting ring gear tooth (Fig. 31), measure the backlash between the ring gear and drive pinion.

(9) Check backlash at four equally spaced points around circumference of ring gear. Backlash must be held between .004-.009 inch and cannot vary more than .002 inch between the four positions checked.

If backlash does not fall within these specifications, change shim pack thickness on both differential bearing hubs to maintain proper bearing preload and backlash.

GEAR TOOTH CONTACT PATTERN

The gear tooth contact pattern will disclose whether

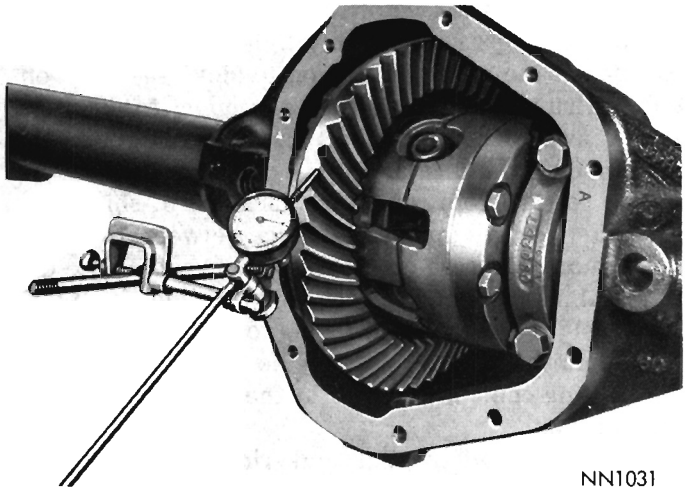

Fig. 31—Checking Backlash Between Drive Gear and Pinion

the correct rear pinion bearing mounting shim has been installed and the drive gear backlash set properly. Backlash between the drive gear and pinion must be maintained within the specified limits until correct tooth contact pattern is obtained.

(1) Apply a thin film of red or white lead on both the drive and coast side of the drive gear teeth. Rotate drive gear one complete revolution in both directions while load is being applied with a round bar or screwdriver between the carrier casting and differential case flange. This action will leave a distinct contact pattern on both the drive and coast side of the drive gear teeth.

(2) Observe the contact pattern on the drive gear teeth and compare with those in figures 32, 33 and 35 to determine if pattern is properly located. With pinion depth of mesh and gear backlash set properly, your contact pattern should resemble that in (Fig. 32). Notice that the correct contact pattern is well centered on both drive and coast sides of the teeth. When tooth contact patterns are obtained by hand, they are apt to be rather small. Under the actual operating load, however, the contact area increases.

(3) If after observing the contact pattern and you find it resembles that in (Fig. 33), the drive pinion is too far away from centerline of the ring gear, the contact pattern will appear high on the heel on drive side and high on toe on coast side. To correct this type tooth contact pattern, increase the thickness of shim pack located behind the rear pinion bearing cup (Fig. 34), which will cause the high heel contact on drive side to lower and move toward the toe; the high toe contact on coast side will lower and move toward the heel.

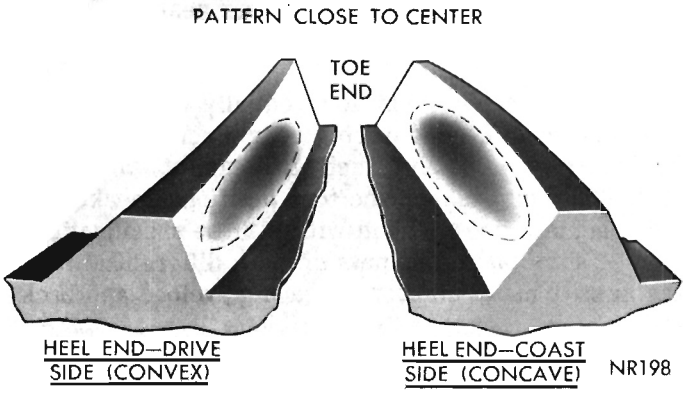

Fig. 32—Desired Tooth Contact Under Light Load

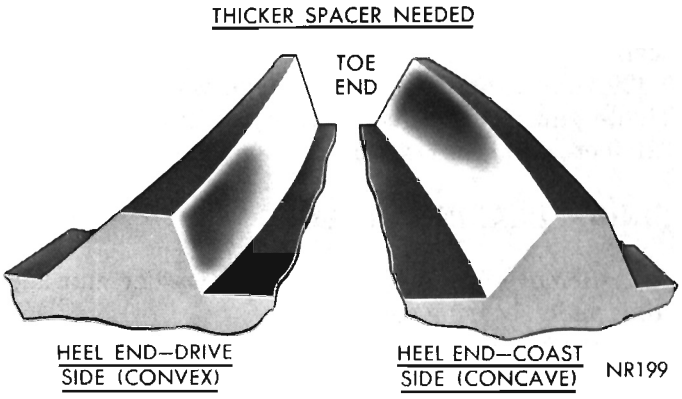

Fig. 33—Incorrect Tooth Contact Pattern (Increase Shim Pack Thickness)

(4) If after observing the contact pattern and you find it resembles that in (Fig. 35), the drive pinion is too close to the ring gear, the pattern will appear low on the toe on drive side and low heel contact on coast side. To correct this type tooth contact pattern, decrease the thickness of shim pack located behind the rear pinion bearing cup (Fig. 36), which will cause the low toe contact on drive side to raise and move toward the heel; low heel contact on coast side will raise and move toward the toe.

REAR AXLE ASSEMBLY

Installation

(1) Making sure the gasket surfaces of both the cover and carrier housing are clean, install a new

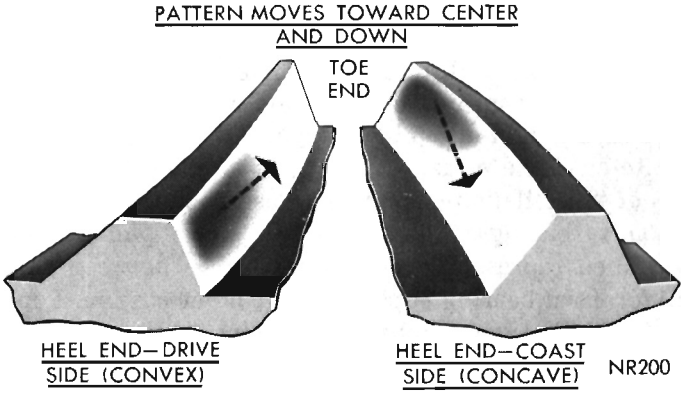

Fig. 34—Effect on Tooth Contact Pattern as Shim Pack Thickness is Increased

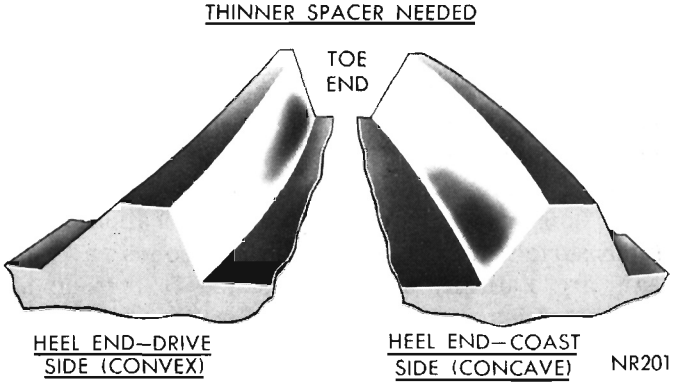

Fig. 35—Incorrect Tooth Contact Pattern (Decrease Shim Pack Thickness)

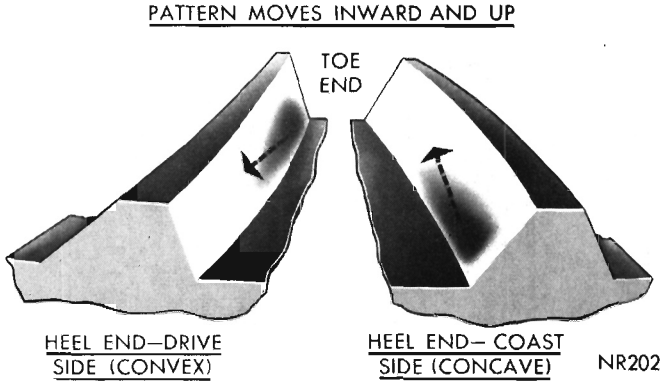

Fig. 36—Effect on Tooth Contact Pattern as Shim Pack Thickness is Decreased

gasket followed by the cover and tighten the cover bolts to 15-25 foot-pounds. Beneath one of the cover bolts, install the ratio identification tag.

(2) For correct procedure when installing axle shafts and bearings and setting axle shaft end play, see "Axle Shafts and Bearings".

(3) With body supported at front of rear springs, position rear axle assembly spring pads over the spring center bolts.

(4) Install spring "U" bolts and tighten nuts to 45 foot-pounds and install shock absorbers on spring plate studs.

(5) Connect parking brake cables.

(6) Connect hydraulic brake lines at wheel cylinders and bleed brakes, install brake drums and adjust brakes.

(7) Install rear universal joint of propeller shaft in same position as removed (match scribe marks on propeller shaft universal joint and pinion flange). Tighten universal joint clamps to 170-200 inch pounds.

(8) Install rear wheels and tighten nuts to 65 foot-pounds in the proper tightening sequence.

LUBRICATION

Refill axle housing and carrier assembly with 4-1/4 pints (9-1/4" Axle) or 5-1/2 pints (9-3/4" Axle) of lubricant. Sure-Grip differentials, use only the special multi-purpose gear lubricant intended for use in axles equipped with plate-clutch Sure-Grip differentials. Such a lubricant is available under Part Number 2585318, Special Sure-Grip Lubricant.

"SHOULD THE REAR AXLE BECOME SUBMERGED IN WATER, THE LUBRICANT MUST BE CHANGED IMMEDIATELY TO AVOID THE POSSIBILITY OF EARLY AXLE FAILURE RESULTING FROM CONTAMINATION OF THE LUBRICANT BY WATER DRAWN INTO THE VENT HOLE."

SURE-GRIP DIFFERENTIAL

INDEX

	Page
Installing Sure Grip Differential and Carrier Assembly	46
Lubrication	46
Sure Grip Differential Identification	44
Sure Grip Differential Noise	45
Sure Grip Differential	45
Removal	45
Cleaning & Inspection	45
Assembly	46
Testing Sure Grip Differential	45

GENERAL INFORMATION

A new Sure-Grip differential being offered as a special equipment option in the 7-1/4" and 8-3/4" rear axles will appear in the 1969 vehicle models (Fig. 1).

The Sure-Grip differential design is basic and simple and consists of a two piece case construction and is completely interchangeable with the conventional differential and also the previous type Sure-Grip differential (Fig. 2).

A conventional differential allows the driving wheels to rotate at different speeds while dividing the driving torque equally between them. This function is ordinarily desirable and satisfactory. However, the total driving torque can be no more than double the torque at the lower-traction wheel. When traction conditions are not the same for both driving wheels, a portion of the available traction cannot be used.

The SURE-GRIP differential allows the driving

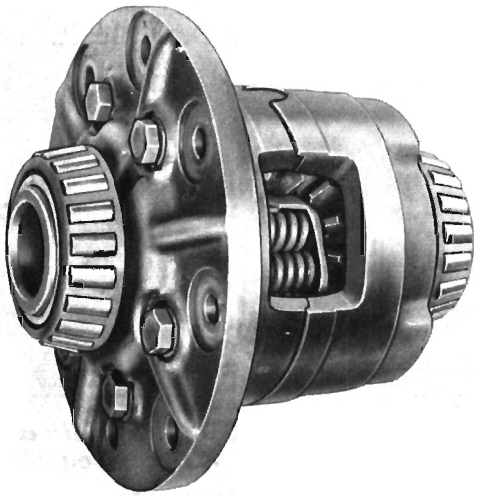

NU404

Fig. 1—Sure-Grip Differential

wheel with the better traction condition to develop more driving torque than the other wheel, so that the total driving torque can be significantly greater than with a conventional differential.

SURE-GRIP is not a locking differential. In normal driving conditions the controlled internal friction is easily overcome during cornering and turning so that the driving wheels can turn at different speeds. Extreme differences in traction conditions at the driving wheels may permit one wheel to spin.

SURE-GRIP has been engineered to perform its specialized functions with minimum effect on normal vehicle operations.

The cone clutch SURE-GRIP differentials are similar to corresponding 8-3/4 conventional differentials except for the incorporation of the helix-grooved cones that clutch the side gears to the differential case. The grooves assure maximum lubrication of the clutch surface during operation. The cones and side gears are statically spring preloaded to provide an internal resistance to differential action within the differential case itself. This internal resistance provides pulling power while under extremely low tractive conditions such as mud, snow or ice when encountered at one of the rear wheels.

During torque application to the axle, the initial spring loading of the cones is supplemented by the gear separating forces between the side gears and differential pinions which progressively increases the friction in the differential. It should be remembered that the Sure-Grip differential is not a positive locking type and will release before excessive driving force can be applied to one wheel.

SURE-GRIP DIFFERENTIAL IDENTIFICATION

Identification of sure-grip differential assembly can easily be made by lifting both rear wheels off the

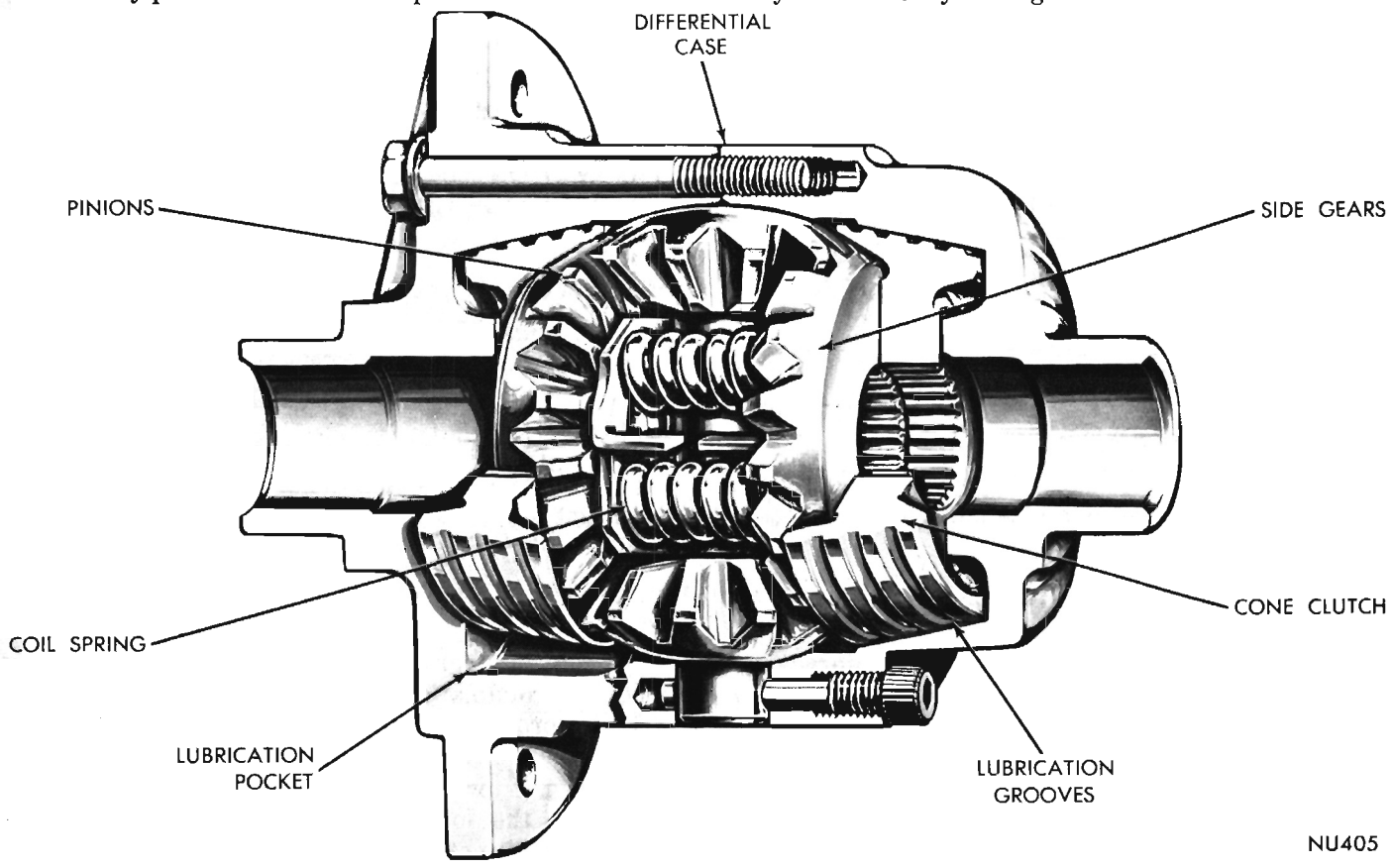

Fig. 2—Sure-Grip Differential (Schematic)

ground and turning them. If both rear wheels turn in the same direction simultaneously, the vehicle is equipped with a Sure-Grip Differential. Another means of identification is by removing the filler plug and using a flashlight to look through the filler plug hole to identify the type of differential case.

SERVICE PROCEDURES

SURE-GRIP DIFFERENTIAL NOISE (Chatter—Moan)

Noise complaints related to rear axles equipped with cone-clutch SURE-GRIP should be checked to determine the source of the noise. If a vehicle ride check produces the noise in turns but not straight ahead, the probable cause is incorrect or dissipated rear axle lubricant. The following draining and flushing procedure has been established for the Sure-Grip Differential before it is removed from the vehicle and replaced.

CAUTION: When servicing vehicles equipped with Sure-Grip differentials do not use the engine to rotate axle components unless both rear wheels are off the ground. Sure-Grip equipped axles can exert a significant driving force is one wheel is in contact with floor and could cause the vehicle to move.

(1) With lubricant of rear axle assembly at operating temperature raise car on hoist so rear wheels are free to turn.

(2) Loosen and remove fill plug and using a suction gun remove as much of the old lubricant as possible.

(3) Fill axle to proper level with multi-Purpose Hypoid Gear Lubricant Part Number 2933565 or equivalent. Reinstall fill plug and tighten.

(4) Start engine of vehicle and engage in gear and run on hoist with rear wheels free to turn to approximately 40 MPH for ten (10) minutes. This thoroughly circulates the lubricant and brings it to operating temperature.

(5) Stop vehicle and remove the fill plug and using a suction gun remove as much of the lubricant as possible.

(6) Refill axle to proper level with multi-Purpose Hypoid Gear Lubricant Part Number 2933565 or equivalent. Reinstall fill plug and tighten.

(7) Lower vehicle on hoist and return to customer to drive and evaluate for approximately 100 miles to determine if lubricant corrects the noise complaint.

If after the vehicle is driven approximately 100 miles and the noise condition is still evident, remove the differential and carrier assembly and replace the Sure-Grip Differential. **The Sure-Grip Differential and the internal parts are serviced as an assembly only.**

TESTING SURE-GRIP DIFFERENTIAL

The Sure-Grip differential can be checked to determine if its performance is satisfactory without removing the differential and carrier assembly from the vehicle.

(1) Position vehicle on a hoist with engine off and the transmission selector lever in park if automatic or in low gear if manual.

(2) Attempt to rotate wheel by applying turning force with hands gripping tire tread area (Fig. 3).

(3) If you find it extremely difficult, if not impossible to manually turn either wheel, you can consider the sure-grip differential to be performing satisfactorily. If you find it relatively easy to continuously turn either wheel the differential is not performing properly and should be removed and replaced. The Sure-Grip Differential and internal parts are serviced as a complete assembly only. **Under no circumstances should the differential be removed and disassembled and reinstalled.**

SURE-GRIP DIFFERENTIAL

CAUTION: During removal and installation of axle shafts, DO NOT rotate on axle shaft unless both are in position. Rotation of one axle shaft without the other in place may result in misalignment of the two spline segments with which the axle shaft spline engages, and will necessitate difficult realignment procedures when shaft is installed.

Removal

Follow the same procedure outlined under conventional differential removal.

Cleaning and Inspection

(1) Clean the Sure-Grip differential assembly in a fast evaporating mineral spirits or a dry cleaning sol-

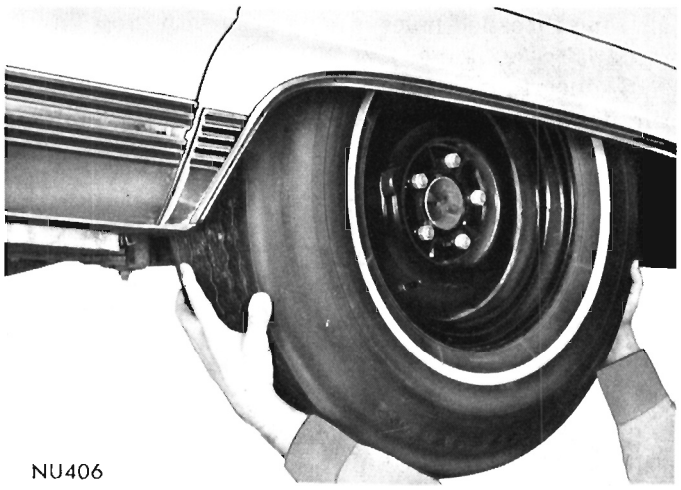

NU406

Fig. 3—Testing Sure-Grip Differential Effectiveness

vent and with exception of bearings, dry with compressed air.

(2) Inspect differential bearing cones, cups and rollers for pitting, spalling or other visible damage. If replacement is necessary, remove bearing cones from differential case using Tool C-293 and adapter plates No. 43.

(3) Visually inspect differential case for cracks or other visible damage which might render it unfit for further service.

Assembly

If during cleaning and inspection the differential bearings were found to be unfit for further use and were removed follow this procedure for installation of new bearings.

(1) Position each differential bearing cone on hub of differential case (taper away from drive gear) and with installing Tool C-4086, install bearing cones. An arbor press may be used in conjunction with installing tool. **CAUTION:** Never exert pressure against the bearing cage, since this would damage the bearing.

(2) If the ring gear was removed from the sure-grip differential case or is being replaced with a new ring gear for any reason, new nylok drive gear screws must be installed.

IMPORTANT: The procedure for installing the ring gear on differential case for the 8-3/4" axle differs from that of the 7-1/4" axle. This procedure must be followed so the ring gear seats on the differential case properly.

(3) Using an Arkansas stone, relieve the sharp edge of the chamfer on the inside diameter of the ring gear (Fig. 24 in 8-3/4" Axle section of this group). This is very important, otherwise during the installation of ring gear on differential case, the sharp edge will remove metal from the pilot diameter of case and can get imbedded between differential case flange and gear; causing gear not to seat properly.

(4) Position ring gear on differential case pilot aligning threaded holes of ring gear with those in differential case flange.

(5) Insert drive gear screws (left hand threads) through case flange and into ring gear. After all cap screws are properly started, tap ring gear against differential case flange with a non-metallic mallet.

(6) Position differential case unit between brass jaws of a vise and alternately tighten each cap screw to 55 foot-pounds.

NOTE: Before installation of differential case into carrier lubricate the inside of differential assembly with Multi-Purpose Hypoid Gear Lubricant Part Number 2933565 or equivalent. Do not use any other lubricant other than this special lubricant.

(7) Follow procedure outlined in conventional axle assembly for setting drive pinion depth of mesh, drive gear backlash adjustment and bearing preload adjustment.

INSTALLING SURE-GRIP DIFFERENTIAL AND CARRIER ASSEMBLY

(1) Using a new gasket install carrier assembly in axle housing. Tighten mounting nuts to 45 foot-pounds.

(2) Refer to "Installation of Rear Axle Shaft", when installing axle shafts.

(3) Connect the rear universal joint.

(4) Before lowering the rear wheels of the vehicle to the floor, adjust rear brakes. **CAUTION:** Both rear wheels must be raised off the floor when adjusting brakes.

LUBRICATION

Every six months check the fluid level in the axle through the filler plug hole. When checking the level, be sure the vehicle is in a level position on an axle or drive on type hoist. "See Lubrication Section" for proper level of specific axle assembly.

In Sure-Grip Differentials, use only the Multi-Purpose Hypoid Gear Lubricant Part Number 2933565 or equivalent. Do not use any other lubricant other than this special lubricant.

Anticipated Temperature Range	Viscosity Grade
Above — 10°F.	SAE 90
As low as — 30°F.	SAE 80
Below — 30°F.	SAE 75

SPECIFICATIONS

	7-1/4" Axle
TYPE	Semi-Floating Hypoid
Ring Gear Diameter	7.250
Number of Differential Pinions	2
DIFFERENTIAL BEARINGS	
Adjustment by	Spacer Washer
	.254-.284 inch in .002 inch graduations
Carrier Bearing Preload Spread	.003-.006
PINION AND DRIVE GEAR BACK LASH	.004-.007" at point of minimum back lash
PINION BEARING PRELOAD ADJUSTMENT BY	Spacer Washers
	.074-.106 inch in .001 variations

PINION BEARING DRAG TORQUE	15-25 inch-pounds
PINION DEPTH OF MESH ADJUSTMENT BY	Spacer Washers
	.084-.100 inch in .002 inch graduations
RUNOUT-CASE AND DRIVE GEAR	.005 inch Maximum
WHEEL BEARING TYPE	Single Row Sealed Ball
LUBRICATION	
Capacity	2 Pints (1-3/4 Imperial)
Type	Multi-Purpose Gear Lubricant as defined by MIL-L-2105B is used on all rear axles, such a lubricant is available under Part No. 2933565, Hypoid Gear Lubricant.

8-3/4" Axle

TYPE	Semi-Floating Hypoid
Ring Gear Diameter	8.750
PINION BEARINGS	
Type	Tapered Roller
Number Used	2
Adjustment (Small Stem or Large Stem) (Step Type Pinions)	Selected Shims
(Large Stem) (Tapered Pinion)	Collapsible Spacer
Pre-Load Torque (Seal Removed)	20 to 30 inch-pounds
DIFFERENTIAL BEARINGS	
Type	Tapered Roller
Number Used	2
Adjustment	Adjusting Nut
RING GEAR AND PINION	
Serviced in	Matched Sets
Ring Gear Runout	.005" Max.
Back Lash	.006 to .008"
DIFFERENTIAL SIDE GEAR CLEARANCE	
With Gauge	.001 to .012"
WHEEL BEARINGS	
Type	Tapered Roller
Adjustment	Adjusting Nut
End Play	.008-.018
Lubrication	Multi Purpose
LUBRICATION	Grease NLGI grade 2 E.P.
Capacity	4 Pints (3-1/4 Imperial)
Type	Multi-Purpose Gear Lubricant as defined by MIL-L-2105B is used on all rear axles, such a lubricant is available under Part No. 2933565, Hypoid Gear Lubricant.

9-1/4" and 9-3/4" Axles

TYPE	Semi-Floating Hypoid
Ring Gear Diameter	9.250 and 9.750
PINION BEARINGS	
Type	Taper Roller
Number Used	2
Adjustment	Select Shims
Pinion bearing drag Torque (seal removed)	10-20 inch-pounds
DIFFERENTIAL	Sure-Grip
Bearings (Type)	Taper Roller
Number Used	2
Pre-Load Adjustment	Select Shims
RING GEAR AND PINION	Hypoid
Serviced in	Matched Sets
Pinion depth of mesh adjustment	Select Shims
Pinion and Ring Gear Backlash	.004-.009" at point of minimum backlash
Runout-differential case and ring gear backface	.006" maximum
WHEEL BEARINGS	
Type	Taper Roller
Adjustment	Threaded Adjusting Nut
End Play	.008-.018
Lubrication	Multi Purpose Grease NLGI grade 2 E.P.

LUBRICATION

Capacity ..... 9-1/4" Axle 4-1/4 Pts. (3-1/4 Imperial)
9-3/4" Axle 5-1/2 Pts. (4-1/2 Imperial)

Type ..... Use only the special multi-purpose gear lubricant intended for use in Plate-Clutch Sure-Grip differentials. Such a lubricant is available under Part No. 2585318, Special Sure-Grip Lubricant.

TIGHTENING REFERENCE

	7-1/4" Axle Pounds Foot	Inch
Differential Bearing Cap Bolts	40	
Ring Gear to Differential Case Bolts (Left Hand Thread)	55	
Drive Pinion Flange Nut	240	(Min.)
Carrier Cover Bolts	20	
Axle Shaft Retainer Nuts	35	
Propeller Shaft Bolts (Rear)	15	
Spring Clip (U Bolt) Nuts	40	(Max.)
Wheel Stud Nuts	55	
Shock Absorber Stud Nuts (Lower)	50	

	8-3/4" Axle Pounds Foot	Inch
Differential Bearing Cap Bolts	90	
Ring Gear to Differential Case Bolts (Left Hand Thread)	55	
Drive Pinion Flange Nut (Small Stem or Large Stem Step Pinion)	240	(Min.)
(Large Stem Tapered Pinion)	170	(Min.)
Carrier to Axle Housing Bolt Nuts	45	
Axle Shaft Retainer Nuts	35	
Propeller Shaft Bolts (Rear)	15	
Spring Clip (U Bolt) Nuts	45	
Wheel Stud Nuts	65	
Shock Absorber Stud Nuts (Lower)	50	

	9-1/4" Axle Pounds Foot	Inch	9-3/4" Axle Pounds Foot	Inch
Differential Bearing Cap Bolts	70-90		70-90	
Differential Case Half Retaining Bolts	35-45		35-45	
Ring Gear To Differential Case Bolts	55-75		100-120	
Drive Pinion Flange Nut	200-220		250-270	
Carrier Cover Bolts	15-25		15-25	
Axle Shaft Retainer Nuts	30-35		30-35	
Propeller Shaft Bolts (Rear)		170-200		170-200
Spring Clip (U-Bolt) Nuts	45		45	
Wheel Stud Nuts	65		65	
Shock Absorber Stud Nuts	50		50	

BRAKES

CONTENTS

	Page		Page
DISC BRAKES (BENDIX)	36	POWER BRAKES (BENDIX)	22
DISC BRAKES (KELSEY HAYES) Floating Caliper	44	POWER BRAKES (MIDLAND-ROSS)	20
DISC BRAKES (KELSEY-HAYES)	25	SERVICE BRAKES	1-5
GENERAL INFORMATION	1	SERVICE DIAGNOSIS	1
MASTER CYLINDER	10-55-59	SPECIFICATIONS	64
PARKING BRAKES	16	WHEEL CYLINDERS	13

GENERAL INFORMATION

The new Models are equipped with servo contact, two shoe, internal expanding brakes with application adjusters. The lower ends of the brake shoes are connected by a tubular star wheel adjusting screw (Fig. 1). Police cars with heavy duty brakes are not self-adjusting.

SERVICE BRAKES

SERVICE DIAGNOSIS

Condition	Possible Cause	Correction
PEDAL GOES TO FLOOR	(a) Fluid low in reservoir.	(a) Fill and bleed master cylinder.
	(b) Air in hydraulic brake system.	(b) Fill and bleed hydraulic brake system.
	(c) Improperly adjusted brake.	(c) Repair or replace self-adjuster as required.
	(d) Leaking wheel cylinders.	(d) Recondition or replace wheel cylinder and replace both brake shoes.
	(e) Loose or broken brake lines.	(e) Tighten all brake fittings or replace brake line.
	(f) Leaking or worn master cylinder.	(f) Recondition or replace master cylinder and bleed hydraulic system.
	(g) Excessively worn brake lining.	(g) Reline and adjust brakes.
SPONGY BRAKE PEDAL	(a) Air in hydraulic system.	(a) Fill master cylinder and bleed hydraulic system.
	(b) Improper brake fluid (low boiling point).	(b) Drain, flush and refill with brake fluid.
	(c) Excessively worn or cracked brake drums.	(c) Replace all faulty brake drums.
	(d) Broken pedal pivot bushing.	(d) Replace nylon pivot bushing.
BRAKES PULLING	(a) Contaminated lining.	(a) Replace contaminated brake lining.
	(b) Front end out of alignment.	(b) Align front end.
	(c) Incorrect brake adjustment.	(c) Adjust brakes and check fluid.
	(d) Unmatched brake lining.	(d) Match primary, secondary with same type of lining on all wheels.
	(e) Brake drums out of round.	(e) Grind or replace brake drums.
	(f) Brake shoes distorted.	(f) Replace faulty brake shoes.
	(g) Restricted brake hose or line.	(g) Replace plugged hose or brake line.
	(h) Broken rear spring.	(h) Replace broken spring.
SQUEALING BRAKES	(a) Glazed brake lining.	(a) Cam grind or replace brake lining.
	(b) Saturated brake lining.	(b) Replace saturated lining.
	(c) Weak or broken brake shoe retaining spring.	(c) Replace retaining spring.
	(d) Broken or weak brake shoe return spring.	(d) Replace return spring.
	(e) Incorrect brake lining.	(e) Install matched brake lining.
	(f) Distorted brake shoes.	(f) Replace brake shoes.

Condition	Possible Cause	Correction
	(g) Bent Support Plate.	(g) Replace support plate.
	(h) Dust in brakes or scored brake drums.	(h) Blow out brake assembly with compressed air and grind brake drums.
CHIRPING BRAKES	(a) Out of round drum or eccentric axle flange pilot.	(a) Repair as necessary, and lubricate as recommended.
DRAGGING BRAKES	(a) Incorrect wheel or parking brake adjustment.	(a) Adjust brakes and check fluid.
	(b) Parking brakes engaged.	(b) Release parking brakes.
	(c) Weak or broken brake shoe return spring.	(c) Replace brake shoe return spring.
	(d) Brake pedal binding.	(d) Free up and lubricate brake pedal and linkage.
	(e) Master cylinder cup sticking.	(e) Recondition master cylinder.
	(f) Obstructed master cylinder relief port.	(f) Use compressed air and blow out relief port.
	(g) Saturated brake lining.	(g) Replace brake lining.
	(h) Bent or out of round brake drum.	(h) Grind or replace faulty brake drum.
HARD PEDAL	(a) Brake booster inoperative.	(a) Replace brake booster.
	(b) Incorrect brake lining.	(b) Install matched brake lining.
	(c) Restricted brake line or hose.	(c) Clean out or replace brake line or hose.
	(d) Frozen brake pedal linkage.	(d) Free up and lubricate brake linkage.
WHEEL LOCKS	(a) Contaminated brake lining.	(a) Reline both front or rears of all four brakes.
	(b) Loose or torn brake lining.	(b) Replace brake lining.
	(c) Wheel cylinder cups sticking.	(c) Recondition or replace wheel cylinder.
	(d) Incorrect wheel bearing adjustment.	(d) Clean, pack and adjust wheel bearings.
BRAKES FADE (HIGH SPEED)	(a) Incorrect lining.	(a) Replace lining.
	(b) Distorted or out of round brake drums.	(b) Grind or replace drums.
	(c) Overheated brake drums.	(c) Inspect for dragging brakes.
	(d) Incorrect brake fluid (low boiling temperature).	(d) Drain, flush, refill and bleed hydraulic brake system.
	(e) Saturated brake lining.	(e) Reline both front or rear or all four brakes.
PEDAL PULSATES	(a) Bent or out of round brake drum.	(a) Grind or replace brake drums.
BRAKE CHATTER AND SHOE KNOCK	(a) Out of round brake drum.	(a) Grind or replace brake drums.
	(b) Loose support plate.	(b) Tighten support plate bolts to proper specifications.
	(c) Bent support plate.	(c) Replace support plate.
	(d) Distorted brake shoes.	(d) Replace brake shoes.
	(e) Machine grooves in contact face of brake drum. (Shoe Knock).	(e) Grind or replace brake drum.
	(f) Contaminated brake lining.	(f) Replace either front or rear or all four linings.
BRAKES DO NOT SELF ADJUST	(a) Adjuster screw frozen in thread.	(a) Clean and free-up all thread areas.
	(b) Adjuster screw corroded at thrust washer.	(b) Clean threads and replace thrust washer if necessary.
	(c) Adjuster lever does not engage star wheel.	(c) Repair, free up or replace adjuster as required.
	(d) Adjuster installed on wrong wheel.	(d) Install correct adjuster parts.

SERVICE PROCEDURES

ADJUSTING SERVICE BRAKES

Normally self adjusting brakes will not require manual adjustment but in the event of a brake reline it may be advisable to make the initial adjustment manually to speed up the adjusting time.

(1) Jack up vehicle so all wheels are free to turn.

(2) Remove rear adjusting hole cover from brake supports of vehicle.

(3) **Be sure parking brake lever is fully released,**

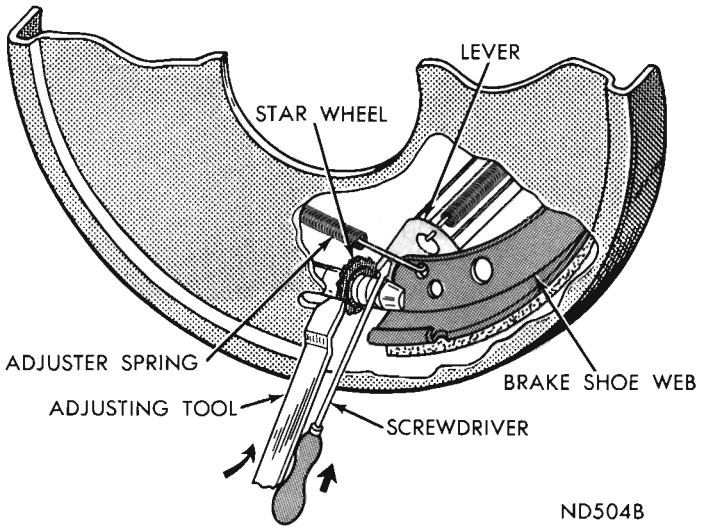

Fig. 1—Adjusting Brakes

then back off parking brake cable adjustment so there is slack in cable.

(4) Insert adjusting tool C-3784, into star wheel of adjusting screw. Move handle of tool upward until a slight drag is felt when road wheel is rotated.

(5) Insert a thin screw driver into brake adjusting hole and push adjusting lever out of engagement with star wheel. **(Care should be taken not to bend adjusting lever** (Fig. 1), while holding adjusting lever out of engagement, back off star wheel to insure a free wheel with no brake shoe drag.

(6) Repeat above adjustment at each wheel. The adjustment must be equal at all wheels. Install adjusting hole covers in brake supports.

(7) Adjust parking brake **after** wheel brake adjustment.

It is important to follow the above sequence to avoid the possibility of the parking brake system causing brake drag as may occur if the parking brakes are adjusted before the service brakes.

TESTING APPLICATION ADJUSTER OPERATION

Place the vehicle on a hoist, with a helper in the driver's seat to apply the brakes. Remove the plug from the rear adjustment slot in each brake support plate to observe the adjuster star wheel. Then, to exclude the possibility of maximum adjustment; that is, the adjuster refuses to operate because the closest possible adjustment has been reached; the star wheel should be backed off approximately 30 notches. It will be necessary to hold the adjuster lever away from the star wheel to allow backing off of the adjustment.

Spin the wheel and brake drum in the reverse direction and apply the brakes vigorously. This will provide the necessary inertia to cause the secondary brake shoe to leave the anchor. The wrap up effect will move the secondary shoe, and the cable will pull the adjuster lever up. Upon application of the brake pedal, the lever should move downward, turning the star wheel. Thus, a definite rotation of the adjuster star wheel can be observed if the automatic adjuster is working properly. If by the described procedure one or more automatic adjusters do not function properly, the respective drum must be removed for adjuster servicing.

BLEEDING BRAKE SYSTEM

Clean all dirt and foreign material from the cover of the master cylinder to prevent any dirt from falling into the master cylinder reservoir when the cover is removed.

Using the one man bleeder tank C-3496B (with adapter) provides a convenient means of keeping the master cylinder full while pressurizing the hydraulic system for bleeding. (Complete bleeding of the dual master cylinder is important! See Bleeding the Master Cylinder in this Section.) **Manual Bleeding is not recommended.**

Tighten the brakes of each wheel until the brakes are locked. (This reduces the movement of the wheel cylinder cups and assists in bleeding).

Starting with the right rear wheel clean all dirt from the bleeder valve. Place bleeder hose C-650 on the bleeder valve and insert the other end of the bleeder hose into a clear jar half filled with clean brake fluid. (This will permit the observation of air bubbles as they are being expelled from the hydraulic system and also prevent air from being drawn back into the system. (Follow the manufacturers instructions in the use of the bleeder tools.)

Continue this bleeding operation on the other wheels, starting with the left rear wheel, then the right front and finishing with the left front wheel.

If necessary, repeat this bleeding operation if there is any indication (a low, soft or spongy brake pedal) of air remaining in the hydraulic system. Readjust the brakes as described previously.

TEST FOR FLUID CONTAMINATION

To determine if contamination exists in the brake fluid (as indicated by swollen or deteriorated rubber cups), the following test can be made.

Place a small amount of the drained brake fluid into a small clear glass bottle. Separation of the fluid into distinct layers will indicate mineral oil content. **If there is any question of mineral oil content, as indicated by swollen or deteriorated rubber parts, drain and flush thoroughly and replace all rubber parts.**

WHEEL STUD NUT TIGHTENING

The tightening sequence and torquing of the wheel stud nuts is of great importance to insure efficient brake operation. The use of an impact or long handled wrench may distort the drum.

A criss-cross tighening sequence should be used (Fig. 2). Tighten all the stud nuts to one-half the specified torque first, (30 ft. lbs.), and then repeat the sequence tightening to the specified 55 foot-pounds. (65 foot-pounds on 10 and 11 inch brakes).

BRAKE HOSE AND TUBING

The flexible hydraulic brake hose should always be installed in the vehicle by first tightening the male end of the hose in the wheel cylinder or rear axle housing tee. The hose is then clipped to the hose bracket in a manner to give minimum twist. Excessive twist can result in hose interference problems with possible hydraulic system failure.

Inspection of brake hose and tubing should be included in all brake service operations. The hoses should be checked for:

(1) Correct length, severe surface cracking, pulling, scuffing or worn spots. (Should the cotton fabric casing of the hose be exposed to weather by cracks or abrasions in the rubber hose cover, eventual deterioration of hose can take place with possible burst failure).

(2) Faulty installation to cause twisting, wheel, tire or chassis interference.

Always use factory recommended hose to insure quality, correct length and superior fatigue life. Care should be taken to make sure that the tube and hose mating surfaces are clean and free from nicks and burrs. New copper seal washers should be used and the tube nuts and connections should be properly made and tightened. Double wall steel tubing should always be used to insure superior fatigue life. Care should be taken when replacing brake tubing, to use the proper bending and flaring tools and to avoid routing the tubes against sharp edges, moving components or in hot areas. All tubes should be properly attached with recommended retaining clips.

Steel tubing is used to conduct hydraulic pressure to the front and rear brakes. Flexible rubber hose is used at both front brakes and at a rear axle junction block. Steel tubing is used from the junction block to both rear wheel cylinders. All fittings, tubing and hoses should be inspected for rusted, damaged or defective flaring seats. The steel tubing is equipped with a double flare or inverted seat to insure more positive seating in the fitting. To repair or reflare tubing proceed as follows:

(1) Using Tool C-3478, cut off damaged seat or damaged tubing (Fig. 3).

(2) Ream out any burred or rough edges showing on inside edges of tubing. This will make the ends of tubing square and insure better seating of flared end tubing. **Place compression nut on tubing prior to flaring tubing.**

(3) To flare tubing open handles of flaring Tool C-3838 and rotate jaws of tool until the mating jaws of tubing size are centered in area between vertical posts.

(4) Slowly close handles with tubing inserted in jaws but do not apply heavy pressure to handle as this will lock tubing in place.

(5) Place gauge "Form A" on edge over end of tubing and push tubing through jaws until end of

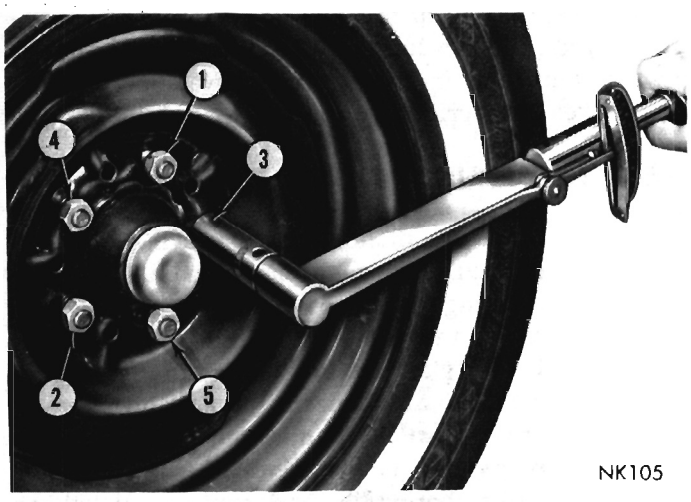

Fig. 2—Wheel Stud Nut Tightening Sequence

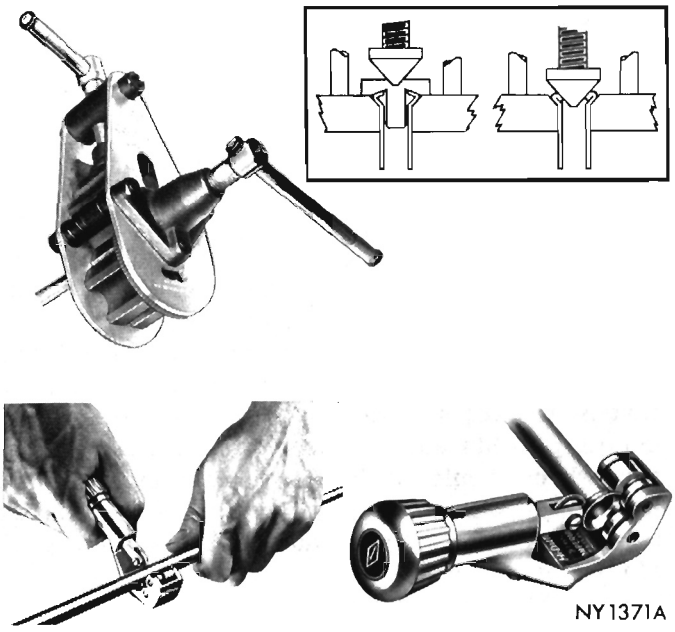

Fig. 3—Cutting and Flaring Steel Tubing

tubing contacts the recessed notch of gauge matching the size of tubing (Fig. 3).

(6) Squeeze handles of flaring tool and lock tubing in place.

(7) Place proper sized plug of gauge "A" down in end of tubing. Swing compression disc over gauge and center tapered flaring screw in recess of disc.

(8) Lubricate taper of flaring screw and screw in until plug gauge has seated on jaws of flaring tool. This action has started to invert the extended end of the tubing.

(9) Remove gauge and apply lubricant to tapered end of flaring screw and continue to screw down until tool is firmly seated in tubing.

(10) Remove tubing from flaring tool and inspect seat.

(11) Clean seat and tube of any lubricant before connecting to hydraulic system.

SERVICE BRAKES

INDEX

	Page
Brake Drum Removal	
Front Brake Drums	5
Rear Brake Drums	5
Brake Shoe Removal	
Front Brake Shoes	5
Rear Brake Shoes	6
Cleaning and Inspection	6
Grinding Recommendations	7
Brake Shoe Installation	
Front Brake Shoes	8
Rear Brake Shoes	9
Brake Drum Installation	
Front Brake Drums	10
Rear Brake Drums	10

SERVICE PROCEDURES

The eleven inch brakes used on Police and heavy duty vehicles, (Fig. 3) are equipped with manual adjusters. The service procedures covering these brakes are identical to the passenger car, with exception of reference to application adjusters. Illustrations of the various service procedures will not always show any one specific brake.

BRAKE DRUM REMOVAL

Removing Front Brake Drums

To aid in brake drum removal loosen brake star adjusting wheel.

(1) Remove rear plug from brake adjusting access hole.

(2) Insert a thin screw driver into brake adjusting hole and push adjusting lever away from star adjusting wheel. **Care should be taken not to bend adjusting lever.**

(3) Insert Tool C-3784 into brake adjusting hole and engage notches of brake adjusting star wheel. Release brake adjustment by prying down with adjusting tool.

(4) Remove wheel cover, grease cap, cotter pin, lock, adjusting nut, outer wheel bearing and remove wheel and drum assembly from spindle to expose brake linings (Figs. 1, 2 or 3).

(5) Inspect brake lining for wear, shoe alignment, or contamination from grease or brake fluid.

Removing Rear Brake Drums

(1) Remove rear plug from brake adjusting access hole.

(2) Insert a thin screw driver into brake adjusting hole and hold adjusting lever away from notches of adjusting screw.

(3) Insert Tool C-3784 into brake adjusting hole and engage notches of brake adjusting screw. Release brake by prying down with adjusting tool.

(4) Remove rear wheel and clips from wheel studs that holds drum on axle. Remove drum.

(5) Inspect brake lining for wear, shoe alignment or contamination from grease or brake fluid.

BRAKE SHOE REMOVAL

Removing Front Brake Shoes

(1) Using Tool C-3785 remove brake shoe return springs (Fig. 4). (Note how secondary spring overlaps primary spring). (Fig. 1).

(2) Slide eye of automatic adjuster cable off anchor and unhook from adjusting lever. Remove cable, overload spring, cable guide and anchor plate.

(3) Disengage adjusting lever from spring by sliding forward to clear pivot, then working out from under spring. Remove spring from pivot. Remove automatic adjuster spring from secondary shoe web and disengage from primary shoe web. Remove spring. (Eleven inch brake only).

(4) Remove brake shoe retainers, springs and nails, using Tool C-4070, (Fig. 5).

(5) Disengage primary and secondary shoes from push rods (if so equipped) and remove from support. Remove adjusting star wheel assembly from shoes.

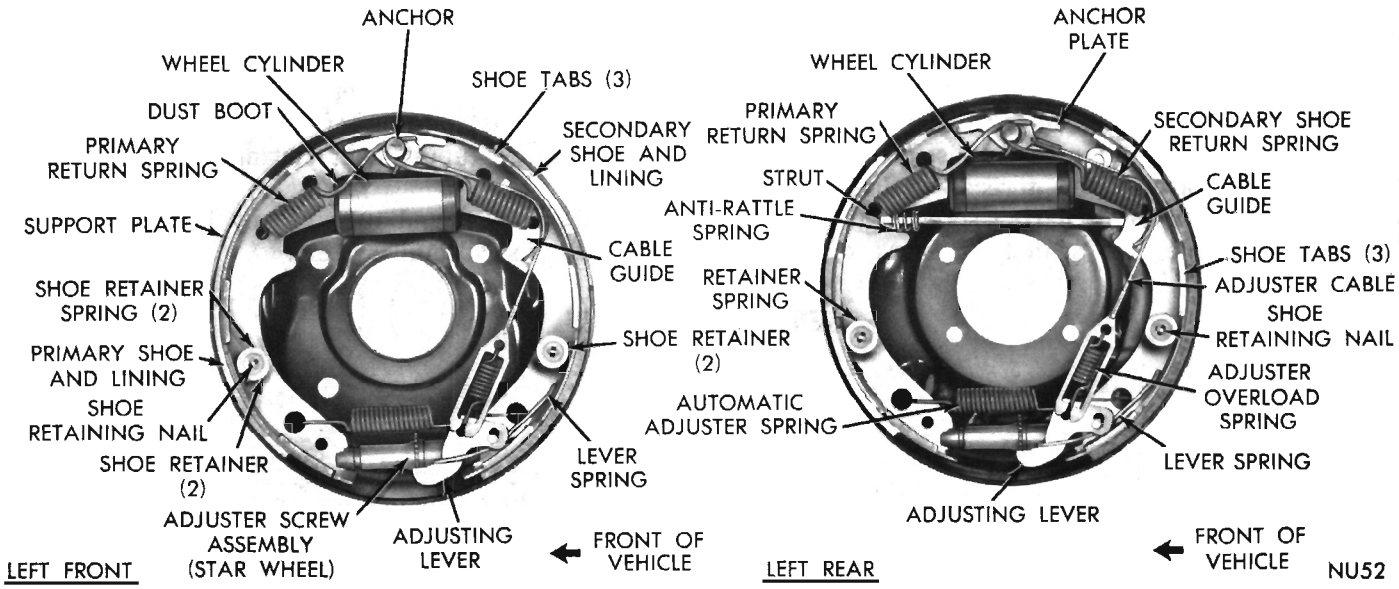

Fig. 1—Nine Inch Brake Assembly

Removing Rear Brake Shoes

(1) Remove rear wheel, and drum retaining clips. Remove drum.

(2) Using Tool C-3785, remove brake shoe return springs (Fig. 6). (Note how secondary spring overlaps primary spring). (Fig. 1).

(3) Slide eye of automatic adjuster cable off anchor and then unhook from adjusting lever. Remove cable, overload spring, cable guide and anchor plate.

(4) Disengage adjusting lever from spring by sliding forward to clear pivot, then working out from under spring. Remove spring from pivot. Remove automatic adjuster spring from secondary shoe web and disengage from primary shoe web. Remove spring. (Eleven inch brake only).

(5) Remove brake shoe retainers, springs and nails. Using Tool C-4070, (Fig. 7).

(6) Spread anchor ends of primary and secondary shoes and remove parking brake lever strut and anti-rattle spring (Fig. 8).

(7) Disengage parking brake cable from parking brake lever.

(8) Disengage primary and secondary shoes from push rods (if so equipped) and remove from support. Remove adjusting star wheel assembly from shoes.

CLEANING AND INSPECTION

Wipe or brush clean (dry) the metal portions of the brake shoes. Examine the lining contact pattern to determine if the shoes are bent. The lining should show contact across the entire width, extending from

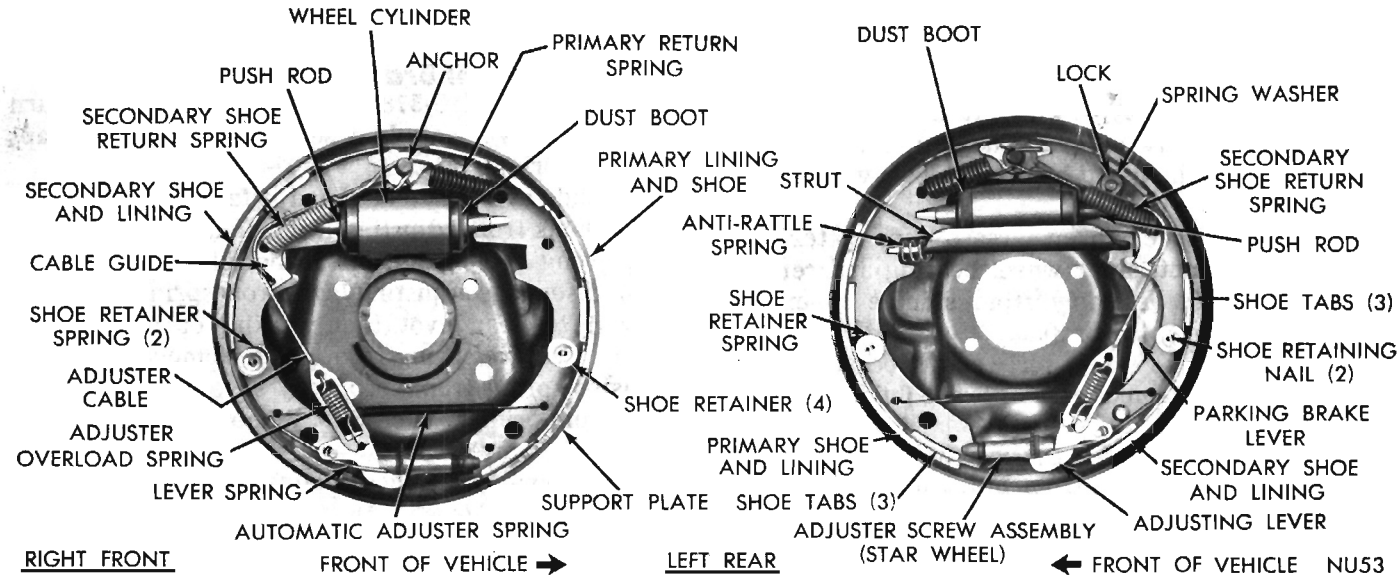

Fig. 2—Ten Inch Brake Assembly

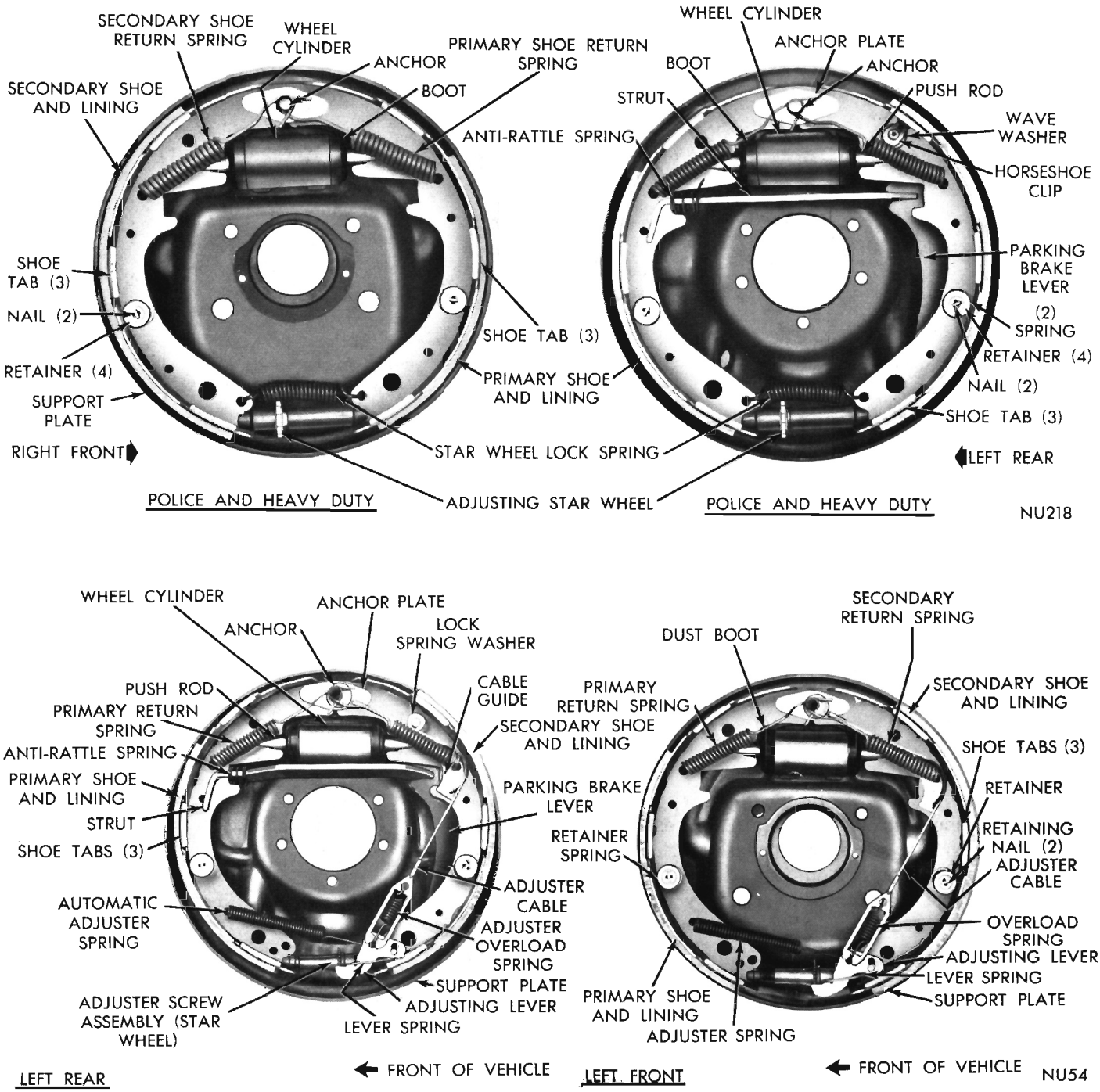

Fig. 3—Eleven Inch Brake Assemblies

heel to toe. Shoes showing contact only on one side should be replaced. Shoes having sufficient lining but lack of contact at toe and heel should be measured for proper grind.

Clean the support, using a suitable solvent, then inspect for burrs. Remove if necessary. Clean and lubricate threads of the adjusting screws, then inspect for pulled or stripped threads.

New brake shoe return springs and hold down springs should be installed where the old springs have been subjected to overheating or if their strength is questionable. Spring paint discoloration or distorted end coils would indicate an overheated spring.

GRINDING RECOMMENDATIONS

Brake Shoe Lining—New lining should be measured and ground .060″ to .080″ (maximum under the drum diameter). When replacing brake shoe and lining assemblies, always check them in the drum they are to be used with to insure that they have the recommended radius grind. This grind, which should

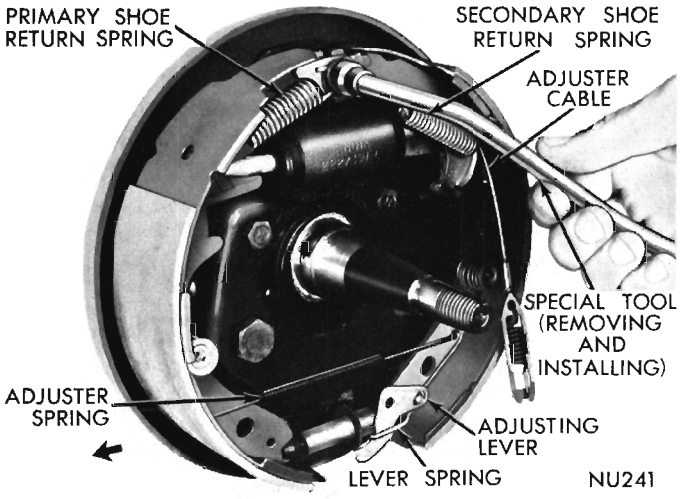

Fig. 4—Removing Shoe Return Springs (Left Front)

provide at least .004 inch heel and toe clearance, is necessary for proper lining to drum contact during brake application.

Drum Refacing—Measure the drum runout with an accurate gauge. Drum runout should not exceed .006 inch out of round. If the drum runout is in excess of .006 inch, (total indicator run-out) the drum should be refaced. Remove only as much material as is necessary to clean up the drum. **Do not reface more than .060 inch over the standard drum diameter.**

BRAKE SHOE INSTALLATION

Installing Front Brake Shoes (Figs. 1, 2 or 3)

Lubricate shoe tab contact area (6 places) on support plate with Chrysler support plate lubricant, Part number 2932524 or equivalent (Fig. 11).

(1) Match a primary with a secondary brake shoe and place them in their relative position on a work bench.

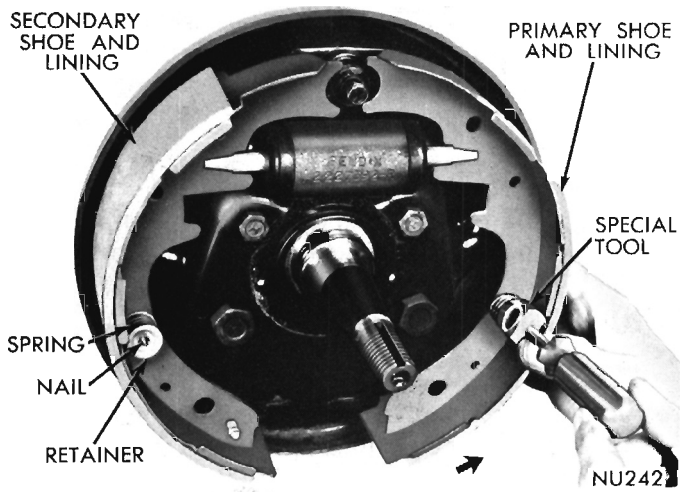

Fig. 5—Removing or Installing Shoe Retainers, Springs and Nails (Right Front)

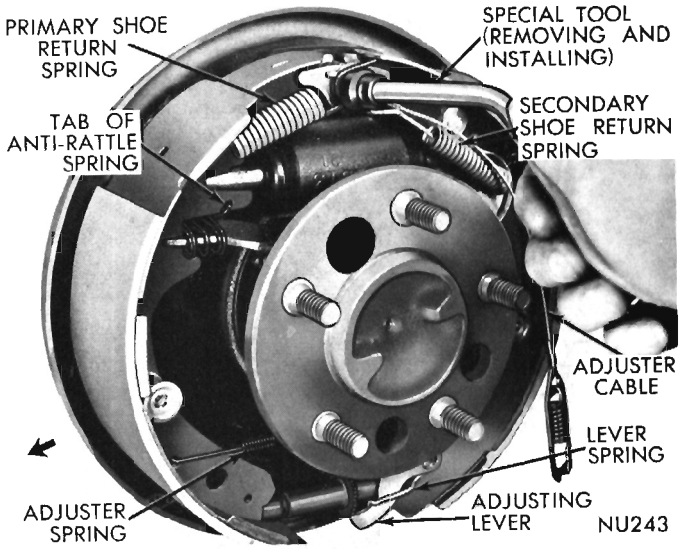

Fig. 6—Removing Shoe Return Springs (Left Rear)

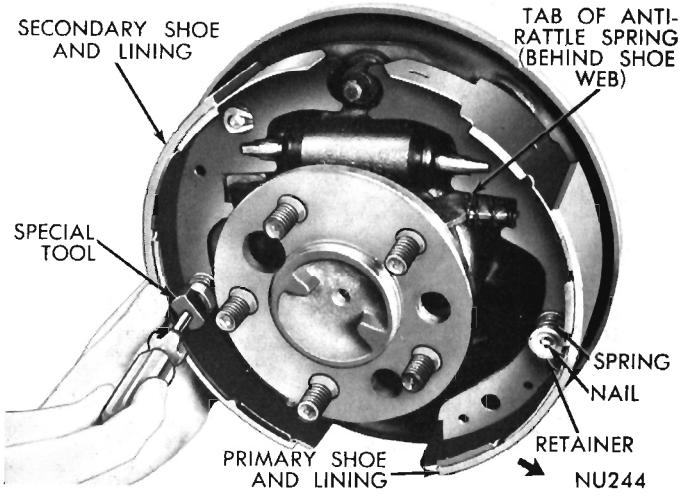

Fig. 7—Removing or Installing Shoe Retainers, Springs and Nails (Right Rear)

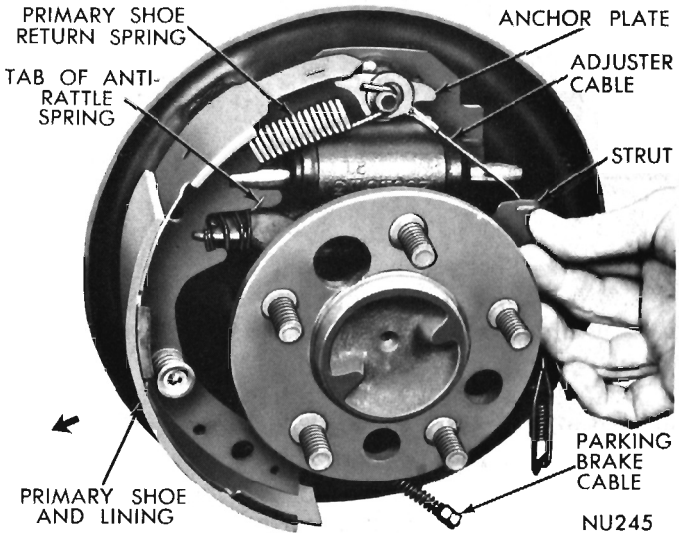

Fig. 8—Removing or Installing Parking Brake Strut and Spring (Left Rear)

(2) Install adjusting star wheel assembly between primary and secondary shoes, with a star wheel next to secondary shoe (Fig. 1). (The left star wheel adjusting stud end is stamped "L" which indicates its position on vehicle). The left side star wheel is cadmium plated. The right is black, and the adjusting stud end is **not** stamped.

(3) Install adjuster spring in primary shoe and hook other end in web of secondary. (Eleven inch brake only). Install adjusting lever spring over pivot pin on shoe web. Install adjusting lever under spring and over pivot pin. Slide lever slightly rearward to lock in position (Fig. 1).

(4) Spread anchor ends of brake shoe to hold star adjusting wheel assembly in position.

(5) Holding brake shoes firmly, place assembly on support plate, and at the same time engage shoe webs with push rods. (If so equipped). (Fig. 9).

(6) Using Tool C-4070, install shoe retaining nails, springs and retainers. (Fig. 5).

(7) Install anchor plate over anchor.

(8) Slide "eye" of adjusting cable over anchor and against anchor plate. Engage end of primary shoe return spring in shoe web and install other end over anchor, using Tool C-3785.

(9) Install cable guide in secondary shoe web. Holding in position, engage secondary shoe return spring through guide and into web. Install other end over anchor, using Tool C-3785. (Be sure cable guide remains flat against shoe web, and that secondary spring overlaps primary). (Fig. 1). Using pliers, squeeze ends of spring loops (around anchor) until parallel.

(10) Thread adjuster cable over guide and hook end of overload spring in lever (Fig. 1). (Be sure "eye" of cable is pulled tight against anchor and in a straight line with guide).

Installing Rear Brake Shoes

Lubricate shoe tab contact area (6 places) on support plate with Chrysler support plate lubricant, Part number 2932524 or equivalent (Fig. 11).

(1) Install parking brake lever on inner side of secondary shoe web after lubricating pivot with support plate lubricant. Secure with wave washer and horseshoe clip.

(2) Engage parking brake lever with cable, then slide secondary shoe against support plate, and at the same time engage shoe web with push rod, (if so equipped) and against anchor.

(3) Slide parking brake strut behind hub and into slot in parking brake lever. Slide anti-rattle spring over free end of strut. (Fig. 8). On ten inch brakes, be sure spring tab is pointing rearward and up on outside of shoe web (Left Brake), and pointing frontward and down behind shoe web (Right Brake) (Fig. 8). On eleven inch brakes, be sure spring tab is pointing forward and down and outside of shoe web (Left Brake), and pointing frontward and down behind shoe web (Right Brake) (Fig. 3).

(4) Slide primary shoe into position and engage with push rod (if so equipped) and free end of strut. Install anchor plate over anchor, then install eye of adjuster cable over anchor. (Fig. 10).

(5) Engage primary shoe return spring in web of shoe and install free end over anchor, using Tool C-3785. (Fig. 6).

(6) Install cable guide in secondary shoe web. Holding in position, engage secondary shoe return spring through guide and into web. Install other end over anchor, using Tool C-3785. (Be sure cable guide remains flat against shoe web and that secondary spring overlaps primary). (Fig. 1). Using pliers, squeeze ends of spring loops (around anchor) until parallel.

(7) Install adjusting star wheel assembly between primary and secondary shoes, with star wheel next to secondary shoe. (Fig. 1). The left star wheel adjusting stud end is stamped "L" which indicates its position

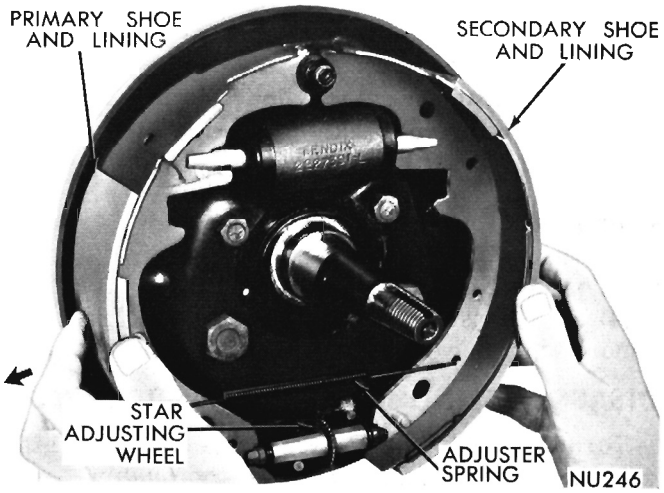

Fig. 9—Installing Brake Shoes (Left Front)

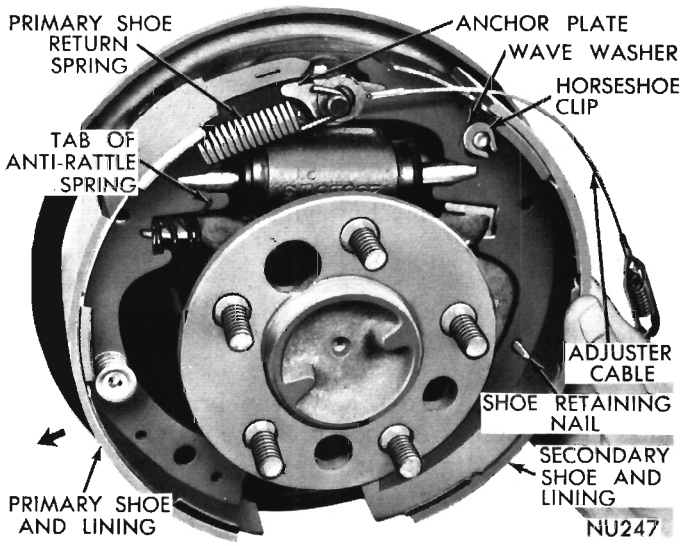

Fig. 10—Installing Brake Shoes (Left Rear)

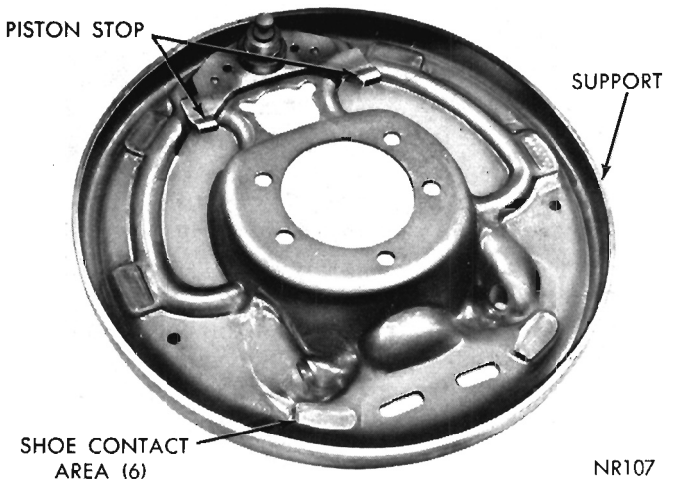

Fig. 11—Shoe Contact Area on Support

on vehicle. The left side star wheel is cadmium plated. The right is black, and the adjusting stud end is **not** stamped. Install adjuster spring between shoes (Fig. 1). (Engage primary shoe first). (Eleven inch brake only).

(8) Install adjusting lever spring over pivot pin on shoe web. Install adjusting lever under spring and over pivot pin. Slide lever slightly rearward to lock in position.

(9) Using Tool C-4070, install shoe retaining nails retainers and springs. (Fig. 7).

(10) Thread adjuster cable over guide and hook end of overload spring in lever. (Fig. 1). (Be sure eye of cable is pulled tight against anchor and in a straight line with guide).

Installing Front Brake Drums

(1) Lubricate wheel bearings and install brake drum and adjust wheel bearing to proper preload.

(2) Adjust brakes as described under "Service Procedures" at front of this Section.

Installing Rear Brake Drums

(1) Install brake drum and retaining clips. Install wheel and tire assembly.

(2) Adjust brakes as described under "Service Procedures" at front of this Section.

MASTER CYLINDER

(Drum Brakes)

INDEX

	Page
Bleeding Master Cylinder	12
Cleaning and Inspection	11
Disassembling Master Cylinder	10
General Information	10
Hydraulic System Safety Switch	13
Installing Master Cylinder	12
Master Cylinder Removal	10
Reassembling Master Cylinder	11
Testing Master Cylinder	13

GENERAL INFORMATION

The tandem master cylinder (Fig. 1) is of the compensating type with the reservoirs cast integrally. The master cylinder consists of a front and rear piston (in tandem) two outlets, each contain a residual pressure valve and spring (Fig. 4).

The **front** outlet tube from the master cylinder is connected to the hydraulic system safety switch (Figs. 8 and 9) and thence to the **rear** brakes. The **rear** outlet tube from the master cylinder is also connected to the safety switch and the **front** brakes.

The master cylinder used on vehicles not equipped with power brake units is serviced in the same manner as the master cylinder with power brakes, with one exception, the master cylinder for power brakes does not include the push rod.

The disc brake master cylinder is different than the standard drum brake master cylinder and is covered in the disc brake section of the brake group.

SERVICE PROCEDURES

MASTER CYLINDER REMOVAL

(1) Disconnect front and rear brake tubes from master cylinder (residual pressure valves will keep cylinder from draining).

(2) Remove nuts that attach master cylinder to cowl panel and/or power brake unit (if so equipped).

(3) Disconnect pedal push rod (manual brakes) from brake pedal.

(4) Slide master cylinder straight out from cowl panel and/or power brake unit (if so equipped).

DISASSEMBLING MASTER CYLINDER

To disassemble the master cylinder, (Figs. 1 and 4) clean outside of master cylinder thoroughly.

(1) Remove cover retaining bolt, and clamp then

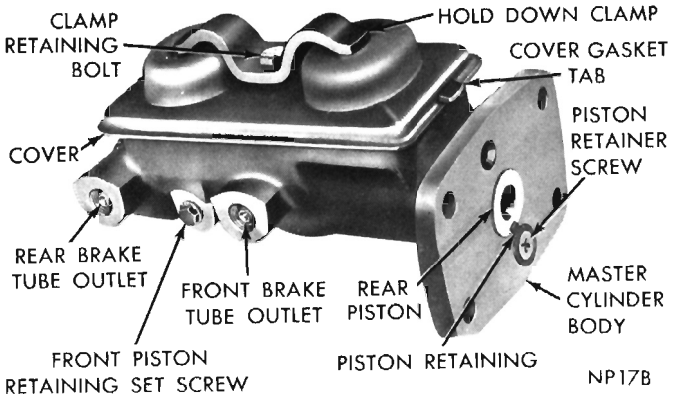

Fig. 1—Tandem Master Cylinder Assembly

remove cover and gasket. Empty brake fluid from reservoirs.

(2) Loosen piston retainer screw then press in on rear piston and flip retainer up to release rear piston assembly (Fig. 3). Slide rear piston assembly out of cylinder bore.

(3) Remove screw and gasket that retains front piston; then, upending master cylinder, tamp (open end down) on bench to remove front piston. **If front piston sticks in bore of cylinder, use air pressure to force piston out of cylinder. New cups must be installed at reassembly if air pressure is used.**

(4) Remove front piston compression spring from bore.

(5) Remove rubber cups from pistons, after noting position of cup lips. **Do not remove the primary cup of the rear piston. If cup is damaged or worn, install a new rear piston assembly.**

(6) Using Tool T109-178 (or an easy out) remove tube seats by threading tool firmly into seat, tap tool and seat out of cylinder body. (Fig. 2).

(7) Remove two residual pressure valves and springs (Fig. 3).

CLEANING AND INSPECTION

Clean master cylinder thoroughly, using a suitable solvent and dry with compressed air. Wash the cylinder bore with clean brake fluid and inspect for scoring or pitting. Master cylinder bore walls that have light scratches or show signs of corrosion, can usually be cleaned with crocus cloth. However, cylinder bores that have deep scratches or scoring may be honed, providing diameter of bore is not increased more than .002 inch. If master cylinder bore does not clean up at .002 inch when honed, the master cylinder should be discarded and a new master cylinder installed.

If master cylinder pistons are badly scored or corroded, replace them with new ones. The piston cups and seals should be replaced when reconditioning a master cylinder.

When overhauling a master cylinder, use all parts furnished in repair kit. **Discard all used rubber parts.**

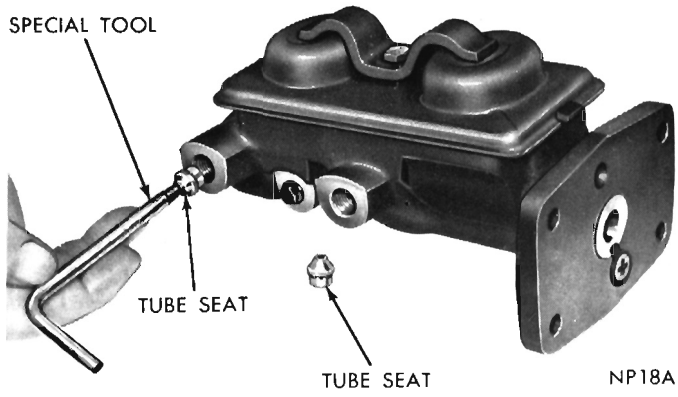

Fig. 2—Removing Tube Seats

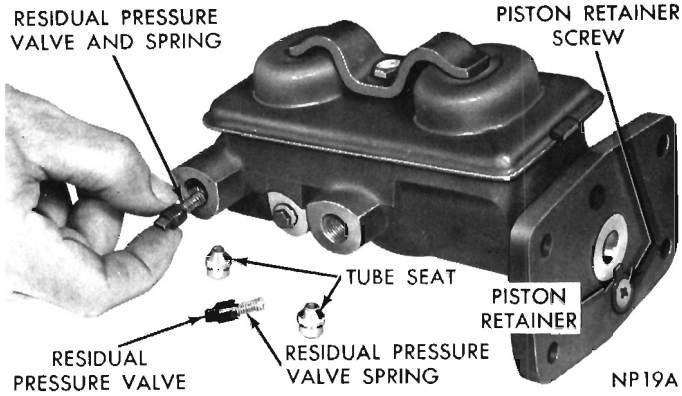

Fig. 3—Removing or Installing Residual Pressure Valves

REASSEMBLING MASTER CYLINDER

Front Piston

Before assembling the master cylinder, dip all component parts in clean brake fluid and place on a clean shop towel or paper (assembling seals dry, can ruin them).

(1) Carefully work primary cup on end of front piston with the lip away from piston (Fig. 4).

(2) Slide "O" ring over the rear end of front piston and into correct land.

(3) Carefully work front piston secondary cup (Fig. 4) into rear land, with the cup lip away from piston.

(4) Slide cup retainer over front end of piston, followed by piston spring (Fig. 4).

(5) Install piston spring, piston cup retainer, piston and cups into bore of master cylinder (Fig. 5). **Be sure the lip of cups enter bore evenly in order not to damage sealing qualities of cups. (Keep well lubricated with brake fluid.)**

Rear Piston

(1) Carefully work secondary cup over rear end of rear piston with lip of cup toward piston (Fig. 4).

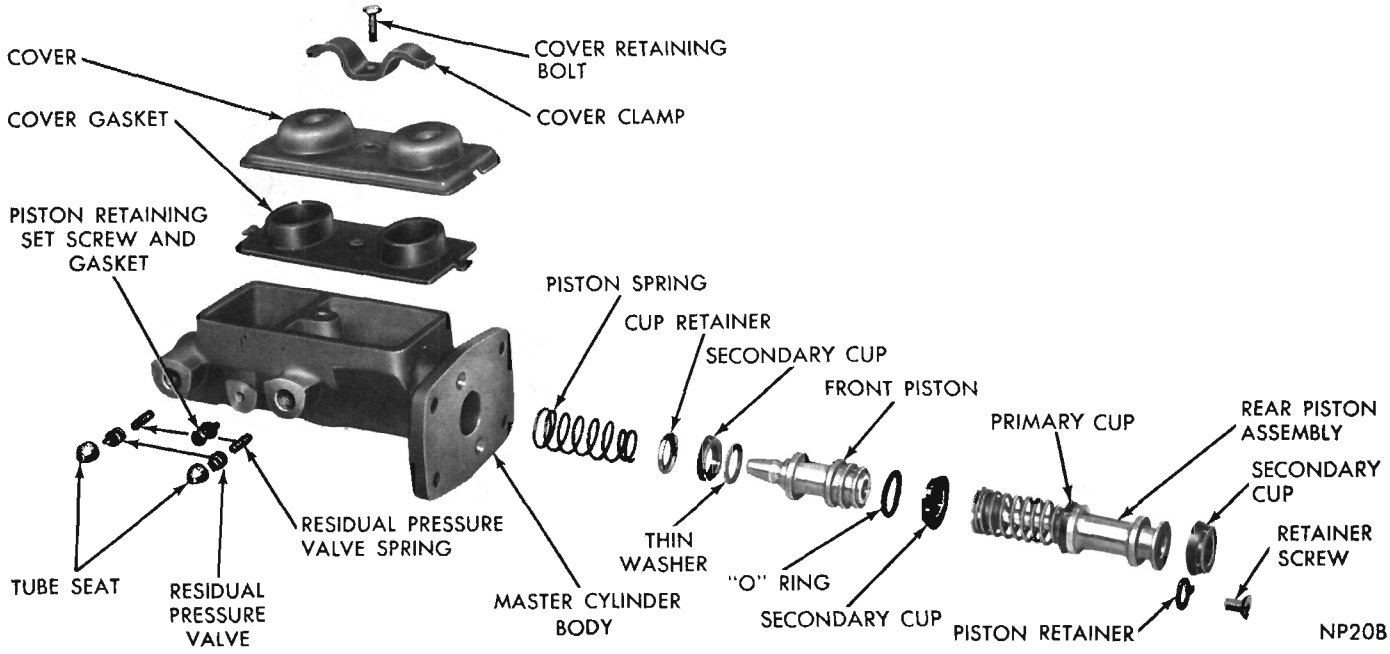

Fig. 4—Tandem Master Cylinder (Exploded View)

(2) Center spring retainer of rear piston assembly over shoulder of front piston. Push piston assemblies into bore up to center piston cup. Carefully work cup into bore than push piston in up to the rear cup. Carefully work lip of rear cup into bore, then push in on piston until seated (Fig. 6).

(3) Holding piston in seated position, move piston retainer over piston and tighten screw securely.

(4) Install front piston retaining set screw and gasket in cylinder body and tighten securely (Fig. 1).

(5) Install residual pressure valves and springs in outlet ports and install tube seats, firmly.

BLEEDING MASTER CYLINDER

Before installing the master cylinder on vehicle, it must be bled on the bench as follows:

(1) Clamp master cylinder in a vise and attach bleeding tubes Tool C-4029 (Fig. 7).

(2) Fill both reservoirs with approved brake fluid.

(3) Using a wooden stick or dowel (power brake equipped vehicles) or depress push rod slowly and allow the pistons to return under pressure of springs. Do this several times until all air bubbles are expelled. (Fig. 7).

(4) Remove bleeding tubes from cylinder and install cover and gasket. (As tubes are removed, fluid remaining in tubes will syphon out.)

(5) Install cover retaining clamp and clamp screw.

(6) Remove from vise and install master cylinder on vehicle as follows:

INSTALLING MASTER CYLINDER

(1) Install master cylinder on vehicle, aligning push rod with cowl panel opening (manual brakes) or power brake push rod with cylinder piston.

(2) Slide over mounting studs. Install attaching nuts and tighten to 9 foot-pounds. Connect push rod to brake pedal.

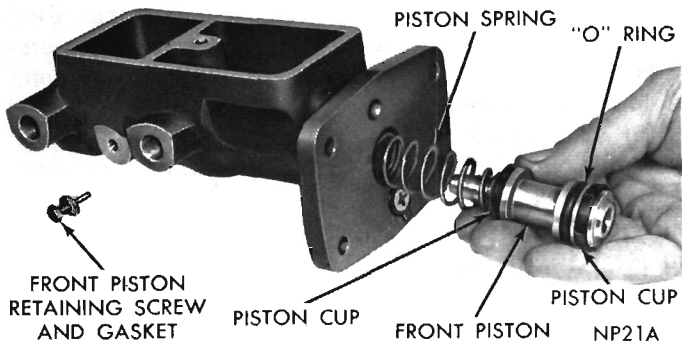

Fig. 5—Installing Front Piston and Spring

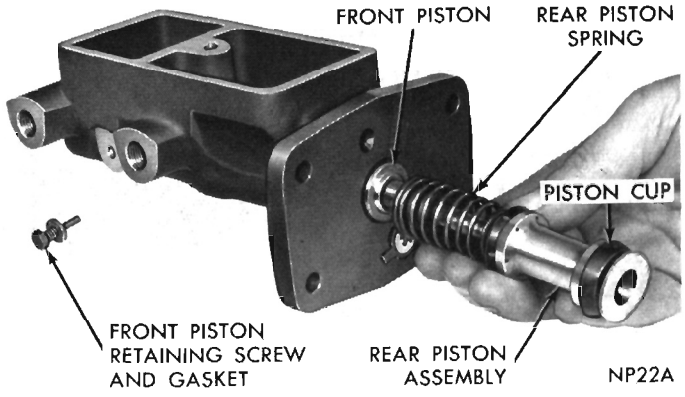

Fig. 6—Installing Rear Piston Assembly

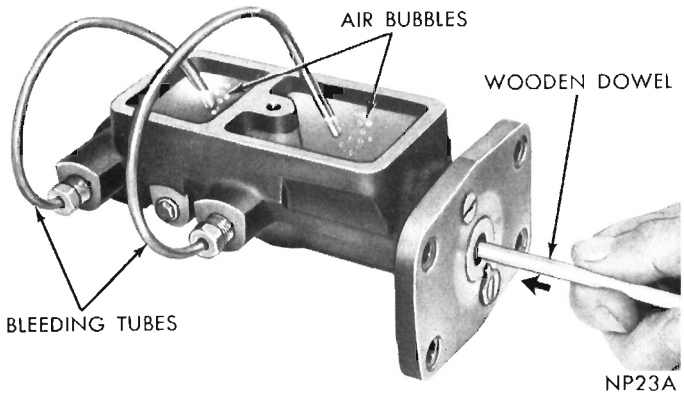

Fig. 7—Bleeding Master Cylinder

(3) Connect front and rear brake tubes and tighten to 150 inch-pounds.

(4) Bleed brakes at wheel cylinders using regular procedure. Be sure fluid level is maintained. (See Bleeding the Brake System.)

TESTING MASTER CYLINDER

Be sure that the master cylinder compensates at both ports. This can be done by applying the pedal lightly with the engine running (power brakes) and observing for a gyser of fluid squirting up in the reservoirs. This may only occur in the front chamber and so to determine if the rear compensating port is open, it will be necessary to pump up the brakes rapidly and, then, hold the pedal down. Have an observer watch the fluid in the rear reservoir while the pedal is raised. A disturbance in the fluid indicates that the compensating port is open.

HYDRAULIC SYSTEM SAFETY SWITCH

The hydraulic system safety switch (Figs. 8 and 9) is used to warn the vehicle operator that one of the hydraulic systems has failed. A failure in one part of the brake system does not result in failure of the entire hydraulic brake system. As an example, failure of the rear brake system will leave the front brake system still operative.

As pressure falls in one system, the other system's normal pressure forces the piston to the inoperative side contacting the switch terminal, causing a red warning light to come on in the instrument panel, thus, warning the operator of the vehicle that one of the systems has failed and should be repaired.

The safety switch is mounted on the frame in a vertical position, with the brake tubes connected. (Fig. 8).

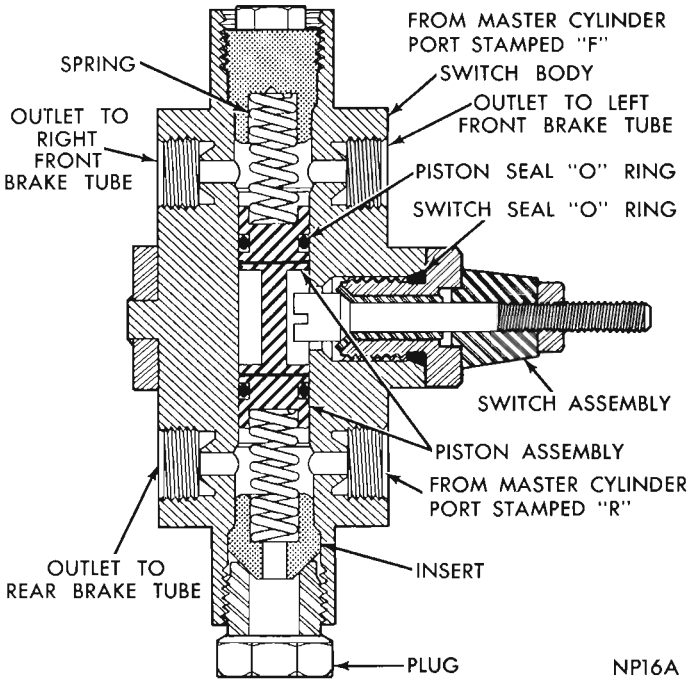

Fig. 8—Hydraulic System Safety Switch (Sectional)

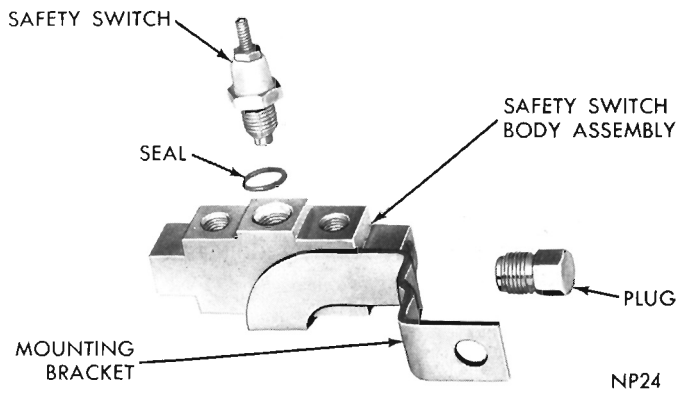

Fig. 9—Hydraulic System Safety Switch (Exploded View)

If a malfunction occurs within the switch, disconnect tubes from body assembly and install a new assembly. The component parts of the switch body are not serviced. However, the terminal unit can be removed if a malfunction occurs and a new terminal unit installed.

If a new body is installed, bleed the brake system.

WHEEL CYLINDERS

INDEX

	Page		Page
Assembling Wheel Cylinders	14	Installing Wheel Cylinders	15
Disassembling Wheel Cylinders	14	Removing Brake Supports	15
Installing Brake Supports	16	Removing Wheel Cylinders	14

GENERAL INFORMATION

On all new model vehicles, a piston stop (Fig. 4) is welded to the support plates to prevent the pistons from moving out far enough to lose brake fluid. The piston boots are of the press-on type and prevents moisture from entering the wheel cylinder.

To perform service operations or inspections of the wheel cylinders, it will be necessary to remove the cylinders from the support plate and disassemble on the bench.

REMOVING WHEEL CYLINDERS

Front or Rear

With all the brake drums removed, inspect the wheel cylinder boots for evidence of a brake fluid leak. Visually check the boots for cuts, tears, or heat cracks, and if any of these conditions exist, the wheel cylinders should be completely cleaned, inspected and new parts installed. (A slight amount of fluid on the boot may not be a leak, but may be preservative oil used at assembly.

(1) In case of a leak, remove brake shoes, (replace if soaked with grease or brake fluid.)

(2) Disconnect brake hose from brake tube at frame bracket (front wheels) or disconnect brake tube from wheel cylinder (rear wheels).

(3) Disconnect brake hose from wheel cylinder (front). Remove wheel cylinder attaching bolts (front or rear), then slide wheel cylinder assembly out of support.

DISASSEMBLING WHEEL CYLINDERS

Front or Rear (Figs. 1 or 2)

(1) Using a suitable tool, pry boots away from cylinders and remove. Remove push rods (if so equipped).

(2) Press in on one piston and force out piston, cup, spring cup and piston.

(3) Wash wheel cylinder, pistons and spring in a suitable solvent; clean thoroughly and dry with air. Inspect cylinder bore and piston for scoring or pitting. (Do not use a rag as lint from the rag will adhere to bore surfaces.)

Wheel cylinder bores and pistons that are badly scored or pitted should be replaced. Cylinder walls that have light scratches, or show signs of corrosion, can usually be cleaned with crocus cloth, using a circular motion. Black stains on the cylinder walls are caused by piston cups and will do no harm.

ASSEMBLING WHEEL CYLINDERS

Front or Rear (Figs. 1 or 2)

Before assembling the pistons and new cups in the wheel cylinders, dip them in clean brake fluid. If the boots are deteriorated, cracked or do not fit tightly on the push rods (if so equipped) or shoe tang, as well as the cylinder casting, new boots must be installed.

(1) Wash wheel cylinder with alcohol and blow dry with compressed air. Coat cylinder bore with clean brake fluid.

(2) Install expansion spring in cylinder. Install cups in each end of cylinder with open end of cups facing each other.

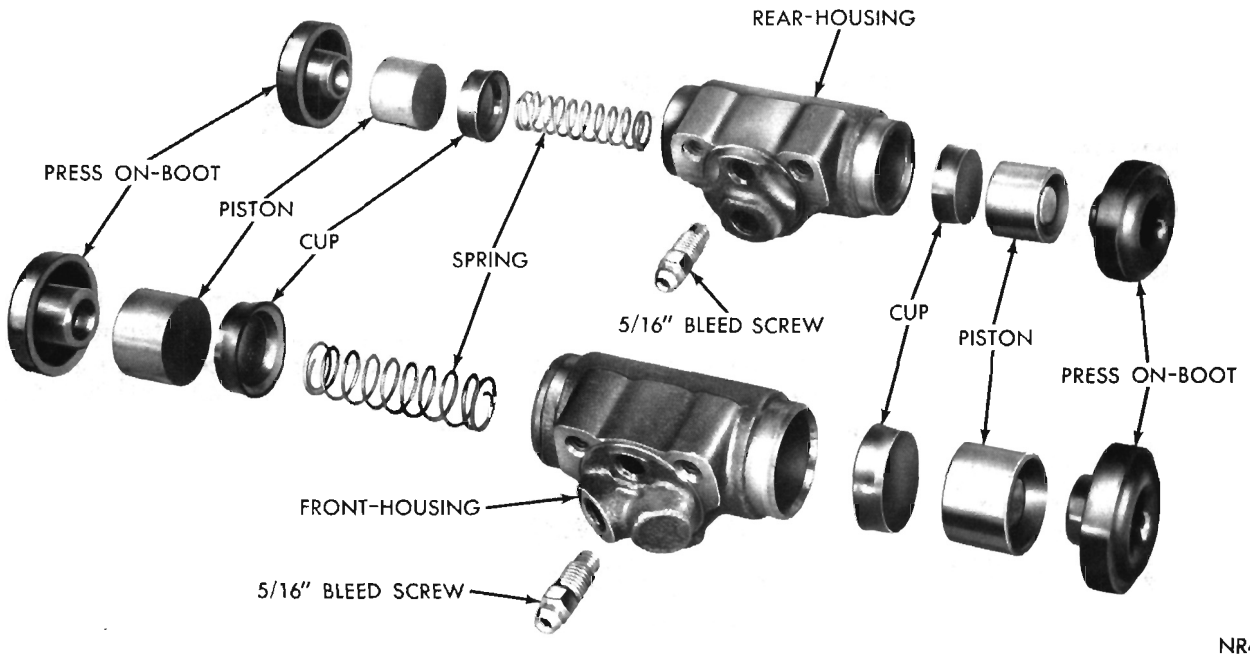

Fig. 1—Wheel Cylinders 9 Inch Brake (Front & Rear)

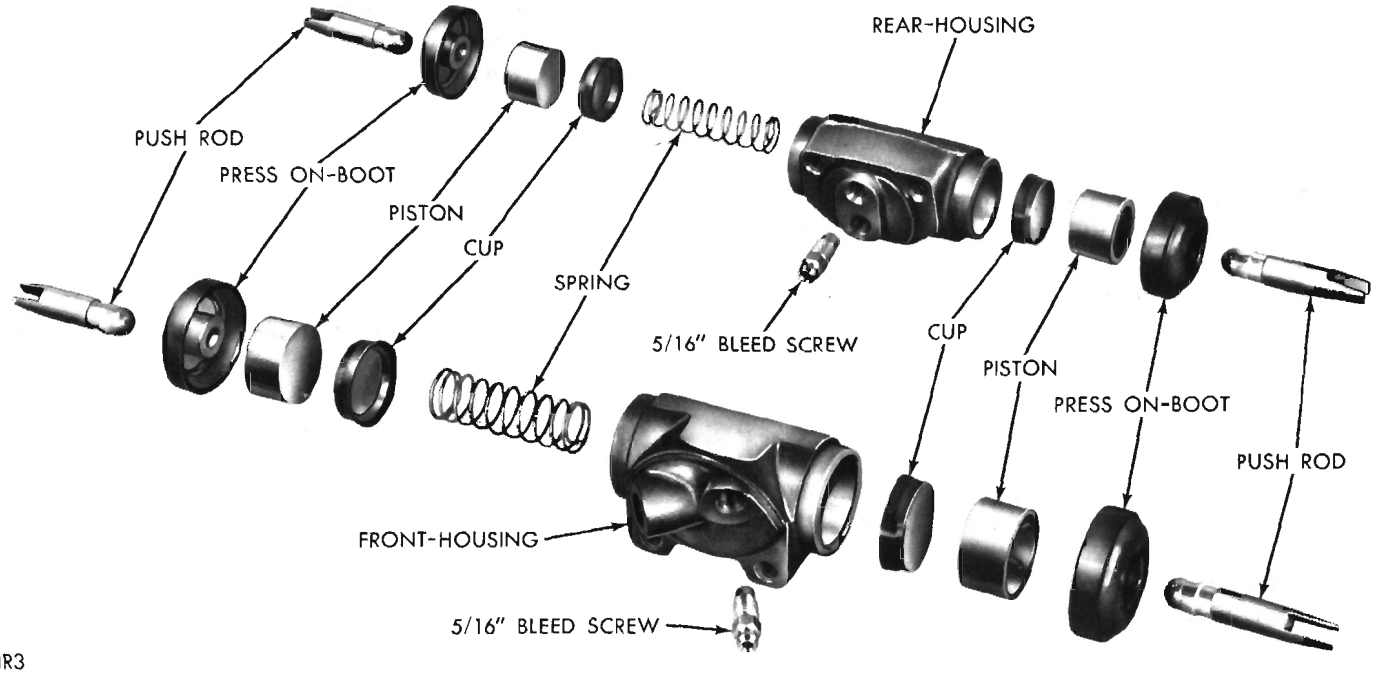

Fig. 2—Wheel Cylinders 10 and 11 Inch Brake (Front and Rear)

(3) Install pistons in each end of cylinder with recessed end of pistons facing open ends of cylinder.

(4) Install boots over ends of cylinder and press over ends until boot is seated against cylinder shoulder. **Use care not to damage boot.**

INSTALLING WHEEL CYLINDERS

Front or Rear

(1) Slide wheel cylinder into position on support (front or rear). Install attaching bolts and tighten from 7 to 10 foot pounds (9 inch brakes) or 17 to 20 foot pounds (10 and 11 inch brakes).

(2) Connect brake tube to rear wheel cylinder and tighten to 95 foot pounds. Connect brake hose to front wheel cylinder, using a new gasket. Tighten to 25 foot pounds, before attaching brake hose to frame bracket. **Should hose be connected to wheel cylinder last, tightening of the hose into wheel cylinder will twist hose, and can result in suspension or tire interference.**

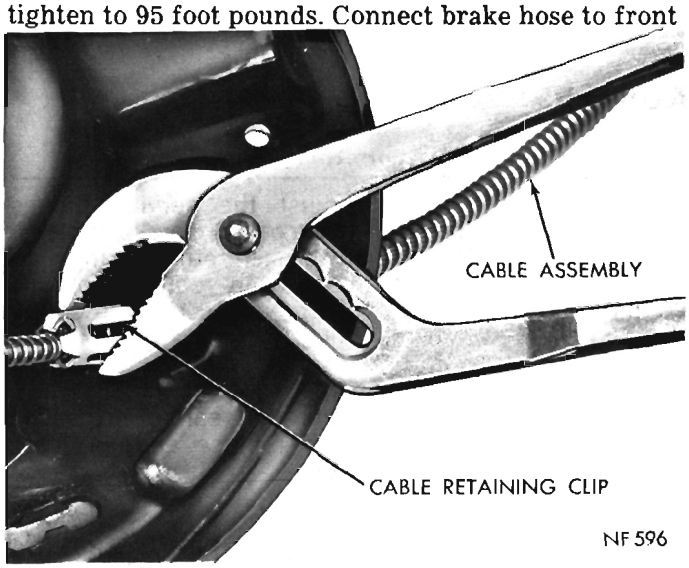

Fig. 3—Removing Brake Cable from Support

REMOVING BRAKE SUPPORT

(Front)

(1) Disconnect brake line from brake hose at frame bracket.

(2) With wheel and brake drum removed, remove four support attaching nuts and washers.

(3) Remove support and brake assembly from spindle.

(Rear)

(1) With wheel and brake drum removed, remove

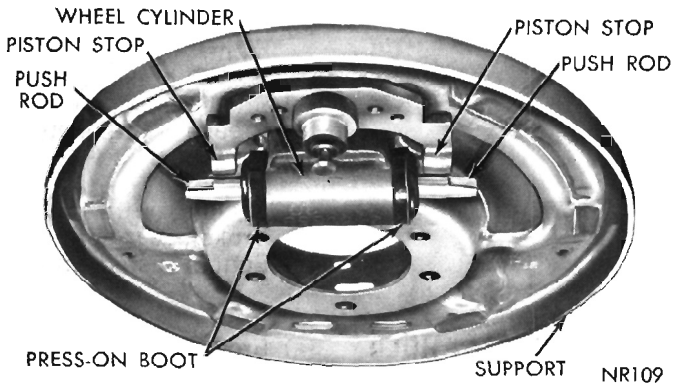

Fig. 4—Wheel Cylinder Piston Stops

support attaching nuts and washers.

(2) Remove rear axle shaft and retainer.

(3) Disconnect hydraulic brake line from wheel cylinder.

(4) Disengage brake cable from parking brake lever.

(5) Using a suitable tool compress three flared legs of cable retainer and pull brake cable out of support (Fig. 3).

(6) Remove brake support from rear axle housing.

INSTALLING BRAKE SUPPORT

(Front)

(1) Install brake shoes on support.

(2) Place support on spindle support and install attaching bolts, nuts and washers. Tighten attaching nuts to 55 foot-pounds.

(3) Connect brake hose to wheel cylinder and tighten to 25 foot-pounds, before connecting brake hose to frame bracket. **Should hose be connected to wheel cylinder last, tightening of hose into wheel cylinder will twist hose, which can result in suspension or tire interference problems.**

(4) Install brake drum and wheel bearings. Adjust bearings. Bleed and adjust brakes.

(Rear)

(1) Install brake shoes on support.

(2) Install support onto rear axle housing.

(3) Insert rear axle shaft and retainer into housing and install axle retainer nuts and washers. Tighten retainer nuts to 35 foot-pounds.

(4) Attach brake line to wheel cylinder and tighten to 95 inch-pounds.

(5) Insert parking brake cable into support plate and attach cable to parking brake lever.

(6) Install brake drum and wheel. Bleed and adjust brakes.

PARKING BRAKES

INDEX

	Page		Page
Adusting Parking Brake	17	Removing Front Parking Brake Cable	18
General Information	16	Removing Rear Parking Brake Cable	17
Installing Front Parking Brake Cable	18	Service Diagnosis	16
Installing Rear Parking Brake Cable	17		

GENERAL INFORMATION

The rear wheel service brakes also act as parking brakes. The brake shoes are mechanically operated by a lever and strut connected to a flexible steel cable. The wheel brake cables are joined together by a forward brake cable and equalizer extending to the parking brake pedal or release handle (Figs. 1, 2, 3 and 4).

SERVICE DIAGNOSIS

Condition	Possible Cause	Correction
DRAGGING BRAKE	(a) Improper cable or brake shoe adjustment.	(a) Properly adjust the service brakes then adjust the parking brake cable.
	(b) Broken brake shoe return spring.	(b) Replace any broken return spring.
	(c) Broken brake shoe retainer spring.	(c) Replace the broken retainer spring.
	(d) Grease or brake fluid soaked lining.	(d) Replace the grease seal or recondition the wheel cylinders and replace both brake shoes.
	(e) Sticking or frozen brake cable.	(e) Replace cable.
	(f) Broken rear spring.	(f) Replace the broken rear spring.
	(g) Bent or rusted cable equalizer.	(g) Straighten, or replace and lubricate the equalizer.
BRAKE WILL NOT HOLD	(a) Broken or rusted brake cable.	(a) Replace cable.
	(b) Improperly adjusted brake or cable.	(b) Adjust brakes and cable as necessary.
	(c) Soaked brake lining.	(c) Replace the brake lining.
	(d) Ratchet or pedal mechanism worn.	(d) Replace pedal assembly.

SERVICE PROCEDURES

ADJUSTING PARKING BRAKE

The service brakes must be properly adjusted before adjusting the parking brake.

(1) Release parking brake lever and loosen cable adjusting nut to insure cable is slack, (Figs. 1 or 2). Before loosening cable adjusting nut, clean threads with wire brush and lubricate with grease.

(2) Tighten cable adjusting nut until a slight drag is felt while rotating wheel, loosen cable adjusting nut until both rear wheels can be rotated freely, then back off cable adjusting nut two full turns.

(3) Apply parking brake several times, then release and test to see that rear wheels rotate freely without dragging.

REMOVING REAR PARKING BRAKE CABLE

The independent rear brake cables are attached to an equalizer (Fig. 1). The front cable is adjusted at the equalizer.

Should it become necessary to remove the parking brake cable (rear) for installation of a new cable, see (Fig. 3) Service Brakes.

(1) With vehicle jacked up or on a suitable hoist, remove rear wheels.

(2) Disconnect brake cable from equalizer.

(3) Remove retaining clip from brake cable bracket.

(4) Remove brake drum from rear axle.

(5) Remove brake shoe return springs.

(6) Remove brake shoe retaining springs.

(7) Remove brake shoe strut and spring from brake support and disconnect brake cable from operating arm.

(8) Compress retainers on end of brake cable housing and remove cable from support. (Fig. 3) Service Brakes.

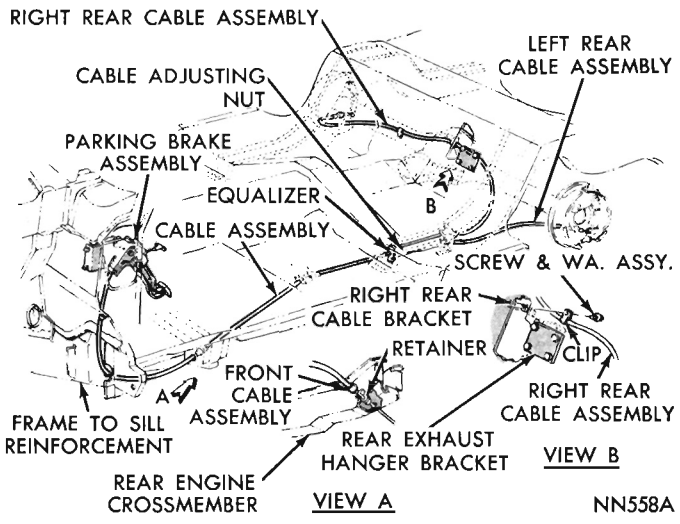

Fig. 1—Parking Brake Cable Routing (Plymouth)

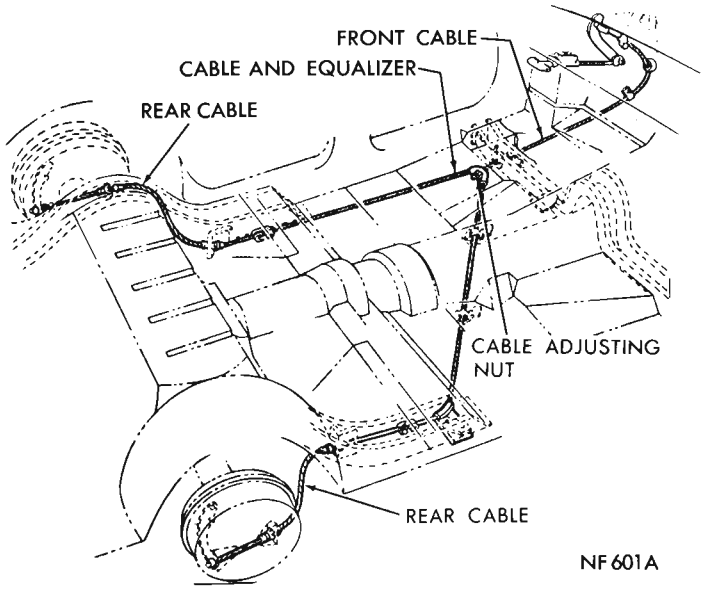

Fig. 2—Parking Brake Cable Routing (Valiant)

INSTALLING REAR PARKING BRAKE CABLE

When installing a new brake cable, lubricate the cable with short fibre grease at the contact points.

(1) Insert brake cable and housing into brake support plate making certain that housing retainers lock the housing firmly into place.

(2) Holding brake shoes in place on support plate, engage brake cable into brake shoe operating lever. Install parking brake strut and spring.

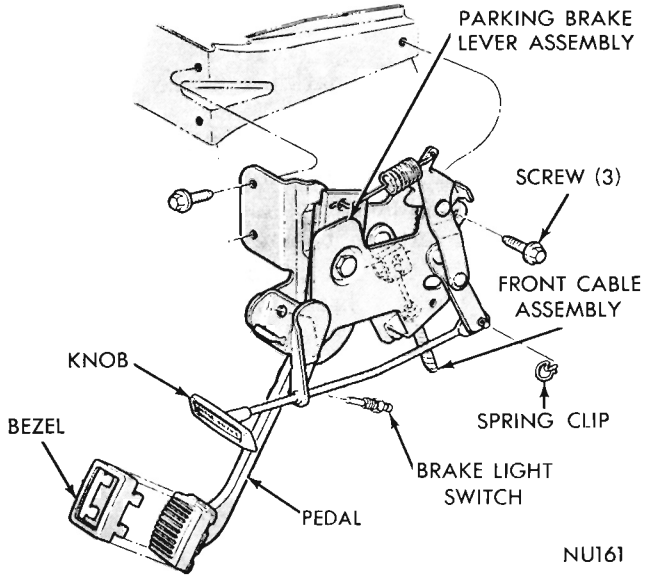

Fig. 3—Parking Brake Pedal (Plymouth)

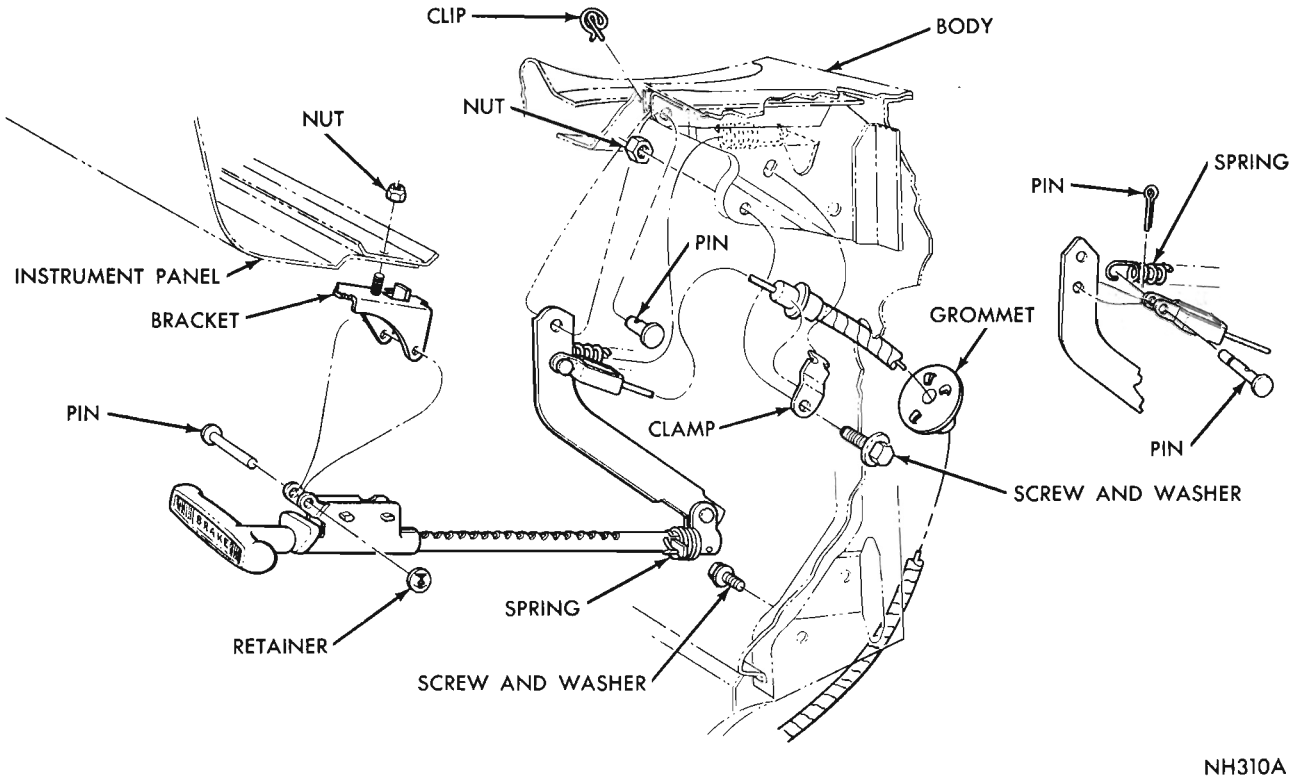

Fig. 4—Parking Brake Lever (Valiant)

(3) Install brake shoe retaining springs, and brake shoe return springs.

(4) Install brake drum and wheel.

(5) Insert brake cable and housing into cable bracket and install retaining clip.

(6) Insert brake cable into equalizer. Note different size slot for corresponding cable end fitting.

(7) Adjust service brakes and parking brake cable.

REMOVING FRONT PARKING BRAKE CABLE

(1) Disengage front parking brake cable from equalizer bar (Figs. 1 or 2).

(2) Disengage cable from guide clip.

(3) Using a screw driver force cable housing and attaching clip out of body crossmember.

(4) Fold back left front edge of floor mat and remove rubber cable cover from floor pan.

(5) **Depress** parking brake pedal and work brake cable up and out of brake pedal linkage, (Figs. 3 or 4).

(6) Using a screw driver force upper end of cable housing and clip down out of pedal assembly bracket.

(7) Remove cable to floor pan clip and work cable and housing assembly up through floor pan.

INSTALLING FRONT PARKING BRAKE CABLE

(1) Insert rear end of brake cable and housing down through cable routing hole in floor pan.

(2) Engage upper end of cable and housing assembly up through pedal assembly bracket and firmly attach housing and clip into bracket.

(3) Depress parking brake pedal and insert end of cable into parking brake pedal clevis.

(4) Insert cable through body crossmember and firmly press into housing and attaching clip.

(5) Attach front cable to equalizer bar.

(6) Adjust service brakes and parking brake cable.

(7) Apply brakes several times and test for free wheel rotation when parking brake is in "off" position.

MIDLAND-ROSS POWER BRAKE
(Tandem Diaphragm)

INDEX

	Page		Page
Installing Power Brake	19	Service Diagnosis	20
Removing Power Brake	19		

GENERAL INFORMATION

The tandem diaphragm power brake (Fig. 1) is a vacuum unit which utilizes engine intake manifold vacuum and atmospheric pressure to provide power assisted application of the vehicle brakes. The power unit provides lighter pedal pressure.

This lighter pressure is obtained in combination with a reduced pedal travel, which makes it possible to bring the pedal down to the approximate height of the accelerator pedal when at closed throttle condition. Thus, the driver, after closing the throttle, can shift his toe from one pedal to the other without lifting his heel from the floor.

The power brake, is a self contained unit, and mounts on the engine side of the cowl panel.

The power brake is externally connected to the brake system. The unit is connected by a pedal link to the brake pedal, by a vacuum line to the intake manifold (through a vacuum check valve) and hydraulic tubes from the master cylinder to the wheel units.

SERVICE PROCEDURES

REMOVING POWER BRAKE

(1) Remove nuts attaching master cylinder to brake unit. Remove master cylinder from unit.

(2) Disconnect vacuum hose from power brake check valve.

(3) Remove nut and bolt that attach power brake pedal link to pedal. (Under instrument panel.)

(4) Remove nuts and washers that attach power brake unit to dash panel.

(5) Remove power brake from vehicle.

INSTALLING POWER BRAKE ON VEHICLE

(1) Install new dash panel to power brake gasket.

(2) Position power brake unit on dash panel, then install attaching nuts and washers and tighten to 150 inch-pounds.

(3) Using lubriplate, coat the bearing surface of bolt that connects power brake pedal link with brake pedal linkage. Install bolt and nut. Tighten to 30 foot pounds.

(4) Connect vacuum hose to unit.

(5) Install master cylinder to front cover mounting studs and tighten nuts to 100 inch-pounds.

Be sure power brake output push rod is set to correct length. With power brake attached to dash panel and vacuum supplied to unit, the master cylinder should compensate (force jet fluid up through front chamber compensation port.)

(6) Check stop light operation.

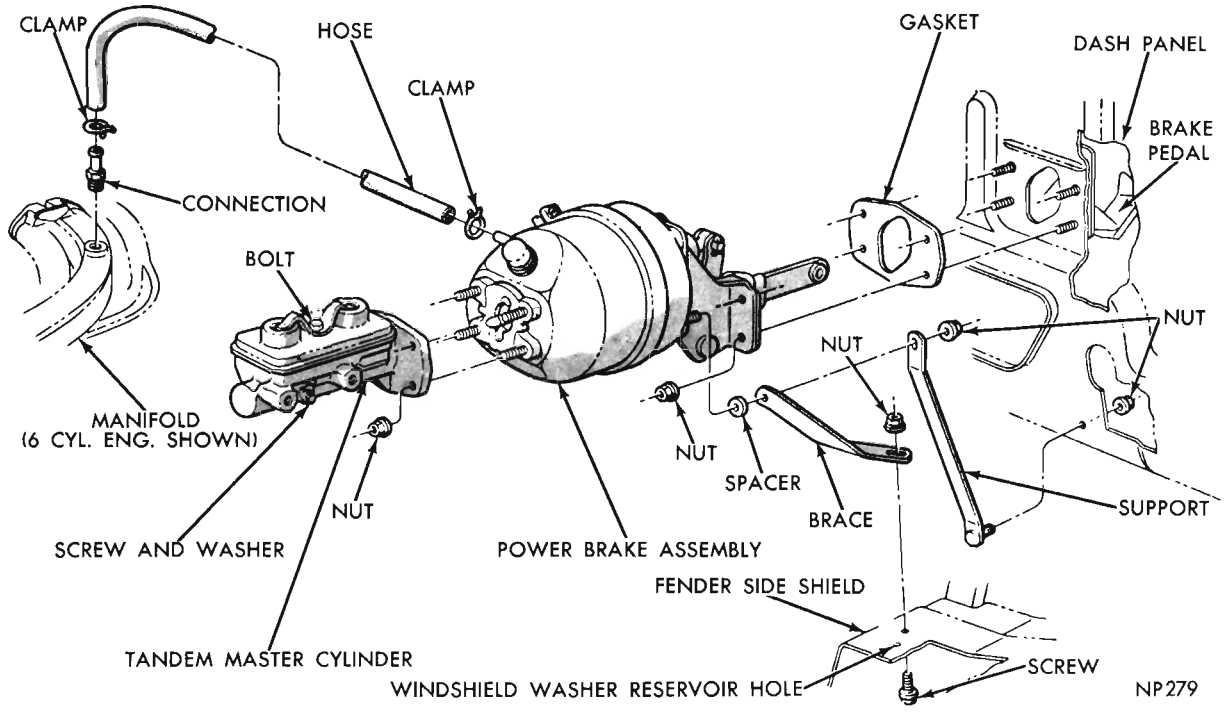

Fig. 1—Power Brake Assembly (Drum)

MIDLAND ROSS POWER BRAKE
(Single Diaphragm)

INDEX

	Page		Page
General Information	20	Removing Power Brake	20
Installing Power Brake	20	Service Diagnosis	20

GENERAL INFORMATION

The Midland Ross power brake, (Fig. 1) is located on the engine side of the dash panel. The front cover of the Power Brake Unit supports the master cylinder. The power brake derives its power from the intake manifold vacuum and atmospheric pressure. It does not require a vacuum reservoir.

SERVICE DIAGNOSIS

Condition	Possible Cause	Correction
DRAGGING BRAKES (ALL WHEELS)	(a) Brake shoes improperly adjusted.	(a) Adjust brakes.
	(b) Brake pedal linkage binding.	(b) Free up linkage.
	(c) Excessive hydraulic seal friction.	(c) Lubricate seal.
	(d) Compensator port plugged.	(d) Clean out master cylinder.
	(e) Improper booster push rod length adjustment.	(e) Adjust push rod.
	(f) Fluid cannot return to master cylinder.	(f) Inspect pedal return and push rod adjustment.
	(g) Parking brake not returning.	(g) Free up as required.
GRABBING BRAKES	(a) Grease or brake fluid on linings.	(a) Inspect for a leak and replace lining as required.
PEDAL GOES TO FLOOR (OR ALMOST TO FLOOR)	(a) Self-adjusters not operating.	(a) Inspect self-adjuster operations.
	(b) Air in hydraulic system.	(b) Bleed brakes.
	(c) Hydraulic leak.	(c) Locate and correct leak.
	(d) Fluid low in master cylinder.	(d) Add brake fluid.
	(e) Shoe hanging up on rough platform.	(e) Smooth and lubricate platforms.
HARD PEDAL (POWER UNIT TROUBLE)	(a) Faulty vacuum check valve.	(a) Replace check valve.
	(b) Collapsed or leaking vacuum hose.	(b) Replace hose.
	(c) Plugged vacuum fittings.	(c) Clean out fittings.
	(d) Leaking vacuum chamber.	(d) Replace unit.
	(e) Diaphragm assembly out of place in housing.	(e) Replace unit.
	(f) Vacuum leak in forward vacuum housing.	(f) Replace unit.

SERVICE PROCEDURES

REMOVING POWER BRAKE (Fig. 1)

(1) Remove nuts attaching master cylinder to brake unit. Remove master cylinder.

(2) Disconnect vacuum hose from power brake.

(3) From under instrument panel, remove nut and attaching bolt from power brake input push rod and brake pedal blade. On linkage type power brake unit, remove lower pivot retaining bolt. (Fig. 1).

(4) Remove four power brake attaching nuts and washers.

(5) Remove power brake, and linkage (if so equipped), from vehicle.

INSTALLING POWER BRAKE

(1) Install power brake assembly into dash and tighten attaching nuts 150 inch-pounds.

(2) Install master cylinder on power brake. Tighten mounting nuts to 100 inch-pounds. Be sure power brake output push rod is set to correct length (Fig. 2). With power brake attached to dash panel and vacuum supplied to unit, the master cylinder should compensate (force jet of fluid up through front chamber compensation port).

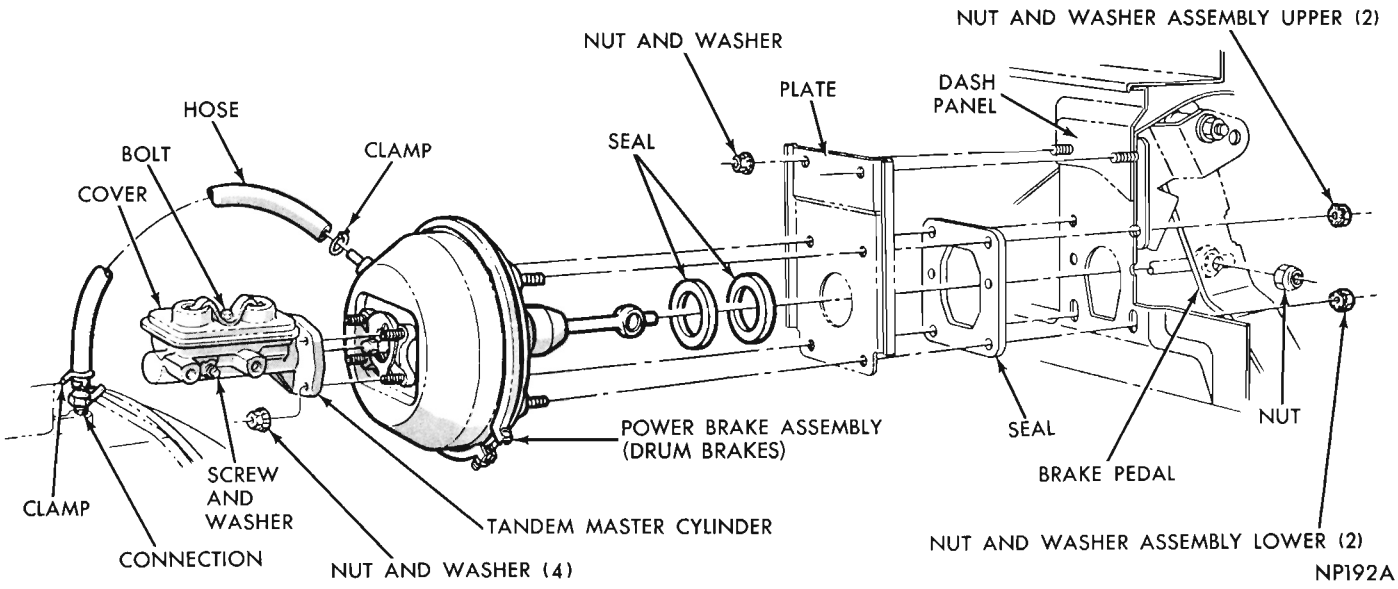

Fig. 1—Power Brake and Master Cylinder

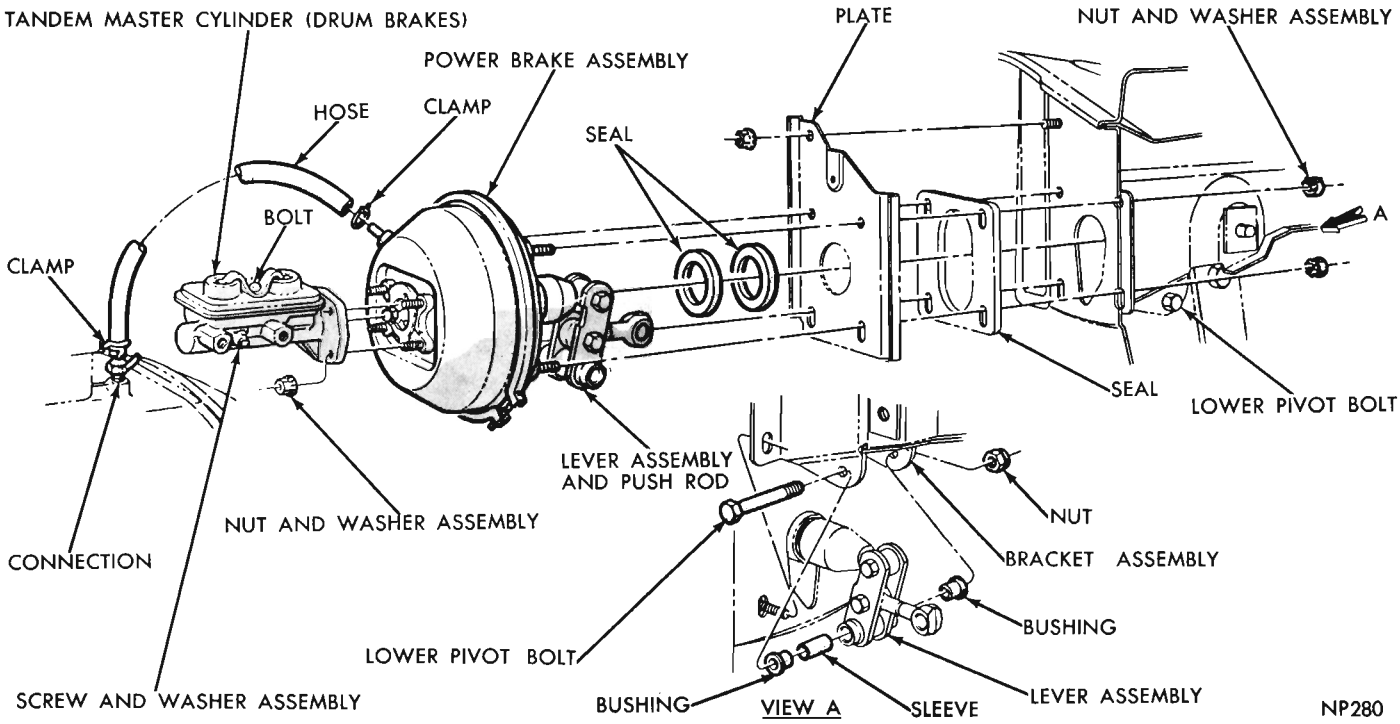

Fig. 1—Power Brake and Master Cylinder

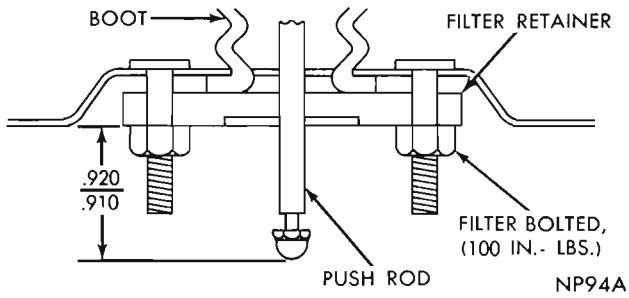

Fig. 2—Push Rod Measurement

(3) Connect vacuum hose.

(4) Using lubriplate, coat the bearing surface of bolt that connects power brake pedal link with brake pedal linkage. Install bolt and nut. Tighten to 30 foot pounds. Connect lower pivot bolt (if so equipped).

(5) Check stop light operation.

POWER BRAKE–BENDIX

(Single Diaphragm)

GENERAL INFORMATION

The single diaphragm type power brake (Fig. 1) is a self contained vacuum hydraulic power braking unit. It is of the vacuum suspended type which utilizes engine intake manifold vacuum and atmospheric pressure for its power. This type of unit does not require a vacuum reservoir.

The Bendix Power Brake Unit can be identified by the twist lock method of attaching the housing and cover together.

The basic elements of the vacuum unit are as follows:

A mechanically actuated control valve integral with the vacuum power diaphragms, controls the degree of power brake application or release in accordance with the foot pressure applied to the valve operating rod through the brake pedal linkage.

The control valve is of a single poppet type valve with the atmospheric port and a vacuum port. The vacuum port seat is a part of the valve body attached to the diaphragm assembly. The atmospheric port is a part of the valve plunger which moves within the valve housing and vacuum power diaphragm assembly.

A hydraulic master cylinder which contains all of the elements of the standard brake master cylinder except for the special hydraulic push rod which is a part of the power brake.

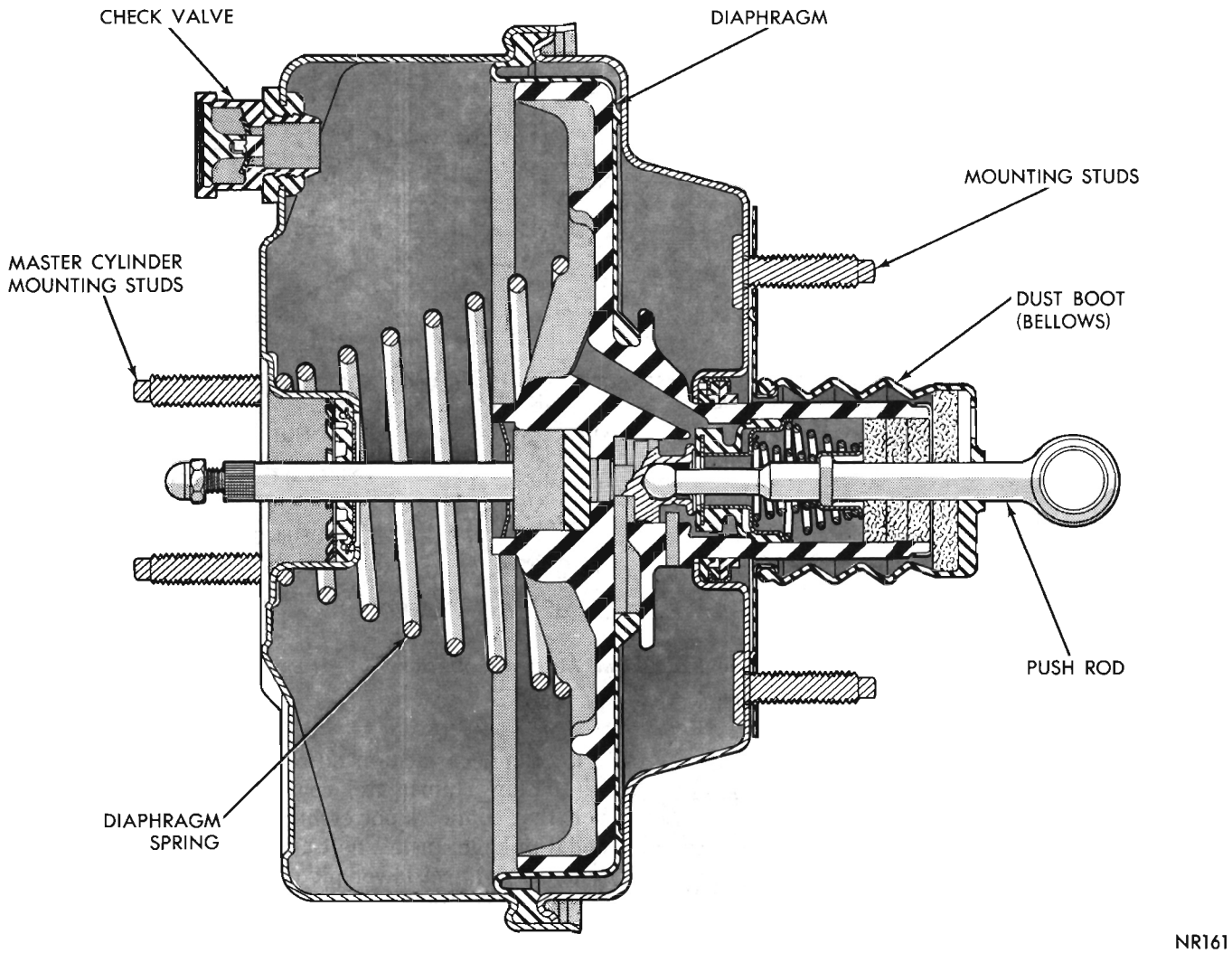

Fig. 1—Power Brakes Assembly (Bendix) Drum Type Brakes

SERVICE PROCEDURES

REMOVING POWER BRAKE

(1) Remove nuts attaching master cylinder to brake unit. Remove master cylinder from unit.

(2) Disconnect vacuum line from check valve.

(3) From under instrument panel, remove nut and bolt from power brake link and brake pedal. (On linkage type power brake, remove lower pivot bolt).

(4) From under instrument panel remove four brake unit attaching nuts and washers.

(5) Withdraw brake unit assembly from vehicle.

INSTALLING POWER BRAKE

(1) Install power brake and linkage assembly (if so equipped) into dash panel. Install attaching nuts and washers. Tighten nuts to 150 inch-pounds.

(2) Using lubriplate, coat the bearing surface of bolt that connects power brake pedal link with brake pedal. Install bolt and nut. Tighten to 30 foot pounds. Install lower pivot bolt (if so equipped).

(3) Attach vacuum hose to check valve.

(4) Install master cylinder on power brake. Tighten mounting nuts to 100 inch pounds. Be sure power brake output push rod is set to correct length. With power brake attached to dash panel and vacuum supplied to unit, the master cylinder should compensate (force jet of fluid up through front chamber compensation port).

(5) Inspect adjustment of stop light switch.

CAUTION: Do not attempt to disassemble brake booster as this unit will be serviced by Manufacturer's Service Station.

POWER BRAKE–BENDIX (Tandem Diaphragm)

GENERAL INFORMATION

The tandem diaphragm type power brake (Figs. 1, 2 or 3,) is a self contained vacuum hydraulic power braking unit. It is of the vacuum suspended type which utilizes engine intake manifold vacuum and atmospheric pressure for its power. This type of unit does not require a vacuum reservoir.

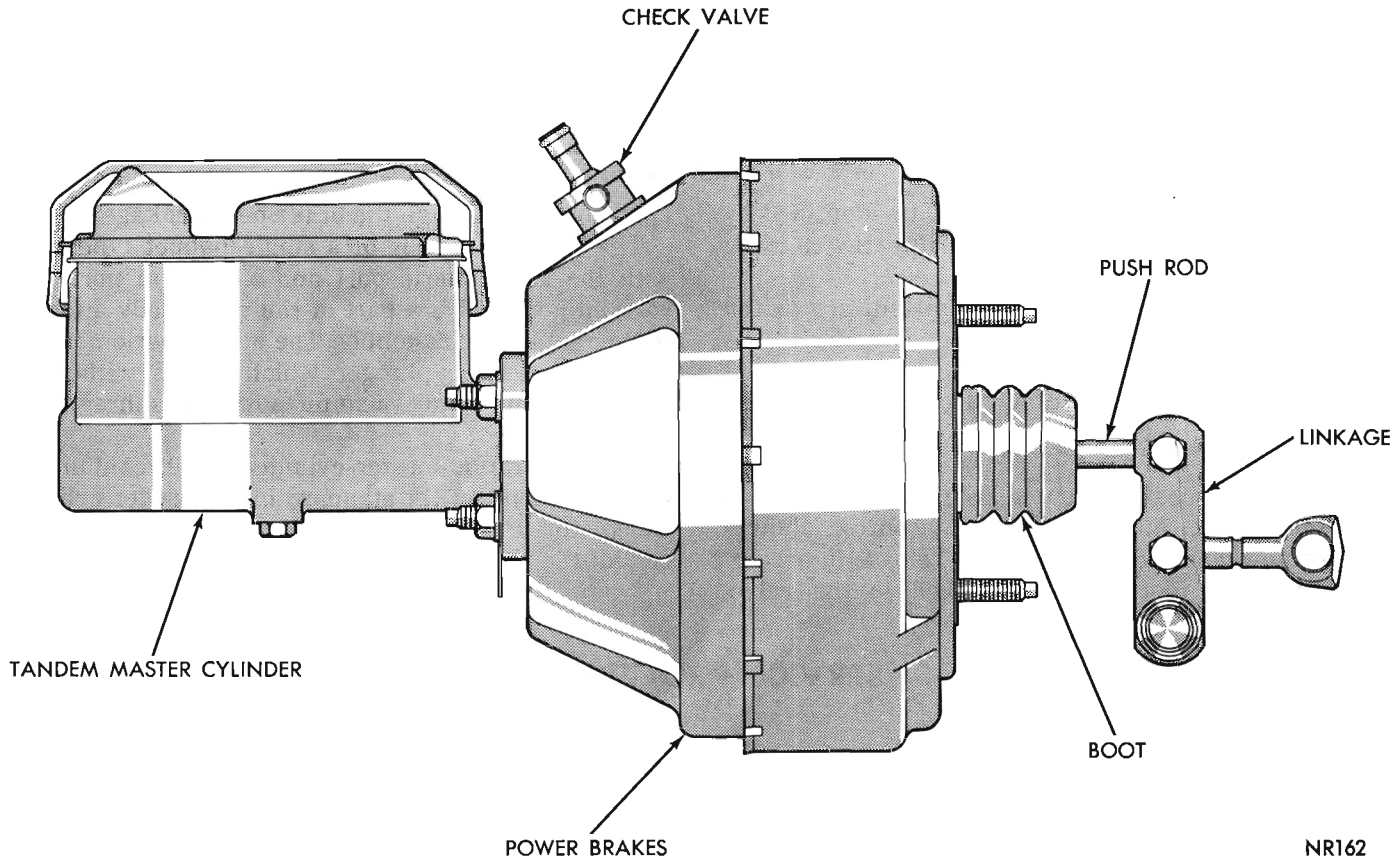

Fig. 1—Power Brake Assembly (Bendix) Disc Type Brakes

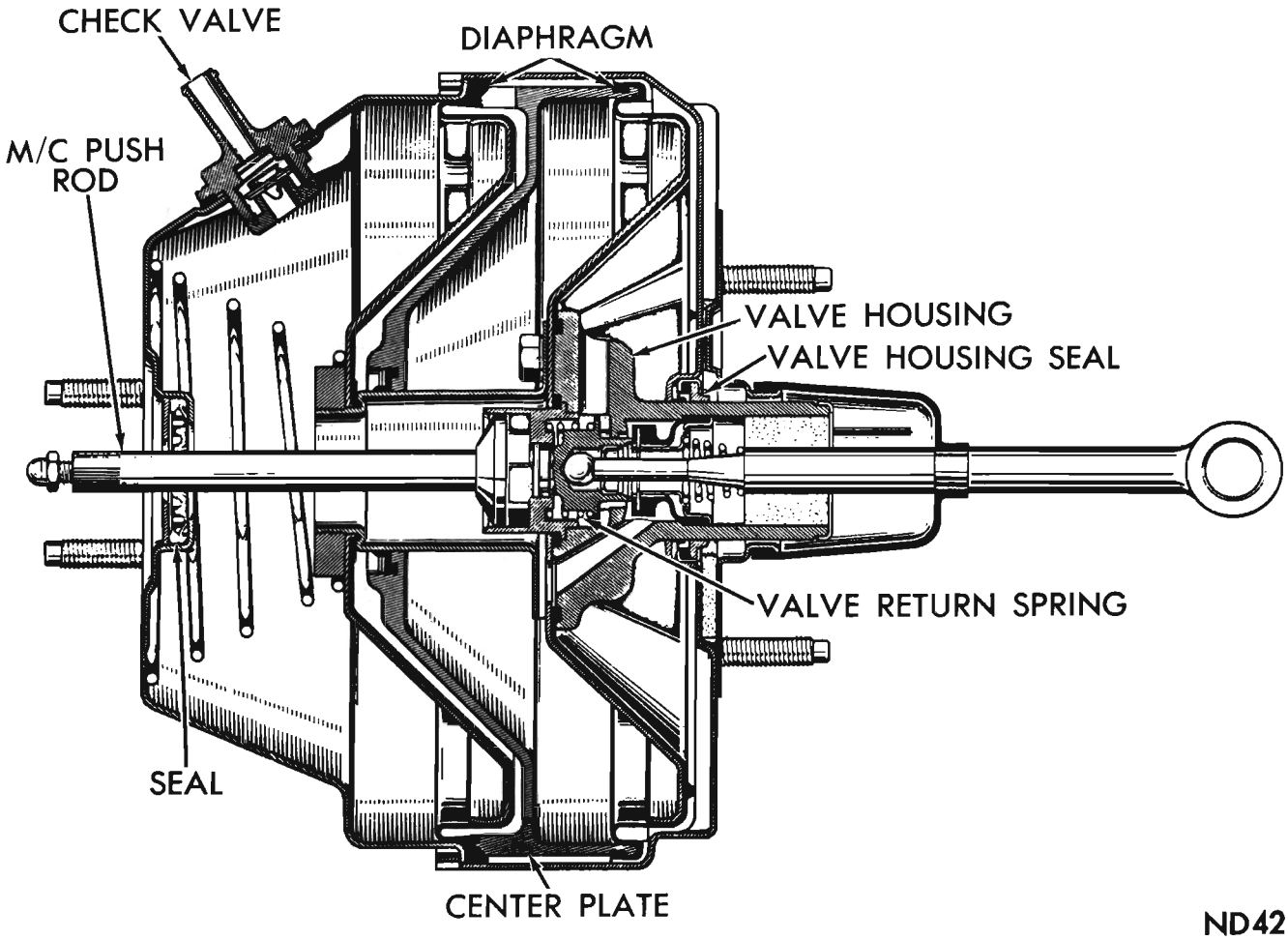

Fig. 2—Power Brake Assembly (Bendix) Disc Brakes

The Bendix Power Brake Unit can be identified by the crimped edge method of attaching the housing and cover together.

The basic elements of the vacuum unit are as follows:

(a) The vacuum power chamber consists of a front and rear shell, a center plate, front and rear diaphragm, hydraulic push-rod and a vacuum diaphragm return spring.

(b) A mechanically actuated control valve integral with the vacuum power diaphragms, controls the degree of power brake application or release in accordance with the foot pressure applied to the valve, operating rod through the brake pedal linkage.

The control valve is of a single poppet type valve with the atmospheric port and a vacuum port. The vacuum port seat is a part of the valve body attached to the diaphragm assembly. The atmospheric port is a part of the valve plunger which moves within the valve housing and vacuum power diaphragm assembly.

(c) A hydraulic master cylinder which contains all of the elements of the standard brake master cylinder except for the special hydraulic push rod which is a part of the power brake.

SERVICE PROCEDURES

REMOVING POWER BRAKE

(1) Disconnect master cylinder from power brake unit.

(2) Disconnect vacuum line from check valve.

(3) From under instrument panel, remove push rod nut and bolt from power brake and brake pedal. (On linkage type power brake, remove lower pivot bolt.)

(4) From under instrument panel remove four brake unit attaching nuts and washers.

(5) Withdraw brake unit assembly from brake support bracket.

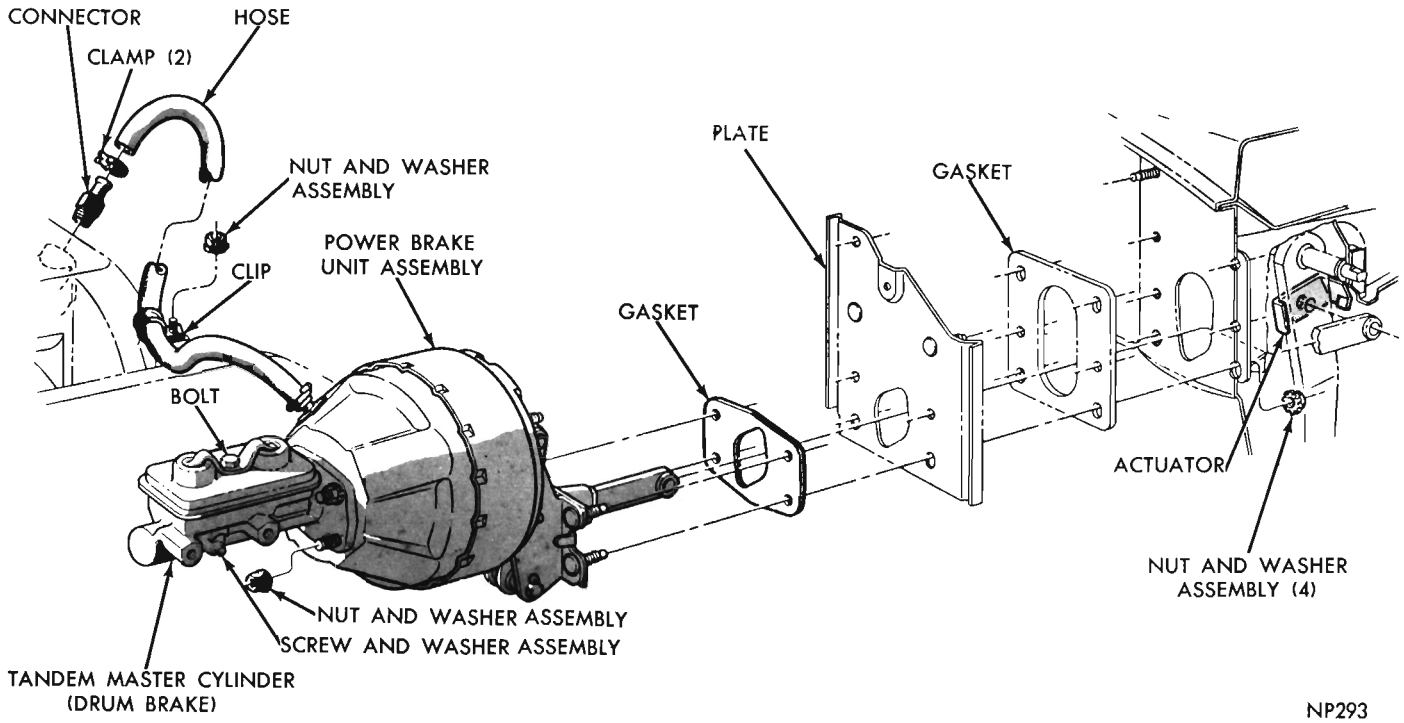

Fig. 3—Power Brake Assembly (Bendix) Drum and Disc Brakes (426 Hemi Only)

INSTALLING POWER BRAKE

(1) Install power brake and linkage assembly (if so equipped) into dash panel. Install attaching nuts and washers. Tighten nuts to 150 inch-pounds.

(2) Using lubriplate, coat the bearing surface of bolt that connects power brake pedal link with brake pedal linkage. Install bolt and nut. Tighten to 30 foot pounds. (Install lower pivot bolt, if so equipped).

(3) Attach vacuum hose to check valve.

(4) Install master cylinder on power brake. Tighten mounting nuts to 100 inch pounds. Be sure power brake output push rod is set to correct length. With power brake attached to dash panel and vacuum supplied to unit, the master cylinder should compensate (force jet of fluid up through front chamber compensation port).

(5) Inspect adjustment of stop light switch.

CAUTION: Do not attempt to disassemble brake booster as this unit will be serviced by Manufacturer's Service Station.

KELSEY-HAYES DISC BRAKES

INDEX

	Page
Assembling Caliper	33
Assembling Master Cylinder	11
Bleeding Disc Brake	35
Brake Shoe Installation	31
Brake Shoe Removal	30
Cleaning and Inspection (Caliper)	31
Cleaning and Inspection (Master Cylinder)	33
Disassembling Caliper	32
Disassembling Master Cylinder	10
Disc Brake Service Precautions	28
General Information	25
Installing Brake Disc and Hub	34
Installing Caliper	33
Installing Master Cylinder	12
Removing Braking Disc and Hub	34
Removing Caliper	31
Removing Master Cylinder	10
Routine Maintenance	28
Service Diagnosis	29

GENERAL INFORMATION

The disc brake (Fig. 1) is a fixed caliper, opposed piston, non-energized, ventilated disc type, actuated by the hydraulic system. There is no lateral movement of either the disc or the caliper. The caliper assembly consists of two caliper housings, bolted together. Each half contains two cylinder bores of 1-5/8 inch diameter. Each cylinder contains a seal, piston and externally attached molded rubber dust boot to

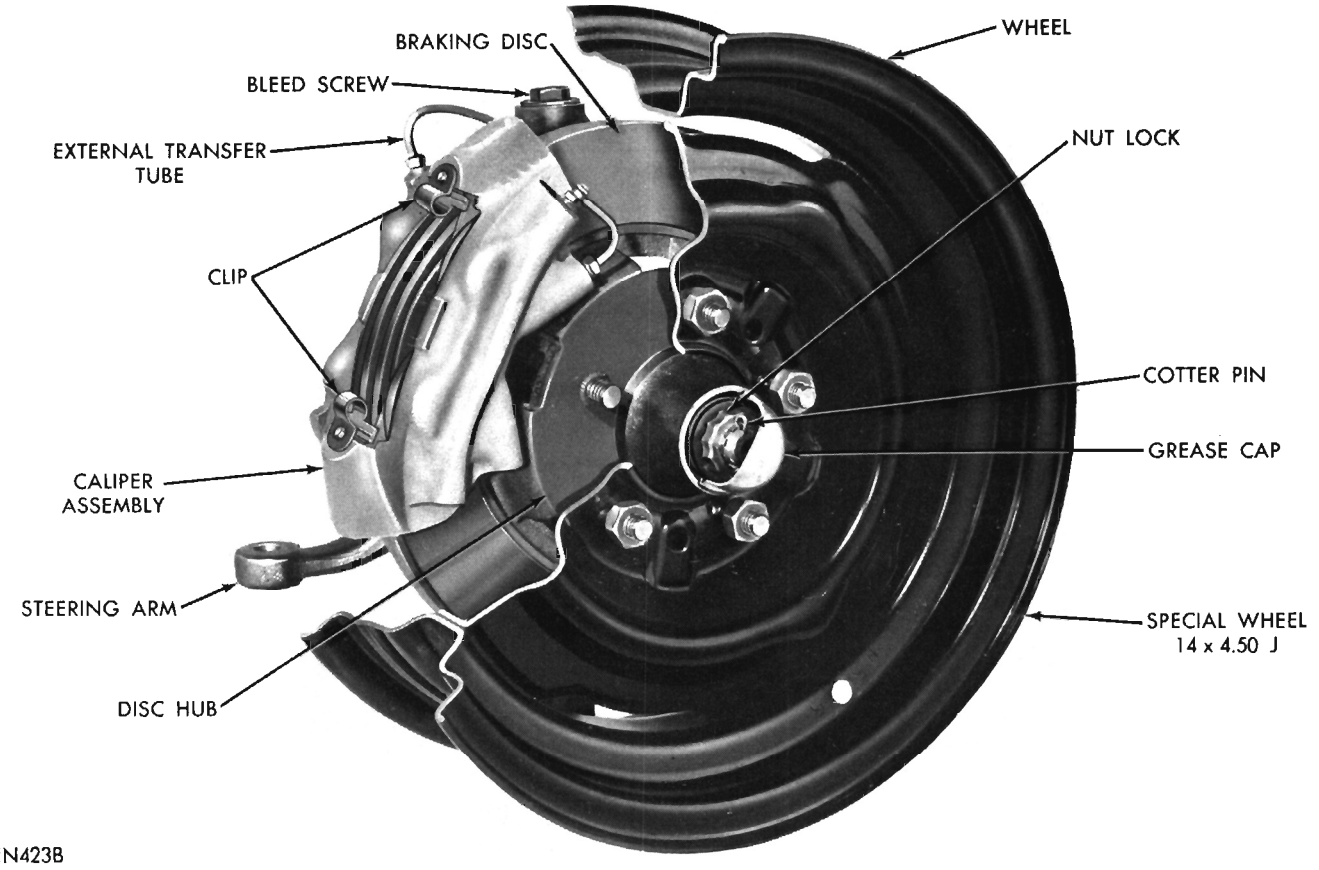

Fig. 1—Disc Brake Assembly—Right Front (Sectional)

seal the cylinder bore from contamination. The pistons are sealed by "rectangular section" rubber piston seals, positioned in grooves machined in the cylinder bores, which provide hydraulic sealing between the pistons (Fig. 2), and the cylinder bores.

The cylinders are connected hydraulically by means of internal passages in the caliper housings and by an external transfer tube between the two halves of the caliper assembly. A bleeder screw and a fluid inlet fitting are provided on each caliper assembly (Fig. 1).

The shoe and lining assemblies are located between parallel machined abutments within the caliper, (Fig. 6) and are supported radially by "ears" on the outer ends of the shoe assemblies. The shoes slide axially in the abutments and ride on machined ledges (bridges) when hydraulic pressure is applied to the pistons. The lining assembly consists of organic friction material, bonded to a metal plate called the shoe, and is replaced as a unit. Brake torque is absorbed by the reaction of the shoe end against the caliper abutments. Two spring clips bolted in the top opening of the caliper act as shoe retaining springs. The caliper is mounted directly to the front wheel spindle and at the rear of the wheel's vertical centerline (Fig. 4).

The cast iron braking disc is of the ventilated type and incorporates forty coolings fins. This increases the cooling area and permits circulation of air through the disc, resulting in more rapid cooling of the brake. The disc is attached to the wheel hub by five flathead serrated bolts. The outside diameter of the disc is 11.04 inches and the inside is 6.91 inches. A splash shield bolted to the spindle is used to prevent road contaminates from contacting the inboard side of the disc and lining surfaces (Fig. 4). The wheel, itself, provides protection for the outboard surface of the disc.

Braking action begins immediately upon application of the brake pedal as hydraulic pressure from the master cylinder to the system applies pressure to the co-axially aligned caliper pistons forcing the linings against both sides of the braking disc, thus applying the brakes. During brake application, the piston seals are deflected by the hydraulic pressure (Fig. 5). When the pressure is released, the seals relax or retract, pulling the pistons back from the shoe and lining assemblies approximately .005". (This reaction is called "seal retraction" and provides the required running clearance as the linings relieve their force on the disc.) Inherent disc runout also contributes to maintaining running clearance. Automatic adjustment is achieved by the pistons sliding outward from the cylinder bore as the lining wears. The piston assumes a new position relative to the seal and maintains the

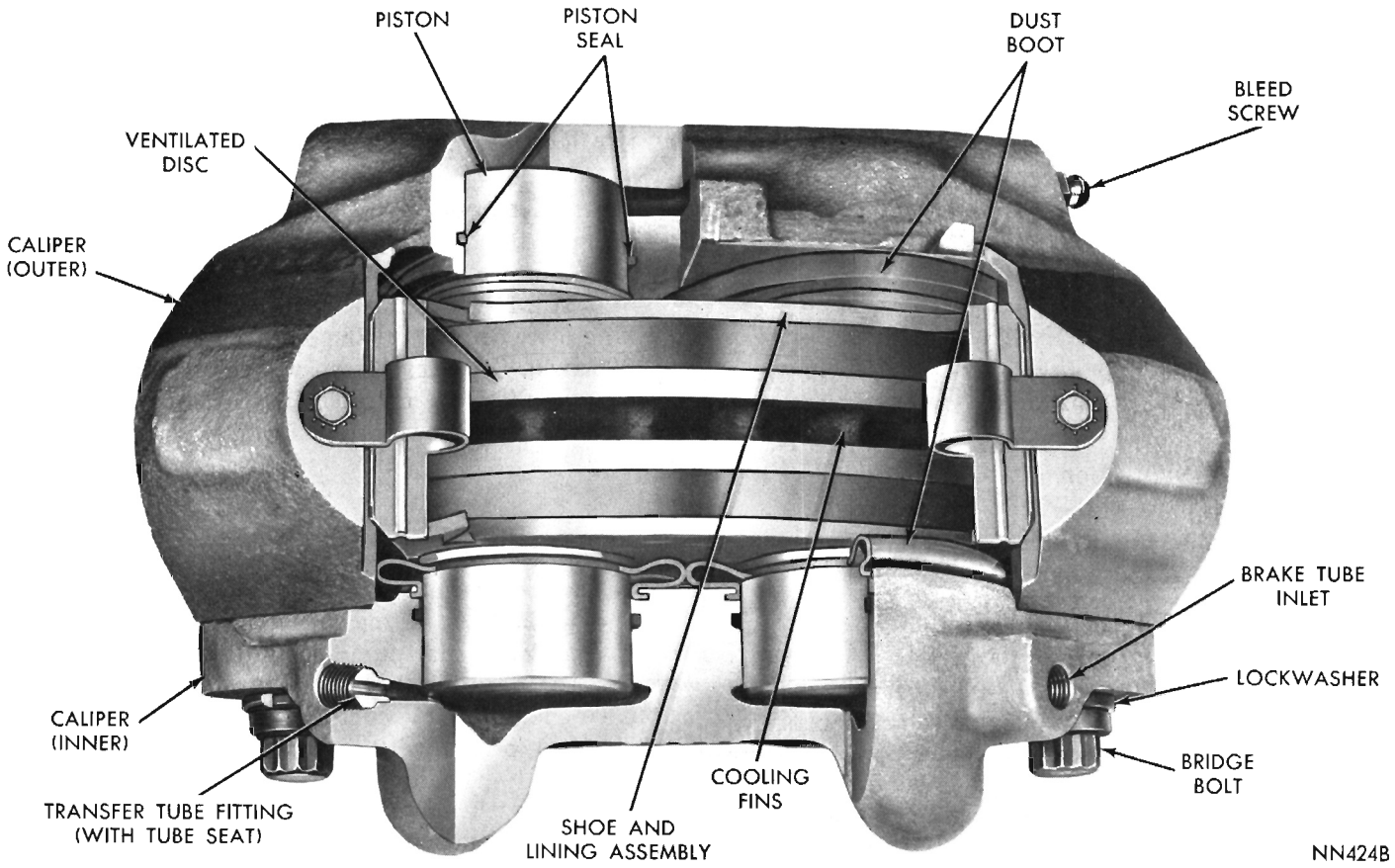

Fig. 2—Disc Brake Caliper Assembly (Sectional)

correct adjustment location at all times (Fig. 5).

There is no residual pressure in the disc brake hydraulic system since the residual pressure valve normally used in drum brake system is located only in the front outlet port of the master cylinder. (See Master Cylinder Section of this Group).

The hydraulic system contains a proportioning valve between the master cylinder and the rear brake wheel cylinders which provides balanced braking action between the front and rear brakes under a wide range of braking conditions. The valve regulates the hydraulic pressure applied to the rear wheel cylinders, thus limiting rear braking action when high pressures are required at the front brakes. In this manner, premature rear wheel skid is prevented.

An additional feature of this disc brake system is a "tell-tale" tab sounding device which indicates when replacement of the shoe and lining assemblies are required (Fig. 3). The tabs located on the shoes create an audible metallic scraping noise from the brake by metal to metal contact on the braking disc. This warns the driver that the lining has worn to a minimum thickness and the vehicle should be returned to the

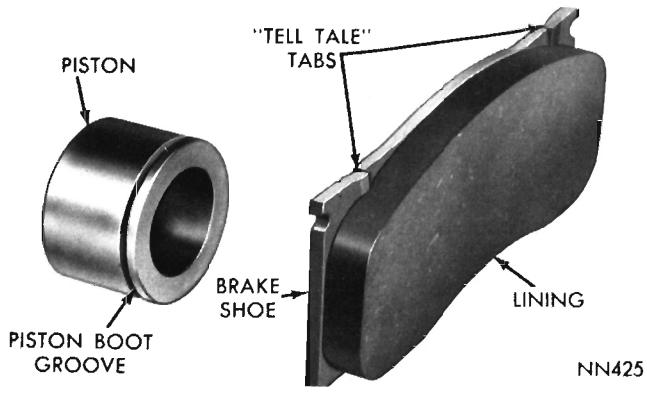

Fig. 3—Disc Brake Piston, Shoe and Lining Assembly

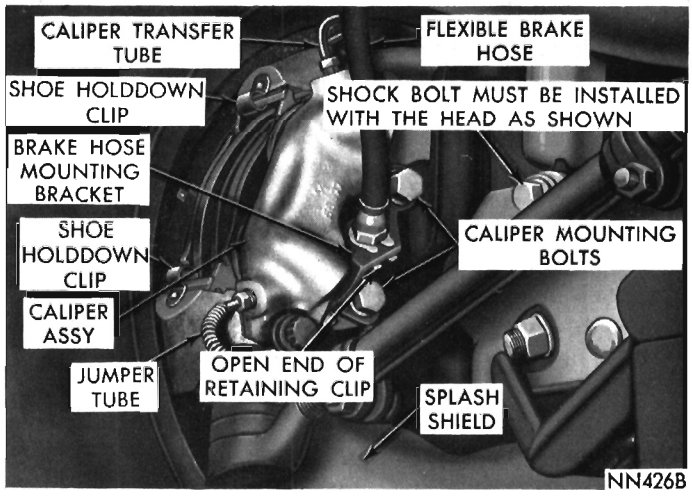

Fig. 4—Disc Brake Caliper Mounting

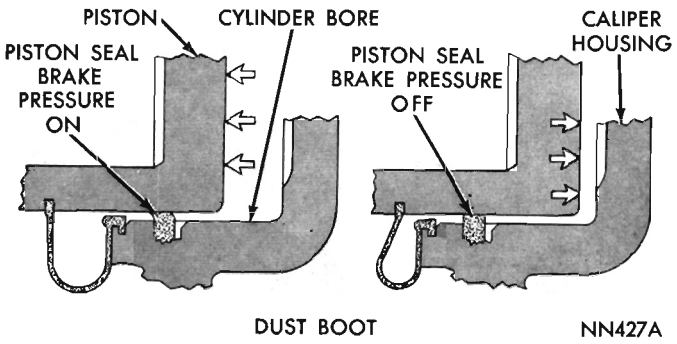

Fig. 5—Piston Seal Function for Automatic Adjustment

dealer for relining of the brakes. This device is not detrimental to the function of the braking disc.

ROUTINE MAINTENANCE

Check Brake Lines and Linings

Raise all four wheels. Remove one of the front wheel and tire assemblies and inspect the braking disc, caliper and linings. (The wheel bearings should be inspected at this time and repacked if necessary.) **The caliper must be removed to inspect and pack the inner wheel bearing.**

Do not get oil or grease on the disc or the linings. If the linings are worn to within .030 inch of the surface of the shoe, replace both sets of shoe and lining assemblies (inboard and outboard) on the front wheels. It is recommended that both front wheel sets be replaced whenever a respective shoe and lining is worn or damaged.

If the caliper is cracked or fluid leakage through the casting is evident, it must be replaced as a unit.

Shoe and Lining Wear

If a visual inspection does not adequately determine the condition of the lining, a physical check will be necessary.

To check the amount of lining wear, remove the wheel and tire assembly, the spring clips, and the shoe and lining assemblies (see "Brake Shoe Removal" paragraph). Three (3) thickness measurements with a micrometer should be taken across the middle section of the shoe and lining; one reading at each side and one reading in the center. When an assembly has worn to a thickness of .180 inch, it should be replaced. If shoes do not require replacement, reinstall making sure to replace to their original inner and outer positions (see "Brake Shoe Installation" paragraph).

When shoe and lining replacement is required, a "scraping" noise from the front brakes will be heard. This noise is metal-to-metal contact between the tabs on the shoe assemblies and the braking disc. When the noise becomes audible to the driver, the lining has worn to the metal tabs and the brakes must be relined. The contact between the metal tab and disc will not affect the functioning of the disc brake system, but continued use until lining is completely worn away will cause disc damage.

Running Clearance

To check the shoe and lining assembly to the braking disc clearance, remove the wheel and tire assembly. Insert a feeler gauge between the lining and the braking disc. Ordinarily, the clearance should be .003 to .006 inch. However, if the vehicle was stopped by a brake application just prior to checking the clearance, it is considered normal for the brakes to drag slightly.

Brake Roughness

The most common cause of brake chatter on disc brakes is a variation in thickness of disc. If roughness or vibration is encountered during highway operation or if pedal pumping is experienced at low speeds, the disc may have excessive thickness variation. To check for this condition, measure the disc at 12 (twelve) points with a micrometer at a radius approximately one inch (1″) from edge of disc. If thickness measurements vary by more than .0005 inch the disc should be replaced with a new one.

Brake Disc Runout

Excessive lateral runout of the braking disc will cause a "knocking back" of the pistons, which will create increased pedal travel and vibration when the brakes are applied.

Before checking the runout, the wheel bearing end play should be eliminated by tightening the adjusting nut. **The readjustment is very important and will be required at the completion of the test to prevent bearing failure.** After tightening the adjusting nut, be sure that the braking disc can still be rotated.

Dial indicator C-3339 should be clamped to the steering knuckle so that the stylus contacts the braking disc at a point approximately one (1) inch from the outer edge, (Fig. 15.) Rotate the disc and check the indicator reading. The maximum total indicator reading on the gauge should not exceed .0025 inch. If the reading exceeds this specification, the disc should be replaced. **Do not attempt to refinish a disc that indicates runout in excess of the specification.**

DISC BRAKE SERVICE PRECAUTIONS

(1) Grease or any other foreign material must be kept off the caliper assembly, surfaces of the braking disc and external surfaces of the hub, during service procedures. Handling the braking disc and caliper should be done in a way to avoid deformation of the

braking disc and nicking or scratching the brake linings.

(2) If inspection reveals the square sectioned rubber piston seals are worn or damaged, they should be replaced immediately.

(3) During removal and installation of a wheel and tire assembly, exercise care so as not to interfere with or damage the bleeder screw or the transfer tube.

(4) The front wheel bearing end play is important and must be within specifications.

(5) Be sure vehicle is centered on the hoist before servicing any of front end components to avoid bending or damaging disc splash shield on full right or left wheel turns.

(6) Before vehicle is moved after any brake service work, **be sure and obtain a firm brake pedal.**

(7) The assembly bolts of two caliper housings should not be disturbed, unless servicing the caliper assembly is required.

(8) **Riding brake pedal** (common left foot application) should be avoided during vehicle operation.

(9) The wheel, tire, hub and disc assembly **cannot** be removed as an assembly. The caliper assembly must be removed before removal of hub and disc assembly.

DISC BRAKE SERVICE DIAGNOSIS

Condition	Possible Cause	Correction
EXCESSIVE PEDAL TRAVEL	(a) Rear brake adjustment required.	(a) Check and adjust rear brakes.
	(b) Air leak, or insufficient fluid in system or caliper.	(b) Check system for leaks.
	(c) Warped or excessively tapered shoe and lining assembly.	(c) Install new shoe and linings.
	(d) Excessive disc runout.	(d) Check disc for runout with dial indicator. Install new disc.
	(e) Loose wheel bearing adjustment.	(e) Readjust wheel bearings to specified torque.
	(f) Improper brake fluid (boil).	(f) Drain and install correct fluid.
	(g) Damaged caliper piston seal.	(g) Install new piston seal.
BRAKE ROUGHNESS OR CHATTER (Pedal Pulsating)	(a) Excessive out-of-parallelism of braking disc.	(a) Check disc for runout with dial indicator. Install new disc.
	(b) Rear brake drums out-of-round.	(b) Loosen and retorque wheel nuts to specifications.
	(c) Excessive lateral runout of braking disc.	(c) Check disc for lateral runout with dial indicator. Install new disc.
	(d) Excessive front bearing clearance.	(d) Readjust wheel bearings to specified torque.
	(e) Rear brake drums distorted by improper tightening of nuts.	(e) Check drums for out-of-round and regrind if necessary.
EXCESSIVE PEDAL EFFORT	(a) Power brake malfunction.	(a) Check and correct power unit.
	(b) Frozen or seized pistons.	(b) Disassemble caliper and free up pistons. Clean parts.
	(c) Shoe and lining worn below .155". (Lining only—.30".)	(c) Install new shoe and linings.
	(d) Brake fluid, oil or grease on linings.	(d) Install new shoe linings as required.
	(e) Incorrect lining.	(e) Remove lining and install correct lining.
PULL	(a) Loose calipers.	(a) Tighten caliper mounting bolts from 50 to 80 ft. pounds.
	(b) Frozen or seized pistons.	(b) Disassemble caliper and free up pistons.
	(c) Rear brake pistons sticking.	(c) Free up rear brake pistons.
	(d) Front end out of alignment.	(d) Check and align front end.
	(e) Broken rear spring.	(e) Install new rear spring.
	(f) Out-of-round rear drums.	(f) Check and regrind drums if necessary.
	(g) Incorrect tire pressure.	(g) Inflate tires to recommended pressures.
	(h) Brake fluid, oil or grease on linings.	(h) Install new shoe and linings.
	(i) Restricted hose or line.	(i) Check hoses and lines and correct as necessary.
	(j) Rear brakes out of adjustment.	(j) Adjust rear brakes.
	(k) Unmatched linings.	(k) Install correct lining.
	(l) Distorted brake shoes.	(l) Install new brake shoes.

Condition	Possible Cause	Correction
NOISE	**Groan—** Brake noise emanating when slowly releasing brakes (creep—groan) (a) Not detrimental to function of disc brakes—no corrective action required. (Indicate to operator this noise may be eliminated by slightly increasing or decreasing brake pedal efforts.)	
	Rattle— Brake noise or rattle emanating at low speeds on rough roads, (front wheels only)	
	(a) Excessive clearance between shoe and caliper.	(a) Install new shoe and lining assemblies.
	Scraping— (a) Loose wheel bearings.	(a) Readjust wheel bearings to correct specifications.
	(b) Braking disc rubbing housing.	(b) Check for rust or mud buildup on caliper housing adjacent to disc. Check caliper mounting and bridge bolt tightness.
	(c) Mounting bolts too long.	(c) Install mounting bolts of correct length.
FRONT BRAKES HEAT UP DURING DRIVING AND FAIL TO RELEASE	(a) Residual pressure valve in master cylinder.	(a) Remove valve from cylinder.
	(b) Frozen or seized piston.	(b) Disassemble caliper, hone cylinder bore, clean seal groove and install new pistons, seals and boots.
	(c) Operator riding brake pedal.	(c) Instruct owner how to drive with disc brakes.
	(d) Sticking pedal linkage.	(d) Free up sticking pedal linkage.
	(e) Power brake malfunction.	(e) Check and correct power unit.
LEAKY WHEEL CYLINDER	(a) Corroded bore.	(a) Hone bore and replace boots.
	(b) Damaged or worn caliper piston seal.	(b) Disassemble caliper and install new seal.
	(c) Scores or corrosion on surface of piston.	(c) Disassemble caliper and hone cylinder bore. If necessary, install new pistons.
GRABBING OR UNEVEN BRAKING ACTION	(a) Causes listed under "Pull."	(a) Corrections listed under "Pull."
	(b) Power brake malfunction.	(b) Check and correct power unit.
BRAKE PEDAL CAN BE DEPRESSED WITHOUT BRAKING EFFECT	(a) Air in hydraulic system or improper bleeding procedure.	(a) Bleed system.
	(b) Leak in system or caliper.	(b) Check for leak and repair as required.
	(c) Pistons pushed back in cylinder bores during servicing of caliper (shoe and lining not properly positioned).	(c) Reposition brake shoe and lining assemblies. Depress pedal a second time and if condition persists, check following causes:
	(d) Leak past piston cups in master cylinder.	(d) Recondition master cylinder.
	(e) Damaged piston seal in one or more of cylinders.	(e) Disassemble caliper and replace piston seals as required.
	(f) Leak in rear brake cylinder.	(f) Hone cylinder bore. Install new piston cylinder cups.
	(g) Rear brakes out of adjustment.	(g) Adjust rear brakes.
	(h) Bleeder screw open.	(h) Close bleeder screw and bleed entire system.

SERVICE PROCEDURES

BRAKE SHOE REMOVAL (Fig. 1)

(1) Raise vehicle on a hoist or jackstands.

(2) Remove wheel covers, and wheel and tire assembly.

(3) Remove shoe retainer assemblies.

(4) Using two pair of pliers, grasp tabs on outer ends of shoes, remove shoe and lining by pulling outward (Fig. 6). Due to a ridge of rust that may build up on rotor surface outside of lining contact area, it may be necessary to force piston back slightly into bores. Pistons can be forced back into bores by forcing shoe back with a water pump pliers placed on corner of the shoe and caliper housing (Fig. 6).

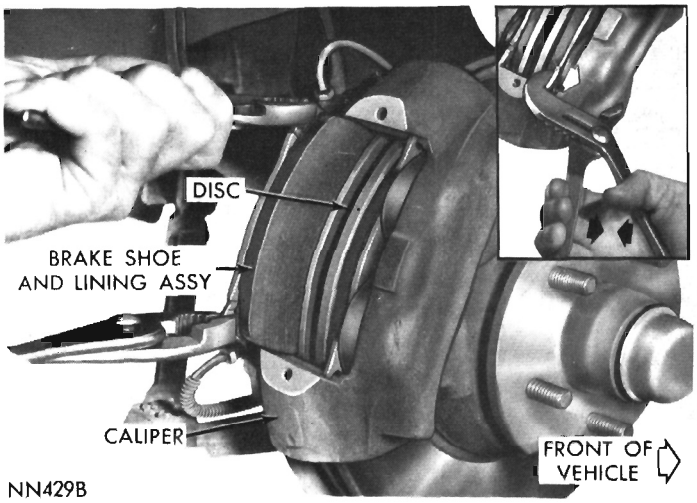

Fig. 6—Removing Brake Shoe and Lining

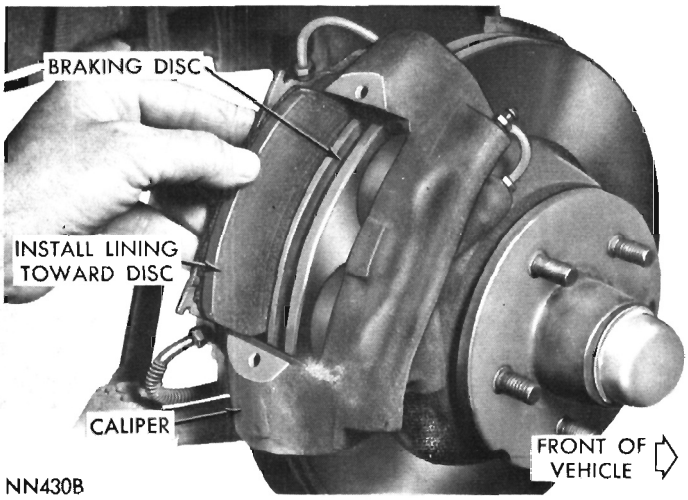

Fig. 7—Installing Brake Shoes and Lining

CLEANING AND INSPECTION

Check the caliper for seal leaks (evident by fluid moisture around the cavity) and for any damage to the piston dust boot. Wipe the cavity clean (between the inner and outer caliper housings) with a shop towel. Check the piston dust boot for proper seating in the piston bore and the caliper housing. If excessive fluid moisture is evident, it will be necessary to install a new piston seal and piston dust boot. (Refer to "Disassembing the Caliper" paragraph).

BRAKE SHOE INSTALLATION

(1) Push all pistons back into their bores until bottomed to allow for installation of new thick shoes. This can be done by placing a flat sided metal bar or tool against piston and exerting a steady force until bottomed. This will cause fluid to rise in the reservoir so be sure and remove a quantity of fluid from the reservoir before hand.

(2) Slide new shoe and lining into caliper with ears of shoe resting on bridges of caliper (Fig. 7). (Be sure shoe is fully seated and lining is facing disc.)

(3) Slide remaining shoe and lining into caliper, using same procedure as described above.

(4) Place shoe retainer assemblies in position on caliper.

(5) Pump brake pedal several times until a firm pedal has been obtained and shoe and lining have been properly seated.

(6) Install wheel and tire. Tighten wheel stud nuts to 55 foot-pounds. Install wheel cover.

(7) Check and refill master cylinder reservoir with brake fluid as required.

CAUTION: Road test the vehicle and make several stops to wear off any foreign material on the brakes and to seat the linings. The vehicle may pull to one side or the other if this is not done.

REMOVING CALIPER (Fig. 4)

(1) Raise car on hoist or jackstands.

(2) Remove wheel cover and wheel and tire assembly.

(3) Disconnect front brake flexible hose from brake tube at frame mounting bracket. (Plug brake tube to prevent loss of fluid.)

(4) Remove bolts that attach caliper assembly to steering knuckle. Should it become necessary to install a new flexible brake hose on a disc brake equipped vehicle, scribe a mark on hose bracket on side where hose enters, and position of hose retaining clip underneath (Fig. 4.) **Be sure at reassembly, that open end of retaining clip is facing out and away from caliper.**

(5) Slowly slide caliper assembly up and away from brake disc (Fig. 8) and remove to bench for disassembly.

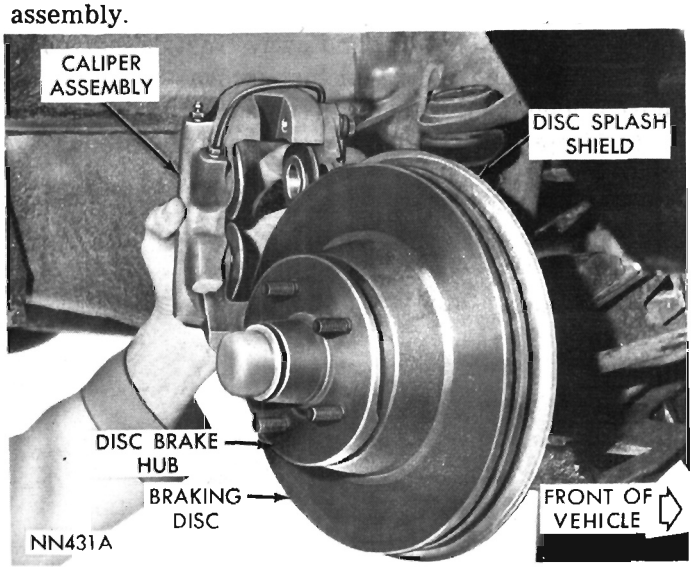

Fig. 8—Removing or Installing Caliper

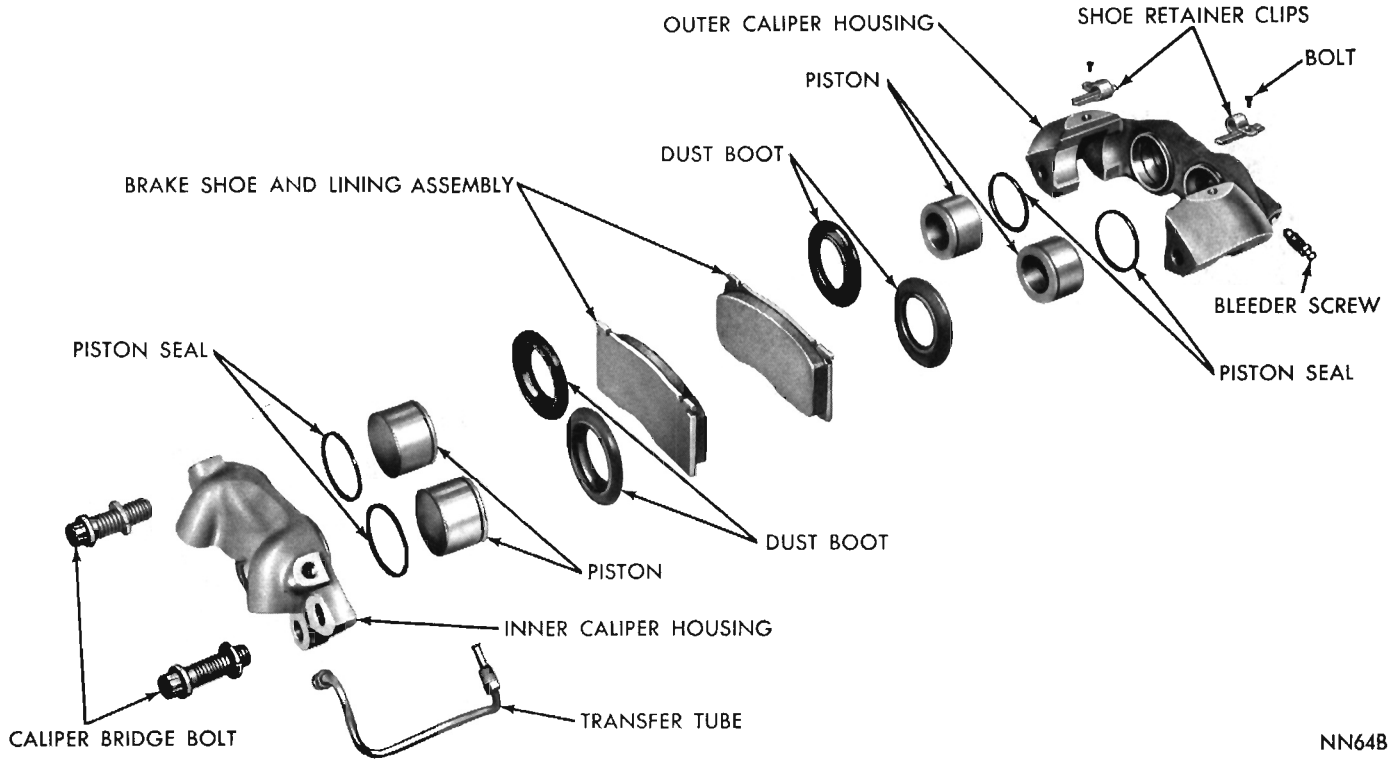

Fig. 9—Caliper Assembly (Exploded View)

DISASSEMBLING CALIPER (Fig. 9)

(1) Remove shoe retainer assemblies. Remove jumper tube (armored) at caliper.

(2) Mount caliper assembly in a vise equipped with protector jaws. (Use caliper mounting lugs.) Remove transfer tube.

(3) Remove shoe and lining assemblies.

(4) Remove bridge bolts that hold two halves of caliper together. **(Make sure at reassembly that these two bolts are used and tightened to correct torque.)** Separate assemblies.

(5) Peel dust boot out and away from caliper housing retainer and out of piston groove (Fig. 10). Remove remaining dust boots in same manner.

(6) Using Tool C-3999, remove each of pistons (Fig. 11). **Care must be used so as not to scratch, burr or otherwise damage piston on outside diameter.** To do so effects sealing qualities of piston. Draw piston straight out of its bore. If a piston becomes cocked, removal is more difficult and piston or bore may be damaged.

(7) Using a small pointed wooden or plastic tool, remove piston seals from groove in cylinder bore (Fig. 12). Discard old seals. (Use care so as not to scratch bore or the seal groove.)

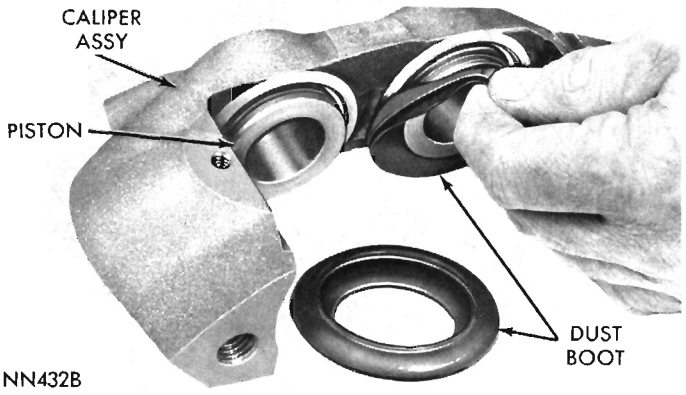

Fig. 10—Removing Dust Boot from Piston and Caliper

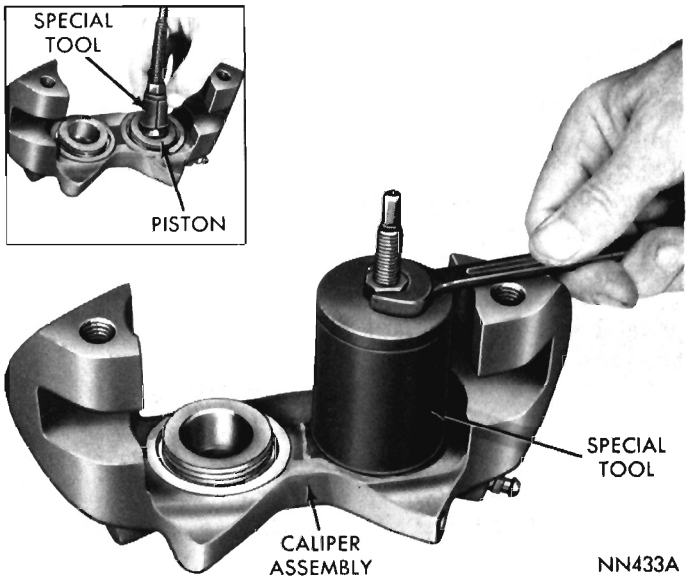

Fig. 11—Removing Pistons from Caliper

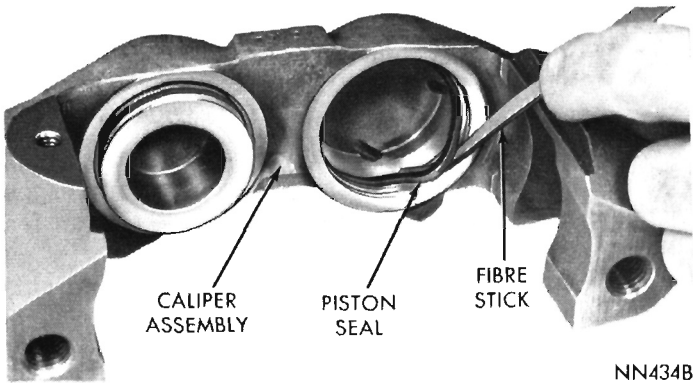

Fig. 12—Removing Piston Seals from Caliper

CLEANING AND INSPECTION

Clean all parts in brake fluid and wipe dry, using clean, lint free, shop towels. Using an air hose, blow out the drilled passages and bores. Check the dust boots for punctures or tears. If punctures or tears are evident, new boots should be installed at reassembly. Inspect the piston bores in both housings for scoring or pitting. Install a new piston if it is pitted, scored or the chrome plating is worn off. Bores that show light scratches or corrosion, can usually be cleaned with crocus cloth. However, bores that have deep scratches or scoring may be honed, using Tool C-3993, providing the diameter of the bore is not increased more than .002 inch. If the bore does not clean up within this specification, a new caliper housing should be installed. (Black stains on the bore walls are caused by the piston seals and will do no harm.) **When using hone C-3993 (Fig. 13) be sure and install the hone baffle before honing bore. The baffle is used to protect the hone stones from damage. After honing the bore carefully, clean the seal groove with a stiff non-metallic rotary brush.**

Use extreme care in cleaning the caliper after honing. Remove all dust and grit by flushing the caliper with brake fluid; wipe dry with a clean lintless cloth and then clean a second time in the same manner.

ASSEMBLING CALIPER (Fig. 9)

(1) Clamp inner caliper half in a vise (with protector jaws) by mounting lugs.

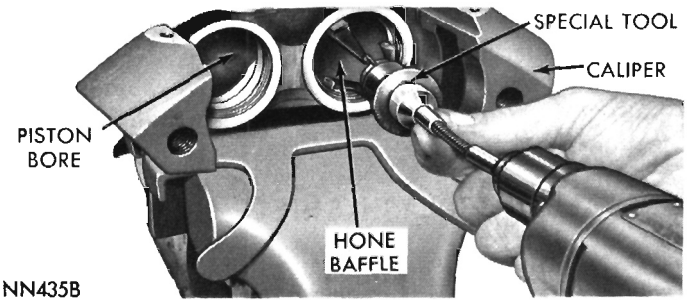

Fig. 13—Honing Piston Bores

(2) Dip new piston seals in clean brake fluid and install in caliper grooves. The seal should be positioned at one area in groove and gently worked around cylinder bore with a finger until properly seated. **Never use an old piston seal.** (Be sure seals are not twisted or rolled.)

(3) Coat outside diameter of pistons with clean brake fluid and install them in cylinder bores (Fig. 14). with open end of piston and boot retaining groove facing out of cylinder.

(4) Position piston squarely in bore and apply slow steady pressure until piston is positioned. **If piston will not position itself, remove piston and check position of seal for proper position in groove.**

(5) Install a new dust boot in position in groove in caliper and in piston. **Be sure dust boot is properly seated.** Install new remaining dust boots in same manner.

(6) Install caliper half on one clamped in vise, then install assembly bolts (bridge bolts) and tighten from 70 to 80 foot-pounds. **(Under no condition should these bolts be substituted or replaced by an inferior bolt. The use of bolts other than those specified for this purpose, could cause a caliper failure resulting in an accident.**

(7) Install transfer tube and tighten securely. (Be sure tube is under protective eyebrow.)

(8) Install bleeder screw but do not tighten.

INSTALLING CALIPER

Before installing the caliper assembly over the brake disc, check the disc for runout and thickness variation. Mount a dial indicator (Fig. 15) and check the lateral runout. Runout should not exceed .0025 inch. If runout exceeds the specified figure, remove the disc and install a new one. (Be sure the wheel bearings are adjusted to zero lash during this check.) Readjust wheel bearings after check. Thickness

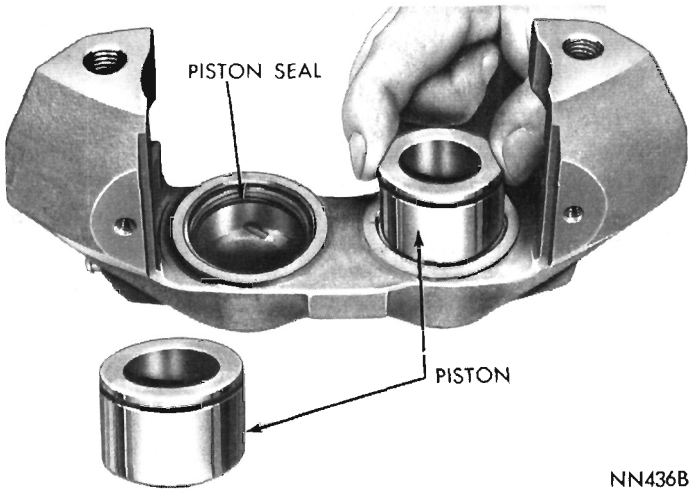

Fig. 14—Installing Pistons in Caliper

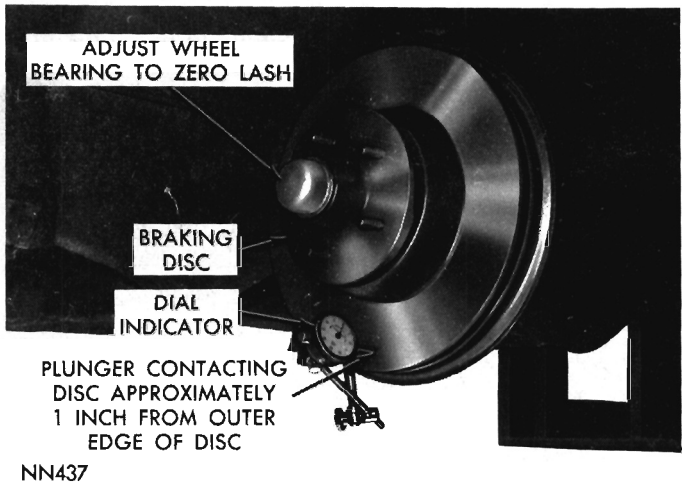

Fig. 15—Checking Braking Disc Run-out

variation of the disc, measure the disc at 12 (twelve points with a micrometer at a radius approximately one inch (1″) from edge of disc. If thickness measurements vary by more than .0005 inch, the disc should be replaced with a new one.

(1) Install caliper assembly over disc and align mounting holes. Install mounting bolts and tighten from 50 to 80 foot-pounds. **A check should be made to be sure that braking disc runs squarely and centrally within caliper opening. There should be approximately .090 to .120 inch clearance between outside diameter of braking disc and caliper. There should also be a minimum of .050 inch from either disc face to machined groove in outboard caliper.**

(2) Install shoe and lining assemblies between caliper and braking disc.

(3) Install shoe retainers in position on caliper.

(4) Open bleeder screw, then reconnect brake line at caliper housing. Allow caliper to fill with brake fluid; then, close bleeder screw. (Be sure all air bubbles have escaped; bleeding caliper.) Replenish brake fluid in master cylinder.

(5) **"Pump" brake pedal several times to actuate piston seals and position shoe and lining assemblies.**

(6) After assembling caliper unit be sure and check for fluid tightness under maximum pedal pressures. (Recheck master cylinder reservoir level.) **Check and be sure that lower shock absorber mounting bolt has been installed from rear and nut toward front of vehicle. This is important. (Fig. 4.)**

(7) Install wheel and tire assembly and tighten wheel stud nuts to 55 foot-pounds. **This is important.** Install wheel cover.

(8) Remove jackstands or lower hoist.

CAUTION: Road test the vehicle and make several stops to wear off any foreign material on the brakes and to seat the linings. The vehicle may pull to one side or the other if this is not done.

REMOVING BRAKING DISC AND HUB

(1) Remove wheel cover and wheel and tire assembly.

(2) Remove caliper assembly as described under "Removing Caliper" paragraph, (but do not disconnect brake line). Suspend caliper from wire hook or loop to avoid strain on hose and damage to transfer tube.

(3) Remove grease cup, cotter pin, nut lock, nut, thrust washer and outer wheel bearing.

(4) Pull disc and hub off wheel spindle.

INSTALLING BRAKING DISC AND HUB

(1) Slide brake disc and hub assembly on spindle.

(2) Install outer bearing, thrust washer, and nut.

(3) Tighten wheel bearing adjusting nut to 90 inch-pounds while rotating hub and disc.

(4) Position lock nut on nut with one pair of slots in line with cotter pin hole.

(5) Back off adjusting nut and lock assembly on slot then install cotter pin. The resulting adjustment should be zero (no preload) end play. (This is very important, when checking disc runout.)

(6) Install a dial indicator C-3339 (Fig. 15) and check runout of disc on both sides. The runout should not exceed .0025 inch. Readjust wheel bearing clearance after checking braking disc runout.

(7) Clean grease cap, coating inside with wheel grease (do not fill) and install cap.

(8) Install caliper assembly as described in "Installing the Caliper" paragraph.

(9) Install wheel and tire assembly and wheel cover.

(10) Remove jackstands or lower hoist.

(11) Road test vehicle as described in "Brake Shoe Installation" paragraph.

REMOVING SPLASH SHIELD

(1) Raise vehicle on a hoist or jackstands.

(2) Remove wheel cover and wheel and tire assembly.

(3) Remove caliper assembly, as described under "Removing Caliper" paragraph. Do not disconnect brake line.

(4) Remove grease cup, cotter pin, nut lock, nut, thrust washer and outer wheel bearing.

(5) Pull braking disc and hub off wheel spindle.

(6) Remove bolts that attach splash shield (Fig. 16) to steering knuckle.

INSTALLING SPLASH SHIELD (Fig. 16)

(1) Position styrafoam gasket and install splash shield in position on steering knuckle, with cutout section toward rear.

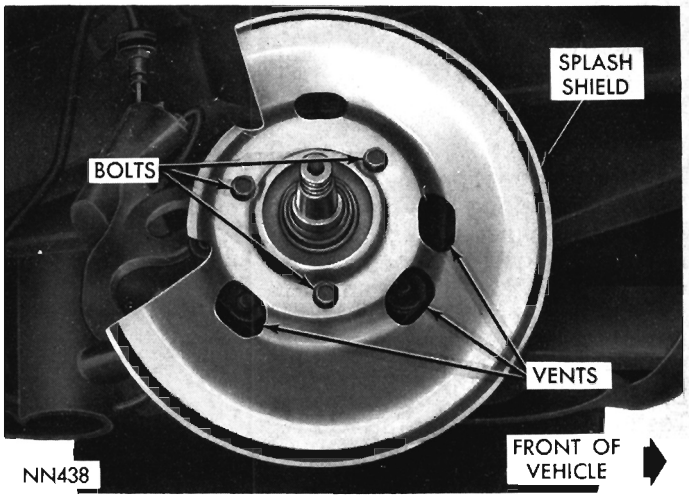

Fig. 16—Disc Splash Shield Mounting

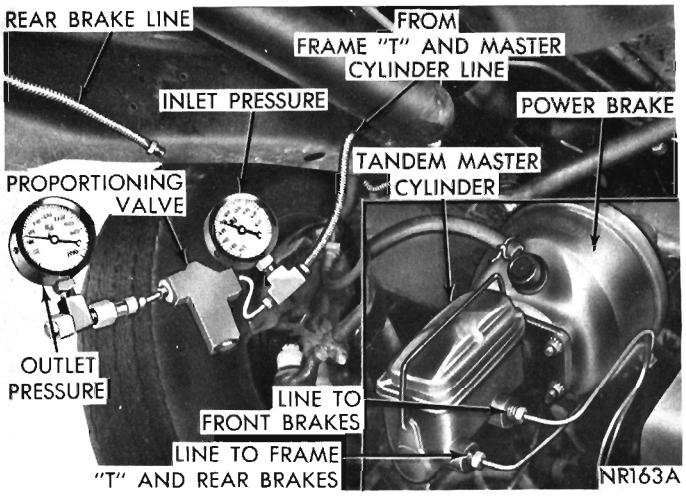

Fig. 17—Checking Proportional Valve

(2) Align mounting holes and install attaching bolts. Tighten to 17 inch-pounds.

(3) Reinstall braking disc and hub assembly. Install outer bearing, thrust washer and nut. Tighten front wheel bearing as described previously. Install nut lock, cotter pin and grease cap.

(4) Install caliper assembly as described under "Installing Caliper" paragraph.

(5) Install wheel and tire. Tighten wheel stud nuts (in a star pattern) to 30 foot-pounds, then to 55 foot-pounds. Install wheel cover.

(6) Remove jackstands or lower hoist.

BLEEDING DISC BRAKE

The disc brake hydraulic system can be bled (preferably) **with pressure bleeding equipment.** On disc brake equipped vehicles, the brake pedal will require more pumping, and frequent checking of the fluid level in the master cylinder during the bleeding operation, if pressure bleeding equipment is not used.

It will be necessary to remove the front wheel and tire assemblies in order to gain access to the bleeder screw, located on the outboard caliper housing at the top. (Fig. 1). **Never use brake fluid that has been drained from the hydraulic system, when bleeding the brakes.**

On vehicles equipped with disc brakes, be sure that the disc brake pistons are returned to their normal positions and that the shoe and lining assemblies are properly seated.

Before driving the vehicle, check the operation of the brakes to be sure that a firm pedal has been obtained.

(1) Remove wheel covers, then raise vehicle using a hoist or jackstands.

(2) Remove wheel and tire assemblies.

(3) Bleed the front brakes first, then proceeding to the right rear and left rear in order.

After bleeding the brakes, proceed as follows:

(1) Install wheel and tire assemblies, tightening wheel stud nuts to 55 foot-pounds.

(2) Install wheel covers.

(3) Remove jackstands or lower hoist.

TESTING PROPORTIONING VALVE

When a premature rear wheel slide is obtained on brake application, it usually is an indication that the fluid pressure to the rear brakes is above the reduction ratio for the rear line pressure and that a malfunction has occurred within the proportioning valve, which should be tested.

To test the proportioning valve, proceed as follows:

(1) Install one of Gauge Set C-4007 and "T" in brake line between master cylinder and proportioning valve and remaining Gauge and "T" at output end of valve and brake line. (Fig. 17). **Be sure all joints are fluid tight.**

(2) Have a helper exert pressure on brake pedal (holding pressure). Obtain a reading on master cylinder output of approximately 500 p.s.i.

(3) While pressure is being held as above, reading on valve outlet Gauge should be 360-405 p.s.i.

If the proportioning valve pressure readings do not meet the specifications, the valve should be removed and a new valve installed.

BENDIX DISC BRAKES

INDEX

	Page
Assembling Caliper	41
Assembling Master Cylinder	11
Bleeding Disc Brake	43
Brake Shoe Installation	40
Brake Shoe Removal	39
Cleaning and Inspection (Caliper)	39
Cleaning and Inspection (Master Cylinder)	41
Disassembling Caliper	40
Disassembling Master Cylinder	10
Disc Brake Service Precautions	38
General Information	36
Installing Braking Disc and Hub	43
Installing Caliper	43
Installing Master Cylinder	12
Removing Braking Disc and Hub	43
Removing Caliper	40
Removing Master Cylinder	10
Service Diagnosis	29
Specifications	64
Testing Proportioning Valve	44

GENERAL INFORMATION

The front wheel disc brake (Fig. 1) consists of a fixed caliper (inner and outer housing) two friction pads (brake lining), integrally molded to steel shoes, four pistons, piston return springs, piston seals and dust boots. The brake disc is made from high grade cast iron and has a series of air vent louvres to provide for cooling of the disc. The splash shield that is bolted to the spindle is used to prevent road contaminants from contacting the inboard side of the disc and lining surfaces (Fig. 2). The wheel, itself,

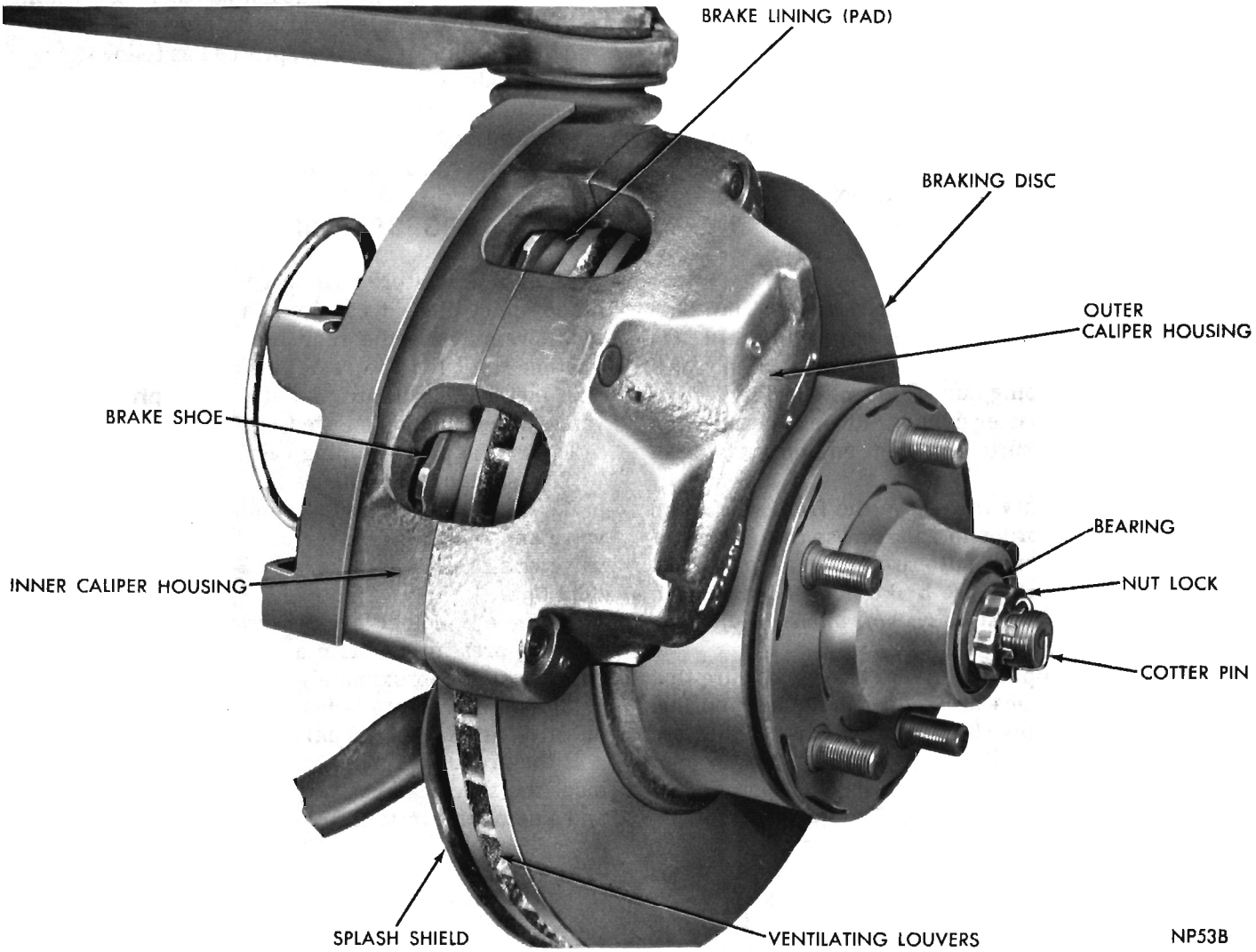

Fig. 1—Disc Brake Assembly

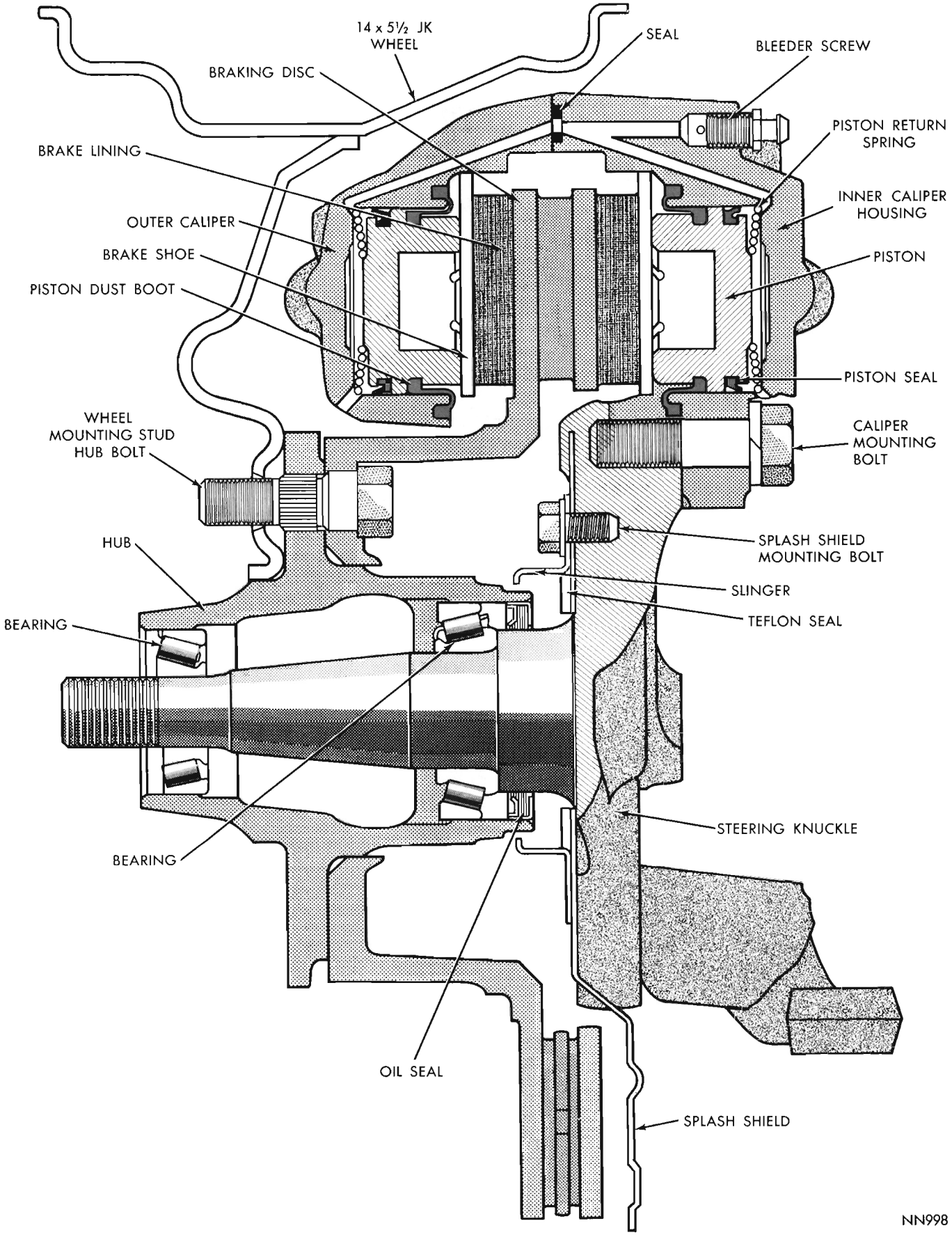

Fig. 2—Disc Brake Assembly (Sectional View)

provides protection for the outboard surface of the disc.

The brake disc is mounted on the front wheel hub by five bolts and is straddled by the caliper which is attached to the steering knuckle by two bolts. Inserted between the piston and the disc are shoe and lining assemblies, which are held in position by parallel machined abutments within the caliper, (Fig. 17).

Operation

As the brake pedal is depressed, the hydraulic pressure exerted in the system loads the pistons, clamping the disc between the brake shoe pads with equal and opposite force. When the brake pedal is released, the hydraulic pressure is reduced and the pistons relax. The compressed piston return spring positions the brake shoes lightly against the disc, ready for the next application.

The disc brake, having small friction segments operates on a small area of the braking disc surface, leaving a large proportion of the disc exposed to the atmosphere which allows a maximum dissipation of heat. The disc brake provides consistent performance even on frequent stops from high speed (Fig. 3).

The disc brake automatically compensates for normal wear, since brake shoe lining brushes lightly against disc when brakes are not in use. Thus no adjustments are required. However, periodical inspection should be made to insure that lining does not wear too thin. The shoes and lining should be replaced when lining has worn to .030 inch. The rate and type of wear will vary considerably with driving conditions.

The large diameter of the caliper pistons uses considerably more volume of fluid as compared to the drum type servo brakes, and therefore it is necessary to check the master cylinder fluid level more frequently. A dual tandem master cylinder is provided with this system to enable driver to stop vehicle in event of a failure of either front or rear brakes.

The hydraulic system contains a proportioning valve (rear brakes only) and a rear brake residual pressure check valve. The proportioning valve is mounted on the inside frame rail along with a brake line tube tee.

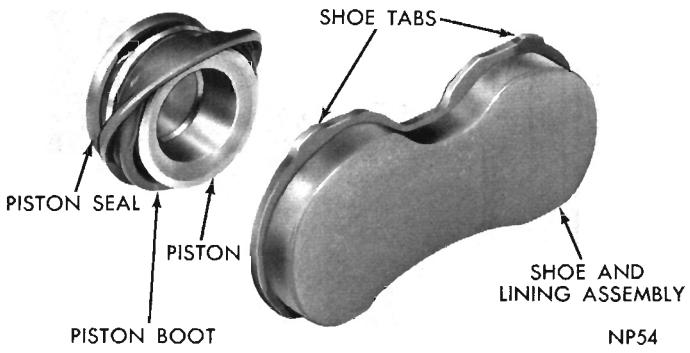

Fig. 3—Disc Brake Piston, Shoe and Lining Assembly

There is no hydraulic pressure to the calipers when brakes are not applied because there is no residual pressure maintained in front brake system. (See Master Cylinder.) The proportioning valve (Fig. 19) provides balanced braking action between the front and rear brakes under a wide range of braking conditions. The valve regulates the hydraulic pressure applied to the rear wheel cylinders, thus limiting rear braking action when high pressures are required at the front brakes. In this manner, premature rear wheel skid is prevented.

DISC BRAKE SERVICE PRECAUTIONS

Check Brake Lines and Linings

Raise all four wheels. Remove one of the front wheel and tire assemblies and inspect the braking disc, caliper and linings. (The wheel bearings should be inspected at this time and repacked if necessary.) **The caliper must be removed to inspect and pack the inner wheel bearing.**

Do not get oil or grease on the disc or the linings. If the linings are worn to within .030 inch of the surface of the shoe, replace both sets of shoe and lining assemblies (inboard and outboard) on the front wheels. It is recommended that both front wheel sets be replaced whenever a respective shoe and lining is worn or damaged. Inspect, and if necesssary, replace rear brake linings also.

If the caliper is cracked or fluid leakage through the casting is evident, it must be replaced as a unit.

Shoe and Lining Wear

If a visual inspection does not adequately determine the condition of the lining, a physical check will be necessary.

To check the amount of lining wear, remove the wheel and tire assembly, the caliper assembly from knuckle then remove the shoe and lining assemblies (see "Brake Shoe Removal" paragraph). Three (3) thickness measurements with a micrometer should be taken across the middle section of the shoe and lining; one reading at each side and one reading in the center. When a shoe and lining assembly has worn to a thickness of .180 inch, it should be replaced. If shoes do not require replacement, reinstall making sure to replace in their original inner and outer positions (see "Brake Shoe Installation" paragraph).

Brake Roughness

The most common cause of brake chatter on disc brakes is a variation in thickness of disc. If roughness or vibration is encountered during highway operation or if pedal pumping is experienced at low speeds, the disc may have excessiye thickness variation. To check for this condition, measure the disc at 12

(twelve) points with a micrometer at a radius approximately one inch (1″) from edge of disc. If thickness measurements vary by more than .0005 inch the disc should be replaced with a new one.

Excessive lateral runout of the braking disc may cause a "knocking back" of the pistons, possibly creating increased pedal travel and vibration when the brakes are applied.

Before checking the runout, the wheel bearing end play should be eliminated by tightening the adjusting nut. **The readjustment is very important and will be required at the completion of the test to prevent bearing failure.** After tightening the adjusting nut, be sure that the braking disc can still be rotated.

Dial indicator C-3339 should be clamped to the steering knuckle so that the stylus contacts the braking disc at a point approximately one (1) inch from the outer edge, (Fig. 18). Rotate the disc and check the indicator reading. The maximum total indicator reading on the gauge should not exceed .005 inch. If the reading exceeds this specification, the disc should be replaced. **Do not attempt to refinish a disc that indicates runout in excess of the specification.**

(1) Grease or any other foreign material must be kept off the caliper assembly, surfaces of the braking disc and external surfaces of the hub, during service procedures. Handling the braking disc and caliper should be done in a way to avoid deformation of the braking disc and nicking or scratching the brake linings.

(2) If inspection reveals the rubber piston seals are worn or damaged, they should be replaced immediately.

(3) During removal and installation of a wheel and tire assembly, exercise care so as not to interfere with or damage the caliper splash shield, the bleeder screw or the transfer tube.

(4) The front wheel bearing end play is important and must be within specifications.

(5) Be sure the vehicle is centered on the hoist before servicing any of the front end components to avoid bending or damaging the disc splash shield on full right or left wheel turns.

(6) Before the vehicle is moved after any brake service work, **be sure and obtain a firm brake pedal.**

(7) The assembly bolts of the two caliper housings should not be disturbed, unless the servicing of the caliper assembly is required.

(8) **Riding the brake pedal** (common left foot application) should be avoided during vehicle operation.

(9) The wheel, tire, hub and disc assembly **cannot** be removed as an assembly. The caliper assembly must be removed before the removal of the hub and disc assembly.

14 x 5-1/2 JK wheels are used on disc brake equipped vehicles.

SERVICE PROCEDURES

BRAKE SHOE REMOVAL (Fig. 1)

(1) Raise car on hoist or jackstands.

(2) Remove wheel covers and wheel and tire assemblies.

(3) Remove bolts that attach caliper assembly to steering knuckle (Fig. 4).

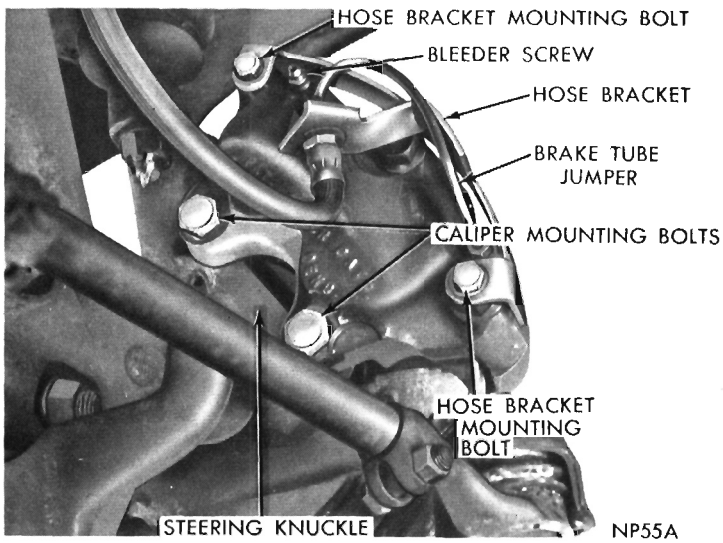

Fig. 4—Caliper Assembly Mounting Bolts

(4) Remove caliper from disc by slowly sliding caliper assembly up and away from braking disc (Fig. 5).

(5) Carefully remove brake shoe and lining assembly, (one at a time through bottom opening.) (Fig. 6.)

CLEANING AND INSPECTION

Check for piston seal leaks (evident by fluid mois-

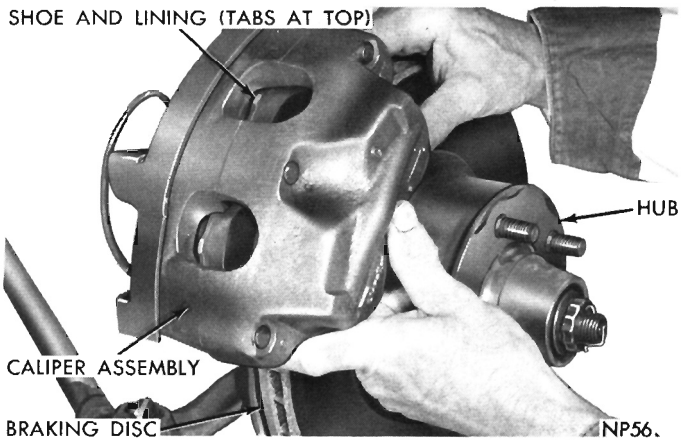

Fig. 5—Removing or Installing Caliper Assembly

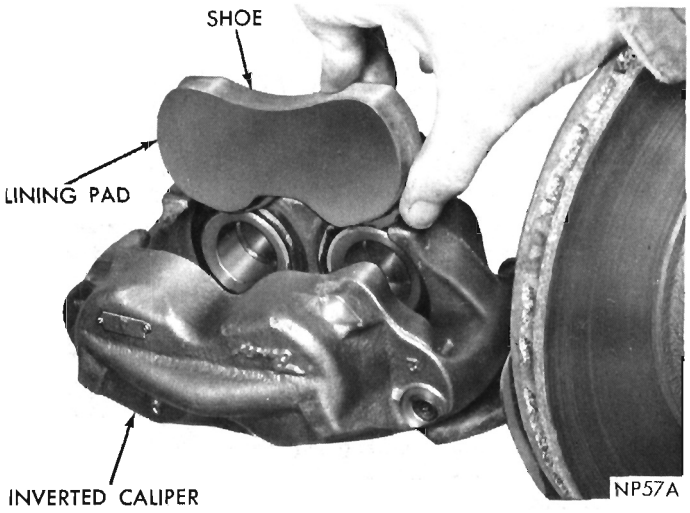

Fig. 6—Removing or Installing Brake Shoe and Lining

ture around cavity) and for any ruptures of piston boot. Wipe cavity clean (between inner and outer caliper housings) with a shop towel. Check piston boot for proper seating in piston groove and in caliper groove. (Fig. 8). If fluid moisture is evident, it will be necessary to disassemble caliper assembly and install new piston seals and boots. (Refer to "Disassembling Caliper" Paragraph.)

BRAKE SHOE INSTALLATION (Fig. 6)

(1) Slide disc brake shoe and lining assemblies into position in caliper assembly (one at a time), with curved portion (with tabs) entering first and metal shoe against open ends of pistons. Using fingers, spread linings apart until pistons are seated in their bores.

(2) Slide caliper assembly down into position over brake disc and align mounting holes. (As caliper is being lowered, be sure that lining slides easily along braking disc.

(3) Install caliper mounting bolts and tighten 75-105 foot-pounds.

(4) Make sure disc rotates freely and with minimum drag.

(5) Install wheel and tire assemblies and wheel covers.

(6) Remove jackstands or lower hoist.

CAUTION: Road test vehicle and make several stops to wear off any foreign material on brakes and to seat linings. The vehicle may pull to one side or other if this is not done.

REMOVING CALIPER

(1) Raise car on hoist or jackstands.

(2) Remove wheel covers, wheel and tire assemblies. Disconnect brake line at the caliper housing and install a 3/8-24 plug in tube opening.

(3) Remove bolts that attach hose bracket to caliper. (Fig. 4.)

(4) Remove bolts that attach caliper assembly to steering knuckle. (Fig. 4.)

(5) Remove caliper from disc by slowly sliding caliper assembly up and away from braking disc.

(6) Remove lining pads. Remove caliper to bench for disassembly.

DISASSEMBLING CALIPER (Fig. 7)

(1) Drain caliper, then place caliper assembly in a vise. Remove bolts that hold two halves of caliper together.

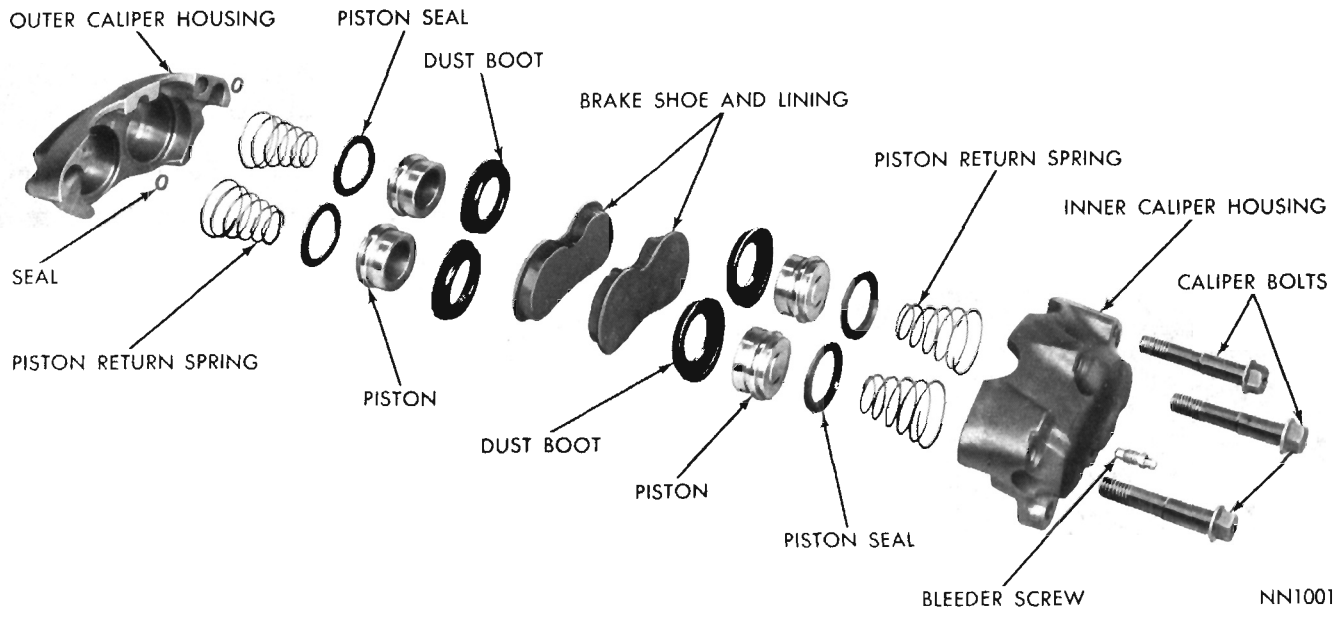

Fig. 7—Caliper Assembly (Exploded View)

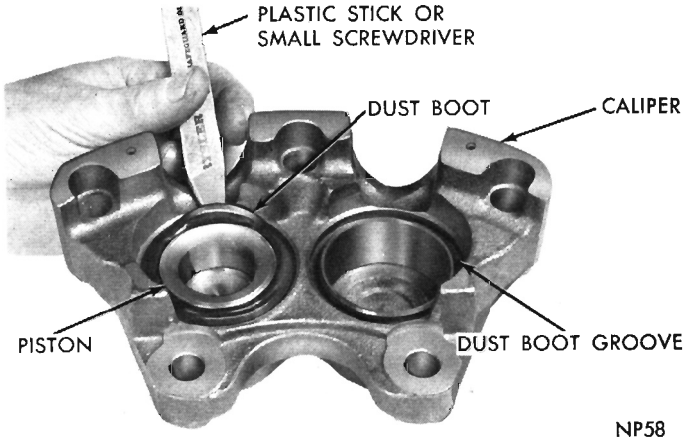

Fig. 8—Removing Piston Dust Boot

(2) Separate halves and remove two crossover seals.

(3) Using a small screwdriver, pry out exposed dust boot out of groove (Fig. 8). Be sure and hold piston compressed during this operation.

(4) Remove piston, piston seal and dust boot from caliper (Fig. 9). Remove piston return spring.

(5) Remove piston dust boot by grasping edge and pulling out of its groove (Fig. 10).

(6) Using fingers, roll piston seal out of its groove in piston. (Fig. 11). Discard seal.

(7) Remove remaining three pistons in same manner.

(8) Remove bleeder screw from inner caliper housing.

CLEANING AND INSPECTION

Clean all parts in alcohol; wipe dry, using clean lint free shop towels. Using an air hose, blow out drilled passages and bores. Check dust boots for punctures or tears. If punctures or tears are evident, new boots should be installed at reassembly. Inspect piston bores in both housings for scoring or pitting. Bores that show light scratches or corrosion, can usually be cleaned with crocus cloth. However, bores that have deep scratches or scoring may be honed, using Tool C-3993, providing the diameter of the bore is not increased more than .002 inch. If the bore does not clean up within this specification, a new caliper housing should be installed. (Black stains on the bore walls are caused by the piston seals and will do no harm.) **When using hone C-3993 (Fig. 12) be sure and install the hone baffle before honing bore. The baffle is used to protect the hone stones from damage.**

Use extreme care in cleaning the caliper after honing. Remove all dust and grit by flushing the caliper with alcohol; wipe dry with a clean lintless cloth and then clean a second time in the same manner.

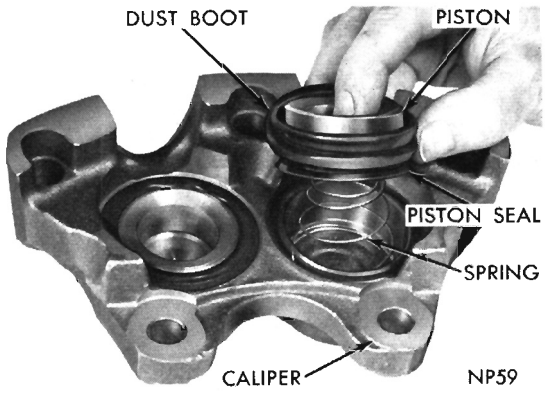

Fig. 9—Removing Piston, Boot, Seal and Return Spring

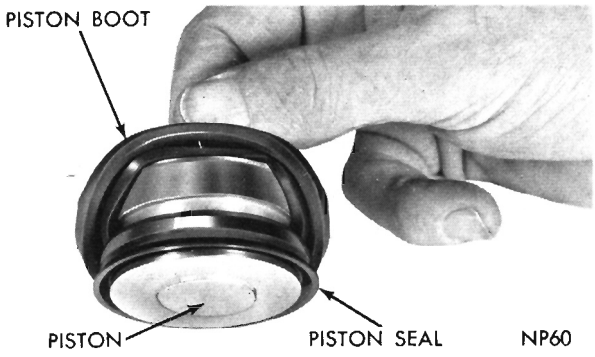

Fig. 10—Removing or Installing Piston Boot

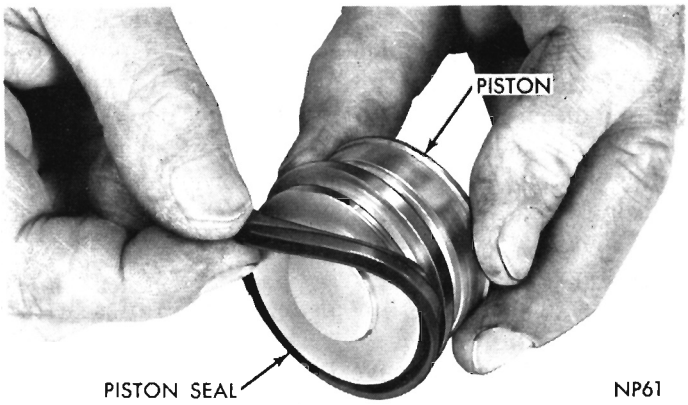

Fig. 11—Removing or Installing Piston Seal

ASSEMBLING CALIPER (Fig. 7)

(1) Clamp caliper housing in a vise, and coat

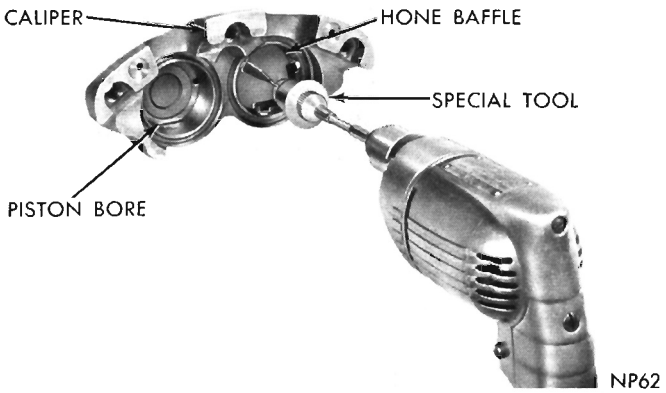

Fig. 12—Honing Piston Bore

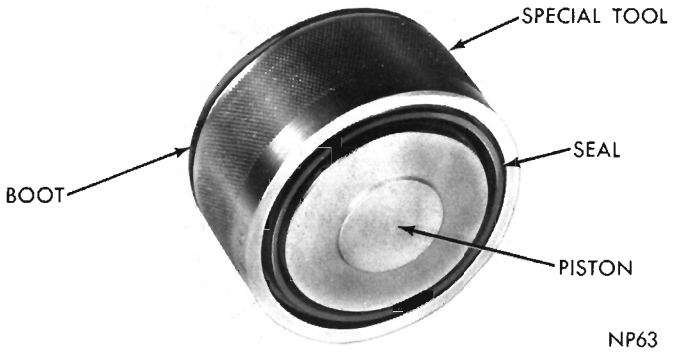

Fig. 13—Piston and Seal Installing Tool

cylinder bores with #55 Dow-Corning Pneumatic Silicone Grease (or equivalent) then install piston return spring. (Be sure spring is seated in recess at bottom of bore.) (Fig. 9.) (Large diameter down.)

(2) Coat outside diameter and fill inner diameter of a new piston seal with #55 Dow-Corning Pneumatic Silicone Grease (or equivalent) and work over piston land and down into position in groove, using fingers only. (Fig. 11).

(3) Install dust boot on piston with lip of seat toward piston (Fig. 10).

(4) Using tapered sleeve Tool C-4031, install piston, seal and boot into sleeve, with lip of seal towards taper. Push **in** on assembly until seal lip is even with knife edge of sleeve. (Fig. 13).

(5) Place installing tool over bore opening and return spring. Index with boot groove in caliper. (Fig. 14). Press down on piston, sliding piston out of tool and into caliper bore until bottomed. Remove sleeve.

(6) Position piston boot sealing lip over groove evenly. Using Tool C-4030, press down on tool, forcing boot sealing lip into caliper groove. (Fig. 15). Remove tool. Install remaining pistons in same manner. (Fig. 16).

(7) Test pistons for smooth operation in their bores by depressing with fingers.

(8) Lightly clamp outer caliper half in vise and install new crossover passage seals in position in recess of caliper mating surface. (Fig. 16).

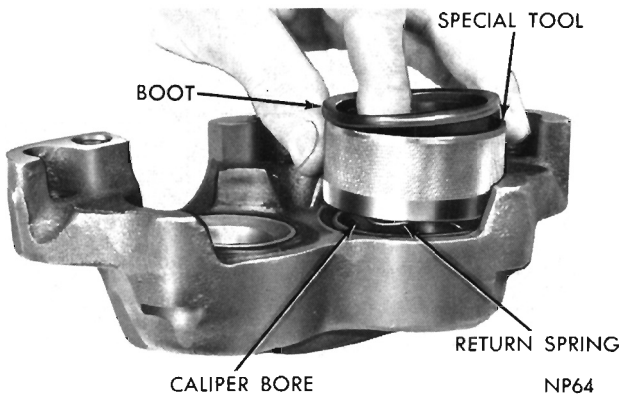

Fig. 14—Installing Piston, Seal and Boot

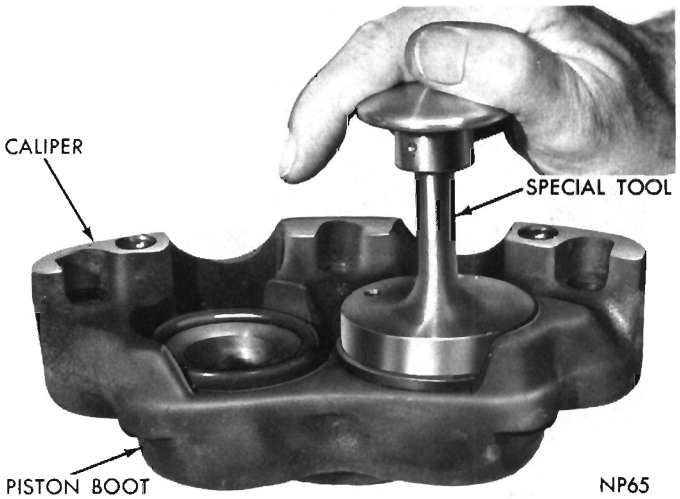

Fig. 15—Installing Piston Boot in Caliper Groove

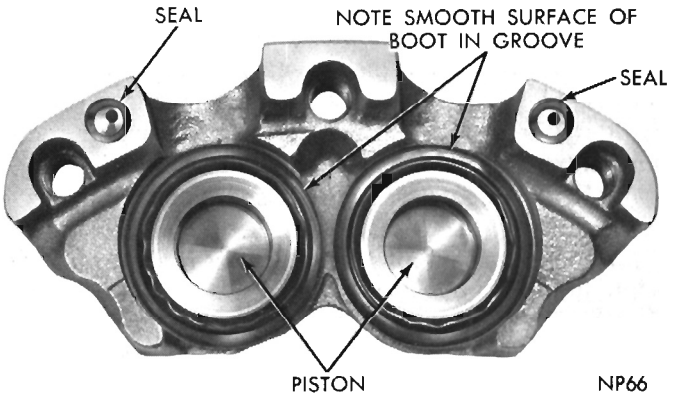

Fig. 16—Pistons and Boots Installed in Caliper

(9) Place mating caliper half over one clamped in vise and install attaching bolts. Tighten from 120 to 140 foot-pounds.

(10) Install brake shoes in caliper assembly with curved portion (with tabs) entering first and metal shoe against open ends of pistons. Using fingers, spread linings apart until pistons are seated in their bores. (Fig. 17).

(11) Install bleeder screw and tighten lightly.

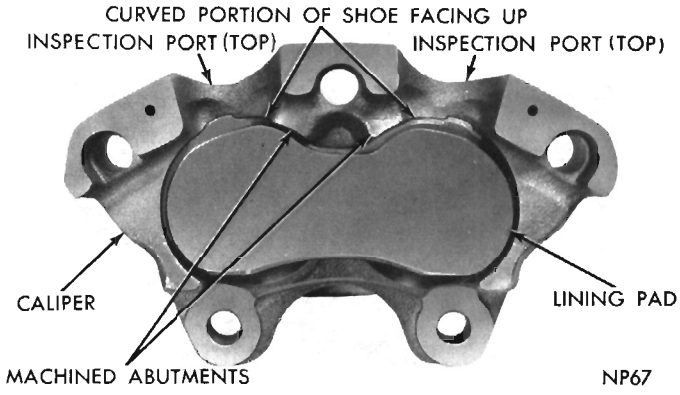

Fig. 17—Shoe and Lining Correctly Installed in Caliper

INSTALLING CALIPER

Before installing caliper assembly over brake disc, check disc for runout. Mount a dial indicator (Fig. 18) and check lateral runout. Runout should not exceed .005 inch.

(1) Install caliper assembly over disc and align mounting holes. Install mounting bolts and tighten to 85 foot-pounds. (As caliper is being lowered into place, be sure that lining rides freely over disc.)

(2) Reconnect brake line at caliper housing then position brake hose bracket. Install bracket and attaching bolts and tighten securely. Follow normal bleeding procedure. (Be sure all air bubbles have escaped.) Replenish brake fluid in master cylinder.

(3) Install wheel and tire assembly and wheel covers.

(4) Remove jackstands or lower hoist.

CAUTION: Road test the vehicle and make several stops to wear off any foreign material on the brakes and to seat linings. The vehicle may pull to one side or the other if this is not done.

REMOVING BRAKING DISC AND HUB

(1) Remove wheel cover and wheel and tire assembly.

(2) Remove caliper assembly as described under "Brake Shoe Removal."

(3) Remove grease cup, cotter pin, nut lock, nut, thrust washer and outer wheel bearing.

(4) Pull hub and disc off spindle.

Removing Wheel Stud from Hub

(1) Remove damaged stud, using an arbor press.

(2) Install new stud in position and press into place.

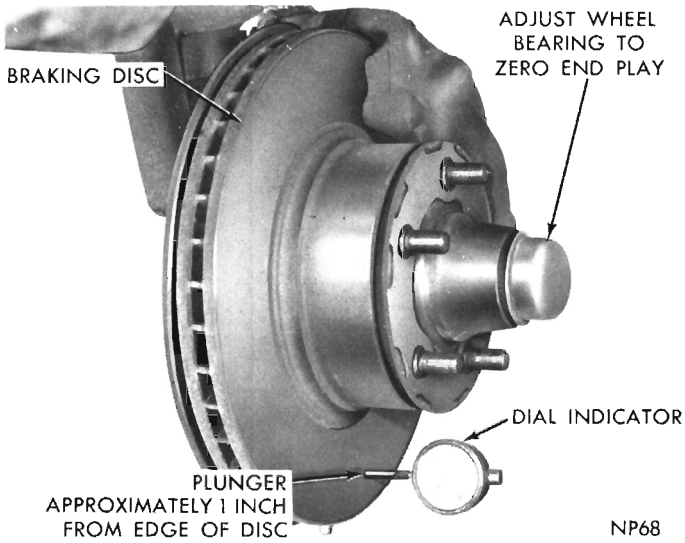

Fig. 18—Checking Braking Disc for Run-out

INSTALLING BRAKING DISC AND HUB

(1) Slide brake hub and disc assembly on spindle.

(2) Install outer bearing, thrust washer, and nut.

(3) Tighten wheel bearing adjusting nut to 90 inch-pounds while rotating hub and disc.

(4) Position lock nut on nut with one pair of slots in line with cotter pin hole.

(5) Back off adjusting nut and lock assembly one slot then install cotter pin. The resulting adjustment should be zero (no preload) to .003 inch end play. (This is very important, when checking disc runout.)

(6) Install a dial indicator C-3339 (Fig. 18) and check runout of disc outer surface. The runout should not exceed .005 inch.

(7) Clean grease cap, coating inside with wheel grease (do not fill) and install the cap.

(8) Install caliper assembly as described in "Brake Shoe Installation."

(9) Install wheel and tire assembly and wheel cover.

(10) Remove jackstands or lower hoist.

(11) Road test vehicle as described in "Installing Caliper."

Refacing Braking Disc

The surface of disc should be smooth. The light scoring and grooving which appear after normal use are not detrimental to operation of brake. A heavily scored disc will impair efficiency and increase lining pad wear, and should be replaced with a new disc and hub assembly. **DO NOT ATTEMPT TO REFACE BRAKING DISC DUE TO CLOSE TOLERANCES REQUIRED. THIS IS IMPORTANT!**

BLEEDING DISC BRAKE

The disc brake hydraulic system can be bled manually or with pressure bleeding equipment. On disc brake equipped vehicles, the brake pedal will require more pumping, and frequent checking of the fluid level in the master cylinder during the bleeding operation. **Never use brake fluid that has been drained from the hydraulic system, when bleeding the brakes.**

On vehicles equipped with disc brakes, be sure that the disc brake pistons are returned to their normal positions and that the shoe and lining assemblies are properly seated.

Before driving the vehicle, check the operation of the brakes to be sure that a firm pedal has been obtained.

(1) Raise vehicle using a hoist or jackstands.

(2) Bleed brakes in usual manner, starting with right rear, then proceeding to left rear, right front and left front in order.

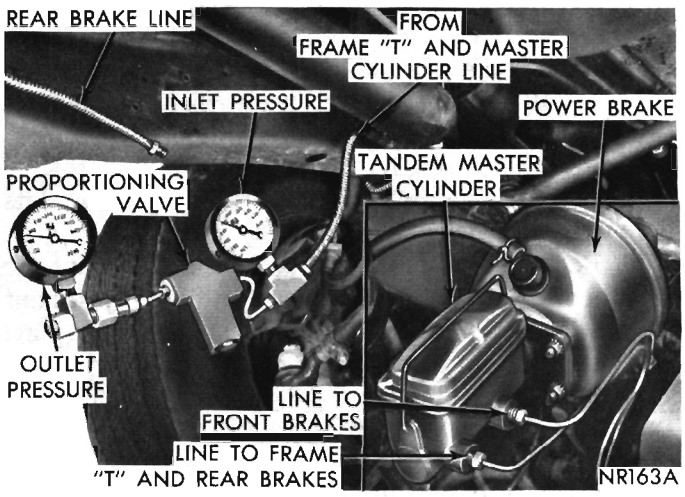

Fig. 19—Checking Proportioning Valve

After bleeding the brakes, proceed as follows:

(1) Remove jackstands or lower hoist.

(2) Test drive vehicle to be sure brakes are operating correctly and that pedal is solid.

TESTING PROPORTIONING VALVE

When a premature rear wheel slide is obtained on brake application, it usually is an indication that the fluid pressure to the rear brakes is above the 50% reduction ratio for the rear line pressure and that a malfunction has occurred within the proportioning valve, which should be tested.

To test the proportioning valve, proceed as follows:

(1) Install one of Gauge Set C-4007 and "T" in brake line between master cylinder and proportioning valve and remaining Gauge and "T" at output end of proportioning valve and brake line. (Fig. 19). **Be sure all joints are fluid tight.**

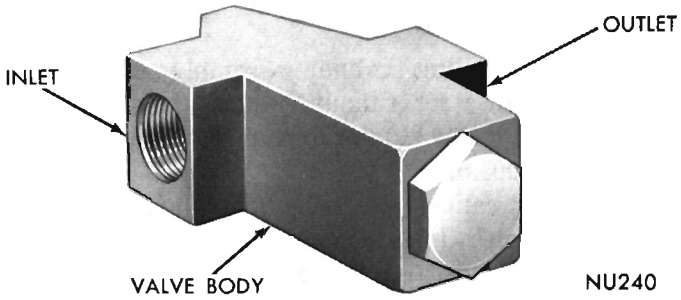

Fig. 20—Proportioning Valve

(2) Have a helper exert pressure on brake pedal (holding pressure). Obtain a reading on master cylinder output of approximately 500 p.s.i.

(3) While pressure is being held as above, reading on valve outlet Gauge should be 360-405 p.s.i.

If proportioning valve pressure readings do not meet specifications, the valve should be removed and a new valve installed.

Balancing Front Wheels (Disc Brake Equipped Vehicles)

To balance front wheels on a disc brake equipped vehicle, the normal procedure for static balancing as described under "Wheel Balance" in the Wheels, Bearings and Tires Section of this manual should be followed. Dynamic balancing of front wheels can be accomplished by the normal procedure when wheels are removed from the vehicle, but Manufacturer's recommendations should be followed closely when attempting to balance wheels while on the vehicle.

KELSEY-HAYES DISC BRAKE (FLOATING CALIPER)

INDEX

	Page
Assembling Caliper	51
Bleeding Disc Brake	43
Brake Shoe Installation	48
Brake Shoe Removal	48
Cleaning and Inspection	48-51
Checking Braking Disc for Run-out and Thickness	52
Disassembling Caliper	49
Disc Brake Service Precautions	48
General Information	44
Installing Brake Disc and Hub	53
Installing Caliper	52
Metering Valve	47
Refinishing (Refacing) Braking Disc	54
Removing Braking Disc and Hub	53
Removing Caliper from Vehicle	49
Routine Maintenance—30,000 Miles	47
Service Diagnosis	29
Specifications	64

GENERAL INFORMATION

The Kelsey-Hayes single piston, floating caliper disc brake assembly (Fig. 1), consists of the hub and disc assembly, the caliper, shoe and linings, splash shield and adaptor.

The cast iron braking disc has 40 (forty) cooling fins (or louvres) that are cast integrally between the two machined braking surfaces (Fig. 2). When the wheel is in motion, the rotation of the disc cooling

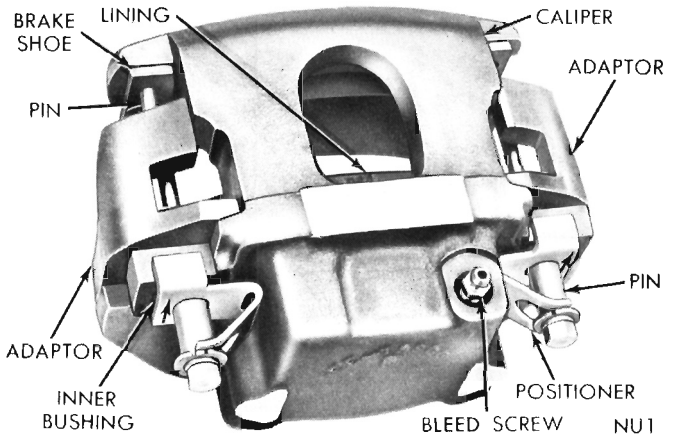

Fig. 1—Floating Caliper Assembly (Single Piston)

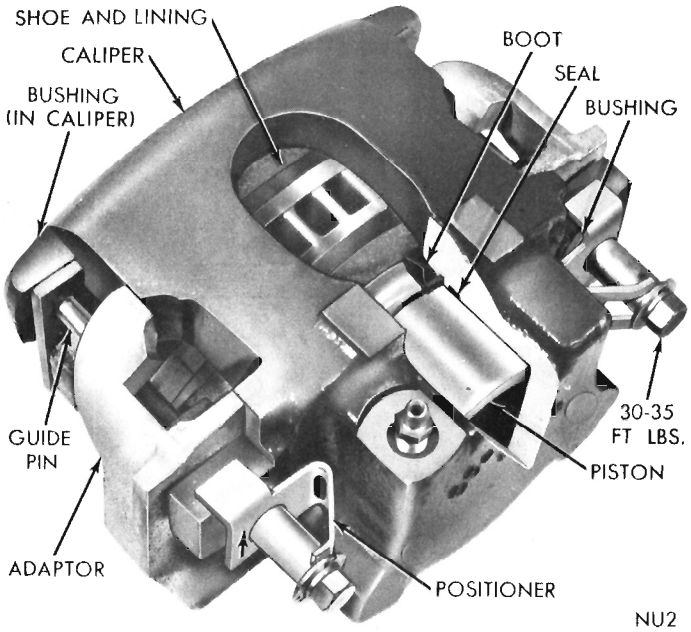

Fig. 2—Floating Caliper Assembly (Sectional)

fins supplies air circulation between the braking surfaces for efficient cooling of the disc and prolonged lining life. The braking disc is protected from road splash (inboard side) by a shield bolted to the steering knuckle and by the wheel and tire on the outboard side.

The single piston caliper assembly floats through four rubber bushings on two steel guide pins threaded into the adaptor. Two of the bushings are inserted in the outboard portion of the caliper and two on the inboard side (Fig. 3). Four machined abutments on the adaptor, position and align the caliper, fore and aft. Two positioners installed over the guide pins, control the movement of the caliper along with the piston seal, and assists in maintaining proper shoe clearance and are also required to hold the inner bushing in place.

The guide pins are also used to radially locate and

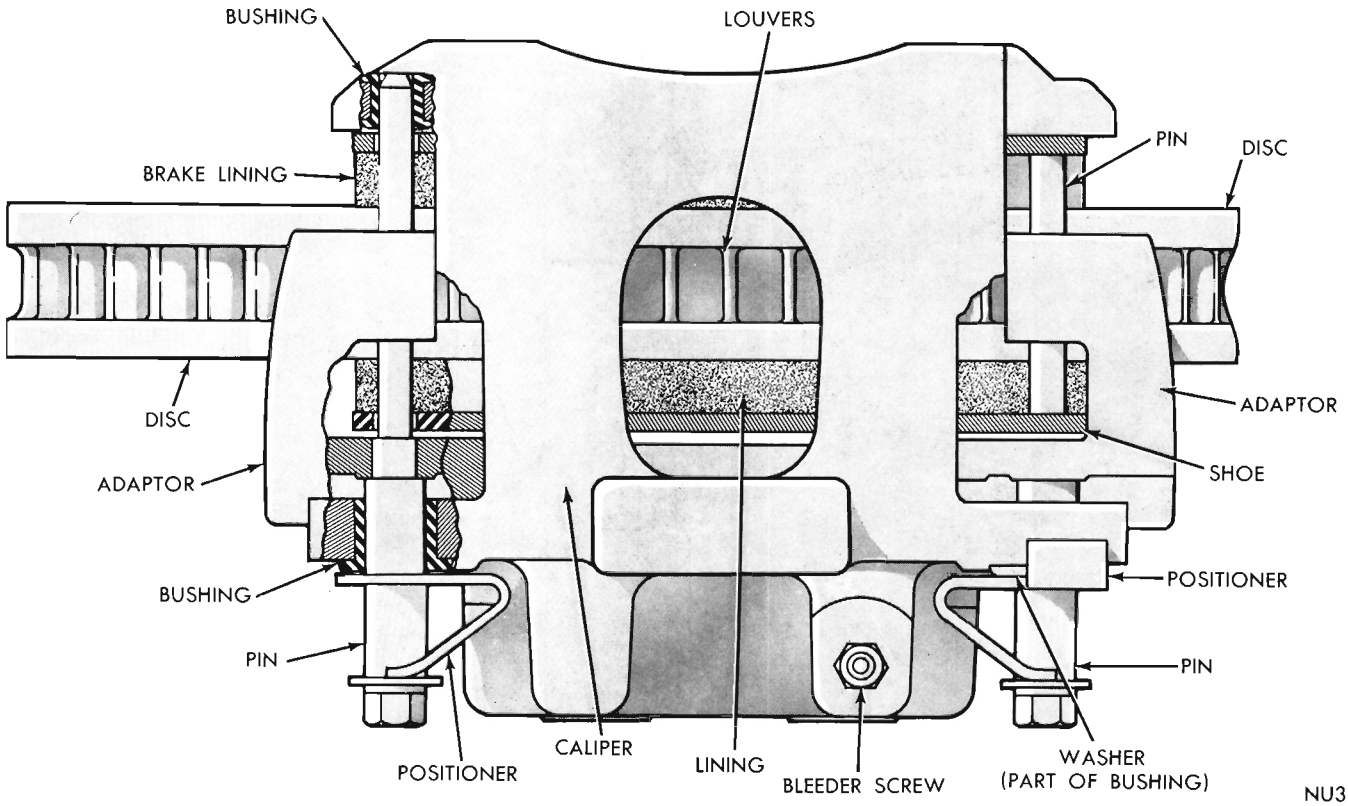

Fig. 3—Floating Caliper Assembly (Sectional) Shoe Mounting

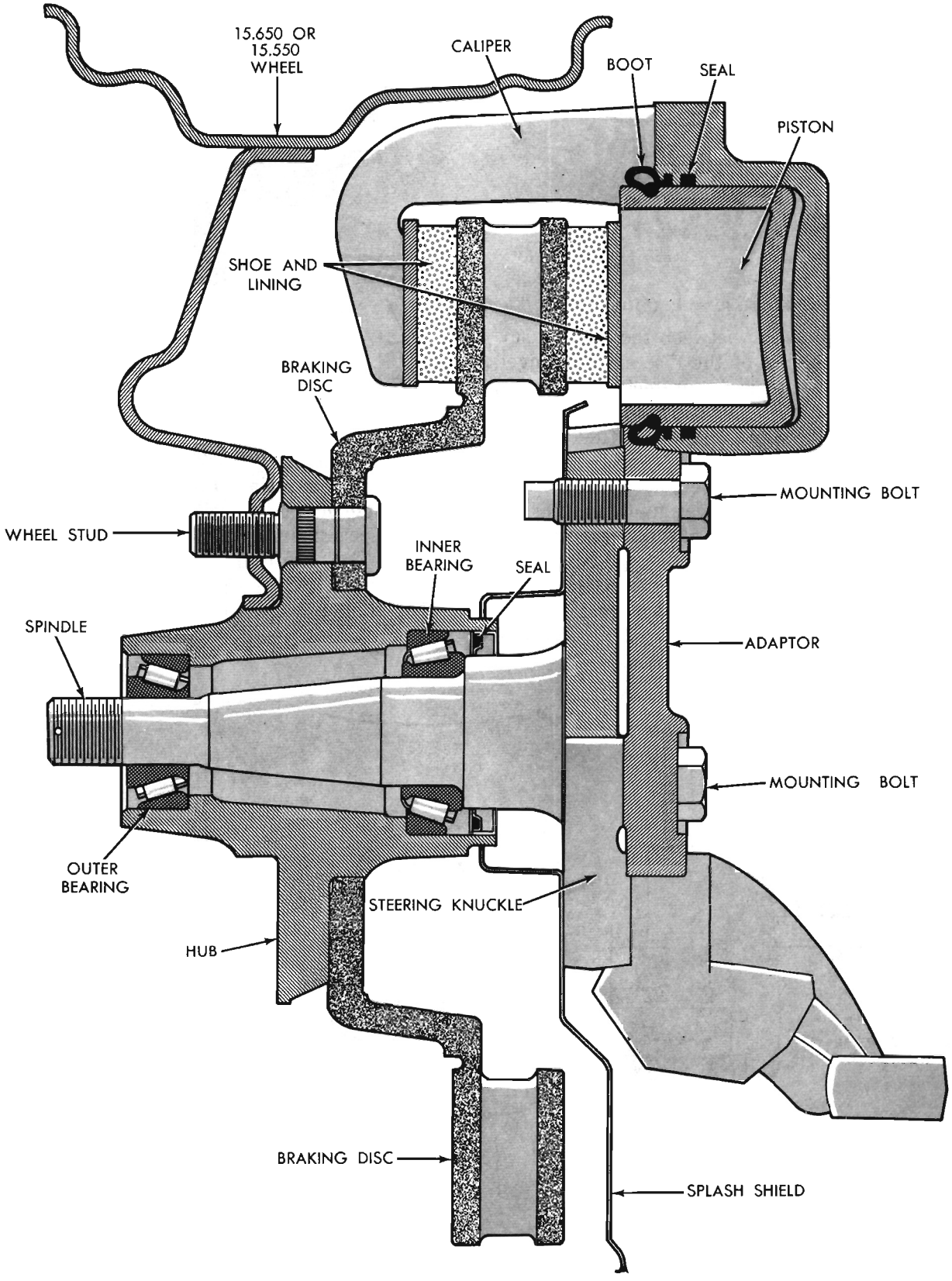

Fig. 4—Disc Brake Assembly (Sectional)

restrain both shoes, while all of the braking force is taken by the caliper on the outboard shoe and machined lug (Fig. 9) on the adapter for the inboard shoe.

The caliper is a one piece casting with the inboard side containing the single piston cylinder bore. The steel piston is 2-3/4 inches in diameter and is nickle and chrome plated for anti-corrosion and long wear. The square cut rubber piston seal is located in a machined groove in the cylinder bore and provides a hydraulic seal between the piston and the cylinder wall (Fig. 4). The adaptor is mounted to the steering knuckle by two special nylock bolts (Fig. 5).

A moulded rubber dust boot installed in a groove in the cylinder bore and piston, keeping contamination from the cylinder wall and piston. The boot has a wiping lip (Fig. 6) that prevents contamination in the bore area.

As the brake pedal is depressed, hydraulic pressure is applied against the piston. This force is transmitted to the inboard brake shoe and lining and the inboard braking surface of the disc. As force increases against the disc from the inner lining, the caliper assembly moves inboard, sliding on the guide pins, thus providing a clamping force on the disc.

When the brake pressure is released, the piston seal (distorted by applied pressure) returns to its normal position, pulling the piston back to released position, while the two positioners force the caliper outboard to create a slight running clearance between outer shoe and the disc.

Automatic adjustment is obtained by outward relocation of the piston as the inboard lining wears and the inward movement of the caliper as the outboard lining wears, thus maintaining correct adjustment at all times.

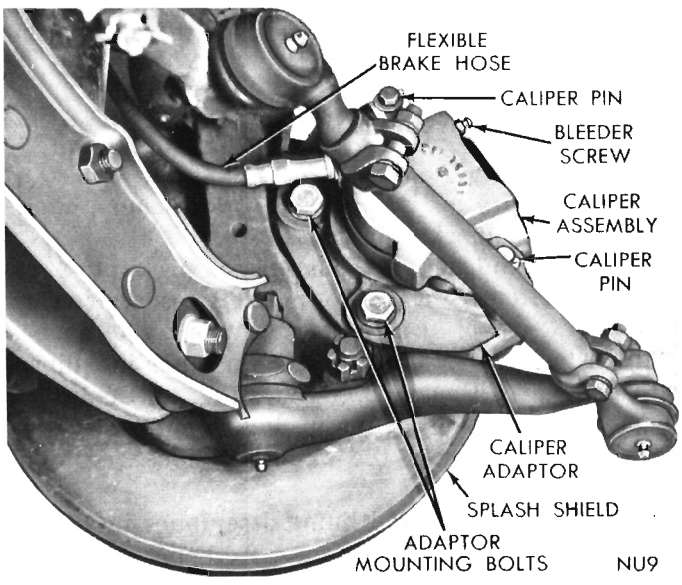

Fig. 5—Disc Brake Caliper Mounting

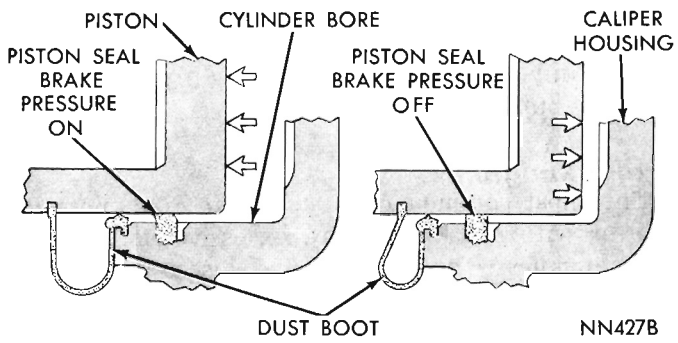

Fig. 6—Piston Seal Function for Automatic Adjustment

METERING VALVE

All Kelsey-Hayes Floating Caliper disc brake equipped vehicles are equipped with a pressure metering valve. The valve is located on the left frame rail, directly under the battery tray. The use of the metering valve is to better match the front disc brakes with the rear drum brakes on the vehicle. This results in improved braking and steering control on icy surfaces.

ROUTINE MAINTENANCE—30,000 Miles

Check Brake Lines, Hoses and Linings

Raise all four wheels. Remove one of the front wheel and tire assemblies and inspect the braking disc, linings and caliper. Inspect front brake flexible hose for signs of cracking or deterioration. (The wheel bearings should be inspected at this time and repacked if necessary). **The caliper assembly must be removed in order to inspect the inner wheel bearing.** (Refer to "Brake Shoe Removal" paragraph.)

Do not get oil or grease on the braking disc or linings. If the linings (pads) are worn to within .030 inch of the shoe, replace both sets of shoe and lining assemblies, (inboard and outboard) on the front wheels. It is necessary that both front wheel sets be replaced whenever a respective shoe and lining is worn beyond specifications or damaged.

Check all brake tube connections for possible leaks. Install new flexible hoses as required.

Shoe and Lining Wear

If a visual inspection does not adequately determine the condition of the lining, a physical check will be necessary. To check the amount of lining wear, remove the wheel and tire assemblies, and the calipers. Remove the shoe and lining assemblies. (See "Brake Shoe Removal" paragraph). Three (3) thickness measurements with a micrometer should be taken across the center of the shoe and lining; One reading at each end and one reading in the center. When an assembly has been worn to a thickness of .180 inch, it should be replaced. If a shoe and lining does not require replacement, reinstall, making sure each shoe and posi-

tioner is returned to their original positions. (See "Brake Shoe Installation" paragraph). It is normal for the inboard lining to show slightly more wear than the outboard.

Brake Roughness

The most common cause of brake roughness (or chatter with disc brakes are excessive variation in disc thickness and/or excessive disc face runout. These can be easily checked with a dial indicator and a 2" micrometer (vernier type preferred). If either of the measurements are out of specification, the disc must be refinished or replaced. Refer to "Refinishing (Refacing) Braking Disc paragraph.

Other less prevalent causes of roughness can be the use of some types of non-standard lining and extreme abrasion of the disc faces. Also, vehicles which stand unused for periods of time in areas of high humidity or salt air may incur rust on the disc which could cause a temporary brake surge and roughness. Normally however, this condition should correct itself after a short period of usage.

DISC BRAKE SERVICE PRECAUTIONS

(1) Grease or any other foreign material must be kept off the caliper assembly, surfaces of the braking disc and external surfaces of the hub, during service procedures. Handling the braking disc and caliper should be done in such a way as to avoid deformation of the disc and scratching or nicking the brake linings (pads).

(2) If inspection reveals that the square sectioned caliper piston seal is worn or damaged, it should be replaced immediately.

(3) During removal and installation of a wheel and tire assembly, use care not to strike the caliper.

(4) The front wheel bearing end play is important and must be within specifications.

(5) Be sure vehicle is centered on the hoist before servicing any of the front end components to avoid bending or damaging disc splash shield on full right or left hand turns.

(6) Before vehicle is moved after any brake service work, **be sure and obtain a firm brake pedal.**

(7) Dragging the brakes (common result of left foot application) should be avoided during vehicle operation.

(8) The wheel, tire, hub and disc assembly **cannot** be removed as an assembly. The caliper assembly must be removed before removal of the hub and disc assembly.

(9) As lining wears, reservoir level will go down. If fluid has been added between relines, then reservoir overflow may occur when the piston is pushed back into the new lining position. Overflowing can be avoided in this case by removal of a small amount of fluid before overflow occurs.

SERVICE PROCEDURES

BRAKE SHOE REMOVAL

(1) Raise vehicle on a hoist or jackstands.

(2) Remove front wheel covers, and wheel and tire assemblies.

(3) Remove caliper guide pins and positioners that attach caliper to adaptor.

(4) Remove caliper from disc by slowly sliding caliper assembly out and away from braking disc (Fig. 7). Support caliper firmly so as not to damage flexible brake hose.

(5) Slide outboard shoe and lining assembly out of caliper. Slide inboard shoe and lining assembly out of adaptor (Fig. 8).

(6) Remove outer bushings from caliper by pressing out of bore (Fig. 13), using a suitable tool. Discard bushings.

(7) Slide inner bushings (flanged) off guide pins and discard. Remove positioners from guide pins and discard.

CLEANING AND INSPECTION

Check for piston seal leaks (evident by brake fluid in and around boot area and inboard lining) and for any ruptures of piston dust boot. If boot is damaged, or fluid is evident, it will be necessary to disassemble caliper assembly and install a new seal, boot, (and piston if damaged or corroded.) (Refer to "Disassembling Caliper Assembly" paragraph). Check the mating surfaces of the abutments on the caliper and adaptor. If corroded or rusty, clean surfaces with wire brush. Inspect braking surfaces of disc.

BRAKE SHOE INSTALLATION

When installing new shoe and lining assemblies, it will be necessary to also install new positioners, inner bushings and outer bushings.

(1) Slowly and carefully push piston back into bore until it is bottomed. Watch for possible reservoir overflow. See Step 9 of "Disc Brake Service Precautions".

(2) Install new inner guide pin bushings in caliper with flanged end on inboard side (Fig. 3). Compress flanges of outboard bushing in fingers and work into position in hole from the outboard side of caliper (Fig. 18).

(3) Slide new shoe and lining assemblies into position in adaptor and caliper (Fig. 8), being sure that metal portion of shoe is fully in recess of caliper and adaptor.

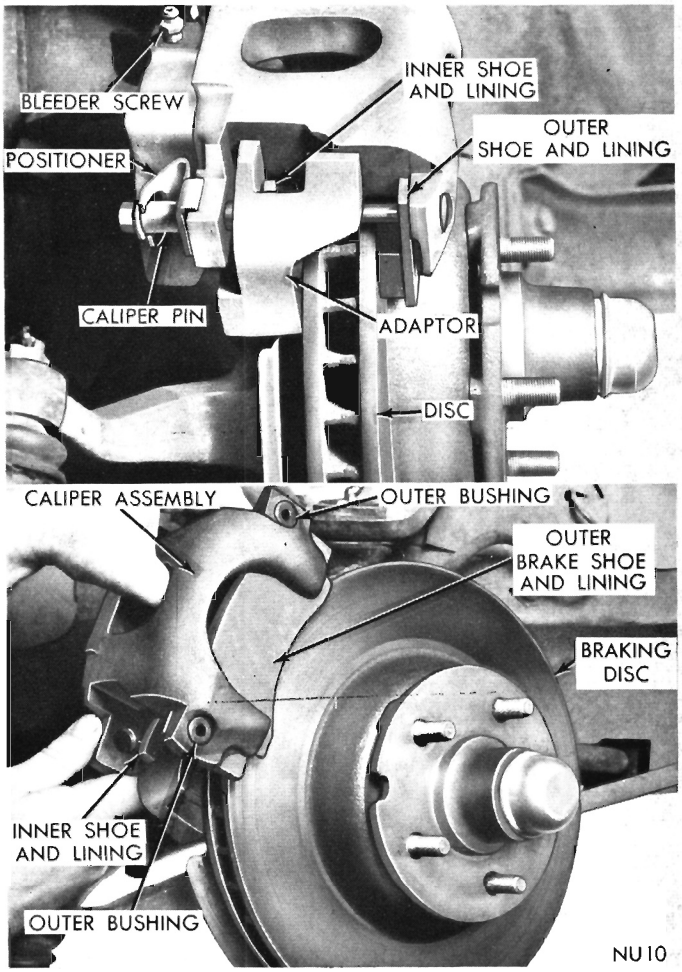

Fig. 7—Removing or Installing Caliper

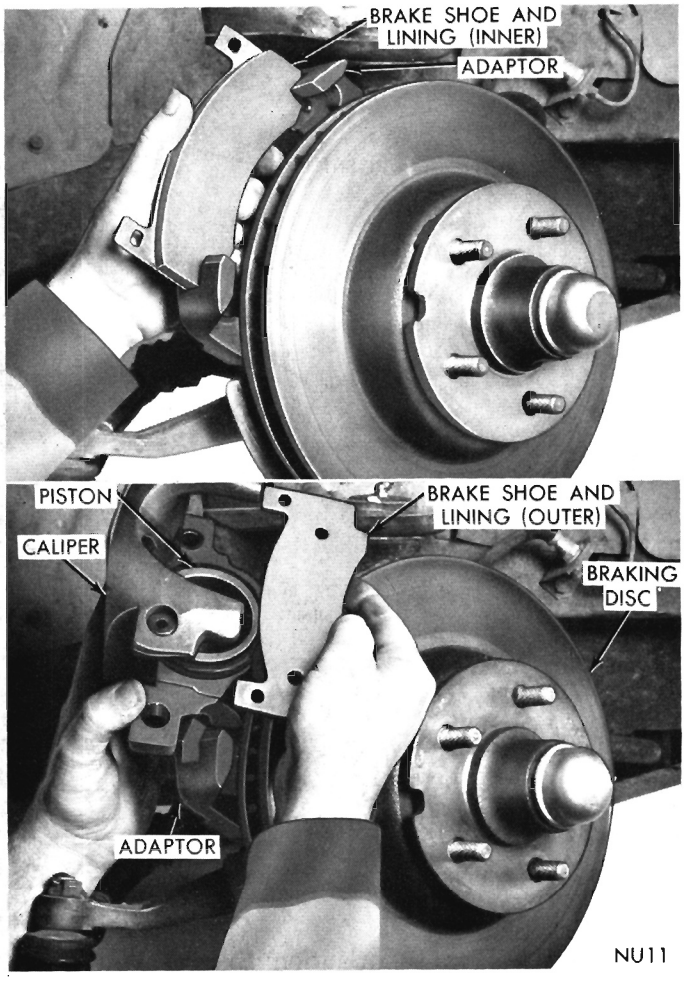

Fig. 8—Removing or Installing Brake Shoes and Lining

(4) Holding outboard lining in position, carefully slide caliper down into position in adaptor and over disc. Align guide pin holes of adapter, inboard and outboard shoes. (Fig. 3).

(5) Install new positioners over guide pins with open ends toward outside, **and with stamped arrows pointing upwards** (Fig. 1). Install assembled guide pins through bushing, caliper, adaptor, inboard and outboard shoes and into outer bushings in caliper.

(6) Press **IN** on end of guide pins and thread pin into adaptor, **USING EXTREME CARE SO AS NOT TO CROSS THREADS.** Tighten from 30 to 35 foot pounds. Be sure tabs of positioners are over machined surfaces of caliper (Fig. 1).

(7) Pump brake pedal several times until a firm pedal has been obtained.

(8) Check and refill master cylinder reservoirs (if necessary) with approved brake fluid as required. (It should not be necessary to bleed the system after shoe and lining removal and installation). However, if a firm pedal cannot be obtained bleed the brake system as described in "Bleeding Brake System" paragraph. **It may have been necessary to remove fluid to put in new linings as fluid is pushed back into master cylinder.**

(9) Install wheel and tire assemblies and wheel covers.

(10) Remove jackstands or lower hoist.

REMOVING CALIPER FROM VEHICLE

It will be necessary to remove the caliper to install a new piston seal and boot.

(1) Raise vehicle on a hoist or jackstands.

(2) Remove front wheel covers and wheel and tire assemblies.

(3) Disconnect front brake flexible hose from tube at frame mounting bracket. Plug brake tube to prevent loss of fluid. Disconnect hose from caliper.

(4) Remove guide pins and positioners that attach caliper to adaptor. Carefully slide caliper out and away from disc and adaptor, while holding outboard shoe and lining assembly. Remove inboard shoe and lining from adaptor.

DISASSEMBLING CALIPER

(1) Mount caliper assembly in a vise equipped with

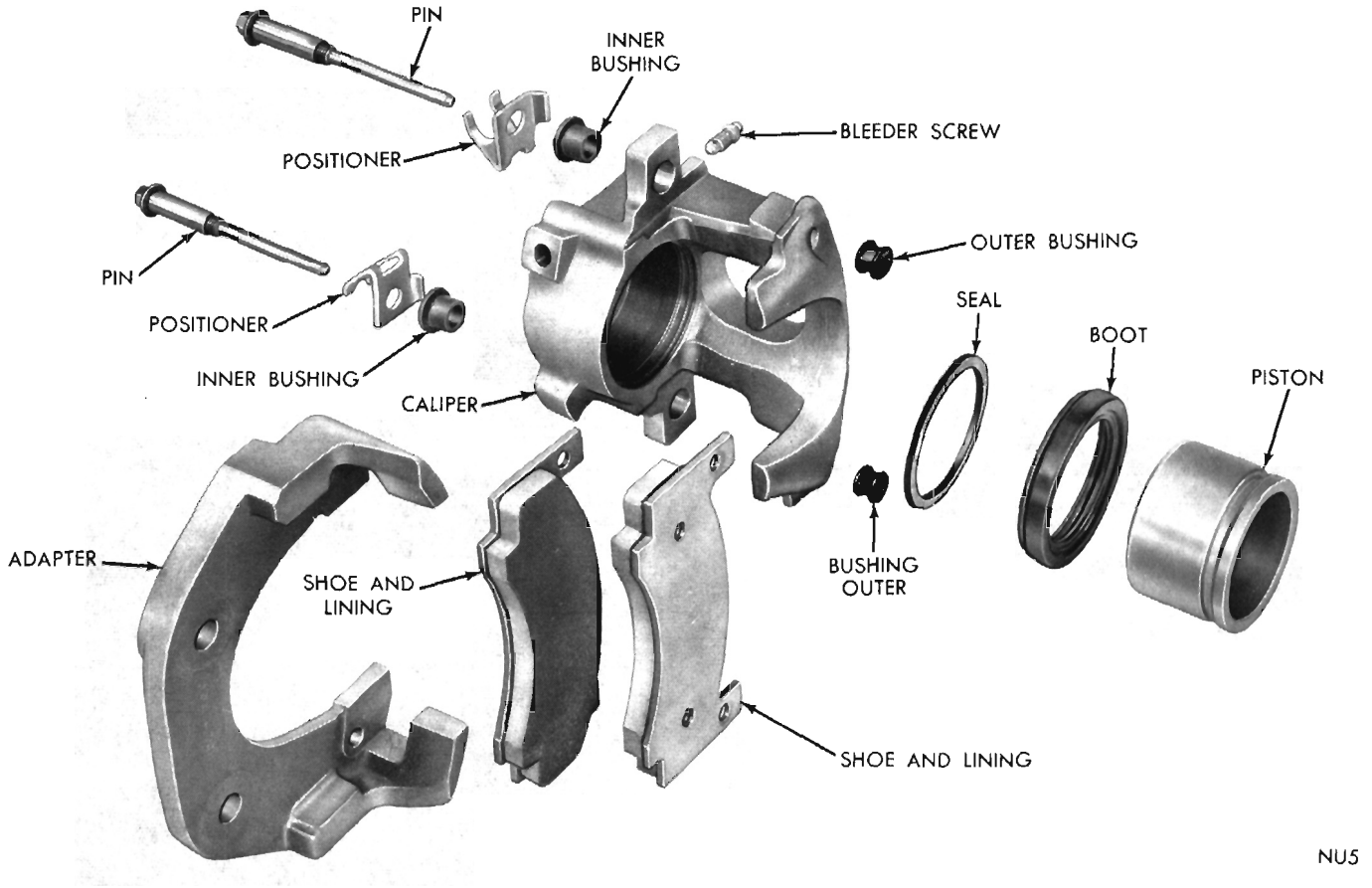

Fig. 9—Caliper Assembly (Exploded View)

protector jaws (Fig. 10). (Caution: **Excessive vise pressure will cause bore distortion and binding of piston.)**

(2) Remove dust boot. (Fig. 11).

(3) Using Tool C-4087, remove piston from caliper (Fig. 10). Care must be used so as not to scratch, burr or otherwise damage piston on outside diameter. To do so effects sealing qualities of piston. Draw piston straight out of its bore. If a piston becomes cocked removal is more difficult and piston or bore may be damaged. **CAUTION: UNDER NO CONDITION SHOULD AIR PRESSURE BE USED TO REMOVE PISTON FROM BORE. PERSONAL INJURY COULD RESULT FROM SUCH PRACTICE.**

(4) Using a small, pointed, wooden or plastic stick, work piston seal out of its groove in piston bore (Fig. 12). Discard old seal. **Do not use a screwdriver or other metal tool for this operation, because of possibility of scratching piston bore or burring edges of seal groove.**

(5) Remove outer bushings from caliper by pressing out of bore, (Fig. 13) using a suitable tool. Discard bushings.

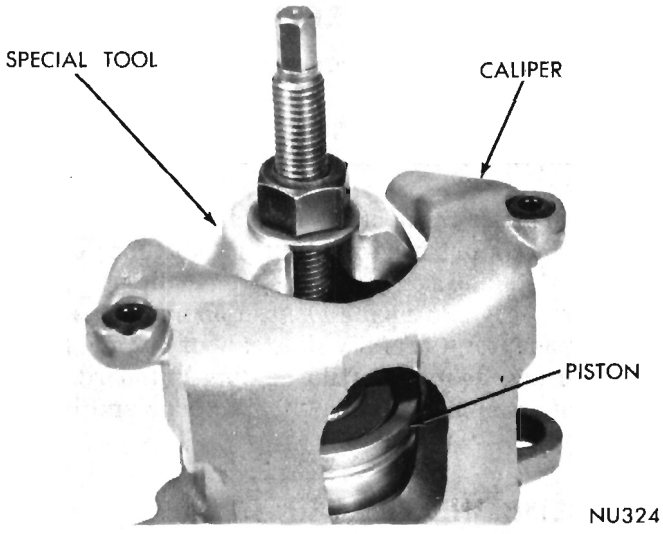

Fig. 10—Removing Piston from Caliper

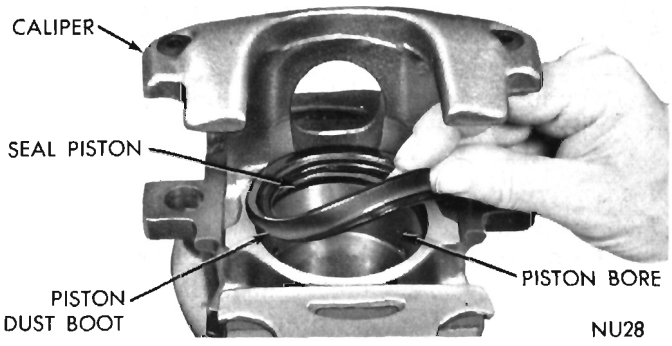

Fig. 11—Removing or Installing Piston Dust Boot

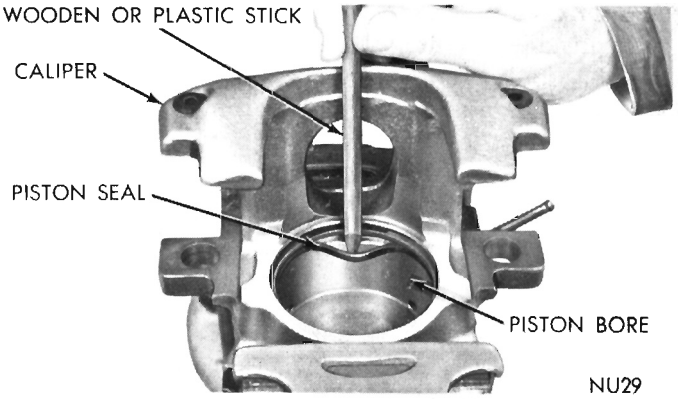

Fig. 12—Removing Piston Seal

(6) Remove inner bushing and discard. Remove bleeder screw.

CLEANING AND INSPECTION

Clean all parts using alcohol or a suitable solvent and blow dry, using compressed air. Blow out all drilled passages and bores. (Whenever a caliper has been disassembled, and a new boot and seal must be installed at reassembly). Inspect the piston bore for scoring or pitting. Install a new piston if it is pitted, scored or the plating is severly worn. Bores that show light scratches or corrosion, can usually be cleared with crocus cloth. However, bores that have deep scratches or scoring should be honed, using Tool C-4095, providing the diameter of the bore is not increased more than .002 inch. If the bore does not clean up within this specification, a new caliper housing should be installed. Black stains on the piston are caused by the piston seal and will do no harm. **When using Hone C-4095, coat the stones and bore with brake fluid. After honing the bore, carefully clean the seal and boot grooves with a stiff non-metallic rotary brush (Fig. 14).**

Use extreme care in cleaning the caliper after honing. Remove all dirt and grit by flushing the caliper with brake fluid; wipe dry with a clean, lintless cloth and then clean a second time in the same manner or until clean cloth shows no signs of discoloration.

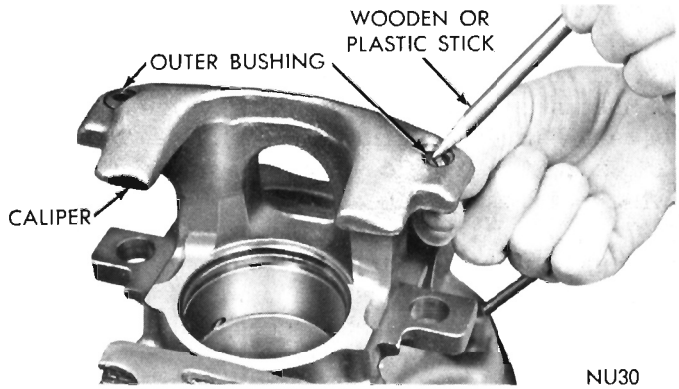

Fig. 13—Removing Outer Bushings

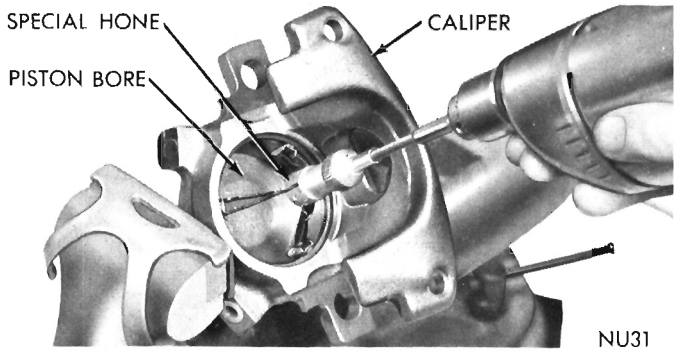

Fig. 14—Honing Piston Bore

ASSEMBLING CALIPER

(1) Clamp caliper in vise (with protector jaws), (Fig. 10). Caution: Excessive vise pressure will cause bore distortion and binding of piston.

(2) Dip new piston seal in lubricant (supplied with kit) Ucon #LB1145Y24 (or equivalent) and install in groove in bore. Seal should be positioned at one area in groove and gently worked around the groove, using **clean** fingers, until properly seated. **NEVER USE AN OLD PISTON SEAL.** (Be sure seal is not twisted or rolled). (Fig. 15).

(3) Coat new piston boot with lubricant (as specified above) leaving a generous amount of lubricant inside of boot. Install in caliper by working into outer groove, using fingers only. (Boot will seem larger than diameter of groove, but will snap into place when properly positioned in groove. (Fig. 16). Using a forefinger, slide around inside of boot to be sure it is seated, or correctly installed.

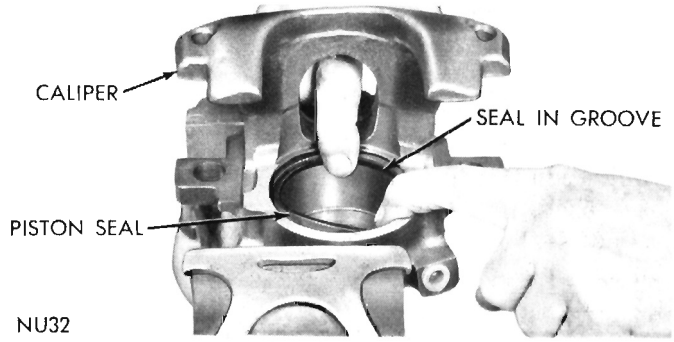

Fig. 15—Installing Piston Seal

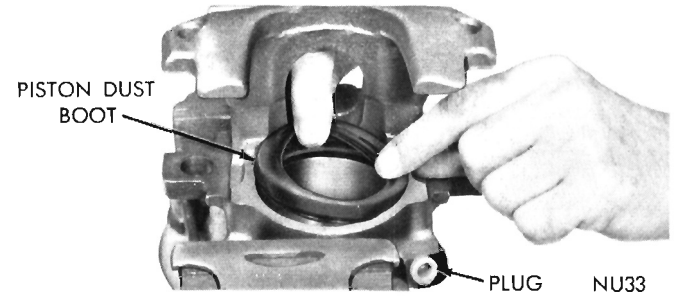

Fig. 16—Installing Piston Dust Boot

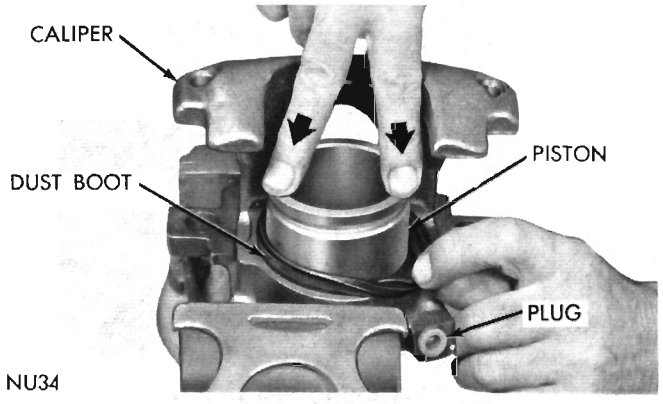

Fig. 17—Installing Piston (Through Boot)

(4) Plug high pressure inlet to caliper and bleeder screw hole, then coat piston with a generous amount of lubricant (as specified above). With fingers spreading boot, work piston into boot and press down on piston. (The entrapped air below piston will force boot around piston and into its groove as piston is depressed.) (Fig. 17). Remove plug, then carefully push piston down the bore until bottomed. Caution: **Force must be applied uniformly to avoid cocking.**

(5) Install new inner guide pin bushings in caliper with flanged end on inboard side (Fig. 3). Compress flanges of outboard bushing in with fingers and work into position in hole from the outboard side of the caliper (Fig. 18). Press **IN** on bushing, using finger tips or small plastic stick (Fig. 18) until seated. Be sure flanges extend over caliper casting evenly on both sides. Install bleeder screw.

Before installing caliper assembly on vehicle, inspect braking disc. Conditions as described in "Checking Braking Disc for Runout and Thickness" paragraph.

INSTALLING CALIPER

(1) Examine lining for wear damage, or fluid contamination if its condition is found satisfactory it may be reused. If not usable both front brakes must be relined with new. If old lining is to be reused, be sure linings and positioners are installed in their original position.

(2) Connect flexible brake hose to caliper and tighten securely.

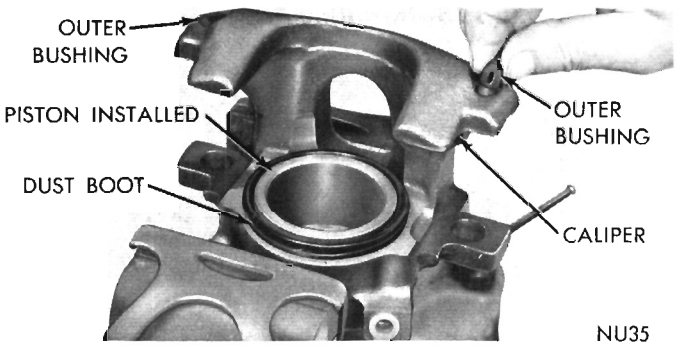

Fig. 18—Installing Outer Bushings

(3) Install new inboard shoe and lining adaptor (Fig. 8). Holding outboard shoe and lining in position in caliper, carefully slide caliper down into position in adaptor and over disc. Align pin holes of caliper, adaptor and inboard and outboard shoes.

(4) Install positioners over guide pins with open ends toward outside and arrows pointing upwards. (Fig. 1). Install assembled guide pins through bushing, caliper, adaptor, inboard and outboard shoes and into outer bushings in caliper.

(5) Press **IN ON END GUIDE PINS AND THREAD PINS INTO ADAPTOR. USING EXTREME CARE SO AS NOT TO CROSS THREADS.** Tighten from 30 to 35 foot-pounds. (Be sure tabs of positioners are over machined surfaces of caliper (Fig. 1).

(6) Remove plug from brake tube and install flexible brake hose. Tighten securely.

(7) With bleeder screw open, allow caliper to "gravity" fill with brake fluid, then close bleeder screw. (Be sure all air bubbles have escaped; replenish brake fluid in master cylinder. Bleed brakes as described under "Bleeding Brakes" paragraph.

(8) **Pump brake pedal several times until a firm pedal has been obtained.**

(9) After bleeding caliper, check for fluid tightness under maximum pedal pressures. (Recheck master cylinder reservoir level).

(10) Install wheel and tire assembly and tighten wheel stud nuts to 65 foot pounds. **This is important.** Install wheel cover.

(11) Remove jackstands or lower hoist.

(12) **Road test vehicle and make several stops to wear off any foreign material on the brakes and to seat the linings. The vehicle may pull to one side or the other if this is not done.**

CHECKING BRAKING DISC FOR RUNOUT AND THICKNESS

(1) Mount dial indicator C-3339 on steering arm with plunger contacting disc approximately one (1) inch from edge of disc. (Fig. 19).

(2) With wheel bearings adjusted to zero end play, check lateral runout. (Both sides of disc). Runout should not exceed .0025 inch. If runout is in excess of specification, install a new disc and hub assembly or reface disc, being careful not to remove more than .015 inch from each side of disc. Be sure and readjust wheel bearings after check.

(3) Thickness variation of disc should be made in conjunction with runout. Measure thickness of disc at twelve (12) equal points with a micrometer at a radius approximately one (1) inch from edge of disc. If thickness measurements vary by more than .0005 inch, disc should be removed and a new disc and hub assembly installed. (Fig. 19).

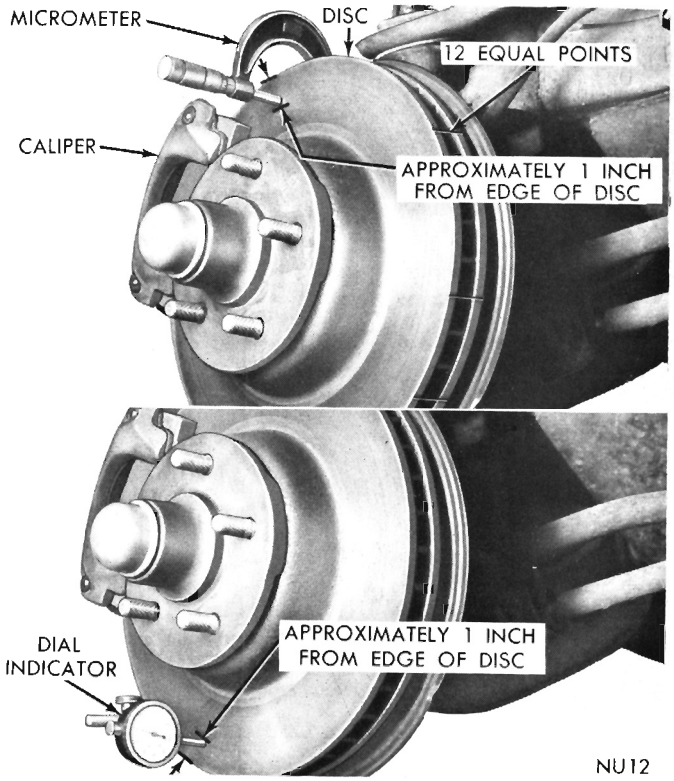

Fig. 19—Checking Braking Disc Run-out and Thickness

(4) Light scoring and/or wear is acceptable if heavy scoring or warping is evident, the disc must be refinished or replaced (See Refinishing (Refacing) Braking Disc.) If cracks are evident the hub and disc assembly must be replaced.

REMOVING BRAKING DISC AND HUB

(1) Raise vehicle on hoist or jackstands. Remove wheel cover and wheel and tire assembly.

(2) Remove caliper assembly, as described under "Removing Caliper" paragraph, (but do not disconnect brake line). Suspend caliper from wire hook or loop to avoid strain on flexible hose.

(3) Remove grease cap, cotter pin, nut lock, nut, thrust washer and outer wheel bearing.

(4) Pull disc and hub off wheel spindle.

INSTALLING BRAKING DISC AND HUB

(1) Slide brake disc and hub assembly on spindle.

(2) Install outer bearing, thrust washer and nut.

(3) Tighten wheel bearing adjusting nut to 90 inch pounds while rotating disc and hub. Recheck disc run-out as described previously.

(4) Position lock nut on nut with one pair of slots in line with cotter pin hole.

(5) Back off adjusting nut and lock assembly one slot.

(6) Clean grease cap, coating inside with wheel grease (do not fill cap) and install cap. Clean both sides of braking disc with alcohol or suitable solvent.

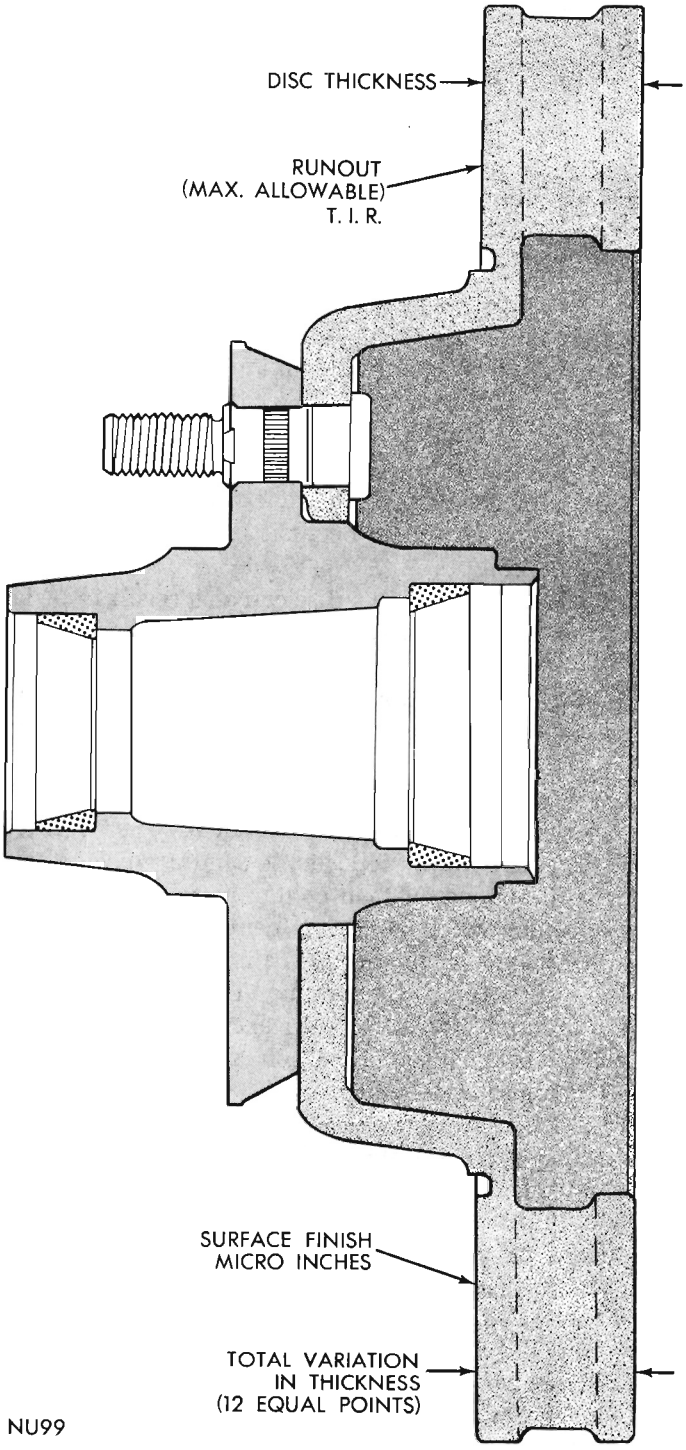

Fig. 20—Disc Specifications

(7) Install caliper assembly, as described in "Installing Caliper" paragraph.

REFINISHING (REFACING) BRAKING DISC

Before refinishing or refacing a braking disc, the disc should be checked and inspected for the following conditions:

(1) Scoring, rust, impregnation of lining material and worn ridges.
(2) Runout or wobble.
(3) Thickness variation (Parallelism).
(4) Dishing or distortion (Flatness).

If a vehicle has not been driven for a period of time, the discs will rust in the area not covered by the lining and cause noise and chatter, excessive wear and scoring of the discs and lining. Wear ridges on the discs can cause temporary improper lining contact if ridges are not removed before installation of new lining (pads).

Lining deposit on the disc, may cause erratic friction characteristics if new lining is installed without resurfacing or cleaning the disc.

Excessive runout or wobble in a disc can increase pedal travel due to piston knockback and increase seal bushing wear due to necessity of caliper to follow the disc wobble.

Thickness variation in a disc can also result in pedal pulsation, chatter and surge due to variation in brake output when disc section is uneven.

Dishing or distortion can be caused by extreme heat and abuse of the brakes.

Resurfacing Braking Disc

This operation can be used when the disc surface is rusty or has lining deposits. A sanding disc attachment will remove surface contamination without removing much material. It will generally follow variations in thickness which are in the disc. A run-out of .002 inch total indicator reading (T.I.R.) is the acceptable minimum tolerance, with exceptions up to .005 inch T.I.R. Thickness variation should not exceed .0005 inch at any diameter.

Refacing Braking Disc

If scoring is deep, runout or thickness variation is beyond limits, or other distortion is apparent, the disc should be refaced on a brake lathe equipped for disc machining. (Fig. 21). After machining a disc, a grinder may be used to remove tool marks.

A new disc and hub assembly should be installed if the old one cannot be refaced to bring it within specifications without removing an excessive amount of material. Do not remove more than .050 inch per disc. Brake operation may be affected if an excess of material is removed.

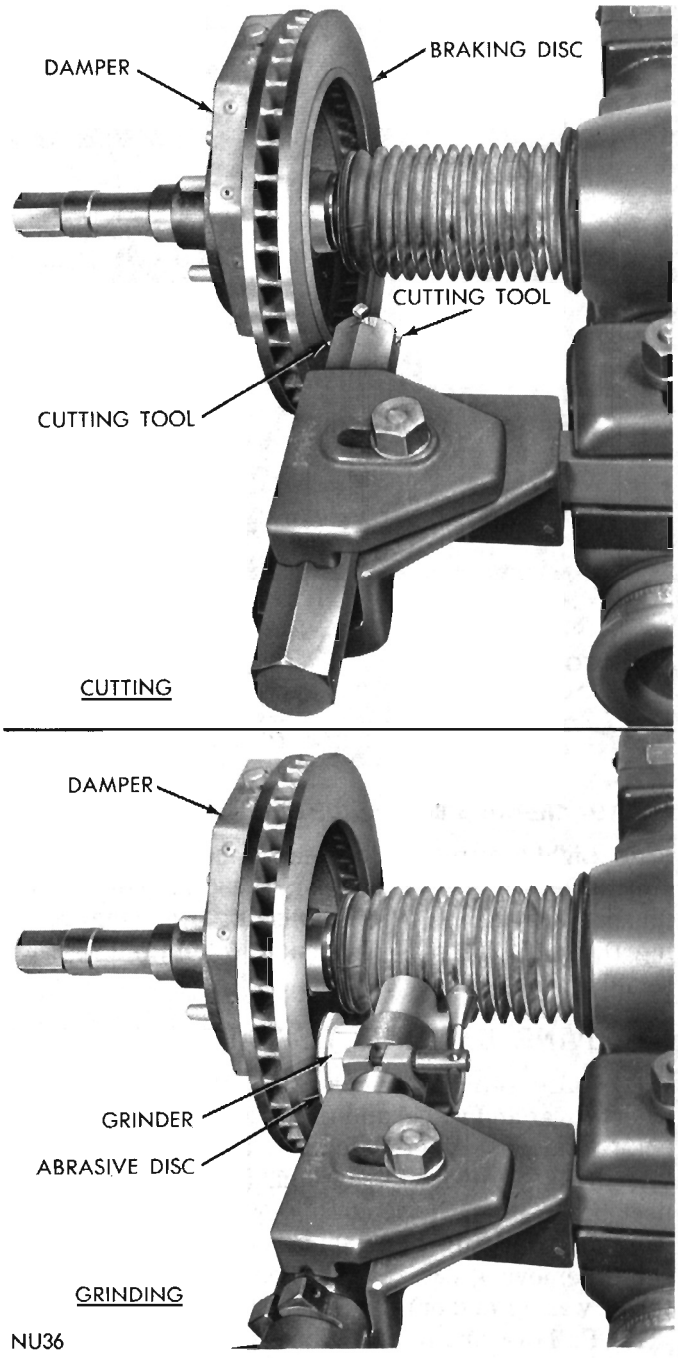

Fig. 21—Refacing Braking Disc

Both sides of the braking surface should be machined or ground when servicing since small variations in resurfacing machines may cause the newly finished surface to be out of parallel with the opposite unfinished side resulting in a thickness variation beyond acceptable limits. Disc brakes are very sensitive to thickness variation.

The following chart and (Fig. 20) shows the location and tolerances of required specifications when servicing the braking disc:

Brake Design	Thickness	Minimum Thickness	Thickness Variation	Runout	Flatness	Micro Finish
Kelstar Kelsey-Hayes	1.250-1.240	1.20	.0005	.0025"		15-80

CAUTION:

When refacing a braking disc (Fig. 21), the manufacturers of the refacing equipment instructions should be followed closely, and the correct brake disc mounting adaptors must be used to obtain the required specifications.

MASTER CYLINDER

(Bendix and Kelsey Hayes Disc Brakes)

INDEX

	Page		Page
Bleeding Master Cylinder	57	Installing Master Cylinder	57
Cleaning and Inspection	56	Master Cylinder Removal	55
Disassembling Master Cylinder	55	Reassembling Master Cylinder	57
General Information	55	Testing Master Cylinder	58
Hydraulic System Safety Switch	58	Testing Hydraulic System Safety Switch	58

GENERAL INFORMATION

The tandem master cylinder (Fig. 1) is of the compensating type with the reservoirs cast integrally. The master cylinder consists of a front and rear piston (in tandem) two outlets, with 1 containing a residual pressure valve and spring (rear brake line outlet only), (Fig. 3).

The **front** outlet tube from the master cylinder is connected to the hydraulic system safety switch (Figs. 8 or 9) and thence to the rear brakes. The **rear** outlet tube from the master cylinder is also connected to the safety switch and the **front** brakes.

The master cylinder used on vehicles not equipped with power brake units is serviced in the same manner as the master cylinder with power brakes with one exception, the master cylinder with power brakes does not include the push rod.

The drum brake master cylinder is different than the disc brake master cylinder and is covered in the service brake section of this group.

SERVICE PROCEDURES

MASTER CYLINDER REMOVAL

(1) Disconnect front and rear brake tubes from master cylinder and install a plug in rear outlet. (The residual pressure valve in front outlet will keep cylinder from draining).

(2) Disconnect pedal push rod (drum type brakes) from brake pedal.

(3) Remove nuts that attach master cylinder to cowl panel and/or power brake unit, (if so equipped).

(4) Slide master cylinder straight out from cowl panel and/or power brake unit, (if so equipped).

DISASSEMBLING MASTER CYLINDER

To disassemble the master cylinder, (Figs. 1 and 4), clean the outside of the master cylinder thoroughly.

(1) Press bail to one side and remove cover and gasket. Empty brake fluid from reservoirs.

(2) Remove piston retaining screw and gasket (Fig. 2), then slide rear piston assembly out of cylinder bore.

(3) Upend master cylinder and tamp (open end down) on bench to remove front piston and spring. If front piston sticks in bore of cylinder, use air pressure to force piston out of cylinder. **New cups must be installed at reassembly if air pressure is used.**

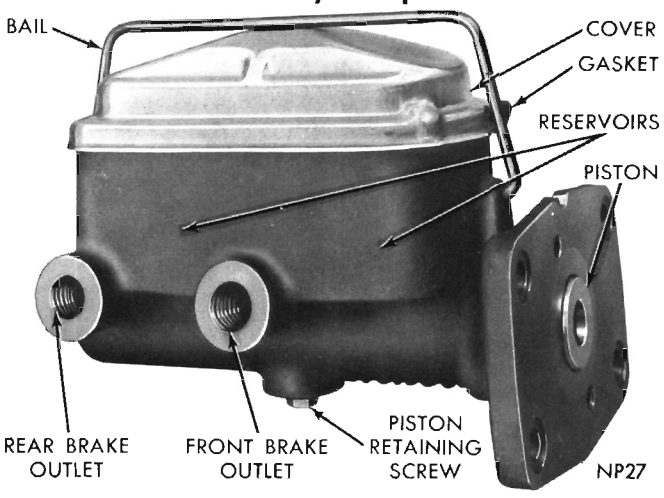

Fig. 1—Tandem Master Cylinder Assembly

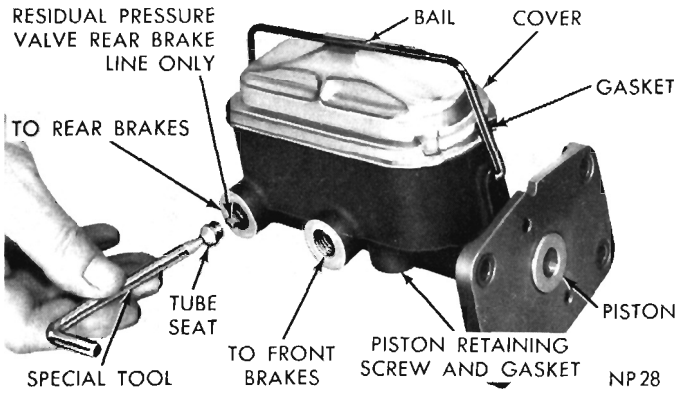

Fig. 2—Removing Tube Seats

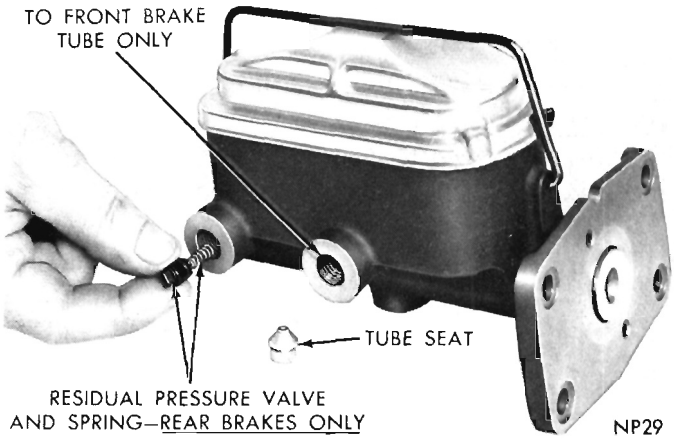

Fig. 3—Removing or Installing Residual Pressure Valve and Spring

(4) Remove front piston compression spring from bore.

(5) Using Tool T-109-178 (or an easy out) remove tube seats by threading tool firmly into seat, tap tool and seat out of cylinder body. (Fig. 2). Discard seats.

(6) Remove residual pressure valve and spring from front outlet (Fig. 3).

(7) Remove rubber cups from pistons after noting position of cup lips. Do not remove center cup of rear piston. If cup is damaged or worn. Install a new rear piston assembly.

CLEANING AND INSPECTION

Clean master cylinder thoroughly, using a suitable solvent and dry with compressed air. Wash the cylinder bore with clean brake fluid and inspect for scoring or pitting. Master cylinder bore walls that have light scratches or show signs of corrosion, can usually be cleaned with crocus cloth. However, cylinder bores that have deep scratches or scoring may be honed, providing the diameter of the bore is not increased more than .002 inch. If master cylinder bore does not clean up at .002 inch when honed, the master cylinder should be discarded and a new master cylinder installed.

If master cylinder pistons are badly scored or corroded, replace them with new ones. The piston cups and seals should be replaced when reconditioning a master cylinder.

When overhauling a master cylinder, use all parts furnished in repair kit. **Discard all used rubber parts.**

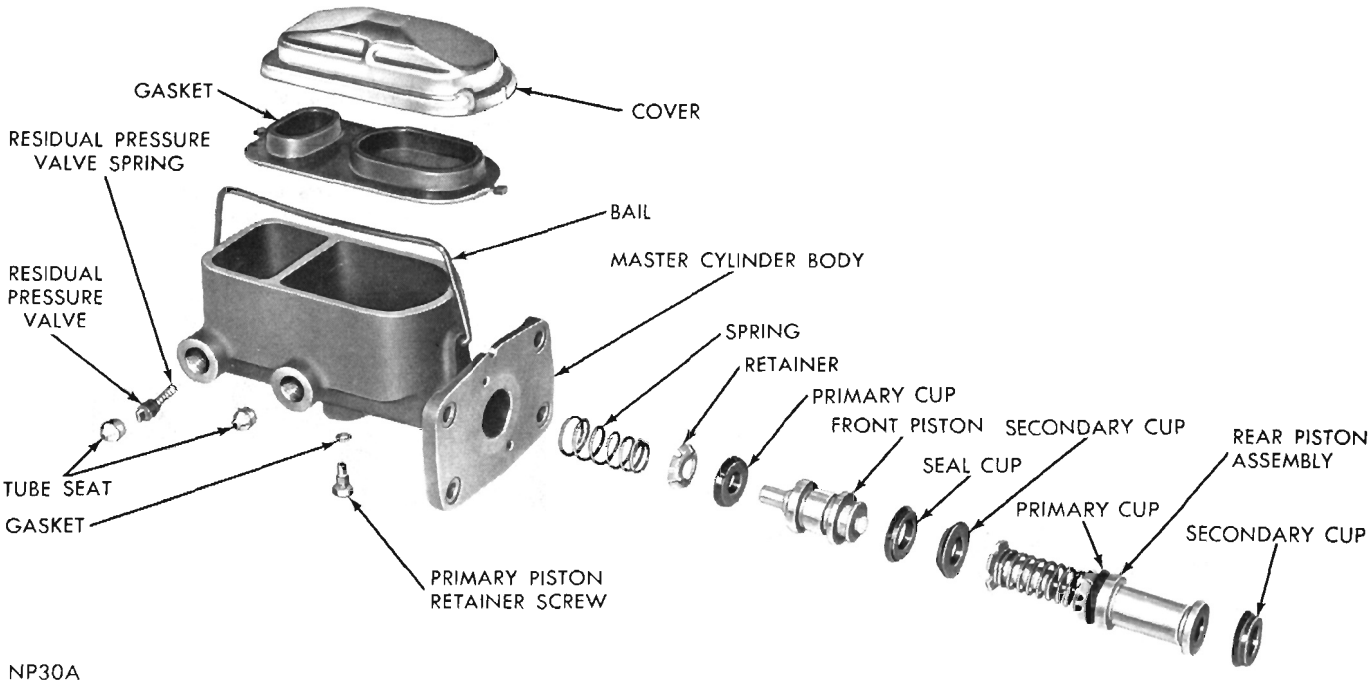

Fig. 4—Tandem Master Cylinder (Exploded View)

REASSEMBLING MASTER CYLINDER

Front Piston

Before assembling the master cylinder, dip all component parts in clean brake fluid and place on a clean shop towel or paper. (Assembling seals dry can ruin them.)

(1) Carefully work primary cup on end of front piston with the lip away from piston (Fig. 4).

(2) Carefully work second seal cup over rear end of piston and into second land. (Be sure lip of cup is facing front of piston). (Fig. 4).

(3) Carefully work rear secondary cup over piston and into rear land. The lip must be facing toward rear (Fig. 4).

(4) Slide cup retainer over stem of front piston with beveled side away from piston cup (Fig. 4).

(5) Position small end of pressure spring into retainer, then slide assembly into bore of cylinder (Fig. 5). **Be sure cups enter bore evenly in order not to damage sealing quality of cups. (Keep well lubricated with brake fluid.)**

Rear Piston

(1) Carefully work secondary cup over rear end of rear piston with lip of cup toward front (Fig. 4).

(2) Center spring retainer of rear piston assembly over shoulder of front piston. Push piston assemblies into bore. Carefully work lips of cups into bore, then seat piston assemblies. (Fig. 6).

(3) Holding pistons in seated position, install piston retaining screw and gasket. Tighten securely (Fig. 6).

(4) Install residual pressure valve and spring (Fig. 3) in **front** outlet then install tube seats firmly. (When the bleeding tubes are attached, the tube seats will be positioned correctly.)

BLEEDING MASTER CYLINDER

Before installing master cylinder on vehicle, it must be bled on the bench as follows:

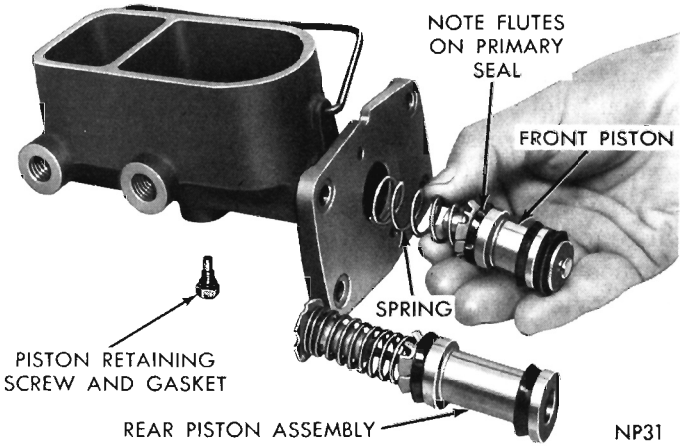

Fig. 5—Installing Front Piston and Spring

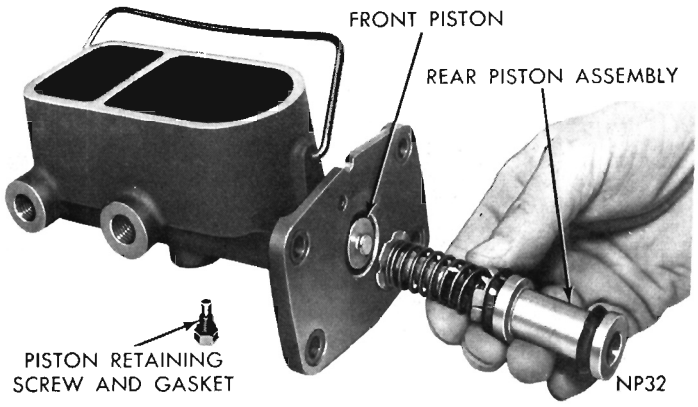

Fig. 6—Installing Rear Piston Assembly

(1) Clamp master cylinder in a vise and attach bleeding tubes Tool C-4029 (Fig. 7).

(2) Fill both reservoirs with approved brake fluid.

(3) Using a wooden stick or dowel (power brake equipped vehicles) depress push rod slowly. (Note air bubbles.) Allow pistons to return under pressure of springs. Do this several times or until bubbles cease to appear (Fig. 7).

(4) Remove bleeding tubes from cylinder and install plug in rear outlet. (As tubes are removed, fluid remaining in tubes will syphon out.)

(5) Place cover and gasket over reservoirs and secure with bail.

(6) Remove master cylinder from vise and install on vehicle as follows:

INSTALLING MASTER CYLINDER

(1) Install master cylinder on vehicle, aligning push rod with cowl panel opening (manual) or power brake push rod with master cylinder piston.

(2) Slide over mounting studs. Install attaching nuts and tighten to 9 foot-pounds.

(3) Connect front and rear brake tubes and tighten to 150 inch-pounds.

(4) Bleed brakes at wheel cylinders, using regular

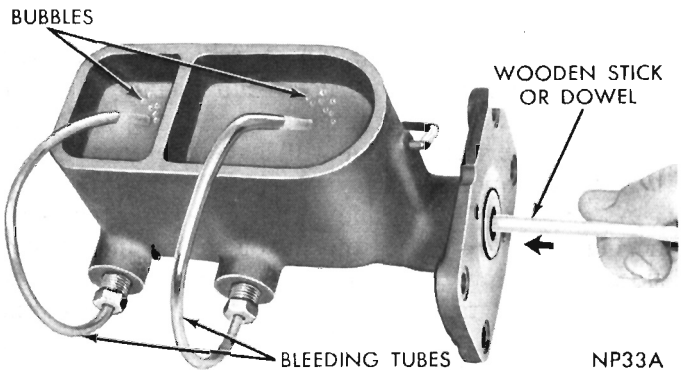

Fig. 7—Bleeding Master Cylinder

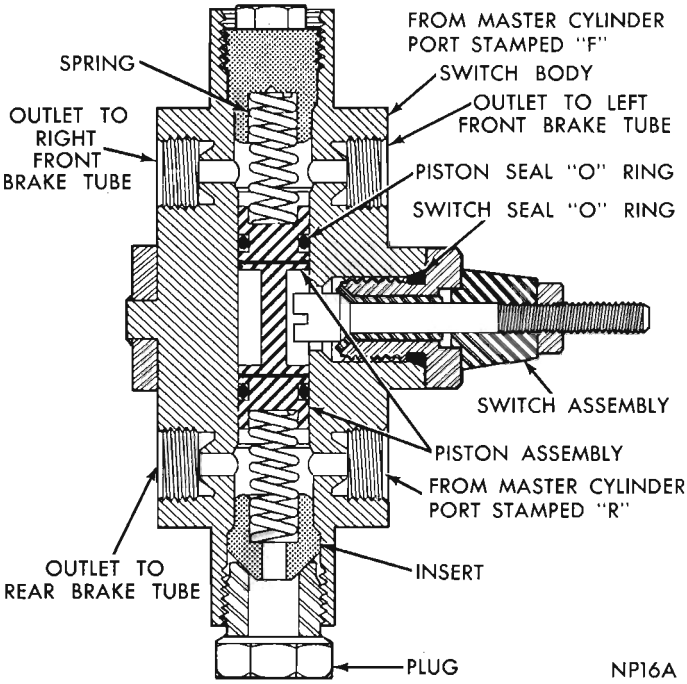

Fig. 8—Hydraulic System Safety Switch (Sectional)

procedure, being sure fluid level is maintained. (See Bleeding the Brake System).

TESTING MASTER CYLINDER

Be sure that the master cylinder compensates at both ports. This can be done by applying the pedal lightly with the engine running (power brakes) and observing for a gyser of fluid squirting up in the reservoirs. This may only occur in the front chamber and so to determine if the rear compensating port is open, it will be necessary to pump up the brakes rapidly and then hold the pedal down. Have an observer watch the fluid in the rear reservoir while the pedal is raised. A disturbance in the fluid indicates that the compensating port is open.

HYDRAULIC SYSTEM SAFETY SWITCH

The hydraulic system safety switch (Figs. 8 and 9) is used to warn the vehicle operator that one of the hydraulic systems has failed. A failure in one part of the brake system does not result in failure of the entire hydraulic brake system. As an example, failure of the rear brake system will leave the front brake system still operative.

As pressure falls in one system, the other system's normal pressure forces the piston to the inoperative side; contacting the switch terminal, causing a red warning light to come on in the instrument panel,

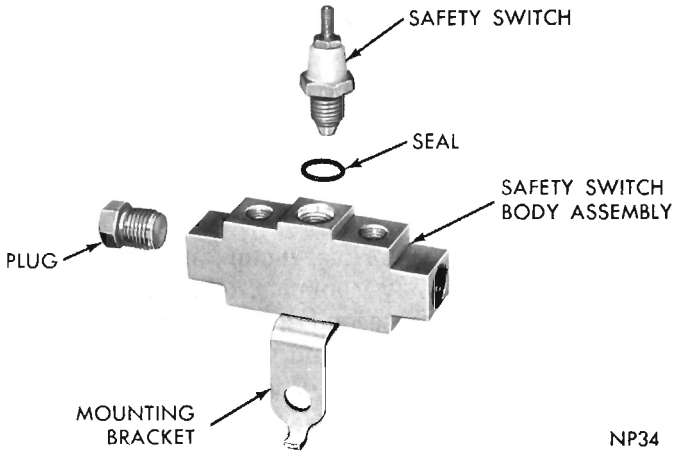

Fig. 9—Hydraulic System Safety Switch (Exploded View)

thus warning the operator of the vehicle, that one of the systems has failed and should be repaired.

The safety switch is mounted on the frame in a vertical position, with the brake tubes connected, (Fig. 8).

If a malfunction occurs within the switch, disconnect tubes from body assembly and install a new assembly. **The component parts of the switch body are not serviced.** However the switch unit can be removed if a malfunction occurs, and a new switch unit installed.

If a new safety switch or body assembly is installed, be sure and bleed the brake system.

TESTING HYDRAULIC SYSTEM SAFETY SWITCH

The brake warning light flashes only when the parking brake is applied with the ignition key turned "ON". The same light will also illuminate should one of the two service brake systems fail when the brake pedal is applied. To test the system turn the ignition key "ON", and apply the parking brake. If the light fails to light, inspect for a burned out bulb, disconnected socket, a broken or disconnected wire at the switch.

To test the service brake warning system, raise the car on a hoist and open a wheel cylinder bleeder while a helper depresses the brake pedal and observes the warning light. If the light fails to light, inspect for a burned out bulb, disconnected socket, a broken or disconnected wire at the switch. If the bulb is not burned out and the wire continuity is proven, replace the brake warning switch in the brake line Tee fitting mounted on the frame rail in the engine compartment below the master cylinder.

MASTER CYLINDER

(Kelsey-Hayes Floating Caliper Disc Brake)

INDEX

	Page		Page
Bleeding Master Cylinder	60	Master Cylinder Removal	59
Cleaning and Inspection	60	Pressure Metering Valve	62
Disassembling Master Cylinder	59	Reassembling Master Cylinder	60
General Information	59	Testing Master Cylinder	61
Hydraulic System Safety Switch	62	Testing Hydraulic System Safety Switch	62
Installing Master Cylinder	60		

GENERAL INFORMATION

The tandem master cylinder (Fig. 1) (1 and 1/8 inch bore) is of the compensating type with the reservoirs cast integrally. The master cylinder consists of a front and rear piston (in tandem) two outlets, with 1 containing a residual pressure valve and spring (rear brake line outlet only) (Fig. 3).

The **front** outlet tube from the master cylinder is connected to the hydraulic system safety switch (Figs. 8 or 9) and thence to the rear brakes. The **rear** outlet tube from the master cylinder is also connected to the safety switch and the **front** brakes.

The master cylinder used on vehicles not equipped with power brake units is serviced in the same manner as the master cylinder with power brakes with one exception, the master cylinder **for** power brakes does not include the push rod.

The **drum** brake master cylinder is different than the disc brake master cylinder and is covered in the service brake section of this group.

SERVICE PROCEDURES

MASTER CYLINDER REMOVAL

(1) Disconnect front and rear brake tubes from master cylinder and install a plug in **rear** outlet. (The residual pressure valve in **front** outlet will keep cylinder from draining).

(2) Disconnect pedal push rod (drum type brakes) from brake pedal.

(3) Remove nuts that attach master cylinder to cowl panel and/or power brake unit (if so equipped).

(4) Slide master cylinder straight out from cowl panel and/or power brake unit (if so equipped).

DISASSEMBLING MASTER CYLINDER

To disassemble the master cylinder, (Figs. 1 and 4), clean the outside of the master cylinder thoroughly.

(1) Press bail to one side and remove cover and gasket. Empty brake fluid from reservoirs.

(2) Remove piston retaining screw and gasket (Fig. 2), then slide rear piston assembly out of cylinder bore.

(3) Upend master cylinder and tamp (open end down) on bench to remove front piston and spring. If front piston sticks in bore of cylinder, use air pressure to force piston out of cylinder. **New cups must be installed at reassembly if air pressure is used.**

(4) Remove front piston compression spring from bore.

(5) Using Tool T-109-178 (or an easy out) remove tube seats by threading tool firmly into seat, **tap tool** and seat out of cylinder body. (Fig. 2). Discard seats.

(6) Remove residual pressure valve and spring from front outlet (Fig. 3).

(7) Remove rubber cups from pistons after noting position of cup lips. Do not remove center cup of rear piston. If cup is damaged or worn, install a new rear piston assembly.

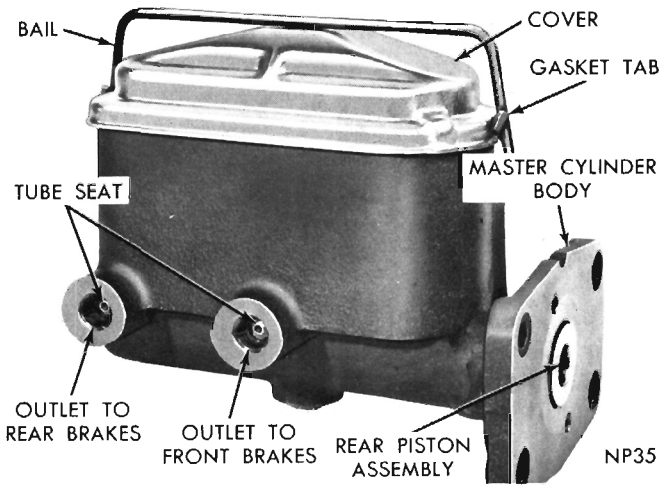

Fig. 1—Tandem Master Cylinder

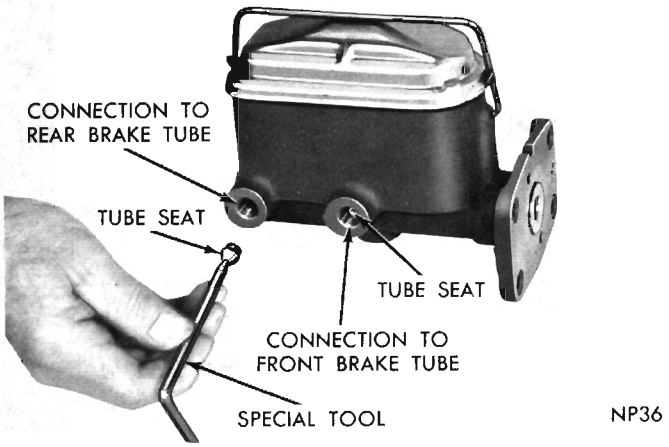

Fig. 2—Removing Tube Seats

CLEANING AND INSPECTION

Clean master cylinder thoroughly, using a suitable solvent and dry with compressed air. Wash the cylinder bore with clean brake fluid and inspect for scoring or pitting. Master cylinder bore walls that have light scratches or show signs of corrosion, can usually be cleaned with crocus cloth. However, cylinder bores that have deep scratches or scoring may be honed, providing the diameter of the bore is not increased more than .002 inch. If master cylinder bore does not clean up at .002 inch when honed, the master cylinder should be discarded and a new master cylinder installed.

If master cylinder pistons are badly scored or corroded, replace them with new ones. The piston cups and seals should be replaced when reconditioning a master cylinder.

When overhauling a master cylinder, use all parts furnished in repair kit. **Discard all used rubber parts.**

REASSEMBLING MASTER CYLINDER

Front Piston

Before assembling the master cylinder, dip all component parts in clean brake fluid and place on a clean shop towel or paper (assembling seals dry, can ruin them).

(1) Slide thin washer over stem of front piston, followed by primary cup. (Be sure lip is away from piston.) (Fig. 4).

(2) Carefully work seal cup over rear end of piston and into second land. (Be sure lip of cup is facing front of piston.) (Fig. 4).

(3) Carefully work secondary piston cup over piston and into rear land. The lip must be facing toward rear (Fig. 4).

(4) Position small end of pressure spring into retainer, then slide assembly into bore of cylinder (Fig. 5). **Be sure cups enter bore evenly in order not to damage sealing quality of cups. (Keep well lubricated with brake fluid.)**

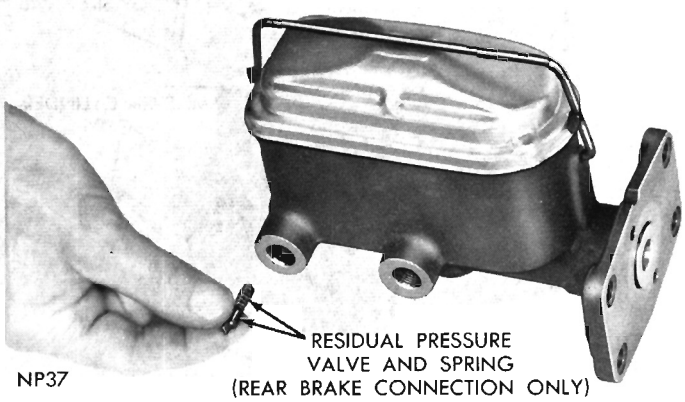

Fig. 3—Removing or Installing Residual Pressure Valve and Spring

Rear Piston

(1) Carefully work secondary cup over rear end of rear piston with lip of cup toward front (Fig. 4).

(2) Center spring retainer of rear piston assembly over shoulder of front piston. Push piston assemblies into bore. Carefully work lips of cups into bore, then seat piston assemblies (Fig. 6).

(3) Holding pistons in seated position, install piston retaining screw and gasket. Tighten securely (Fig. 6).

(4) Install residual pressure valve and spring (Fig. 3) in **front** brake outlet, then install tube seats firmly. (When the bleeding tubes are attached, the tube seats will be positioned correctly.)

BLEEDING MASTER CYLINDER

Before installing master cylinder on vehicle, it must be bled on the bench as follows:

(1) Clamp master cylinder in a vise and attach bleeding tubes Tool C-4029 (Fig. 7).

(2) Fill both reservoirs with approved brake fluid.

(3) Using a wooden stick or dowel (power brake equipped vehicles) depress push rod slowly. (Note air bubbles.) Allow pistons to return under pressure of springs. Do this several times or until bubbles cease to appear (Fig. 7).

(4) Remove bleeding tubes from cylinder and install plug in rear outlet. (As tubes are removed, fluid remaining in tubes will syphon out.)

(5) Place cover and gasket over reservoirs and secure with bail.

(6) Remove master cylinder from vise and install on vehicle as follows:

INSTALLING MASTER CYLINDER

(1) Install master cylinder on vehicle, aligning push rod with cowl panel opening (manual) or power

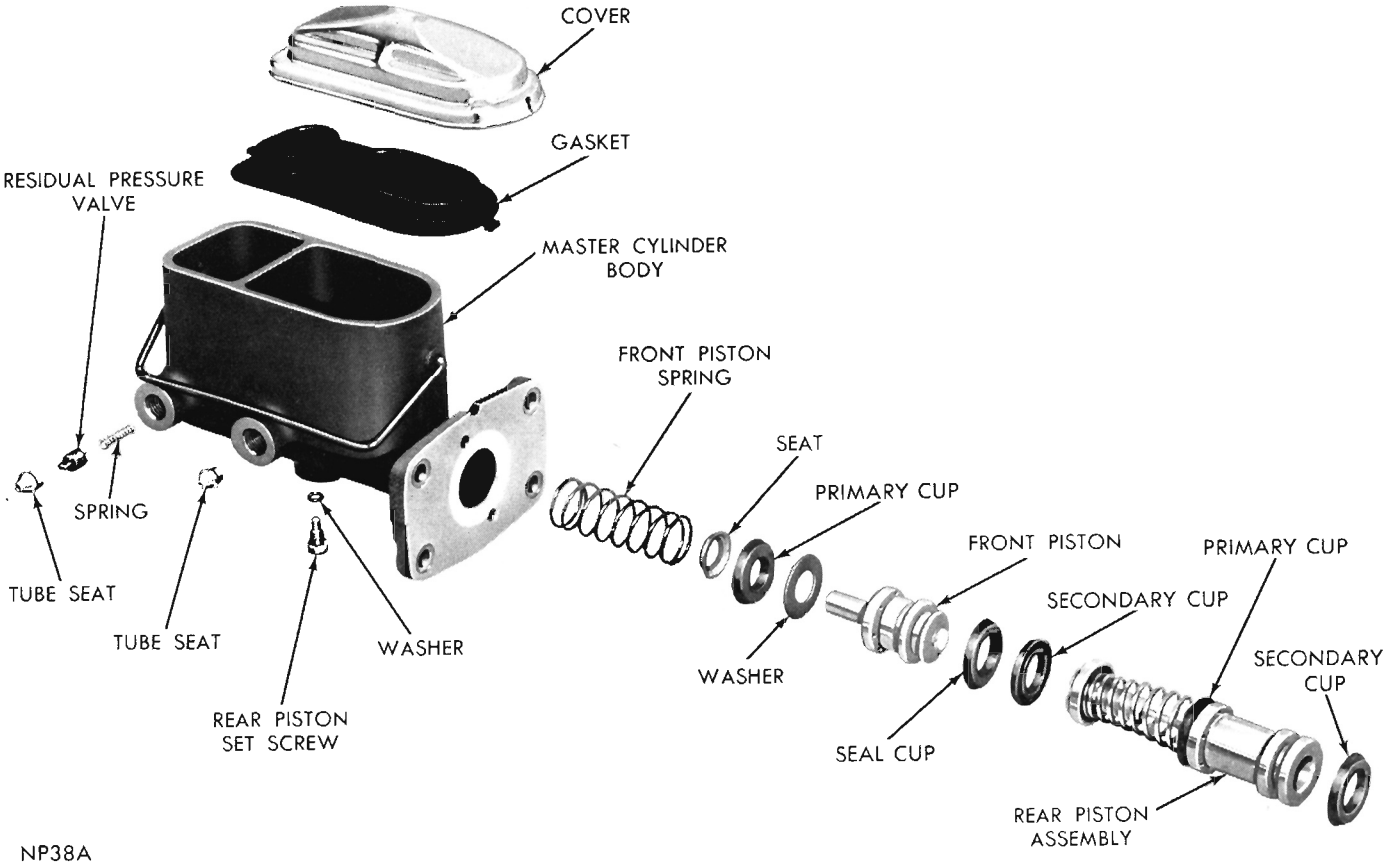

Fig. 4—Tandem Master Cylinder (Exploded View)

brake push rod with master cylinder piston.

(2) Slide over mounting studs. Install attaching nuts and tighten to 9 foot-pounds.

(3) Connect front and rear brake tubes and tighten to 150 inch-pounds.

(4) Bleed brakes at wheel cylinders, using regular procedure, being sure fluid level is maintained. (See "Bleeding Brake System".)

TESTING MASTER CYLINDER

Be sure that the master cylinder compensates at both ports. This can be done by applying the pedal lightly with the engine running (power brakes) and observing for a gyser of fluid squirting up in the reservoirs. This may only occur in the front chamber and so to determine if the rear compensating port is open, it will be necessary to pump up the brakes

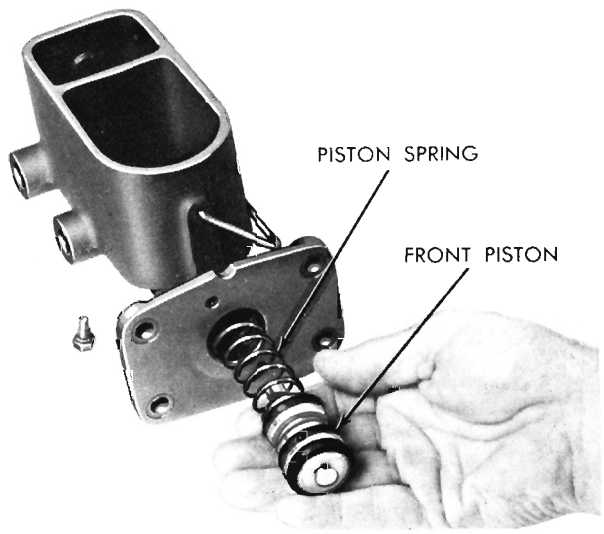

Fig. 5—Installing Front Piston and Spring

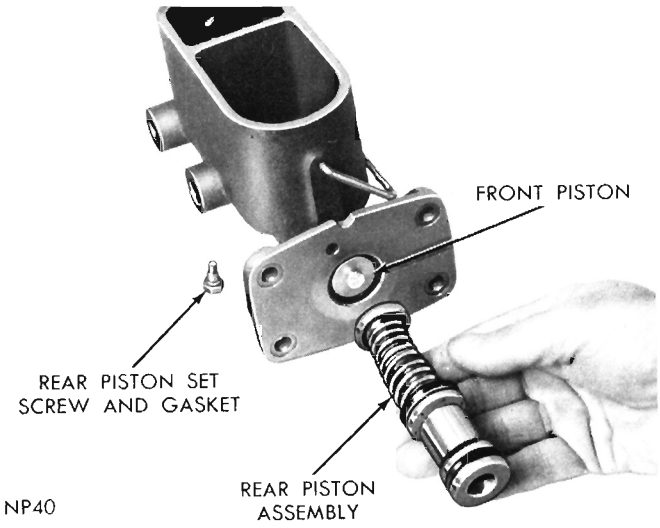

Fig. 6—Installing Rear Piston Assembly

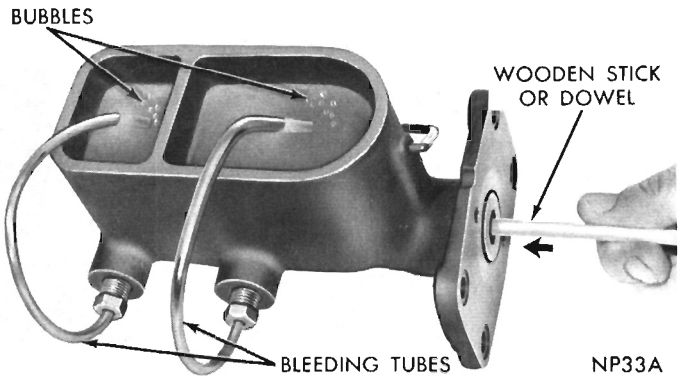

Fig. 7—Bleeding Master Cylinder

rapidly and then hold the pedal down. Have an observer watch the fluid in the rear reservoir while the pedal is raised. A disturbance in the fluid indicates that the compensating port is open.

HYDRAULIC SYSTEM SAFETY SWITCH

The hydraulic system safety switch (Figs. 8 and 9) is used to warn the vehicle operator that one of the hydraulic systems has failed. A failure in one part of the brake system does not result in failure of the entire hydraulic brake system. As an example, failure of the rear brake system will leave the front brake system still operative.

As pressure falls in one system, the other system's normal pressure forces the piston to the inoperative side; contacting the switch terminal, causing a red warning light to come on in the instrument panel, thus warning the operator of the vehicle, that one of

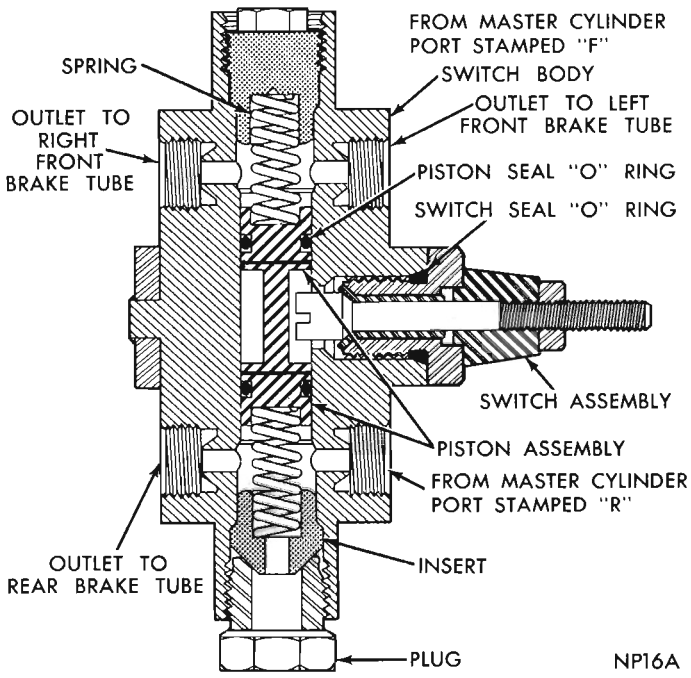

Fig. 8—Hydraulic System Safety Switch (Sectional)

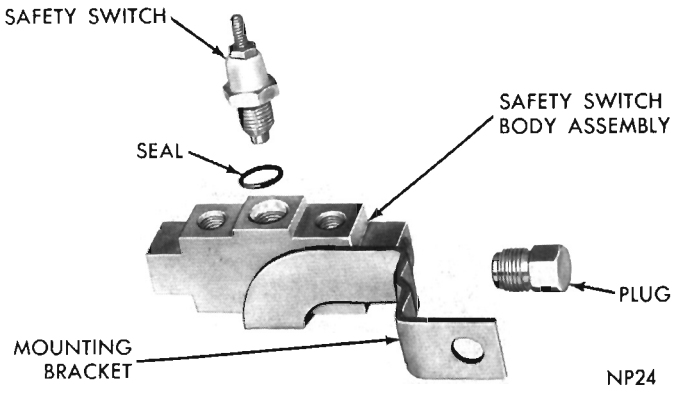

Fig. 9—Hydraulic System Safety Switch (Exploded View)

the systems has failed and should be repaired.

The safety switch is mounted on the frame in a vertical position, with the brake tubes connected, (Fig. 8).

If a malfunction occurs within the switch, disconnect tubes from body assembly and install a new assembly. **The component parts of the switch body are not serviced.** However, the terminal unit can be removed if a malfunction occurs, and a new terminal unit installed.

If a new safety switch body assembly is installed, bleed the brake system.

TESTING HYDRAULIC SYSTEM SAFETY SWITCH

The brake warning light flashes only when the parking brake is applied with the ignition key turned "ON". The same light will also illuminate should one of the two service brake systems fail when the brake pedal is applied. To test the system turn the ignition key "ON", and apply the parking brake. If the light fails to light, inspect for a burned out bulb, disconnected socket, a broken or disconnected wire at the switch.

To test the service brake warning system, raise the car on a hoist and open a wheel cylinder bleeder while a helper depresses the brake pedal and observes the warning light. If the light fails to light, inspect for a burned out bulb, disconnected socket, a broken or disconnected wire at the switch. If the bulb is not burned out and the wire continuity is proven, replace the brake warning switch in the brake line Tee fitting mounted on the frame rail in the engine compartment below the master cylinder.

PRESSURE METERING VALVE

All disc brake vehicles are equipped with a pressure metering valve (Figs. 1 and 2). The valve is

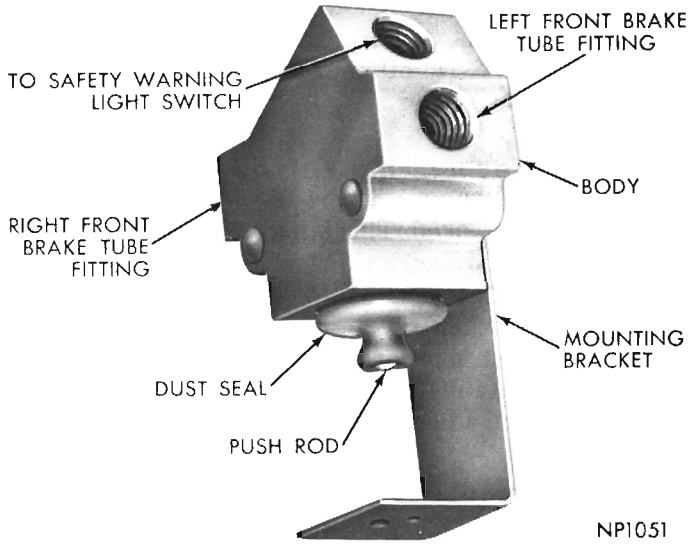

Fig. 1—Metering Valve Assembly

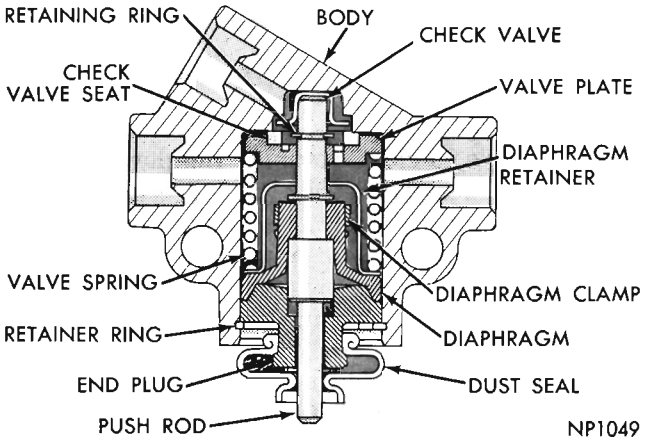

Fig. 2—Metering Valve (Sectional)

located on the left frame rail, directly under the battery (Fig. 3). The use of the metering valve is to better match front disc brakes with the rear drum brakes, resulting in improved braking and steering control on icy surfaces.

Due to operating characteristics of the valve, which causes complete shut-off of the flow of brake fluid between approximately 3 and 135 psi, front brake bleeding procedures should be done as follows:

(1) **Gravity Bleed:** This method of bleeding is not effected by the metering valve, as fluid pressures are always below 3 psi. Remove master cylinder reservoir cover and gasket, then fill reservoirs with approved brake fluid. Open disc brake bleeder screws, and allow fluid and air to drain until stream of fluid is free of air.

(2) **Pedal Bleed:** This method of bleeding is not affected by the metering valve, as fluid pressures are in excess of 135 psi. Follow normal procedure of

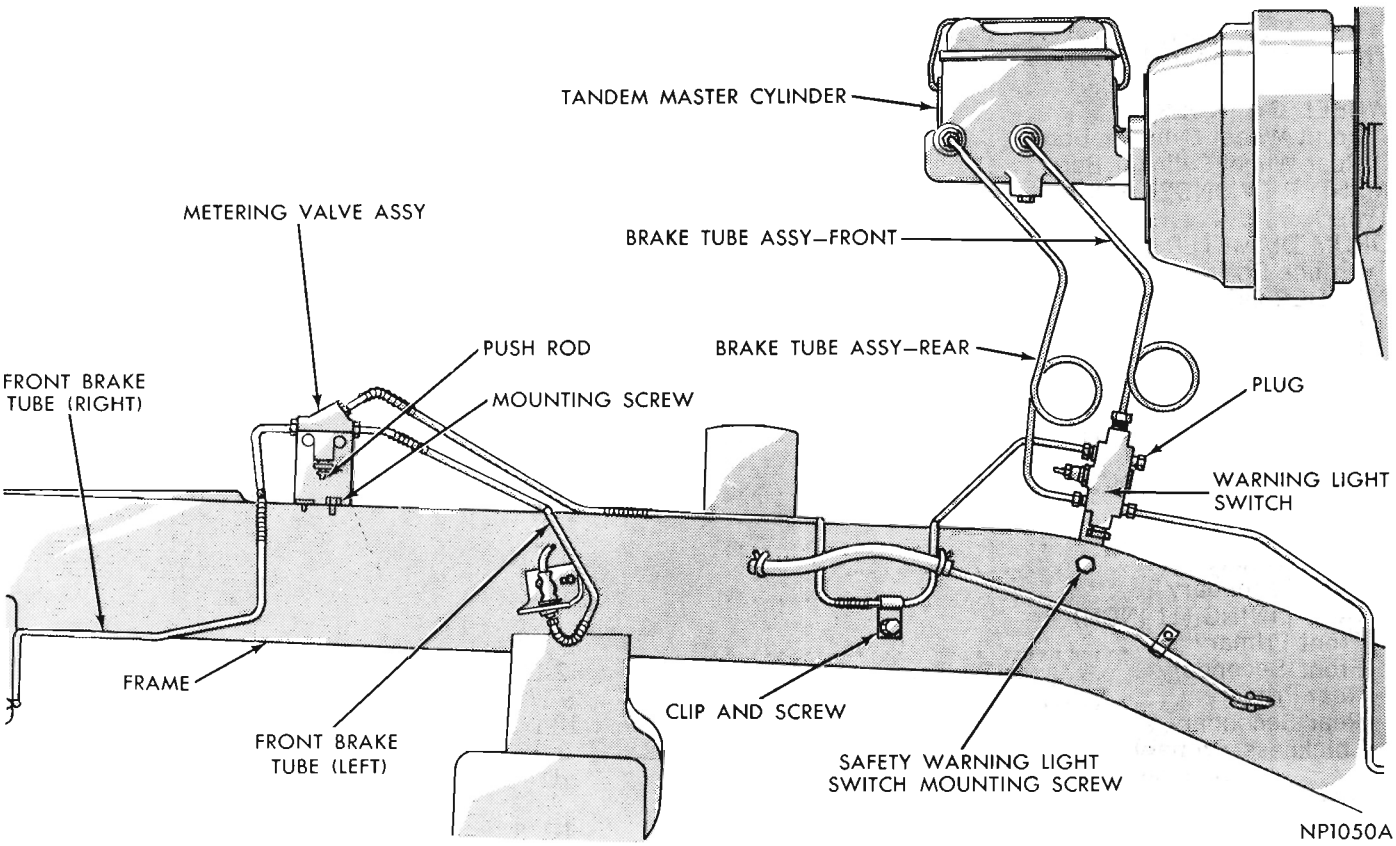

Fig. 3—Metering Valve Mounting

pumping pedal and opening bleeder screws. **Do not pump master cylinder dry!**

(3) **Pressure Bleed:** This method of bleeding is influenced by the metering valve. Bleed pressure, which is normally about 35 psi, is high enough to cause the metering valve to close, stopping the flow of fluid to the front brakes. However, the valve can be held open manually by keeping the pressure release push rod (Fig. 2) (at the bottom of the valve) in its upper most position, by depressing the push rod by hand, or Tool C-4059, while bleeding the brakes.

CAUTION: Under no condition should a rigid clamp, wedge or block be used to depress the push rod, as this can cause an internal failure in the valve, resulting in complete loss of front brakes.

It should be noted that the pressure release push rod is in its uppermost position when there is no pressure present. No attempt should be made to further depress the push rod.

Checking the Metering Valve

(1) A slight "bump" can be felt by the foot as the brake pedal is stroked. This bump will occur after the pedal has been stroked about 1 inch.

(2) A visual check will show that the push rod extends slightly when the brakes are applied and retracts when the brakes are released.

(3) In case of a metering valve malfunction, remove valve and install a new one.

SPECIFICATIONS

BRAKES—SERVICE AND PARKING

	6 Cyl.	V-8 & H.D.
Type	Duo-Servo Single Anchor	Duo-Servo Single Anchor
DRUM DIAMETER	9″	10″
NUMBER OF BRAKE SHOES	8	8
Front	2-9/16″ wide	2-9/16″ wide
Rear	2-1/16″ wide	1-13/16″ wide
BRAKE LINING	Molded Asbestos	Molded Asbestos
Front Primary	2-1/4″ wide 7-5/8″ long	2-1/2″ wide 8-1/2″ long
Front Secondary	2-1/2″ wide 9-5/8″ long	2-1/2″ wide 11″ long
Rear Primary	2″ wide 7-5/8″ long	1-3/4″ wide
Rear Secondary	2″ wide 9-5/8″ long	1-3/4″ wide
Thickness Primary	3/16″	3/16″
Secondary	1/4″	1/4″
WHEEL CYLINDER	4 per car	4 per car
Front Wheel Cylinder Bore	1″	1-1/8″
Rear Wheel Cylinder Bore	13/16″	15/16″
MASTER CYLINDER BORE	1″	1″
Type	Duo-Servo Single Anchor	Duo-Servo Single Anchor
DRUM DIAMETER	10″	10″
(Police Special & Heavy Duty)	11″	11″
NUMBER OF BRAKE SHOES	8	8
WIDTH (Standard)		
Front	2-1/2″	2-1/2″
Rear	1-3/4″	2-1/2″
(POLICE SPECIAL & HEAVY DUTY)		
Front	3″	3″
Rear	2-1/2″	2-1/2″
BRAKE LINING (10-INCH)	Molded Asbestos	Molded Asbestos
Front Primary	8-1/2″	8-1/2″
Front Secondary	11″	11″
Rear Primary	8-1/2″	8-1/2″
Rear Secondary	11″	11″
BRAKE LINING (11 INCH)		
Front Primary	9-1/4″	9-1/4″
Front Secondary	12-1/8″	12-1/8″
Rear Primary	9-1/2″	9-1/4″
Rear Secondary	12-1/8″	12-1/8″
Thickness Primary	3/16″	3/16″
Secondary	1/4″	1/4″
WHEEL CYLINDER		
Front Wheel Cylinder Bore	1-1/8″	1-1/8″
Rear Wheel Cylinder Bore	15/16″	15/16″
MASTER CYLINDER BORE	1″	1″

KELSEY HAYES DISC BRAKE

Type of Brake	Fixed Caliper Disc
Location	Front Wheels Only
Master Cylinder Reservoir	Horizontal Tandem (Dual)
Proportioning Valve Location	Left Sill
Brake Adjustment	None (Automatic)
Residual Valve Location	In Master Cylinder Outlet (to rear brakes only)
CALIPER ASSEMBLY	
Shoe and Lining Removal	Radially Outward (Remove Clips)
Number of Pistons	4 (Each Unit)
Piston Diameter	1-5/8"
Piston Bore Diameter	1.636"
Maximum Allowable (After Honing)	1.638"
Piston Seals	Moulded Rubber (Square Section) .092" Wide, .100 Radial Thickness
Piston Dust Boots	External Moulded Rubber 4 Per Unit
Bleeder Screw Location	Outer Housing 3/8"
Transfer Tube Type	Short Overhead
BRAKING DISC	
Type	Ventilated Cast Iron
Diameter Outside	11.04"
Inside	6.91"
Disc Runout (Maximum Allowable) T.I.R.	.0025"
Disc Surface Finish	15 to 80 Micro Inches
Disc Thickness	.810"
Disc Parallelism (Total Variation in Thickness)	.0005"
BRAKE SHOE AND LINING	
Type	Bonded
Lining Thickness	.400" (Nominal)
Width	1.84"
Length	4.82"
Braking Area	8.50" Sq. In./Segment
Maximum Wear (Minimum Thickness Allowed)	Not less than 1/32" lining at any point or a minimum shoe and lining thickness of .180"
MASTER CYLINDER	
Piston Bore Diameter	1"
Maximum Bore Diameter Allowable (After Honing)	.002" o.s.
Residual Valve	Rear Brakes Only
DISC SPLASH SHIELD	
Type	Vented-Stamped Steel
Mounting	3 Bolts to Knuckle
RESIDUAL VALVE	
Type	Pressure Control
P.S.I. Cut In	300 P.S.I.
Reduction in Rate of Rear Line Pressure Build Up	After 300 P.S.I. Actuation Pressure.
WHEELS	
Type	Drop Center
Diameter	14 × 4-1/2 J Special

BENDIX DISC BRAKE

DISC BRAKE	
Type	Fixed Caliper—Disc
Location	Front Wheels Only
Master Cylinder Reservoir	Horizontal Dual
Proportioning Valve Location	Inside Stub Frame Rail
Brake Adjustment	None (Automatic)
Residual Valve Location	In Tandem Master Cylinder (to rear brakes only)
CALIPER ASSEMBLY	
Shoe and Lining Removal	Bottom—Caliper Removed
Number of Pistons	4 Each Assembly

Piston Diameter	1.9980"—1.9959"
Piston Bore Diameter	2.0015"—2.0000"
Maximum Allowable (After Honing)	.002" Oversize
Piston Seals	Moulded Rubber—1 per piston
Piston Dust Boots	Moulded Rubber—4 per Caliper Assy.
Piston Return Springs	1 per piston
Bleeder Screw Location	On Inner Housing (top)
Cross Over Passage Seals	Rubber "O" Ring (2 per caliper)
BRAKING DISC	
Type	Ventilated—Cast Iron
Diameter—Outside	11.19"
Inside	6.876
Disc Run Out (Maximum Allowable) T.I.R.	.005" (.001" in 30° and no more than 3 reversals in 360°
Disc Surface Finish	40 micro inches
Disc Thickness	.886"-.878"
Minimum Thickness Allowable for wear before replacement	.816"
Disc Parallelism (Total variation in thickness)	.0005"
BRAKE SHOE AND LINING	
Type	Integrally Molded
Lining and Shoe Thickness	.605"-.625"
Length	5.294-5.299"
Minimum Lining Thickness allowed	.030" Thickness Lining at any point or a minimum shoe and lining thickness of .172"
MASTER CYLINDER	
Type	Tandem Piston
Piston Bore Diameter	1.125"
Maximum Bore Diameter Allowable (after honing)	.002"
Residual Pressure Valve	Rear brake outlet only
DISC SPLASH SHIELD	
Type	Non-Vented
Mounting	3 Bolt
PROPORTIONING VALVE	
Type	Pressure Control
Cut-In Pressure	300 P.S.I.
Rear line pressure proportioned at 2.3:1 ratio	
WHEELS	
Type	Drop Center
Diameter	14 × 5-1/2 JK Special
Mounting Stud Circle	4-1/2" 5 bolt
REAR BRAKES	
Rear Wheel Shoe and Lining	Cycleweld—Molded & Bonded
Size	10 × 2-1/2 inch
Cylinder Bore Diameter	15/16"

KELSEY-HAYES DISC BRAKE

(Floating Caliper)

Type of Brake	Floating Caliper
Location	Front Wheels Only
Master Cylinder	Horizontal Tandem (Dual)
Metering Valve Location	Left Front Frame Rail
Brake Adjustment	None Required
Residual Valve Location (Rear Brakes Only)	In Master Cylinder Outlet
CALIPER ASSEMBLY	
Shoe and Lining Removal	Bottom, Caliper Removed
Number of Pistons	1 Each Unit
Piston Diameter	2-3/4" (2.751"-2.753")
Piston Bore Diameter Maximum Allowable (After Honing)	2.757"
Piston Seal	Moulded Rubber (Square Section) .126" Wide—120" Radial Thickness
Dust Boot	Moulded Rubber (External) 1 Per Unit

Bleeder Screw Location	Inner Housing 3/8"
BRAKING DISC	
Type	Ventilated Cast Iron
Diameter (Outside)	11.75"
(Inside)	7.725"
Disc Run-out (Maximum Allowable) T.I.R.	.0025"
Disc Surface Finish	15 to 80 Micro Inches
Disc Thickness	1.250 ± 1.240
Disc Parallelism (Total Variation in Thickness)	.0005"
BRAKE SHOE AND LINING	
Type	Bonded
Lining Thickness	.460" (Nominal)
Wide	1.80" (At Center)
Long	6.02"
Braking Area	10.0"
Maximum Wear (Minimum Thickness Allowed)	Not less than .030" Lining at any point or a minimum shoe and lining thickness of .180 Inch
MASTER CYLINDER	
Piston Bore Diameter	1-1/8"
Maximum Bore Diameter Allowable (After Honing)	.002" O.S.
Residual Valve	Rear Brakes Only
DISC SPLASH SHIELD	
Type	Vented-Stamped Steel
Mounting	3 Bolts to Knuckle
WHEELS	
Type	Drop Center
Diameter	15 x 5.50-15 x 6.50

TIGHTENING REFERENCE

POWER BRAKES

Pedal Link to Pedal Bolt	30 Foot Pounds
Master Cylinder Mounting Nuts	100 Inch Pounds
Power Brake Unit to Dash Panel Nuts	150 Inch Pounds

KELSEY HAYES DISC BRAKES

	Foot-Pounds	Inch-Pounds
Caliper Mounting Bolts	50-80	
Caliper Assembly Bridge Bolts	70-80	
Disc Splash Shield Bolts		17
Caliper Bleeder Screw		100
Shoe Clips (Retainers)	7-9	
Brake Tube Fitting Nuts to proportioning valve		90-100
Wheel Assembly to Front Wheel Hub and disc assembly	55	

BENDIX DISC BRAKES

	Foot-Pounds	Inch-Pounds
Caliper Mounting Bolts	75-105	
Caliper Assembly (Bridge Bolts)	120-140	1450-1700
Disc Splash Shield Bolts	17	
Caliper Bleeder Screw	10	120
Brake Tube Fitting Nuts to Proportioning Valve		90-100
Wheel Assembly to Front Wheel Hub and Disc Assembly Nuts	55	

CLUTCH

CONTENTS

	Page
CLUTCH—SERVICING	4
CLUTCH HOUSING ALIGNMENT	10
CLUTCH PEDAL FREE PLAY	3
CLUTCH RELEASE BEARING	9
CLUTCH RELEASE FORK	9
CRANKSHAFT TO TRANSMISSION DRIVE PINION PILOT BUSHING	8
SERVICE DIAGNOSIS	2
SERVICE PROCEDURES	3
SPECIFICATIONS	12
STEAM CLEANING PRECAUTIONS	12
TIGHTENING REFERENCE	13
TORQUE SHAFT AND BEARINGS	10

GENERAL INFORMATION

The clutches used in all models are a single, dry disc type (Figs. 1 and 2), with no adjustment for wear being provided in the clutch itself. The clutch pedal linkage, however, is provided with an adjustable rod to maintain specified pedal free play.

The three pressure plate release levers are preset during manufacture and no attempt should be made to adjust them in service.

The clutch sizes for the various car models are described in specification charts at end of this section.

The Semi-Centrifugal type clutch (Fig. 2) combines the feature of low pedal effort with that of a clutch capable of transmitting the full torque of the engine.

Six centrifugal rollers are assembled between the pressure plate and cover. These rollers are provided to increase the normal load on the disc assembly at higher engine speeds. As the engine speed increases, the centrifugal force of the rollers causes them to act as wedges between the cover and pressure plate and exert greater force against the disc.

Clutch Pedal and Bracket (Figs. 3, 4, 5, 6)

The clutch pedal is connected to the torque shaft through a vertically positioned rod. A non-adjustable over-center spring is provided between the pedal and the pedal bracket to allow easy clutch pedal operation.

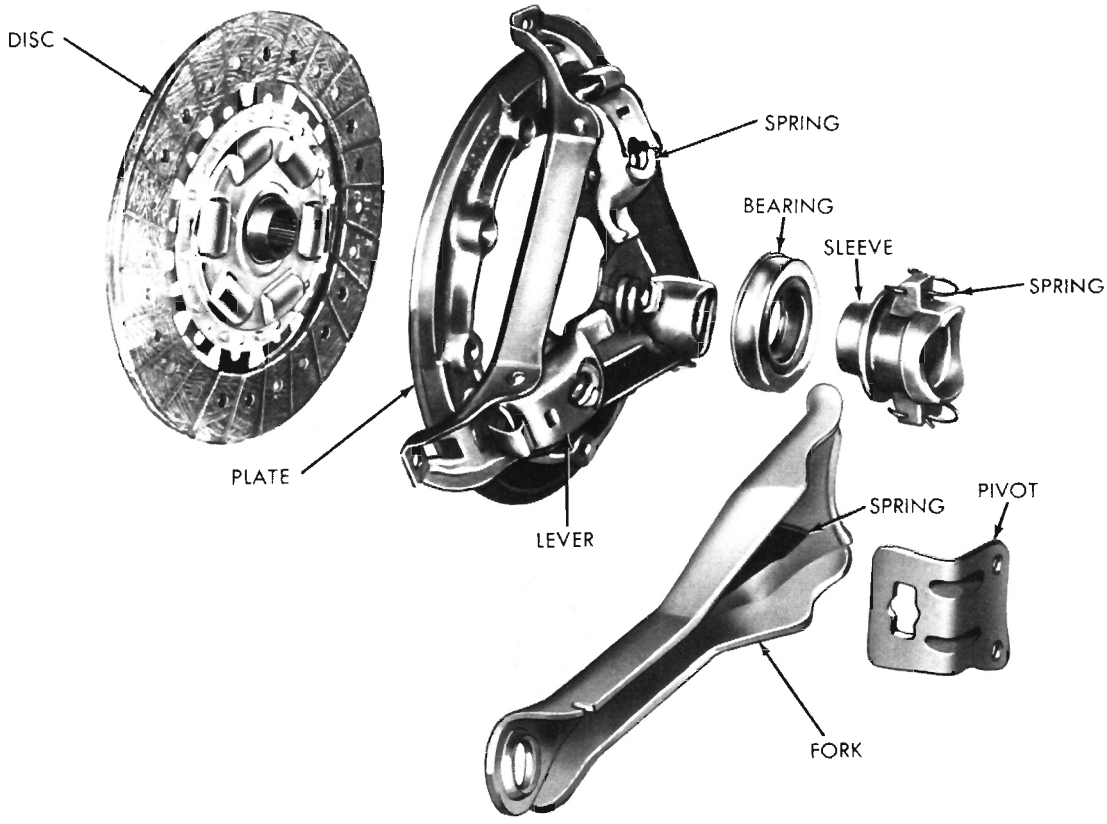

Fig. 1—Clutch Disassembled

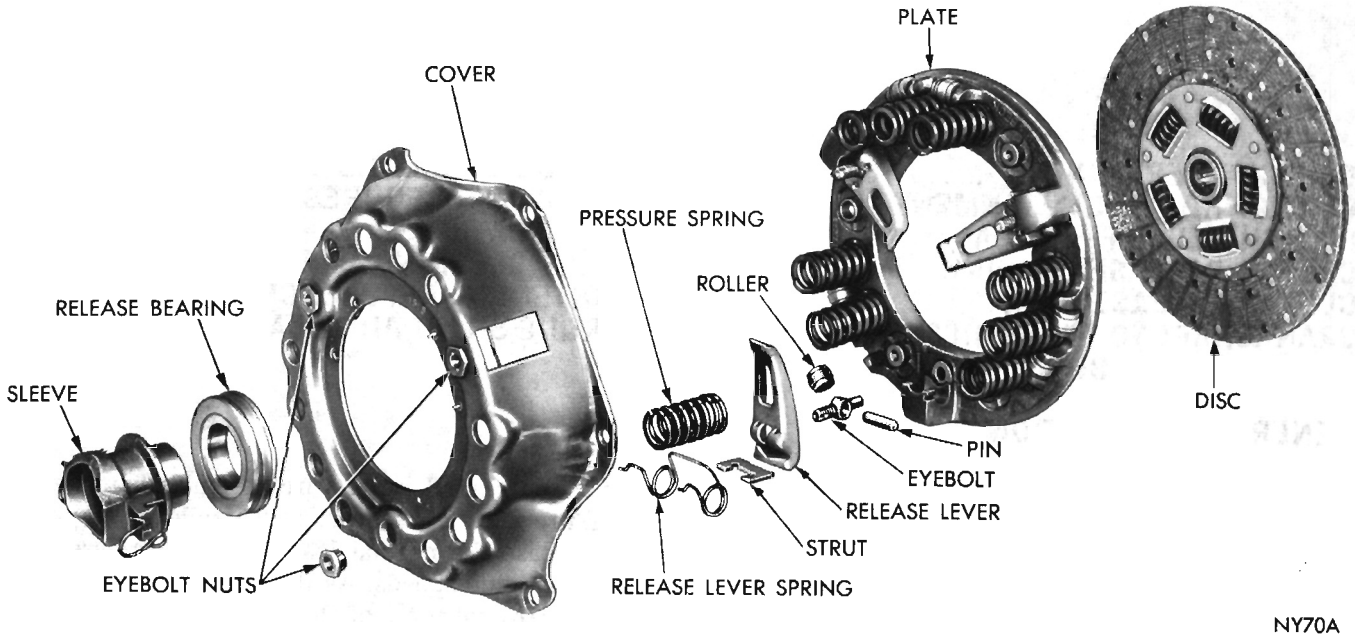

Fig. 2—Clutch Disassembled (Semi Centrifugal)

The upper end of the clutch pedal pivots in the pedal bracket on two needle bearings or nylon bushings. These bearings do not require periodic lubrication.

SERVICE DIAGNOSIS

Condition	Possible Cause	Correction
CLUTCH CHATTER	(a) Worn or damaged disc assembly.	(a) Replace disc assembly.
	(b) Grease or oil on disc facings.	(b) Replace disc assembly.
	(c) Improperly adjusted cover assembly.	(c) Replace clutch assembly.

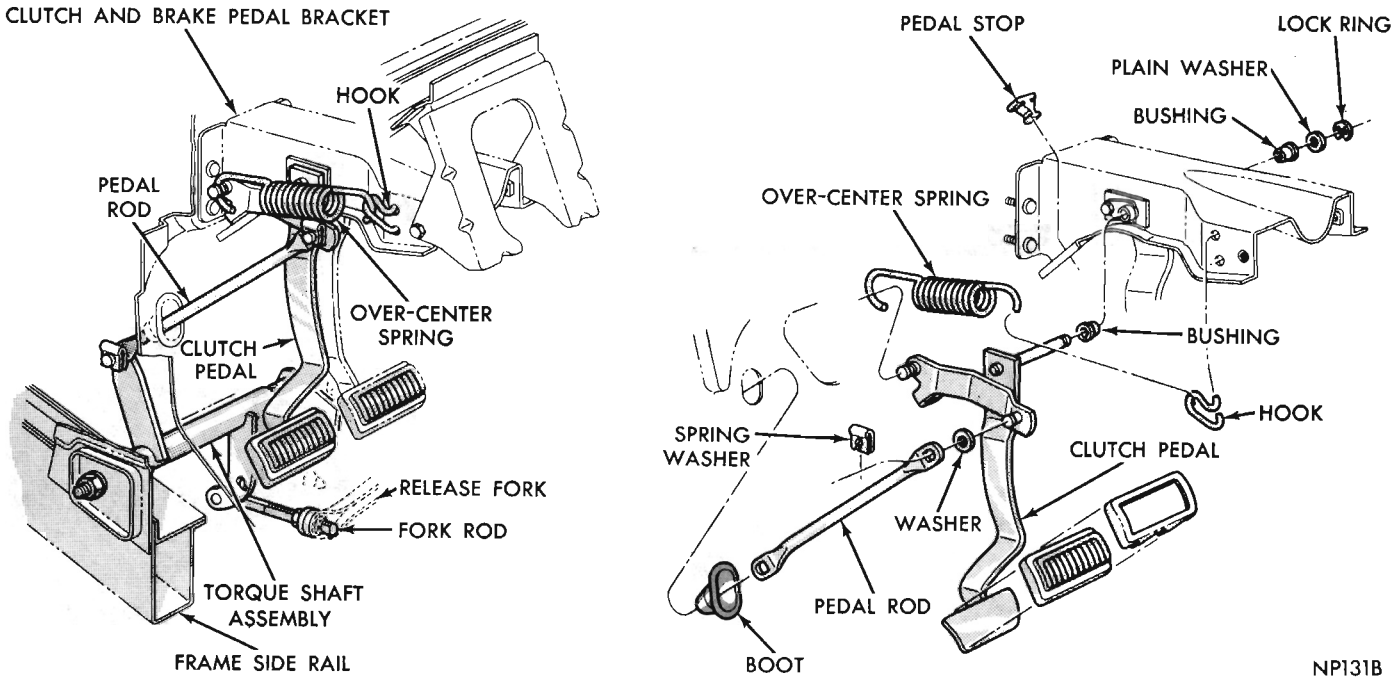

Fig. 3—Clutch Pedal and Linkage (Valiant-Barracuda 6 Cyl.)

Condition	Possible Cause	Correction
CLUTCH SLIPPING	(a) Burned, worn, or oil soaked facings. (b) Insufficient pedal free play. (c) Weak or broken pressure springs.	(a) Replace disc assembly. (b) Adjust release fork rod. (c) Replace clutch assembly.
DIFFICULT GEAR SHIFTING	(a) Excessive pedal free play. (b) Worn or damaged disc assembly. (c) Improperly adjusted cover assembly. (d) Clutch disc splines sticking.	(a) Adjust release fork rod. (b) Replace disc assembly. (c) Replace clutch assembly. (d) Remove disc assembly and free up splines or replace disc.
CLUTCH NOISY	(a) Dry clutch linkage. (b) Worn release bearing. (c) Worn disc assembly. (d) Worn release levers. (e) Worn or dry pilot bushing. (f) Dry contact-pressure plate lugs in cover.	(a) Lubricate where necessary. (b) Replace release bearing. (c) Replace disc assembly. (d) Replace clutch assembly. (e) Lubricate or replace bushing. (f) Lubricate very lightly.

SERVICE PROCEDURES

CLUTCH PEDAL FREE PLAY

The only adjustment required for the clutch is the pedal linkage adjustment to provide the prescribed clutch pedal free play. The adjustment is necessary to restore pedal free play reduced by normal clutch wear.

Adjusting Clutch Pedal Free Play

(1) Inspect condition of clutch pedal rubber stop (Figs. 3, 4, 5, 6). If stop is damaged, install a new one.

(2) On models equipped with 3 speed transmissions disconnect gearshift interlock rod by loosening rod swivel clamp screw (Fig. 7).

(3) Adjust fork rod by turning self-locking adjusting nut (Figs. 8, 9, 10, 11) to provide 5/32 inch free movement at end of fork. This movement will provide prescribed one-inch free play at pedal (Figs. 3, 4, 5 or 6).

(4) Adjust interlock rod as described below.

Gearshift Interlock (Fig. 7)

(1) Disconnect clutch rod swivel from interlock pawl.

(2) Adjust clutch pedal free play as specified.

(3) When first-reverse lever on transmission is in

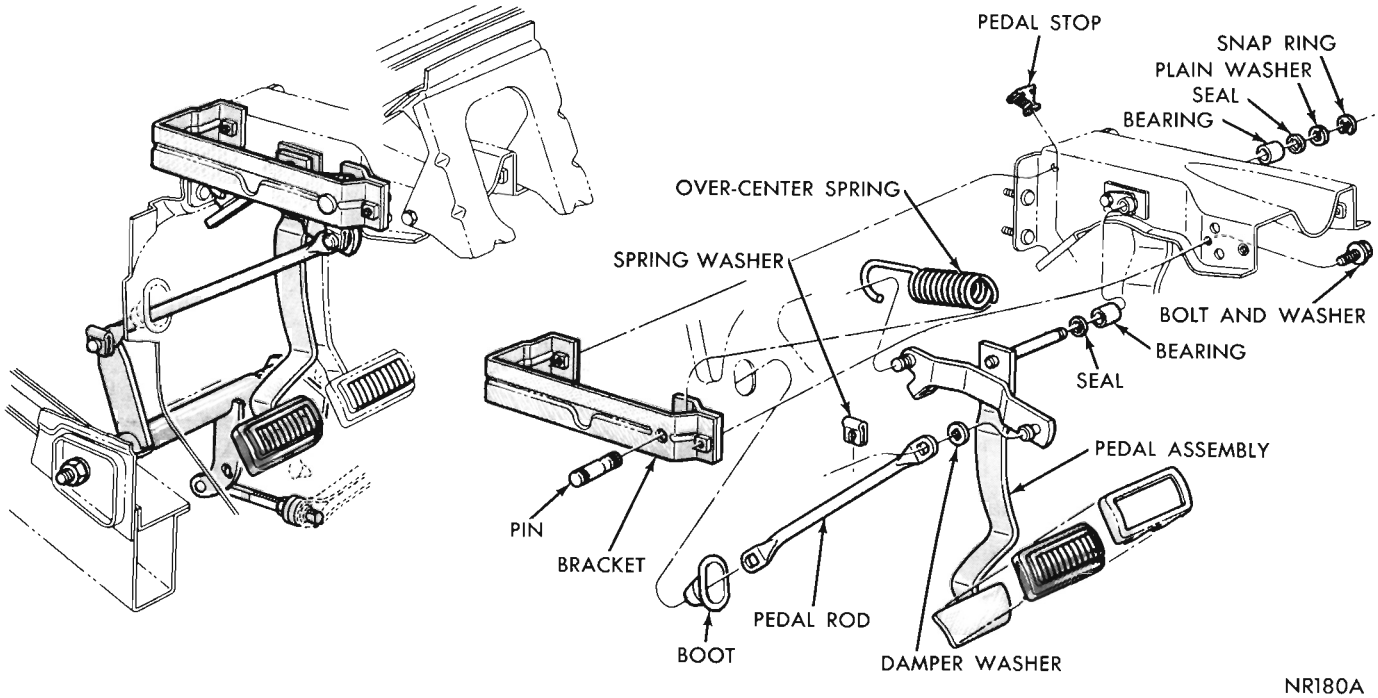

Fig. 4—Clutch Pedal and Linkage (Valiant-Barracuda 8 Cyl.)

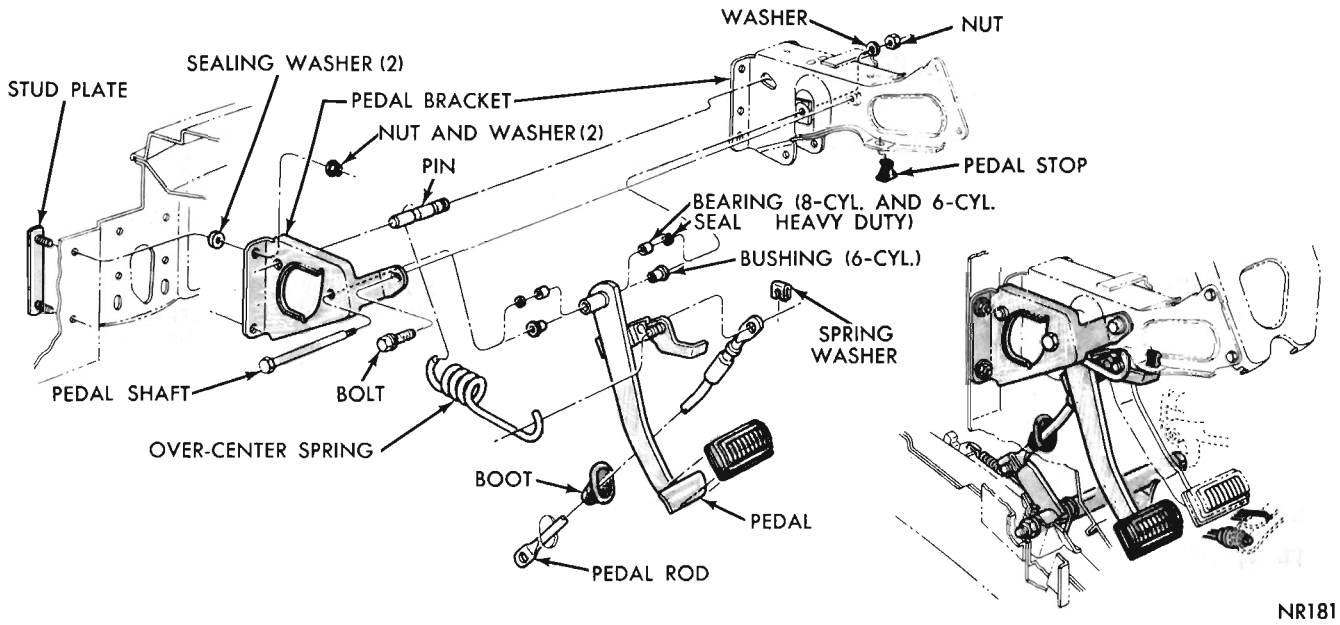

Fig. 5—Clutch Pedal and Linkage (Satellite)

neutral (middle detent) position, the interlock pawl will enter the slot in first-reverse lever.

(4) Loosen swivel clamp bolt and slide swivel on rod to enter pawl. Install washers and clip. Hold interlock pawl forward and tighten swivel clamp bolt to 100 inch-pounds. Clutch pedal has to be in full returned position during this adjustment.

CAUTION: Do not pull clutch rod rearward to engage swivel in the pawl.

(5) Shift transmission in normal manner from neutral to first, and from neutral to reverse (disengage clutch while shifting and engage clutch when in gear). Clutch action should be normal.

(6) Disengage clutch and shift halfway to first or reverse. Clutch should now be held down by interlock to within 1 or 2 inches of floor.

CLUTCH—SERVICING

Improper operation or excessive wear may impair the clutch function to a point where it may be necessary to remove and replace the disc and/or clutch assembly. Should this operation become necessary, proceed as follows:

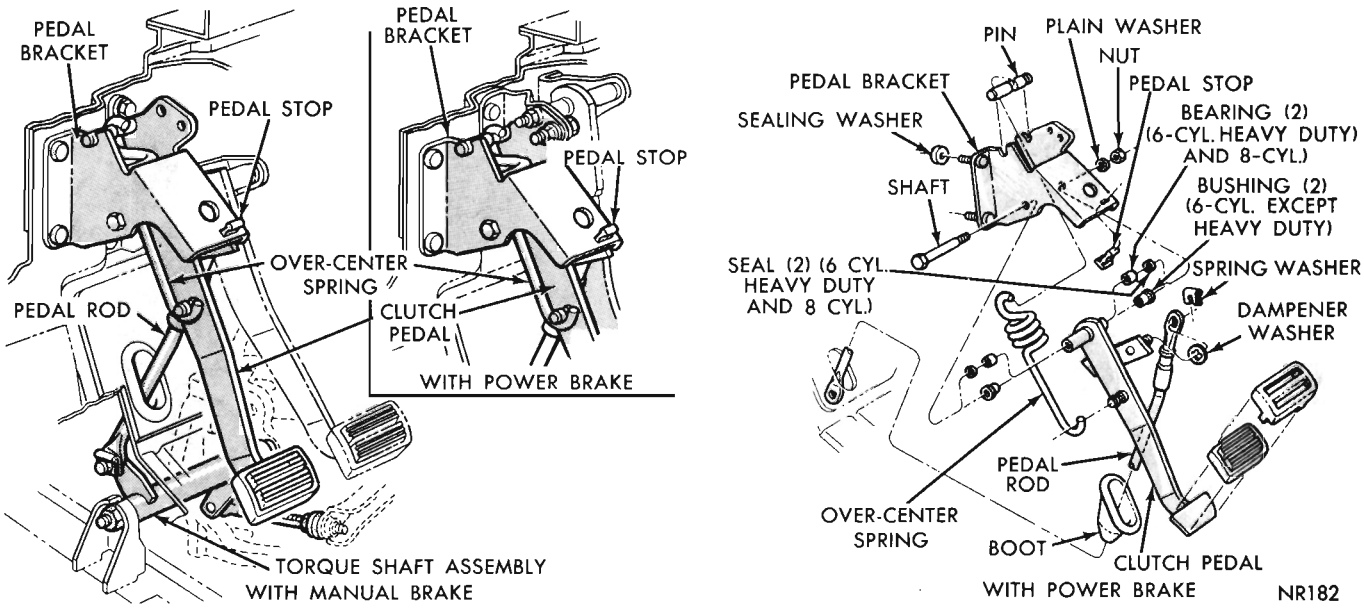

Fig. 6—Clutch Pedal and Linkage (Fury)

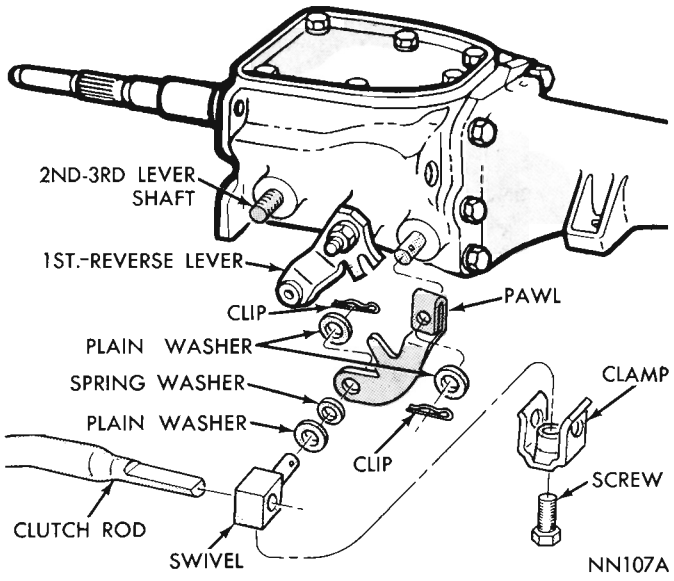

Fig. 7—Gearshift Interlock

Removal

(1) Remove transmission. See "Manual Transmission," Group 21, for detailed procedure.

(2) Remove clutch housing pan.

(3) Remove return spring from clutch release fork and clutch housing or torque shaft lever (Fig. 8, 9, 10 or 11).

(4) Remove spring washer securing fork rod to torque shaft lever and remove rod from torque shaft and release fork (Figs. 8, 9, 10 or 11).

(5) On models with the 3-speed transmission, remove clip and plain washer securing interlock rod to torque shaft lever and remove spring washer, plain washer and rod from torque shaft.

(6) Remove clutch release bearing and sleeve assembly from clutch release fork (Fig. 12), then remove release fork and boot from clutch housing.

(7) Mark clutch cover and flywheel (Fig. 13) to maintain their same relative positions when reinstalling clutch assembly.

(8) Loosen and back off clutch cover attaching bolts, one or two turns at a time, in succession, to avoid bending cover flange.

(9) Remove clutch assembly and disc from clutch housing.

CAUTION: Handle clutch and disc carefully to avoid contaminating the friction surfaces.

Cleaning and Inspection

(1) Use compressed air to clean dust out of clutch housing. Inspect for oil leakage through engine rear main bearing oil seal and transmission drive pinion seal. If leakage is noted, it should be corrected at this time.

(2) Friction face of flywheel should have a uniform appearance throughout entire disc contact area. If there is evidence of heavy contact on one portion of wear circle and a very light contact 180° from that portion, flywheel may be improperly mounted or sprung. In either case, a dial indicator mounted on clutch housing with plunger in contact with wear circle, should show **no more** than .003 inch runout throughout a complete rotation of flywheel.

(3) Friction face of flywheel should also be free from discoloration, burned areas, small cracks, grooves or ridges.

(4) The bushing in end of crankshaft should be smooth and show no excessive wear. A new transmission main drive pinion, or C-3181 Bushing Installing

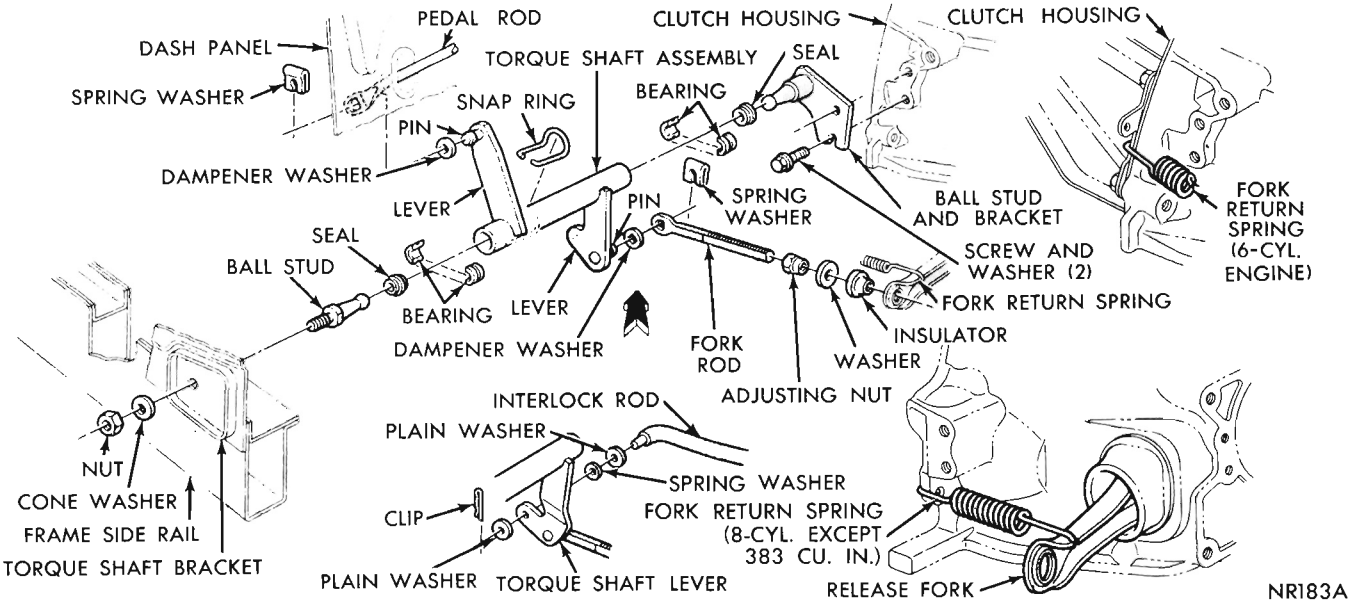

Fig. 8—Torque Shaft and Linkage (Valiant—Barracuda)

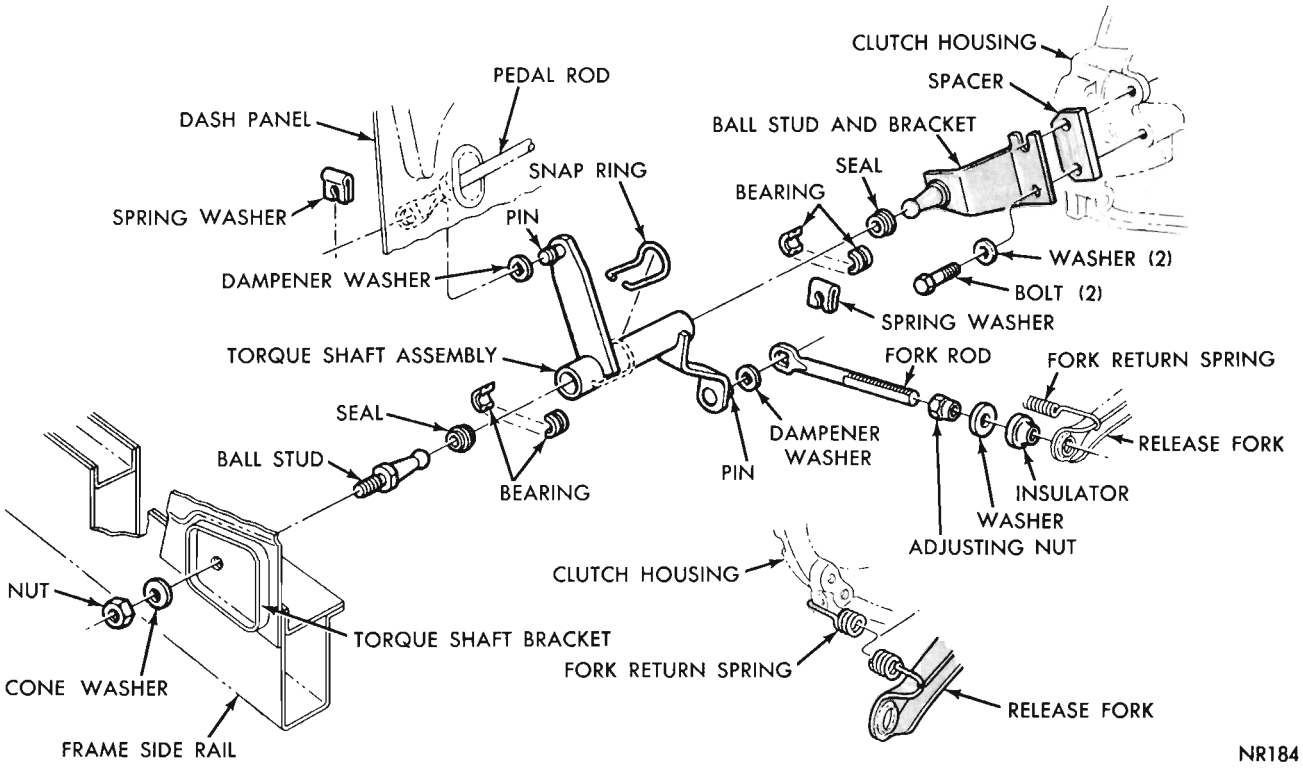

Fig. 9—Torque Shaft and Linkage (Barracuda 383 Cu. In.)

and Burnishing Tool, can be used to gauge size of bushing. The tool should be a snug fit in bushing.

If necessary to replace bushing, proceed as detailed under "Crankshaft to Transmission Drive Pinion Pilot Bushing."

(5) The end of the transmission main drive pinion should be smooth and bright, without grooves and ridges.

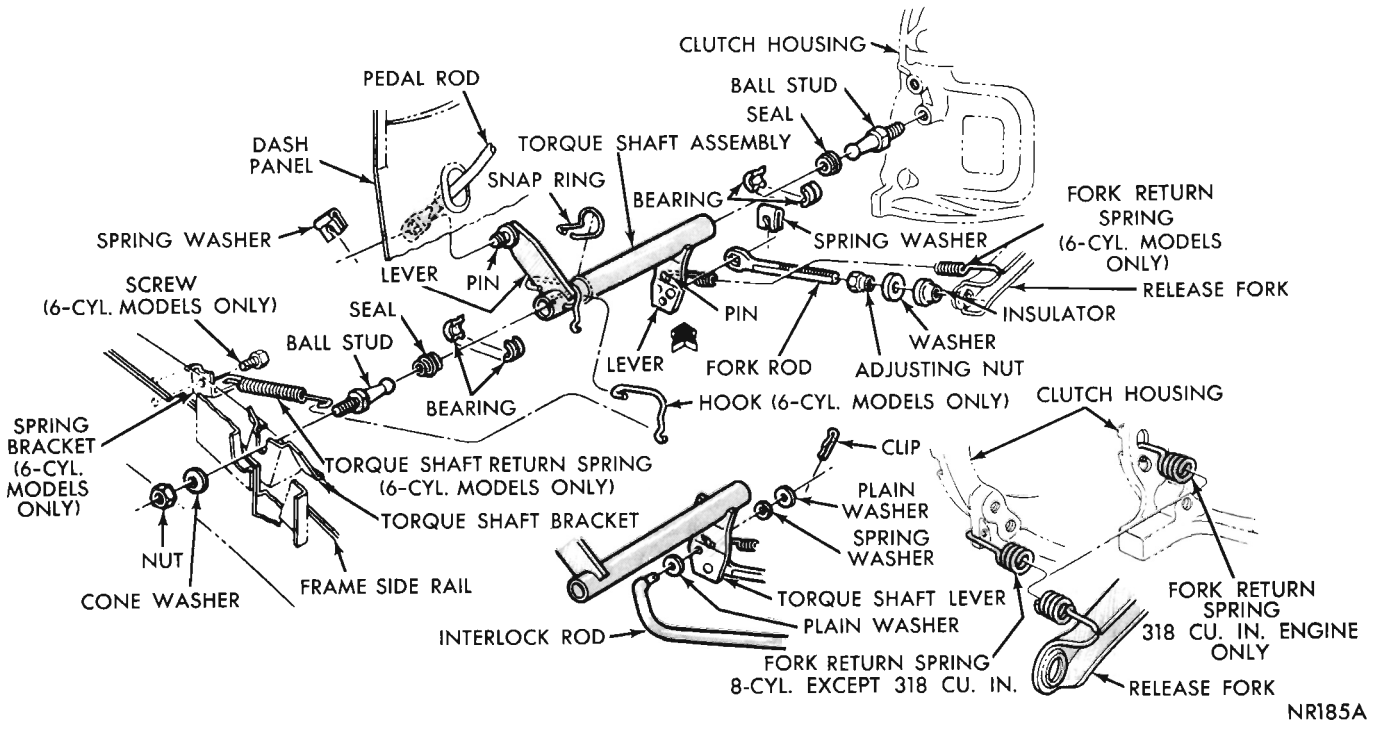

Fig. 10—Torque Shaft and Linkage (Satellite)

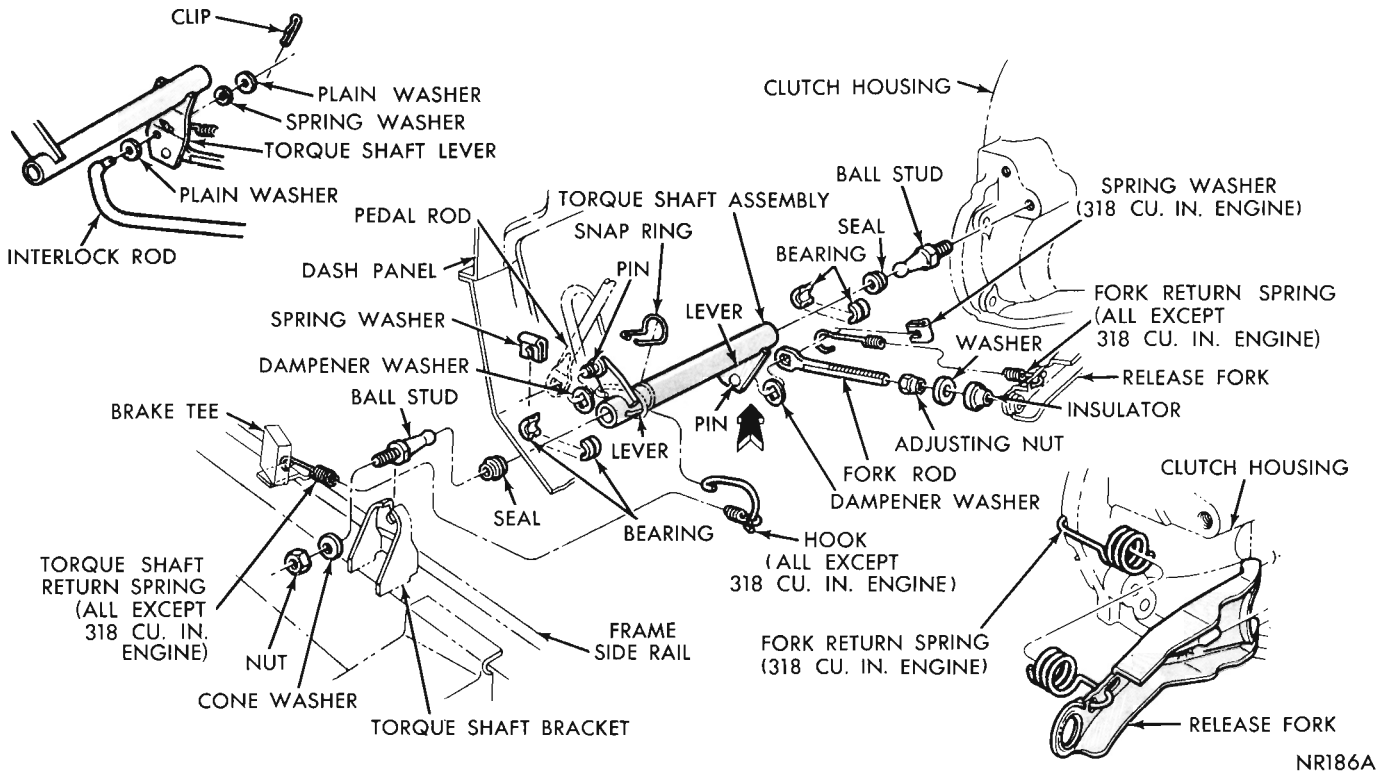

Fig. 11—Torque Shaft and Linkage (Fury)

(6) The disc assembly should be handled without touching facings. Replace disc if facings show evidence of grease or oil soakage, or wear to within less than .015 inch of the rivet heads. The hub splines and splines on transmission main drive pinion should be a snug fit without signs of excessive wear. Metallic portions of disc assembly should be dry and clean and show no evidence of having been hot. Each of the arched springs between facings should be unbroken and all rivets should be tight.

(7) Wipe friction surface of pressure plate with kerosene, mineral spirits or other suitable solvent.

(8) Using a straight edge, check pressure plate for flatness. The pressure plate friction area should be flat within .005 inch and free from discoloration, burned areas, cracks, grooves or ridges.

(9) Inner ends of release levers should have a uniform wear pattern.

(10) Using a surface plate, test cover for flatness. All sections around attaching bolt holes should be in contact with surface plate within .015 inch.

(11) The cover should be a snug fit on pressure plate lugs.

If the clutch assembly does not meet these requirements, it should be replaced.

(12) Examine condition of clutch release bearing. **CAUTION: The clutch release bearing is a prelubricated, sealed thrust bearing and should not be immersed in solvent.**

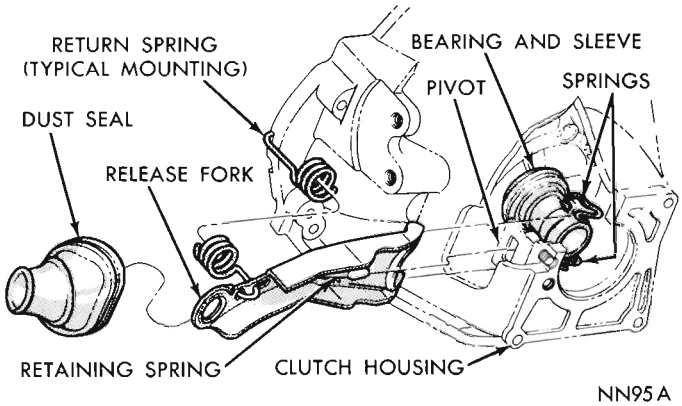

Fig. 12—Clutch Release Fork, Bearing and Sleeve

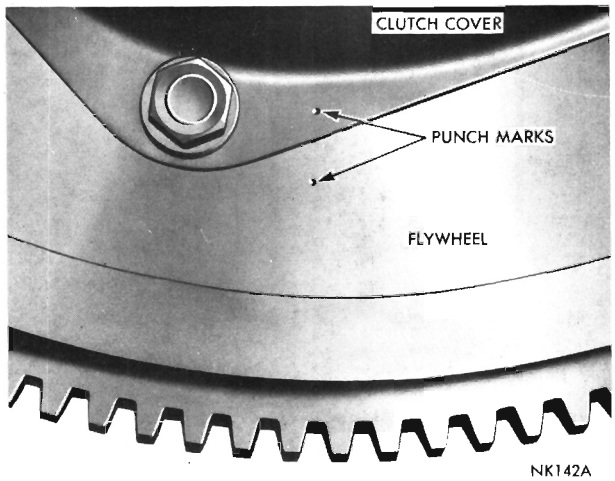

Fig. 13—Marking Clutch and Flywheel

The bearing should turn freely, when held in the hands under light thrust load, with no evidence of roughness.

(13) If bearing is noisy, rough or dry, install a new one on sleeve as detailed under "Clutch Release Bearing."

Installation

(1) Lubricate transmission drive pinion pilot bushing in end of crankshaft with about one-half teaspoon of special long-life chassis grease or Multi-Mileage Lubricant, Part Number 2525035. Place lubricant in radius back of bushing.

(2) Clean the surfaces of flywheel and pressure plate thoroughly with fine sandpaper or crocus cloth, and make certain that all oil or grease has been removed.

(3) Hold clutch disc, pressure plate and cover in mounting position, with springs on disc damper facing away from flywheel. **Do not touch disc facing, as contamination may result in clutch chatter.** Insert C-360 Clutch Disc Aligning Arbor through hub of disc and into bushing (Fig. 14). If C-360 Arbor is not available, use a spare transmission drive pinion.

(4) Install clutch cover attaching bolts (after aligning balance punch marks (Fig. 13), but do not tighten them.

(5) **To avoid distortion of the clutch cover, bolts should be tightened a few turns at a time (alternately) until they are all tight.** Tighten 5/16 inch bolts to 200 inch-pounds, 3/8 inch bolts to 30 foot-pounds. Remove C-360 Arbor (or drive pinion if used).

(6) Fill cavity of bearing sleeve with Multi-Mileage Lubricant, Part Number 2525035, or Automotive Multi-Purpose Grease, NLGI grade 2 EP. Also, apply a film of this same lubricant to release fork pads of sleeve (Fig. 15).

(7) Position release bearing and sleeve assembly in clutch housing as far forward as possible.

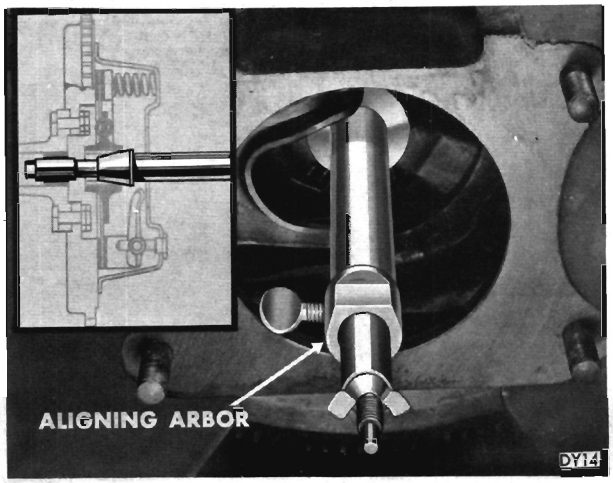

Fig. 14—Clutch Disc Aligning Arbor

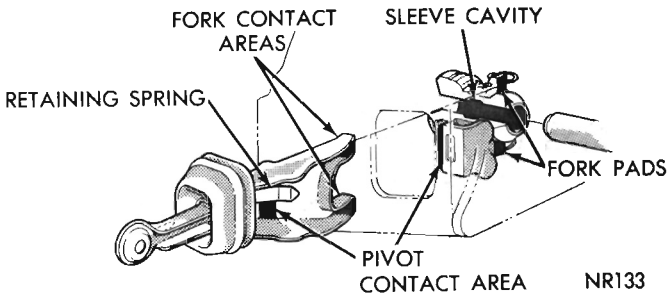

Fig. 15—Clutch Lubrication Points

(8) Lubricate fork fingers and retaining spring at the pivot contact area (Fig. 15) with a film of Multi-Mileage Lubricant, Part Number 2525035, or Automotive Multi-Purpose Grease, NLGI grade 2 EP.

(9) Engage fork fingers under clutch sleeve retaining springs. **Be sure retaining springs on sleeve have lateral freedom** (Fig. 12).

(10) Be sure groove in dust seal is engaged on seal opening flange in clutch housing (Fig. 12).

(11) Insert threaded end of fork rod assembly in hole in end of release fork (Figs. 8, 9, 10 or 11). Install eye end of fork rod on torque shaft lever pin and secure with spring washer. (Spring washer used only with 318 Cu. In. Engine on Fury models).

(12) Install return spring to clutch release fork and clutch housing or torque shaft lever (Fig. 8, 9, 10 or 11).

(13) On models with 3-speed transmission, install spring washer, plain washer and interlock rod on torque shaft lever and secure with plain washer and clip.

CAUTION: Do not lubricate splines or pilot end of transmission drive pinion, when installing transmission. These areas must be kept dry.

(14) Install C-730 Pilot Studs in clutch housing and install transmission as detailed in "Transmission Installation," Group 21.

(15) Adjust clutch linkage as detailed under "Adjusting Clutch Pedal Free Play."

CRANKSHAFT TO TRANSMISSION DRIVE PINION PILOT BUSHING

See Paragraph "Clutch Cleaning and Inspection," to determine serviceability of bushing.

Removal

(1) Position outer portion of C-3185 Bushing Remover Tool in contact with button on end of center screw.

(2) Thread outer portion of tool tightly into bushing.

(3) Turn center screw in through outer portion to remove bushing.

Installation

(1) Soak new bushing in engine oil prior to installation.

(2) Remove nut and cup from C-3181 Installing and Burnishing Tool.

(3) Place new bushing on tool shaft and drive bushing flush with end of crankshaft. **Use a soft hammer to prevent damaging tool.**

(4) To remove installer, install cup and nut. As nut is tightened, tool will burnish bushing.

(5) Insert about one-half teaspoon of special long-life chassis grease or Multi-Mileage Lubricant, Part Number 2525035, in radius back of bushing in end of crankshaft.

CLUTCH RELEASE FORK

Removal

(1) Remove return spring from clutch release fork and clutch housing or torque shaft lever (Fig. 8, 9, 10 or 11).

(2) Remove spring washer securing fork rod to torque shaft lever and remove rod from torque shaft and release fork.

(3) Pry dust seal out of clutch housing and remove from release fork (Fig. 12).

(4) Grasp outer end of clutch fork and pull fork out and free of retaining springs and pivot (Fig. 12). **The clutch fork has a riveted flat retaining spring that is engaged in a hole in the pivot. The clutch release fork pivot is an 'L' shaped bracket bolted inside the clutch housing.**

(5) Remove fork from clutch housing.

Installation

(1) **The grease recommended for use during reassembly procedures is Automotive Multi-Purpose Grease NLGI Grade 2 E.P. or Multi-Mileage Lubricant, Part Number 2525035.**

(2) Before installing release fork, lubricate both sides of fork contact areas, pivot contact area, edge of pivot, also the cavity inside clutch sleeve and the fork pads (Fig. 15).

(3) Install clutch release fork in housing, being careful to engage flat retaining spring in hole in pivot and under retaining springs of bearing sleeve.

(4) Install dust seal over release fork and engage groove of seal in clutch housing.

(5) On **all models,** insert threaded end of fork rod assembly in hole of release fork (Figs. 8, 9, 10, 11). Install eye end of fork rod on torque shaft lever pin and secure with spring washer.

(6) Install return spring to clutch release fork and clutch housing or torque shaft lever (Fig. 8, 9, 10 or 11).

CLUTCH RELEASE BEARING (Removed from Clutch)

Removal

(1) Examine condition of bearing. If bearing is noisy, rough or dry when rotated by hand under light thrust load, remove bearing from sleeve.

(2) Support bearing and sleeve in a vise or press and carefully press out sleeve.

(3) Clean sleeve in solvent and remove all old lubricant.

Assembly

CAUTION: Exercise care when installing a new clutch release bearing to avoid damaging bearing race. Never drive bearing on sleeve with a hammer. Use either of following two methods.

Vise Method

(1) Position new bearing on sleeve and place old bearing against face of new bearing.

(2) Support parts in a vise and carefully press new bearing on sleeve (Fig. 16). **Make certain bearing is seated on shoulder of bearing sleeve. Rotate bearings as they are pressed together.**

Press Method

(1) Support sleeve on press bed.

(2) Position new bearing on sleeve and place old bearing on new one.

(3) Bring press ram into contact with old bearing and apply sufficient pressure to **seat new bearing against shoulder of sleeve. Rotate bearings as they are pressed together.**

Lubrication

Before installing bearing and sleeve assembly, lubricate parts as follows:

(1) Fill cavity of bearing sleeve with Multi-Mileage Lubricant, Part Number 2525035, or Automotive Multi-Purpose Grease, NLGI grade 2 EP (Fig. 15).

(2) Also, apply a film of this same lubricant to release fork pads of sleeve.

(3) A film of the same type lubricant should be applied to the pivot contact area of fork retaining spring and contact areas of fork fingers.

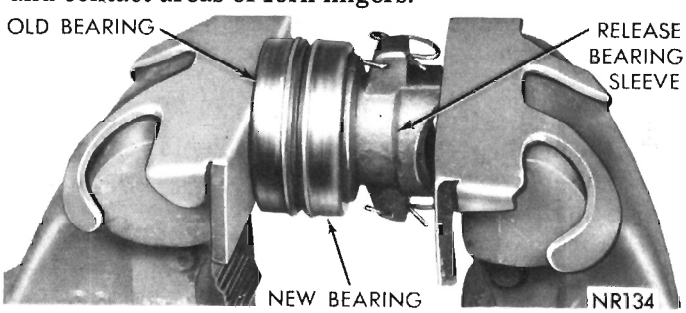

Fig. 16—Replacing Clutch Release Bearing

Installation

(1) Install bearing and sleeve assembly in clutch housing engaging fork under sleeve springs (Fig. 12). **Be sure springs have lateral freedom.**

CAUTION: Do not lubricate splines or pilot end of transmission drive pinion, when installing transmission. These areas must be kept dry.

(2) Install C-730 Pilot Studs in clutch housing and install transmission as detailed in "Transmission Installation," Group 21.

(3) Adjust clutch linkage as detailed in "Adjusting Clutch Pedal Free Play."

TORQUE SHAFT AND BEARINGS

Removal

(1) On all models, remove spring washer securing pedal rod to torque shaft lever pin (Figs. 8, 9, 10, 11) and remove pedal rod from pin.

(2) On models equipped with 3-speed transmission, remove clip and plain washer securing gearshift interlock rod to torque shaft lever and remove spring washer, plain washer and rod from torque shaft.

(3) Remove return spring from clutch release fork and clutch housing or torque shaft lever (Fig. 8, 9, 10 or 11).

(4) On **Satellite 6-cylinder models,** detach outer torque shaft return spring from hook attached to torque shaft lever and spring bracket (Fig. 10). Remove hook.

(5) On **Fury models, except 318 cu. in. engines,** detach outer torque shaft return spring from hook attached to torque shaft lever and brake tee (Fig. 11). Remove hook.

(6) Remove spring washer securing fork rod assembly to torque shaft lever pin and remove rod from pin.

(7) Remove nut and cone washer from frame end of torque shaft ball stud.

(8) On **Valiant and Barracuda models,** remove two screws and washers securing ball stud and bracket to clutch housing (Fig. 8 or 9).

(9) On **Satellite and Fury models,** unscrew ball stud from clutch housing (Fig. 10 or 11).

(10) Slide or lift frame end of torque shaft from torque shaft bracket, depending on type of bracket, and remove torque shaft assembly from vehicle.

(11) Disassemble torque shaft assembly by removing snap ring, ball studs, seals and bearings.

Cleaning and Inspection

(1) Clean all parts in kerosene, mineral spirits or other suitable solvent. Remove all grease from inside torque shaft.

(2) The two ball studs should be bright and free from scratches, ridges or other surface imperfections.

(3) The inner surfaces of bearings should also be smooth and free from surface scratches or embedded foreign material. The wear pattern should be uniform over the entire surface.

(4) Replace worn or cracked rubber seals.

Installation

(1) Install new seals on ball studs (Figs. 8, 9, 10 or 11).

(2) Coat counterbored ends of torque shaft, torque shaft bearings and ball studs with Multi-Mileage Lubricant, Part Number 2525035, or Automotive Multi-Purpose Grease, NLGI grade 2 EP.

(3) Install bearings on ball studs and push studs and bearings into torque shaft. Install snap ring on frame end of shaft.

(4) On **Valiant and Barracuda models,** insert ball stud through frame side rail bracket and position inner stud and bracket against clutch housing (Fig. 8 or 9). Install two bracket screws and washers and tighten to 200 inch-pounds except on Barracuda 383 engine, on which they should be tightened to 40 foot-pounds. Install washer and nut on end of outer stud and tighten to 40 foot-pounds.

(5) On **Satellite and Fury models,** place torque shaft in approximate position and thread inner ball stud into clutch housing (Fig. 10 or 11). Tighten stud to 40 foot-pounds. Position frame end of torque shaft in slotted frame bracket. Install lockwasher and nut on stud and tighten to 40 foot-pounds.

(6) Install pedal rod on torque shaft lever pin and secure with spring washer.

(7) Insert threaded end of fork rod assembly in hole in end of release fork (Figs. 8, 9, 10 or 11). Install eye end of fork rod on torque shaft lever pin and secure with spring washer. (Spring washer used only with 318 Cu. In. Engine on Fury models).

(8) Install return spring to clutch release fork and clutch housing or torque shaft lever (Fig. 8, 9, 10 or 11).

(9) On **Satellite models with 6-cylinder engine,** connect outer torque shaft return spring between spring hook on torque shaft and spring bracket forward of torque shaft bracket (Fig. 10).

(10) **On Fury models, except 318 cu. in. engines,** connect outer torque shaft return spring between spring hook on torque shaft and brake tee (Fig. 11).

(11) Adjust clutch linkage.

(12) Adjust interlock rod.

CLUTCH HOUSING ALIGNMENT

When performing adjustments or repairs that involve removing the clutch housing, it will be necessary to check transmission mounting bore runout and squareness to the crankshaft when reassembling.

Bore Runout

(1) Replace one flywheel to crankshaft bolt with a

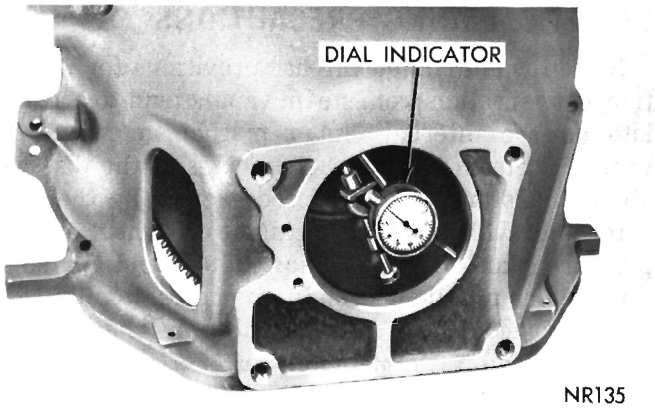

Fig. 17—Measuring Clutch Housing Bore Runout

bolt about 3 inches long. Mount Dial Indicator C-3339 on this bolt with a "C" clamp (Fig. 17).

(2) With C-771 Flywheel Turning Tool, turn flywheel while noting dial indicator needle deflection. Bore out-of-round must not exceed .008 inch maximum total indicator reading, or .004 inch, one-half total indicator reading.

(3) Excess bore runout can be corrected by installing correct size offset dowels (Fig. 18 or 19). These dowels are available in three offset sizes and they **must be** installed in pairs of the same size: .007 inch, Part Number 1736347; .014 inch, Part Number 1736348 and .021 inch, Part Number 1736353.

(4) To illustrate recommended correction procedure, assume total indicator reading is .020 inch, in a direction which approximates 2 o'clock on engine block (Fig. 18 or 19), depending on model.

(5) In this case, housing is off crankshaft centerline .010 inch (one-half total indicator reading) which is .006 inch greater than allowable limit of .004 inch (one-half total indicator reading).

(6) In the case under consideration, installation of two .007 inch dowels will bring runout within the allowable limits of .004 inch or .010 inch minus .007 inch (dowels) which equals .003 inch runout.

(7) The amount of eccentricity of the dowel will

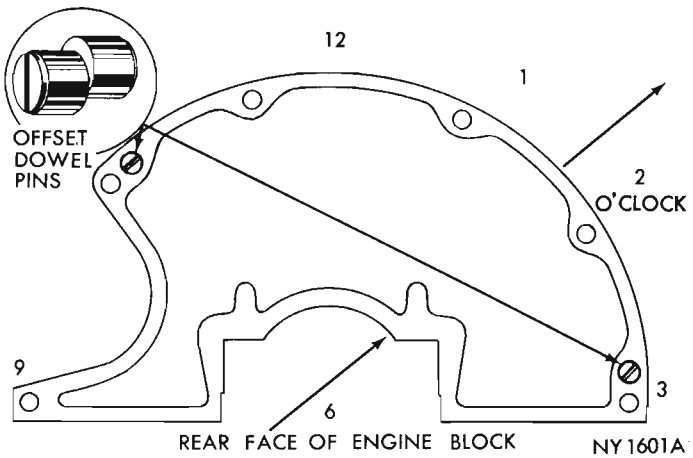

Fig. 18—Offset Dowel Diagram (6 Cyl.)

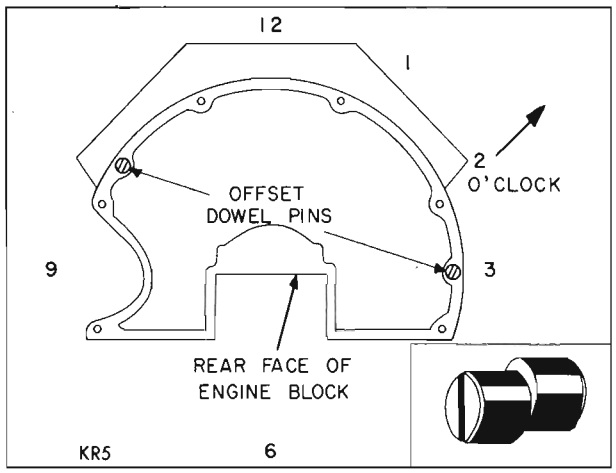

Fig. 19—Offset Dowel Diagram (8 Cyl.)

produce a total indicator reading change of double the dowel eccentricity, therefore, select a pair of dowels with the nearest to one-half of total indicator runout of bore. For runout (total indicator reading) of .009" through .020", use a .007" dowel (No. 1736347); .022" through .034", use .014" dowel (No. 1736348) and .036" through .050", use .021" dowel (No. 1736353).

(8) To install dowels, remove clutch housing and old dowels from rear face of engine block.

(9) Install both dowels with slots parallel and aligned in direction to correct bore runout. (Slot indicates direction of maximum dowel eccentricity.) Both dowels must be inserted into engine block, up to offset shoulder.

(10) Install clutch housing to engine block bolts. Tighten 7/16 inch bolts to 50 foot-pounds and 3/8 inch bolts to 30 foot-pounds.

(11) Remount dial indicator and remeasure bore runout. Small corrections can be made by removing clutch housing (if necessary) and turning dowels with a screwdriver to shift housing and bring bore within limits.

Face Squareness

(1) Relocate Dial Indicator (Fig. 20) and rotate fly-

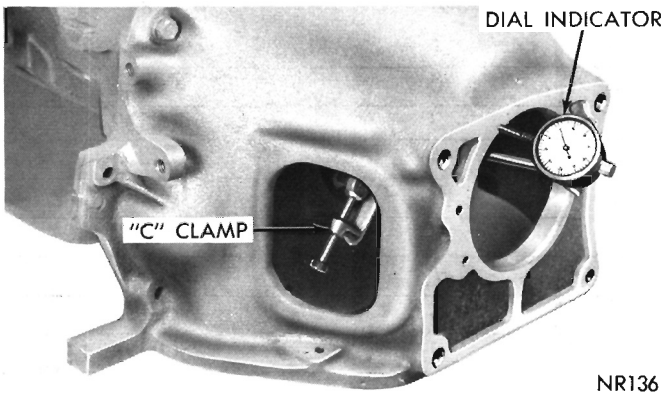

Fig. 20—Measuring Clutch Housing Face Squareness

wheel, using Tool C-771. If total indicator reading is greater than .006 inch, note amount of total indicator reading and location of lowest indicator reading (i.e., point where indicator arm or follower is extended farthest).

(2) To correct squareness, place proper thickness of shim stock between clutch housing and engine block or between transmission and clutch housing. After remeasuring squareness, tighten 7/16 inch housing bolts to 50 foot-pounds and 3/8 inch bolts to 30 foot-pounds.

(3) Install clutch release bearing, fork, linkage and transmission. Adjust clutch linkage.

STEAM CLEANING PRECAUTIONS

Since the clutch housing has provisions for ventilation, condensation from steam vapors tend to accumulate on the internal clutch mechanism when the vehicle is steam cleaned. The facings of the disc will absorb moisture, and the force exerted by the pressure plate will bond the facings to flywheel and/or, pressure plate, if car is allowed to stand for some time before use. If this condition occurs, it will necessitate replacement of disc assembly, flywheel and/or clutch assembly. **Immediately after cleaning operation, start engine and "slip clutch" in order to dry off disc assembly, pressure plate, and/or flywheel.**

SPECIFICATIONS

VALIANT, BARRACUDA, SATELLITE, FURY

PLYMOUTH CLUTCH APPLICATION CHART

Size	Trans. Speeds	Cover & Press. Plate Assy. No.	Disc Assy. No.	Engine Cu. In.	Car Model*
9-1/4"	3	1	1	170-225	VBRP
9-1/2"	3	2	2	170-225 Opt.	VB
10"	3 or 4	3	3	273	V
10-1/2"	3 or 4	4	4	318	VBRP
10-1/2"	4	5	4	340-383	B
11"	3	6	5	225	RP
11"	3 or 4	7	6	383	RP
11"	4	8	7	426	R
11"	4	9	7	440	RP

*V=Valiant B=Barracuda R=Satellite P=Fury

COVER AND PRESSURE PLATE ASSY. IDENTIFICATION CHART

Size	Assy. No.	Part Number*	Springs No. & Color	Mounting Bolt Circle Dia.	Centrifugal Assist Roller
9-1/4"	1	2409692	3 Red Stripe	10-5/8"	0
9-1/2"	2	2800827	3 White	10-5/8"	0
10"	3	2409699	6 Black—3 Lavender	11-5/8"	0
10-1/2"	4	2122255	3 White—6 Plain	11-5/8"	6
10-1/2"	5	2409688	6 White—6 Tan	11-5/8"	6
11"	6	2409682	3 White—6 Plain	12-5/8"	0
11"	7	2800860	6 White—6 Tan	12-5/8"	6
11"	8	2768160	9 White—3 Plain	12-5/8"	3
11"	9	2800857	9 White—3 Plain	12-5/8"	6

*Part Numbers subject to change during model year.

CLUTCH DISC ASSY. IDENTIFICATION CHART

Size	Assy. No.	Part Number*	Facing Dia. Outside x Inside	Springs No. & Color	Spline Inside Dia.
9-1/4"	1	2401102	9-1/4" x 6"	6 Enclosed	15/16"
9-1/2"	2	2401120	9-1/2" x 6-1/2"	6 Enclosed	15/16"
10"	3	2200051	10" x 6-3/4"	5 Black—5 Red	15/16"
10-1/2"	4	2266232	10-1/2" x 6-1/2"	5 Green—5 Tan	15/16"
11"	5	2409683	11" x 6-1/2"	6 Blue	15/16"
11"	6	2800861	11" x 6-1/2"	5 Green—5 Tan	15/16"
11"	7	2768162	11" x 7"	5 Plain	1—1/16"

*Part Numbers subject to change during model year.

TIGHTENING REFERENCE

	POUNDS FOOT	POUNDS INCH
Clutch Cover to Flywheel Bolts (5/16")		200
Clutch Cover to Flywheel Bolts (3/8")	30	
Clutch Fork Pivot Bolts		200
Clutch Housing to Engine Bolts (3/8")	30	
Clutch Housing to Engine Bolts (7/16")	50	
Clutch Housing Pan Bolts		200
Flywheel Screws (All except 426 Hemi)	55	
Flywheel Screws (426 Hemi)	70	
Torque Shaft Ball Stud	40	
Torque Shaft Ball Stud Nut	40	
Torque Shaft Ball Stud Bracket Screws (Valiant 6 and 8-Cylinder and Barracuda 6-Cylinder)		200
Torque Shaft Ball Stud Bracket Screw (Barracuda 383 Eng.)	40	
Transmission to Clutch Housing Bolts	50	

COOLING

CONTENTS

	Page		Page
ACCESSORY BELT DRIVES	8	RADIATOR PRESSURE CAP	7
CONVERSION TABLE	13	REVERSE FLUSHING COOLING SYSTEM	6
ENGINE WATER TEMPERATURE GAUGE	8	SERVICE DIAGNOSIS	1
FAN	3	SPECIFICATIONS	10
FLUID FAN DRIVE	3	TIGHTENING REFERENCE	13
PRESSURE TESTING COOLING SYSTEM	7	THERMOSTAT	6
PRESSURE TESTING RADIATOR CAP	7	TRANSMISSION OIL COOLER	5
RADIATOR	4	WATER PUMP	4
RADIATOR HOSES	7		

GENERAL INFORMATION

In order to provide satisfactory protection for the wide variety of corporation models the cooling system of each must be tailored to specific needs. To do this effectively the Corporation offers five basic systems:

(1) Standard
(2) Air Conditioning
(3) High Capacity Fan
(4) Maximum Cooling
(5) Trailer Towing

The standard system consists of a tube and spacer type radiator, 16 psi radiator pressure cap, centrifugal water pump, 190°F. thermostat,* and a four or seven blade fan. See specifications for application.

The cooling system for air conditioned equipped vehicles generally requires a greater capacity radiator along with a fan shroud, special centrifugal water pump, larger fan, and thermostatically controlled fan drive (in some installations). See specifications for applications.

The optional high capacity fan to protect against overheating for unusual operating conditions.

The maximum cooling system consisting of a larger radiator and on some models radiator shrouds and/or hood-to-yoke seals are used to provide protection against overheating for unusually severe operation requirements.

The trailer towing package is a combination of the maximum cooling package and the high capacity fan, as necessary to provide protection against overheating when towing trailers.

For internal cooling system protection each cooling system is factory equipped with sufficient permanent type anti-freeze for —20°F. protection. It is recommended that the coolant be changed annually to insure adequate anti-freeze and corrosion protection. In areas where anti-freeze is not required, Chrysler rust resistor or equivalent must be added to the water coolant for normal corrosion protection. Air conditioned cars require year round protection with permanent type anti-freeze with a minimum of +15°F. protection for summer operation and additional anti-freeze in the winter according to the prevailing temperatures.

*170 Cubic Inch Engine has a 200° thermostat.

SERVICE DIAGNOSIS

Condition	Possible Cause	Correction
EXTERNAL LEAKAGE	(a) Loose hose clamp.	(a) Replace the hose clamp.
	(b) Hose leaking.	(b) Replace the hose.
	(c) Leaking radiator.	(c) Repair or replace the radiator as necessary.
	(d) Water pump leaking through vent hole.	(d) Replace the water pump.
	(e) Loose core hole plug.	(e) Install new core hole plug.
	(f) Damaged gasket, or dry gasket, if engine has been stored.	(f) Replace gaskets as necessary.
	(g) Cylinder head bolts loose, or tightened unevenly.	(g) Replace the cylinder head gasket and torque head in correct sequence.
	(h) Leak in heater connection.	(h) Clean the heater connections and replace the hoses and clamps if necessary.
	(i) Leak at water temperature sending unit.	(i) Tighten the water temperature sending unit.

Condition	Possible Cause	Correction
	(j) Leak at water pump attaching bolt.	(j) Tighten the water pump attaching bolts to 30 foot-pounds.
	(k) Leak at exhaust manifold stud.	(k) Seal and re-drive the stud.
	(l) Cracked thermostat housing.	(l) Replace the thermostat housing.
	(m) Dented radiator inlet or outlet tube.	(m) Straighten the radiator inlet or outlet tube as necessary.
	(n) Leaking heater core.	(n) Repair or replace the heater core.
	(o) Cracked or porous water pump housing.	(o) Replace the water pump assembly.
	(p) Warped or cracked cylinder head.	(p) Replace the cylinder head.
	(q) Cracked cylinder block.	(q) Replace the cylinder block.
	(r) Sand holes or porous condition in block or head.	(r) Replace the cylinder block or cylinder head as necessary.
	(s) Faulty pressure cap.	(s) Replace pressure cap.
	(t) Loose or stripped cooler fittings.	(t) Tighten or replace as necessary.
INTERNAL LEAKAGE	(a) Faulty head gasket.	(a) Install a new head gasket.
	(b) Refer to causes (f), (g), (p), (q), (r) and (t) listed under External Leakage.	(b) Refer to corrections (f), (g), (p), (q), (r) and (t) listed under External Leakage.
	(c) Crack in head into valve compartment.	(c) Pressure test cooling system, replace the cylinder head.
	(d) Cracked valve port.	(d) Pressure test cooling system, replace the cylinder head.
	(e) Crack in block into push rod compartment.	(e) Pressure test cooling system, replace the cylinder block.
	(f) Cracked cylinder wall.	(f) Pressure test cooling system, replace the cylinder block.
	(g) Leaking oil cooler.	(g) Repair or replace the oil cooler.
POOR CIRCULATION	(a) Low coolant level.	(a) Fill radiator to correct level.
	(b) Collapsed radiator hose. (A bottom hose with faulty spring may collapse only at medium or high engine speeds.	(b) Replace the hose and spring.
	(c) Fan belt loose, glazed, or oil soaked.	(c) Tighten or replace the fan belt as necessary.
	(d) Air leak through bottom hose.	(d) Reposition hose clamps or replace the hose. Check radiator outlets for dents or out-of-rounds.
	(e) Faulty thermostat.	(e) Replace the thermostat.
	(f) Water pump impeller broken or loose on shaft.	(f) Replace the water pump.
	(g) Restricted radiator core water passages.	(g) Flush the radiator thoroughly or rod out if necessary.
	(h) Restricted engine water jacket.	(h) Flush the engine cooling system thoroughly.
OVERHEATING (refer to Causes and Corrections listed under "Poor Circulation")	(a) Blocked radiator air passages.	(a) Clean out the radiator air passages.
	(b) Incorrect ignition timing.	(b) Time the engine ignition system.
	(c) Low engine oil level.	(c) Add engine oil to the correct level.
	(d) Incorrect valve timing.	(d) Correct the engine valve timing.
	(e) Inaccurate temperature gauge.	(e) Replace the temperature gauge.
	(f) Restricted overflow tube.	(f) Remove restriction from overflow tube.
	(g) Faulty radiator pressure cap or seat.	(g) Replace the radiator cap. Clean or replace seat.
	(h) Frozen heat control valve.	(h) Free up manifold heat control valve.
	(i) Dragging brakes.	(i) Adjust the brakes.
	(j) Excessive engine idling.	(j) Increase idle R.P.M. or stop engine.
	(k) Frozen coolant.	(k) Thaw out cooling system, add antifreeze as required.
	(l) Faulty fan drive unit.	(l) Replace the fan drive unit.
	(m) Faulty temperature sending unit.	(m) Replace the sending unit.
OVERFLOW LOSS (Also refer to Causes and Corrections listed under	(a) Overfilling.	(a) Adjust coolant to the correct level.
	(b) Coolant foaming due to insufficient corrosion inhibitor.	(b) Flush the radiator and add antifreeze or rust inhibitor as required.

Condition	Possible Cause	Correction
"Poor Circulation and Overheating")	(c) Blown head gasket. (d) Broken or shifted lower hose spring.	(c) Replace the head gasket. (d) Replace lower hose.
CORROSION	(a) Use of water containing large concentration of lime and minerals. (b) Insufficient corrosion inhibitor. (c) Use of antifreeze for extended length of time. (d) Failure to use corrosion inhibitor in summer.	(a) Use only clean soft water with inhibitor. (b) Use antifreeze or rust inhibitor as required. (c) Drain cooling system and replace with new antifreeze. (d) Flush radiator and refill with clean soft water and rust inhibitor.
TEMPERATURE TOO LOW—SLOW ENGINE WARM-UP	(a) Faulty thermostat. (b) Inaccurate temperature gauge. (c) Faulty temperature sending unit.	(a) Replace the thermostat. (b) Replace the temperature gauge. (c) Replace the sending unit.
WATER PUMP NOISY	(a) Seal noisy. (b) Bearing corroded.	(a) Add Water Pump Lube. (b) Replace water pump.

ACCESSORY DRIVE BELTS

INSUFFICIENT ACCESSORY OUTPUT DUE TO BELT SLIPPAGE	(a) Belt too loose. (b) Belt excessively glazed or worn.	(a) Adjust belt tension. (b) Replace and tighten as specified.
BELT SQUEAL WHEN ACCELERATING ENGINE	(a) Belts too loose. (b) Belts glazed.	(a) Adjust belt tension. (b) Replace belts.
BELT SQUEAK AT IDLE	(a) Belt too loose. (b) Dirt and paint imbedded in belt. (c) Non-uniform belt. (d) Non-uniform groove or eccentric pulley.	(a) Adjust belt tension. (b) Replace belt. (c) Replace belt. (d) Replace pulley.
BELT ROLLED OVER IN GROOVE OR JUMPS OFF	(a) Broken cord in belt. (b) Belts not matched (A/C). (c) Belt is not Chrysler approved part. (d) Belt too loose. (e) Severely misaligned pulleys.	(a) Replace belt. (b) Install matched belts. (c) Install Chrysler belt. (d) Adjust belt tension. (e) Align accessories.

SERVICE PROCEDURES

FAN

There are no repairs to be made to the fan. If the fan is bent or damaged it should be replaced.

Removal

(1) Remove lower radiator outlet notch cover screws and cover from fan shroud if equipped with 26 inch width radiator. See specifications for application.

(2) Remove shroud attaching screws, separate shroud from radator, position shroud rearward on engine. Fan attaching screws can now be removed.

(3) On models equipped with fluid fan drive, remove fan drive attaching screws. The fan and fluid fan drive are removed as a unit.

Installation

Use correct fan spacer, if required, so clearance between fan blades and radiator is 3/4 to 1-1/4 inches. No fan spacer permitted with fluid fan drive regardless of fan blades to radiator clearance. Install upper half of shroud or one piece shroud on vehicles so equipped. Tighten fan belt as outlined in "Belt Tension Specifications".

FLUID FAN DRIVE

CAUTION: To prevent silicone fluid from draining into fan drive bearing and ruining the grease, do not place drive unit with shaft pointing downward.

Torque Control Drive

The Torque Control Drive (Fig. 1) is a silicone fluid filled coupling connecting the fan to the fan pulley. The unit allows fan to be driven in normal manner at low engine speeds while limiting the top speed of fan to pre-determined level at higher engine speeds.

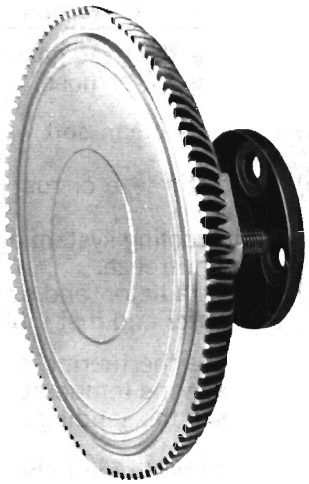

NK480A

Fig. 1—Torque Control Fan Drive

Thermal Control Drive

Air conditioned vehicles only, the Thermal Control Drive (Figs. 2 and 3) is essentially the same as the Torque unit except for a thermostat spring on the drive face. This thermostat senses temperature from the radiator and engages the drive for higher fan speed if temperature from the radiator rises above a certain point.

In case of engine overheating during slow car speed or idle operation, increase engine speed to approximately 1000 rpm in neutral gear. If condition is not corrected by increasing engine speed, replace fan drive unit with a unit known to be operating properly and test by operating vehicle under same conditions. Replace original drive unit assembly if trouble was corrected with test unit.

WATER PUMP

Note: The water pump is serviced only as an assembly. When replacing the water pump do not install a standard water pump on any air conditioned vehicle or vice versa. See specifications for proper pump.

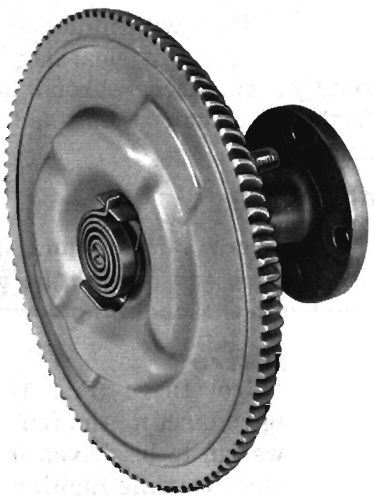

NP541

Fig. 2—Thermal Control Fan Drive (318 Cubic Inch Engine with 2.76:1 Axle Ratio)

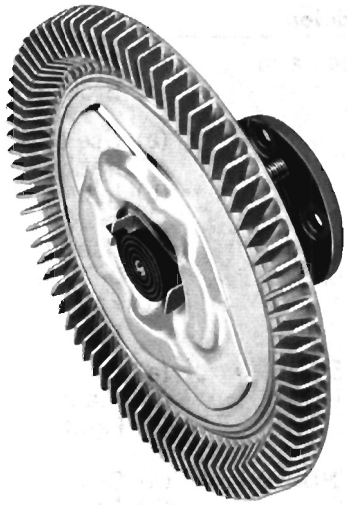

NK479A

Fig. 3—Thermal Control Fan Drive (318-340-383-440 Cubic Inch Engine with 2.93:1 or Higher Axle Ratio)

Removal

(1) Drain the cooling system. (Remove upper half of fan shroud if so equipped or set one piece shroud back on engine).

(2) Loosen power steering pump, idler pulley and alternator. Remove all belts.

(3) Remove fan, spacer (or fluid drive) and pulley. **CAUTION: To prevent silicone fluid from draining into fan drive bearing and ruining the grease, do not place drive unit with shaft pointing downward.**

(4) Remove the bolts attaching the water pump body to the housing. Remove the water pump and discard gasket.

Installation

(1) Install water pump body on housing, using a new gasket.

(2) Tighten bolts to 30 foot-pounds. Rotate pump by hand to be sure it rotates freely. Install pulley, spacer (or fluid drive) and fan.

(3) Tighten nuts to 15 foot-pounds. Install upper half of fan shroud or one piece shroud if so equipped. Fill the cooling system and test for leaks. Tighten belts as outlined in "Belt Tension Specifications".

RADIATOR

Removal

(1) Drain cooling system.

(2) On vehicles with automatic transmission, disconnect oil cooler lines at radiator bottom tank.

(3) Remove lower radiator outlet notch cover screws and cover from fan shroud if equipped with 26 inch width radiator. See specifications for application.

(4) Remove upper and lower radiator hoses (using pliers C-3250).

(5) Remove shroud attaching screws, separate shroud from radiator, position shroud rearward on engine for maximum clearance.

(6) Remove radiator attaching screws.

(7) Radiator can now be lifted free from engine compartment. **Care should be taken not to damage radiator cooling fins or water tubes during removal. Fan damage should always be avoided.**

Installation

(1) Slide radiator down into position behind radiator support and install attaching screws.

(2) Install fan shroud (if so equipped), connect hoses, and connect transmission oil cooler lines, if so equipped.

(3) Fill cooling system to 1-1/4″ below filler neck seat with water and rust resistor or water and anti-freeze, as required. After warm-up, re-check coolant level.

(4) On vehicles with automatic transmission, measure transmission oil level after warm-up and add oil as required.

Cleaning

(1) Drain cooling system and refill with clean **soft** water and a reliable cooling system cleaner.

(2) Operate engine according to directions on Cleaner label.

(3) After cleaning operation, flush entire cooling system until water runs clean.

(4) If vehicle is operated in areas where protection from freezing is not required, and vehicle is not equipped with **air conditioning,** refill cooling system with clean **soft** water and a high quality corrosion inhibitor, such as Chrysler Rust Resistor, Part Number 2421778.

(5) If vehicle is equipped with **air conditioning** the cooling system must contain anti-freeze all year round. This is necessary because in the reheat-cycle system used on all vehicles, except Valiant and Barracuda, cold refrigerated air passes through the heater core. Anti-freeze is necessary to prevent the heater core from freezing in hot weather when the air conditioner is being used.

TRANSMISSION OIL COOLER

The transmission oil cooler is located in the bottom radiator tank (water cooled), which is an integral part of the radiator.

Some models are equipped with an auxiliary oil cooler (air cooled) mounted ahead of the radiator and is connected in series with the standard transmission oil cooler (Fig. 4).

In case of a leak, engine coolant may become

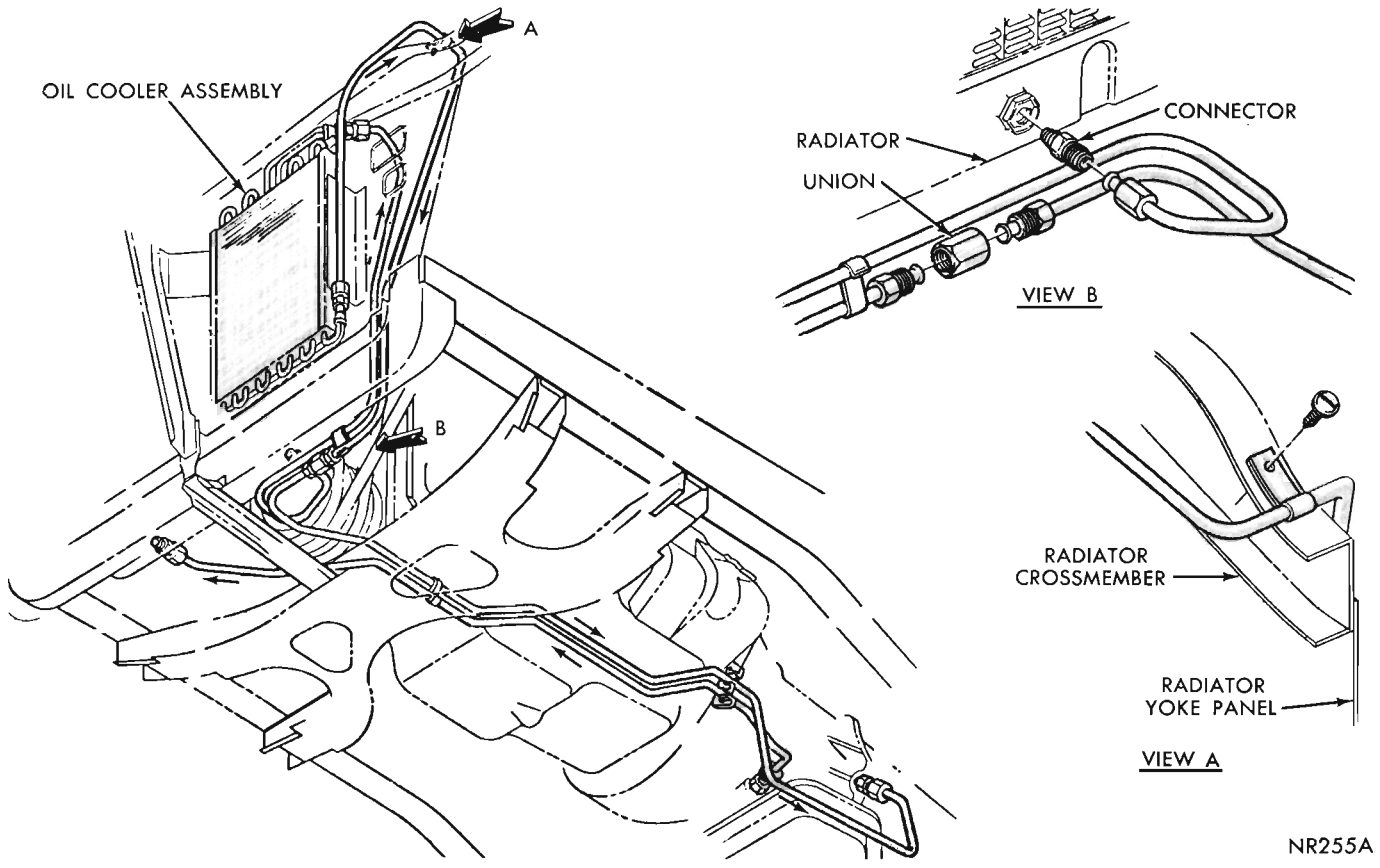

Fig. 4—Oil Flow—Transmission Coolers— Hemi Automatic

mixed with transmission fluid, also, transmission fluid may enter cooling system. Both cooling system and transmission should be inspected in event cooler is leaking.

Testing Oil Cooler for Leaks

(1) Disconnect both oil cooler lines at radiator.

(2) Connect a pressure gauge to one cooler connection and a shut off valve to the other. Close the valve.

(3) Connect a source of air pressure to the valve.

(4) Coat all fittings with oil.

(5) Open the test valve and apply (up to 100 psi) air pressure. Oil bubbles will identify any fitting joint leaks. Repair all joint leaks.

(6) Close the valve. Gauge reading will then drop if cooler is leaking.

Repairing Oil Cooler

The transmission auxiliary oil cooler being all aluminum can be repaired by a local reliable radiator service having the equipment for alumibrazing or heliarc.

(1) Remove radiator from vehicle.

(2) Remove radiator bottom tank.

(3) Melt the soft solder holding the cooler to the tank.

(4) Remove the stamped retainer nuts holding the cooler fittings to the bottom tank and remove the cooler.

(5) Install a new cooler or repair the old cooler with **silver solder** and reinstall as follows:

(6) Position oil cooler in bottom tank and install the stamped retainer nuts on oil cooler fittings.

(7) Use soft solder to secure the cooler in the tank.

(8) Attach bottom tank to radiator using soft solder.

(9) Install radiator as described in Paragraph "Radiator".

(10) Fill cooling system and test for leaks.

If the transmission operates properly after repairing the leak, drain the transmission and torque converter while hot, remove the transmission oil pan and inspect for sludge, rust, dirty or plugged inlet filter. If none of these conditions are found, reconditioning may not be necessary. Reassemble, using Dexron "Automatic Transmission Fluid or Chrysler Automatic Transmission Fluid AQ-ATF-2848A available under Part Number 1843314.

REVERSE FLUSHING THE COOLING SYSTEM

Reverse flushing of the cooling system is the forcing of water through the cooling system, using air pressure in a direction opposite to that of the normal flow of water.

Flushing Cylinder Block

(1) Drain radiator and remove hoses at radiator.

(2) Remove thermostat and reinstall thermostat housing.

(3) Install Tool C-3514, or other suitable flushing gun to inlet hose.

(4) Connect water hose of gun to a pressure water source and air hose of gun to a pressure air source.

(5) Turn on water, and when cylinder block is filled, turn on air (up to 20 psi) in short blasts.

(6) Allow cylinder block to fill between blasts of air.

(7) Continue this procedure until water runs clean. Test thermostat and if satisfactory, reinstall: otherwise, replace using a new housing gasket.

(8) Fill cooling system to 1-1/4 inches below filler neck, using **soft** water and rust resistor, anti-freeze, depending on season or if equipped with air conditioning.

(9) Engine should be operated until temperature gauge indicates normal operating temperature, then, continue an additional five minutes to release any air trapped in system.

(10) Check for leaks and coolant level; correct as necessary.

Reverse Flushing Radiator

(1) Drain cooling system and remove hoses from engine.

(2) Install Tool C-3514, or other suitable flushing gun in radiator lower outlet.

(3) Fill radiator and turn on air in short blasts.

CAUTION: Internal radiator pressure must not exceed 20 psi, as damage to radiator may result.

(4) Continue this procedure until water runs clean.

It is a good policy to reverse flush heater cores any time the radiator is reverse flushed.

(5) Fill cooling system to 1-1/4 inches below filler neck, using **soft** water and rust resistor, anti-freeze, depending on season or if equipped with air conditioning.

(6) Engine should be operated until temperature gauge indicates normal operating temperature, then, continue an additional five minutes to release any air trapped in system.

(7) Check for leaks and coolant level; correct as necessary.

THERMOSTAT

The thermostat is actuated by a pellet containing a copper-impregnated wax, as shown in (Fig. 5). As the temperature of the pellet increases, the wax expands and opens the valve. A 190° thermostat is standard equipment.* **The use of a 160° thermostat or alcohol type anti-freeze is not recommended.**

*170 Cubic Inch Engine has a 200° thermostat.

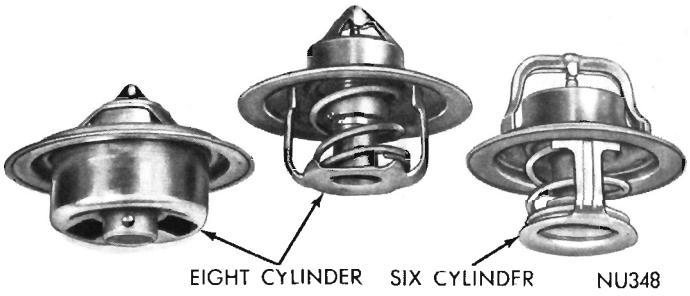

Fig. 5—Thermostats

If the thermostat does not close completely when cold, the engine will warm up slowly or not at all, and heater performance will also be impaired. Poor heater performance may also be due to valve opening at too low a temperature. Too high a valve opening temperature or a valve that will not open can cause overheating.

Removal

(1) Drain cooling system down to thermostat level or below.

(2) Remove upper radiator hose from thermostat housing.

(3) Remove thermostat housing bolts and remove thermostat and housing.

Testing Thermostat

(1) Visually inspect thermostat to make sure valve closes tightly. If valve does not close completely due to dirt, sand or other foreign material, carefully clean the sealing edge making sure the sealing edge is not damaged. If valve does not close tightly when clean, install a new thermostat.

(2) Immerse thermostat in a container of warm water so that pellet of thermostat is completely covered. The pellet must not touch bottom or sides of container.

(3) Heat the water and stir it continuously (to insure uniform temperature) and check water temperature with a thermometer at the point when a .001" feeler gauge can be inserted into valve opening. The feeler gauge should pass freely into the valve opening at a water temperature of 187° to 194°F for a 190° thermostat and a water temperature of 197° to 204° for a 200° thermostat. If outside of this range, replace thermostat.

(4) Continue heating water to approximately 210°F for a 190° thermostat and 220° temperature for a 200° thermostat. The thermostat valve should be fully open at this temperature. If it is not, replace thermostat.

Installation

(1) Using a new gasket, position thermostat so pellet end is toward engine and attach with bolts through thermostat housing.

(2) If removed, reinstall or replace the upper hose.

(3) Fill cooling system to 1-1/4 inches below filler neck with water and rust resistor or water and anti-freeze.

RADIATOR HOSES

The hoses are removed and installed using hose clamp pliers C-3250.

A hardened, cracked, swollen or restricted hose should be replaced.

The reinforcement spring inside the lower hose is necessary to prevent collapsing of the hose due to suction at medium or high engine speeds. If this spring is deformed, it should be replaced.

RADIATOR PRESSURE CAP

Radiators are equipped with a 16 psi cap, as standard equipment (Fig. 6).

WARNING: When removing pressure cap, turn counterclockwise to stop, permitting built-up pressure to escape through overflow tube. This will prevent hot water from spraying out of radiator filler opening.

PRESSURE TESTING RADIATOR CAP

Select the short neoprene seal and metal adapter from the kit, Tool C-3499. Slip the seal on the tube at the bottom of the instrument. Then attach either end of the short adapter to the instrument. Dip the pressure cap in water and apply cap to end of adapter. Working the plunger, as shown in (Fig. 7) bring the pressure to 16 pounds on the gauge. If the pressure cap fails to hold the pressure within a range of 14-17 pounds, replace the cap with a **new tested** cap.

The brass vent valve at the bottom of the cap should hang freely. If the rubber gasket has swollen and prevents the valve from hanging loosely, replace the cap. **Do not use a replacement cap without this vent valve.**

PRESSURE TESTING COOLING SYSTEM

(1) With engine not running, wipe the radiator filler neck sealing seat clean. The water level should be 1/2 inch below neck of radiator.

(2) Attach the Tester Tool C-3499 to the radiator,

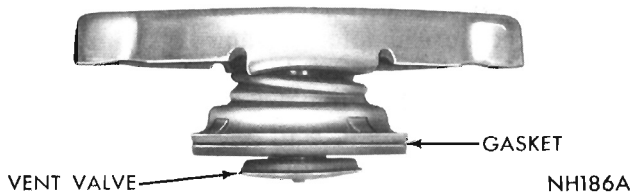

Fig. 6—Radiator Pressure Cap

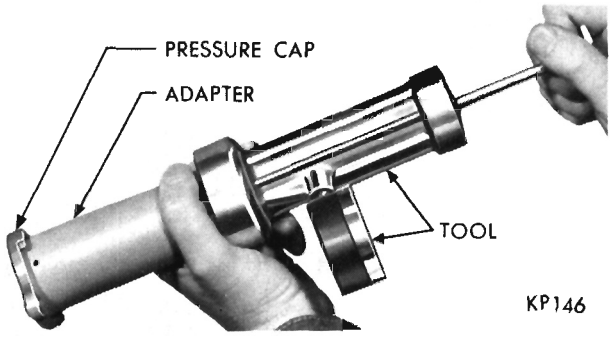

Fig. 7—Testing Pressure Cap

as shown in (Fig. 8) and apply 15 pounds pressure. If the pressure drops inspect all points for external leaks.

(3) If there are no external leaks, after the gauge dial shows a drop in pressure, detach the tester, start engine and run the engine to operating temperature in order to open the thermostat and allow the coolant to expand. Reattach the tester and pump to 7 lbs. pressure while the engine is running. Race the engine, and if the needle on the dial fluctuates it indicates a combustion leak, usually a head gasket.

WARNING: Pressure builds up fast. Any excessive amount of pressure built up by continuous engine operation must be released to a safe pressure point. NEVER PERMIT PRESSURE TO EXCEED 20 lbs.

(4) Remove the wires from the spark plugs on one bank and operate the engine on the opposite bank. If the needle continues to fluctuate, it indicates a leak on the bank still in operation. If the needle ceases to fluctuate, the leak is in the bank, from which combustion has been released.

(5) If the needle on the dial does not fluctuate, race the engine a few times and if an abnormal

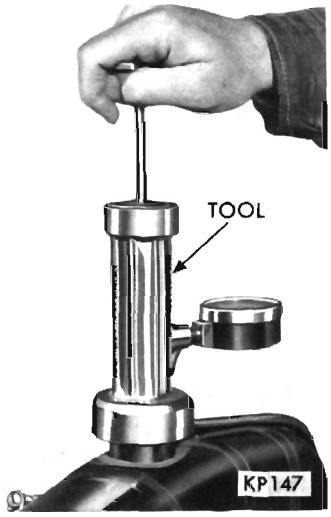

Fig. 8—Pressure Testing Cooling System

amount of water emits from the exhaust system at the tail pipe, it may indicate a leak that can be a faulty head gasket, cracked engine block, or the cylinder head near the exhaust ports.

(6) If the above pressure test of the cooling system holds without fluctuation, then there is no leak, however, there may be internal leaks which can be determined by removing the oil dip-stick and if water globules appear intermixed with the oil it will indicate a serious internal leak in the engine. If there is an internal leak, the engine must be disassembled, the leak located and necessary new parts installed.

ENGINE WATER TEMPERATURE GAUGE

For Removal, Installation and Testing procedures of the water temperature sending and receiving units, refer to "Electrical" Group 8 "Gauges".

ACCESSORY BELT DRIVES

PROPER BELT TENSION

Satisfactory performance of belt driven accessories (Fig. 9) depends on the maintenance of proper belt tension. There are two methods by which belt tensions can be properly established. "The Torque Method" and "The Belt Deflection Method". If the specified tensions are not maintained, belt slippage may cause engine overheating, lack of power steering assist, loss in air conditioning capacity, reduced belt life. To avoid any such adverse effects, the following service procedure should be followed: Adjust all belts to the specified "used belt" tension at new vehicle preparation. Any belt that has operated for a minimum for a half-hour is considered to be used. The new belt tension specification apply for all new belt replacements.

On **Fury Models** with 383 or 440 cubic inch engine with air conditioning, it may be necessary to remove the A/C clutch to install a new A/C belt set. With belts engaged in the crankshaft, alternator and the A/C clutch grooves, install A/C clutch on compressor. Adjust belts to proper tension. See Group 24 of this manual for A/C clutch Removal and Installation.

Torque Method

All belts can be adjusted to the specified tension by use of a torque wrench. The alternator belts are adjusted by using a special Tool C-3841 and torque wrench Tool C-3005.

The special tool should be hooked at the heavily-ribbed section of the alternator rectifier end shield. Other belts can also be tightened by torque wrench if the adjusting bracket has a square hole. To tighten belts by the torque method, loosen all mounting bolts and apply the specified torque to the accessory or

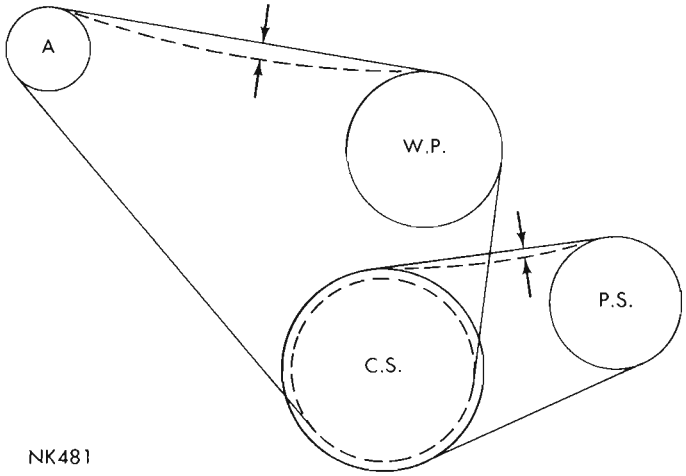

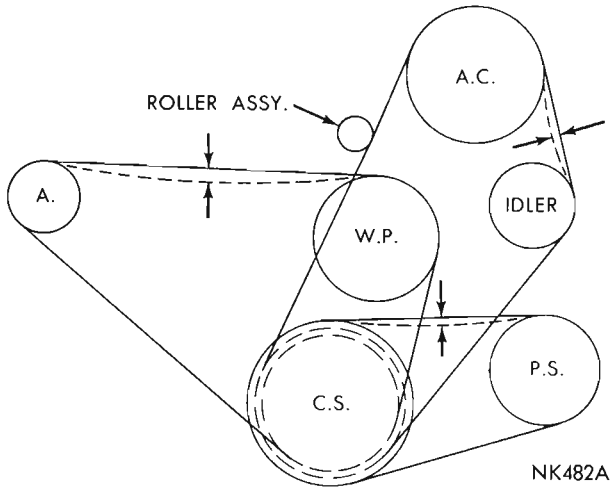

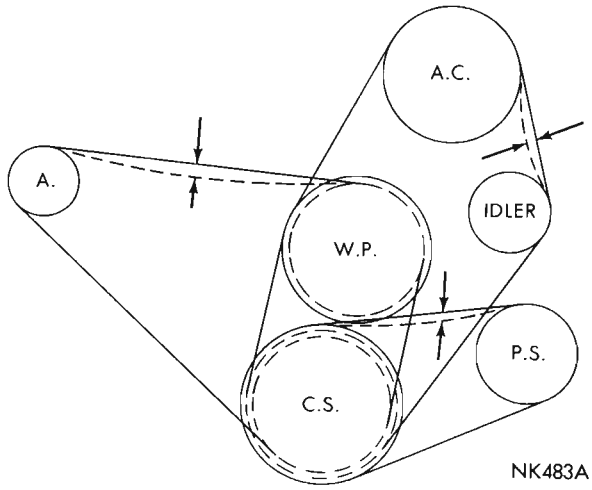

Fig. 9—Belt Deflection Location

idler. (See Specifications.) Tighten all mounting bolts while the torque is applied to the accessory. If it is not possible to use the torque wrench because of clearance, use an extension.

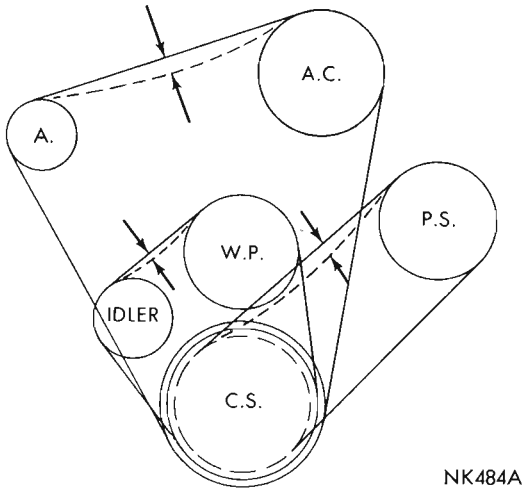

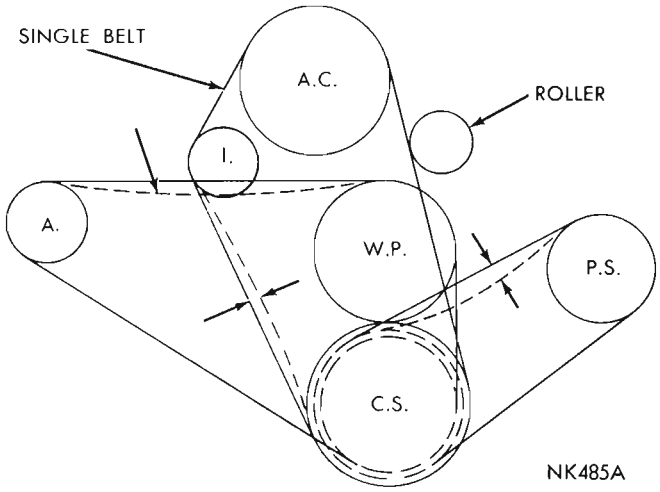

Belt Deflection Method

All belts can also be adjusted by measuring the deflection of the belt at the mid-point between two pulleys under a five-pound push or pull. A small spring scale can be used to establish the five-pound load. See Figure 9 for correct location at which to measure deflection.

This method should be used only when it is not possible to use the torque method. To adjust belts by the deflection method, loosen all mounting bolts and use a bar to apply tensions to the belts being careful not to damage the accessory. A 1/2 inch square drive hinge handle can be used if the accessory has a square hole. Tighten the mounting bolts and test the deflection. (See Specifications.) It may be necessary to repeat this procedure several times to establish the correct tension.

SPECIFICATIONS

VALIANT AND BARRACUDA

ENGINE SIZE	170	225	273	318	340	383
CAPACITY Quarts (With Heater) Radiator Width	12-19″ 14-22″	13-19″ 15-22″	17-19″ 19-22″	16-19″ 18-22″	16-22″	16-22″
RADIATOR—Identification Number—Width						
Transmission—Manual—3 Speed	2949074-19″	2949074-19″	2949071-19″	2949071-19″	N/A	N/A
—4 Speed	N/A	N/A	N/A	N/A	2949066-22″	2949065-22″
—Automatic	2949076-19″	2949073-19″	2949031-19″	2949031-19″	2949066-22″	2949065-22″
—Air Conditioning	N/A	2949072-22″	2949069-22″	2949067-22″	2949068-22″	N/A
Maximum Cooling	2949075-22″	2949075-22″	2949068-22″	2949068-22″	2949068-22″	N/A
Oil Cooler Size	6″	6″	10″	10″	10″	10″
Maximum Cooling	6″	6″	12″	12″	12″	N/A
Shroud—Transmission—Manual	None	None	None	None	Yes	Yes
—Automatic	None	None	None	None	Yes	Yes
—A/C	N/A	Yes	Yes	Yes	Yes	N/A
—Max. Cooling	None	Yes	Yes	Yes	Yes	N/A
FAN						
Diameter—Number Blades—Width						
Standard	16–4–1-1/2	17–4–1-1/2	18–4–2	18–7–2	18–7–2-1/4	18–7–1-1/2
Automatic	16–4–1-1/2	17–4–1-1/2	18–4–2	18–7–2	18–7–2-1/4	18–7–1-1/2
A/C	N/A	17–7–1-1/2	18–7–2-1/4	18–7–2-1/4	18–7–2-1/4	N/A
High Capacity	17–7–1-1/2	17–7–1-1/2	18–7–2-1/4	18–7–2-1/4	N/A	N/A
Spacer						
Standard	1.06″	1.06″	2.38″	2.38″	Torque	.70″
A/C	N/A	1.06″	2.00″	Thermal	Thermal	N/A
High Capacity	1.06″	1.06″	2.00″	2.00″	N/A	N/A
Ratio (Fan to Crankshaft)						
Standard	1.07:1	1.07:1	.95:1	.95:1	.95:1	.95:1
A/C	N/A	1.10:1	.95:1	1.3:1	1.3:1	N/A
High Capacity	1.07:1	1.07:1	.95:1	.95:1	N/A	N/A
HOOD TO YOKE SEAL						
Manual	None	None	None	Yes	Yes	Yes
Automatic	None	None	None	Yes	Yes	Yes
A/C	N/A	Yes	Yes	Yes	Yes	N/A
Max. Cooling	None	Yes	Yes	Yes	Yes	N/A
WATER PUMP IMPELLER						
Diameter—Number Blades						
Standard	3.50″-6	3.50″-6	4.38″-8	4.38″-8	4.38″-8	4.38″-8
A/C	N/A	3.50″-6	3.50″-6	3.50″-6	3.50″-6	N/A

N/A—Not Available.

BELVEDERE AND SATELLITE

ENGINE SIZE	225 Except Police-Taxi	225 Police Taxi	318 Except Police-Taxi	318 Taxi Only	318 Police Only	383-2BBL Except Police	383-4BBL Except Police	383-2 or 4 BBL Police	440 HP (A-134)	426 Hemi (A-102)
CAPACITY Qts. (W/Heater) Radiator Width..	13–19″ 15–22″	13–19″ 15–22″	16–19″ 19–26″	19–26″	19–26″	16–22″ 17–26″	16–22″ 17–26″	17–26″	17-22″ 18-26″	18-26″
RADIATOR—Identification Number—Width										
Transmission Manual A903	2949064–19″	N/A	N/A	N/A	N/A	N/A	N/A	N/A	N/A	N/A
A745	N/A	2949064–19″	2949061–19″	2949059–26″	2949059–26″	N/A	N/A	N/A	N/A	N/A
4 Speed A833	N/A	N/A	N/A	N/A	N/A	2949053–22″	2949053–22″	N/A	2949055-26″	2949054-26″
Automatic A904	2949063–19″	N/A	2949060–19″	N/A	N/A	N/A	N/A	N/A	N/A	N/A
A727	N/A	2949062–22″	N/A	2949059–26″	2949059–26″	2949053–22″	2949053–22″	2949052–26″	2949053-22″	2949054-26″
A/C	2949062–22″	2949062–22″	2949059–26″	2949059–26″	2949058–26″	2949055–26″	2949055–26″	2949054–26″	2949055-26″	N/A
Max. Cooling	2949062–22″	2949062–22″	2949058–26″	2949058–26″	2949058–26″	2949054–26″	2949054–26″	2949054–26″	2949054-26″	N/A
Oil Cooler Size Standard	10″		10″	10″	10″	12″	12″	15″	12″	Auxiliary Cooler +15″*
A/C	12″	12″	10″	10″	15″	12″	12″	15″	12″	N/A
Max. Cooling	12″	12″	15″	15″	15″	15″	15″	15″	15″	N/A
Shroud—Transmission Manual	None	None	None	Yes	Yes	None	None	N/A	Yes	Yes
Automatic	None	None	None	Yes	Yes	None	None	Yes	Yes	Yes
A/C	Yes	Yes	Yes	Yes	Yes	Yes	Yes	Yes	Yes	N/A
Max. Cooling	None	None	Yes	Yes	Yes	Yes	Yes	Yes	Yes	N/A
FAN										
Diameter—Number Blades—Width										
Standard	17–4–1-1/2	18–4–2	18–4–2	18–4–2	18–4–2	18–7–2	18–7–2		18–7–2-1/4	18–7–2-1/4
Automatic	17–4–1-1/2	18–4–2	18–4–2	18–4–2	18–4–2	18–7–2	18–7–2	18–7–2-1/8	18–7–2	18–7–2-1/4
A/C	18–4–2	18–4–2	18–7–2-1/4	18–7–2-1/4	18–7–2-1/4	18-1/2–7–2-1/2	18-1/2–7–2-1/2	18-1/2–7–2-1/2	18-1/2–7–2-1/2	N/A
High Capacity	18–7–1-1/2	18–7–1-1/2	18–7–2-1/4	18–7–2-1/4	18–7–2-1/4	18–7–2-1/8	18–7–2-1/8		18–7–2-1/8	N/A
Spacer									Manual-Torque	
Standard	1.24″	1.24″	2.38″	2.38″	2.38″	1.24″	1.24″	1.24″	Auto. 1.24″	Torque
A/C	1.24″	1.24″	Thermal	Thermal	Thermal	Thermal	Thermal	Thermal	Thermal	N/A
High Capacity	1.24″	1.24″	2.38″	2.38″	2.38″	1.24″	1.24″		1.24″	N/A
Ratio (Fan to Crankshaft)										
Standard	1.07:1	1.07:1	.95:1	.95:1	.95:1	.95:1	.95:1	.95:1	.95:1	1.20:1
A/C	1.07:1	1.07:1	1.30:1	1.30:1	1.30:1	1.40:1	1.40:1	1.40:1	1.40:1	N/A
High Capacity	1.07:1	1.07:1	.95:1	.95:1	.95:1	.95:1	.95:1		.95:1	N/A
HOOD TO YOKE SEAL										
Manual	None	Yes	Yes	Yes	Yes	Yes	Yes		Yes	Yes
Automatic	None	Yes	Yes	Yes	Yes	Yes	Yes	Yes	Yes	Yes
A/C	Yes	Yes	Yes	Yes	Yes	Yes	Yes		Yes	N/A
Max. Cooling	None	Yes	Yes	Yes	Yes	Yes	Yes	Yes	Yes	N/A
WATER PUMP IMPELLER										
Diameter—Number Blades										
Standard	3.50″–6	3.50″–6	4.38″–8	4.38″–8	4.38″–8	4.38″–8	4.38″–8	4.38″–8	4.38″-8	3.50″-6
A/C	3.50″–6	3.50″–6	3.50″–6	3.50″–6	3.50″–6	3.50″–6	3.50″–6	3.50″–6	3.50″–6	N/A

*Auxiliary cooler in series with standard oil cooler

N/A—Not available

FURY AND SPORT FURY

ENGINE SIZE	225 Except Police-Taxi	225 Police Taxi	318 Except Police-Taxi	318 Except Police-Taxi A904 Trans. Only	318 Police Taxi	383-2BBL Except Police	383-4BBL Except Police	383-2 or 4BBL 440 Police	440	440HP (A-134)
CAPACITY Qts. (W/Heater) Radiator Width..	13–19″	13-19″ 15-22″	16-19″ 19-26″	18-22″ 19-26″	16-19″ 18-22″ 19-26″	16-22″ 17-26″	17-26″	16-22″ 17-26″	17-22″ 18-26″	17-22″ 18-26″
RADIATOR—Identification Number—Width										
Transmission Manual A903	2949050–19″	N/A	N/A	N/A	N/A	N/A	N/A	383-2BBL Only	N/A	N/A
A745	N/A	2949050-19″	2949047-19″	N/A	2949047-19″	2949041-22″	N/A	2949036-26″	N/A	N/A
4 Speed A833	N/A	N/A	N/A	N/A	N/A	N/A	2949041-22″	N/A	N/A	2949041-22″
Automatic A904	2949050–19″	N/A	N/A	2949044-22″	N/A	N/A	N/A	N/A	N/A	N/A
A727	N/A	2949049-22″	2949047-19″	N/A	2949044-22″	2949041-22″	2949035-22″	2949036-26″	2949035-22″	2949035-22″
A/C	N/A	2949049-22″	2949046-26″	2949043-26″	2949043-26″	2949040-26″	2949038-26″	2949037-26″	2949034-26″	2949034-26″
Max. Cooling	N/A	2949049-22″	2949045-26″	2949045-26″	2949045-26″	2949037-26″	2949037-26″	2949037-26″	2949037-26″	2949037-26″
Oil Cooler Size Standard	10″	12″	10″	12″	12″	10″	12″**	12″		12″
A/C	12″	12″	10″	12″	12″	10″	12″**	12″	12″	12″
Max. Cooling	12″	12″	12″	12″	12″	12″	12″**	12″	12″	12″
Shroud—Transmission Manual	None	None	None	None	Yes	None	None	Yes	None	Yes
Automatic	None	None	None	None	Yes	None	None	Yes	None	Yes
A/C	Yes	Yes	Yes	Yes	Yes	Yes	Yes	Yes	Yes	Yes
Max. Cooling	None	None	Yes	Yes	Yes	Yes	Yes	Yes	Yes	Yes
FAN										
Diameter—Number Blades—Width										
Standard	17–4–1-1/2	18–4–2	18–4–2		18–4–2	18–7–2	18–7–2	18–7–2-1/8		18-1/2–7–2-1/2
Automatic	18–7–2-1/4	18–4–2	18–4–2	18–4–2	18–4–2	18–7–2	18–7–2	18–7–2-1/8	18–7–2	18–7–2
A/C	18–4–2	18–7–1-1/2	18-1/2–7–2-1/2	18-1/2–7–2-1/2	18-1/2–7–2-1/2	18-1/2–7–2-1/2	18-1/2–7–2-1/2	18-1/2–7–2-1/2	18-1/2–7–2-1/2	18-1/2–7–2-1/2
High Capacity	18–7–1-1/2	18–7–1-1/2	18–7–2-1/4	18–7–2-1/4	18–7–2-1/4	18–7–2-1/8	18–7–2-1/8		18–7–2-1/8	18–7–2-1/8
Spacer										Manual-Torque
Standard	1.72″	1.72″	2.20″	2.20″	2.20″	1.60″	1.60″	1.60″	1.60″	Auto.—1.60″
A/C	1.72″	1.72″	Thermal	Thermal	Thermal	Thermal	Thermal	Thermal	Thermal	Thermal
High Capacity	1.72″	1.72″	2.20″	2.20″	2.20″	1.60″	1.60″		1.60″	1.60″
Ratio (Fan to Crankshaft)										
Standard	1.07:1	1.07:1	.95:1	.95:1	.95:1	.95:1	.95:1	.95:1	.95:1	.95:1
A/C	1.07:1	1.07:1	1.30:1	1.30:1	1.30:1	1.40:1	1.40:1	1.40:1	1.40:1	1.40:1
High Capacity	1.07:1	1.07:1	.95:1	.95:1	.95:1	.95:1	.95:1		.95:1	.95:1
HOOD TO YOKE SEAL										
Manual	None	Yes	None		Yes	Yes	Yes	Yes		Yes
Automatic	None	Yes	None	Yes	Yes	Yes	Yes	Yes	Yes	Yes
A/C	Yes	Yes	Yes	Yes	Yes	Yes	Yes	Yes	Yes	Yes
Max. Cooling	None	Yes	Yes	Yes	Yes	Yes	Yes	Yes	Yes	Yes
WATER PUMP IMPELLER										
Diameter—Number Blades										
Standard	3.50″–6	3.50″-6	4.38″-8	4.38″-8	4.38″-8	4.38″-8	4.38″-8	4.38″-8	4.38″-8	4.38″-8
A/C	3.50″–6	3.50″-6	3.50″-6	3.50″-6	3.50″-6	3.50″-6	3.50″-6	3.50″-6	3.50″-6	3.50″-6

**With trailer tow, auxiliary cooler in series with standard oil cooler.

N/A—Not available

BELT TENSION SPECIFICATIONS

TORQUE METHOD

TORQUE (FT.-LBS.) TO BE APPLIED TO COMPONENTS

Engine Displacement	Used Belt†					New Belt				
Cubic Inches	170	225	273	318 340	383 426 Hemi 440	170	225	273	318 340	383 426 Hemi 440
POWER STEERING BRACKET	45	45	50	50	70	80	80	85	85	120
ALTERNATOR										
With A/C	15	15	40	40	45	20	20	55	55	70
Without A/C	15	15	40	40	40	20	20	55	55	60
A/C IDLER BRACKET	25	25	45	45	—	35	35	65	65	—
FAN IDLER					40					65

DEFLECTION METHOD

Deflection (Inches to be applied at midpoint of belt segment under 5 lb. load—(See Figure 9)

Engine Displacement	Used Belt†					New Belt				
Cubic Inches	170	225	273	318 340	383 426 Hemi 440	170	225	273	318 340	383 426 Hemi 440
POWER STEERING	5/32″	5/32″	5/32″	5/32″	5/32″	3/32″	3/32″	3/32″	3/32″	3/32″
FAN BELT IDLER	—	—	—	—	3/32″	—	—	—	—	1/16″
A-C IDLER (Clutch to Idler)	1/8″	1/8″	3/16″	3/16″	—	3/32″	3/32″	1/8″	1/8″	—
ALTERNATOR										
Without A/C	9/32″	9/32″	3/16″	3/16″	3/16″	3/16″	3/16″	1/8″	1/8″	3/32″
With A/C	—	9/32″	3/16″	3/16″	9/32″	3/16″	3/16″	1/8″	1/8″	3/16″

† Any Belt that has operated for a minimum of a half-hour is considered to be used.

CONVERSION CHART

U.S. Quart	12	13	14	15	16	17	18	19
Imperial Quart	10	10-3/4	11-3/4	12-1/2	13-1/4	14-1/4	15	15-3/4

TIGHTENING REFERENCE

	Inch Pounds	Foot Pounds	Thread Size
Water Pump Bolts	—	30	—
Fan Attaching Bolts	—	15-18	—
Thermostat Housing Bolts	—	30	—
Shroud Mounting Bolts	12	—	8-32
	75	—	1/4-20
Radiator Mounting Bolts	95	—	1/4-20
Drain Cock	150	—	—
Oil Cooler Fittings—To Radiator	110	—	—
Lines to Fittings	85	—	—
Lines to Auxiliary Cooler	85	—	—
Lines to Connector	50	—	—

ELECTRICAL

CONTENTS

	Page		Page
ALTERNATOR AND VOLTAGE REGULATOR	23	IGNITION SYSTEM	38
BATTERY	1	INSTRUMENT PANELS	70
ELECTRIC SEAT ADJUSTER	95	SPECIFICATIONS	99
ELECTRIC WINDOW LIFT	93	STARTING MOTORS	5
EXTERIOR LIGHTING	57	TAIL GATE WINDOW LIFT	94
EMERGENCY FLASHER	67	TOP LIFT (CONVERTIBLE TOP)	95
HEADLIGHTS	57	WINDSHIELD WIPER SYSTEM	82
TURN SIGNALS	65	WINDSHIELD WASHERS	91
HORNS	67	WIRING DIAGRAMS	110

BATTERY

INDEX

	Page		Page
Adjustment of Acid Gravity	3	High Rate Discharge Test of Battery Capacity	4
Battery Visual Inspection	1	Specifications	99
Charging the Battery	4	Specific Gravity Test	1

SERVICE PROCEDURES

BATTERY VISUAL INSPECTION

(1) Protect paint finish with fender covers.

(2) Disconnect battery cables at battery.

(3) Remove battery hold-down clamp and remove battery from vehicle.

(4) Inspect battery carrier and fender side panel for damage caused by loss of acid from battery.

(5) Clean top of battery with a solution of clean warm water and baking soda. Scrub areas with a stiff bristle brush being careful not to scatter corrosion residue. Finally wipe off with a cloth moistened with ammonia or baking soda in water.

CAUTION: Keep cleaning solution out of battery cells to eliminate weakening the electrolyte.

(6) Replace damaged or frayed cables.

(7) Clean battery terminals and inside surfaces of clamp terminals with Cleaning Tool MX-75.

(8) Examine battery case and cover for cracks.

(9) Install battery.

(10) Tighten battery hold-down screw nuts to 3 foot-pounds. **Observe polarity of battery terminals to be sure the battery is not reversed.**

(11) Connect cable clamps to battery posts and tighten securely. Coat all connections with light mineral grease or petrolatum **after tightening.**

(12) If electrolyte level is low, fill to recommended level with mineral-free water.

SPECIFIC GRAVITY TEST

A hydrometer Tool 40-B is used to measure specfic gravity of electrolyte in battery cells. This gives an indication of how much unused sulphuric acid remains in the solution.

A hydrometer should be graduated to read from 1.160 to 1.320, in graduations of .005 specific gravity. Graduated markings should be not less than 1/16 inch apart and accurate to within .002 specific gravity. Graduated portion of stem should be about two inches long. Clearance between float and glass barrel, at smallest diameter, should be a minimum of 1/8" around all sides and barrel must be clean.

Liquid level of battery cell should be at normal height and electrolyte should be thoroughly mixed with any battery water which may have just been added by charging battery before taking hydrometer readings. See "Adjustment of Acid Gravity."

In reading a hydrometer, the gauge barrel must be held vertically and just right amount of fluid be drawn up into gauge barrel with pressure bulb fully expanded to lift float freely so it does not touch the sides, top or bottom of the barrel. Take a reading with eye on level with liquid level in the gauge barrel. **DO NOT TILT** hydrometer.

Hydrometer floats are calibrated to indicate correctly only at one fixed temperature.

Specific gravity of battery electrolyte strength or density varies not only with the quantity of the acid in solution but also with temperature. As temperature increases, the density of the electrolyte decreases, and specific gravity is reduced. As temperature drops, the density of the electrolyte increases and the specific gravity increases.

Specific gravity variations caused by temperatures

must be considered and corrected to 80°F. in the analysis of the battery, otherwise specific gravity readings will not give a true indication of state of charge.

Use a battery immersion type thermometer of the mercury-in-glass type, having a scale reading as high as 125° F. and designed for not over a 1-inch bulb immersion. A suitable dairy type thermometer may prove satisfactory for the purpose.

Draw electrolyte in and out of the hydrometer barrel several times to bring the temperature of the hydrometer float to that of the acid in the cell and then measure the electrolyte temperature in the cell.

The temperature correction in specific gravity reading at 80° Fahrenheit is zero. Add .004 specific gravity points for every 10° degrees over 80° F. and subtract .004 specific gravity points for every 10 degrees under 80° F. All readings must be corrected at 80 degrees Fahrenheit. Refer to Figure 1 and examples one and two as follows:

Example 1—

Hydrometer Reading	1.260
Acid Temperature	20 degrees Fahrenheit
Subtract Specific Gravity	.024
Correct Specific Gravity is	1.236

Example 2—

Hydrometer Reading	1.255
Acid Temperature	100 degrees Fahrenheit
Add Specific Gravity	.008
Corrected Specific Gravity is	1.263

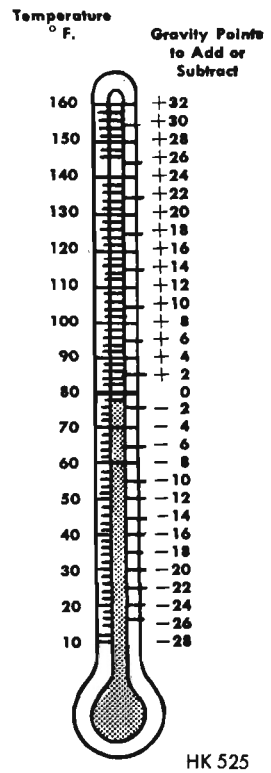

Fig. 1—Hydrometer Reading Correction Chart

A fully charged relatively new battery has a specific gravity reading of 1.260 plus .015 minus .005.

Test Conclusions

(a) Battery specfic gravity is less than 1.220 battery should be recharged. Make a high rate discharge test for capacity. If battery cells test O.K., recharge and adjust gravity of all cells uniformly. Test voltage regulator setting. Thoroughly test the electrical system for short circuits, loose connections and corroded terminals.

(b) **Cells show more than 25 points (.025 Specific Gravity) Variation**—Short circuit low cell. Loss of electrolyte by leakage or excessive overcharge; try to recharge battery. See "Charging the Battery." See "Adjustment of Acid Gravity".

(c) Battery specific gravity is above 1.220 and all cells are even. Battery state of charge may be satisfactory. Test by making "High Rate Discharge Test of Battery Capacity". Test voltage regulator setting and all electrical connections are clean and tight.

TEST BATTERY CONDITION AND STATE OF CHARGE WITH CAD-TIP ANALYZER—Part Number 1-369 (Fig. 2)

(1) Check electrolyte level in all cells and add mineral-free water to proper level. **When a car is running, the battery is receiving a charge from the alternator. This charge builds up a "surface charge" in the battery that must be removed before an accurate test can be made.**

(2) Remove the surface charge by turning the headlights "on" for one minute before testing battery. **If the battery has not been operating in a car for at least 8 hours prior to testing, Step 2 is not necessary. IMPORTANT: Be sure that headlights, ignition and all accessories are "off" during test.**

(3) Remove battery filler plugs and place the RED probe in the POSITIVE (+) CELL and the BLACK probe in the SECOND CELL. NOTE READING. (There will be no meter reading if the probes are

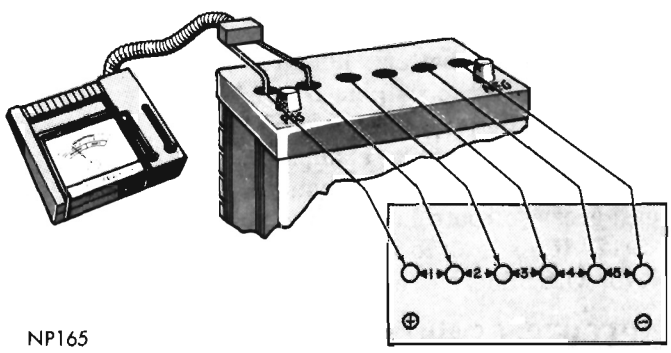

Fig. 2—Testing Battery Cells with Cad-Tip Battery Cell Analyzer

reversed.) **A manual set index pointer is provided to assist in making cell comparisons. Set the manual index pointer for reference.**

(4) Move RED probe to SECOND CELL and BLACK probe to THIRD CELL; then move RED probe to THIRD CELL and BLACK probe to FOURTH CELL, etc., until all cells have been tested. Note each cell reading so that CELL COMPARISONS CAN BE MADE. **Always store probe assembly in the space provided in the meter case.**

TEST READING INTERPRETATIONS (Fig. 3)

A—If the readings of any two cells vary FIVE scale divisions or more on the TOP scale—regardless of the colored sections in which they may fall on the bottom scale—**The battery is at or near the point of failure and should be replaced.**

B—If all cells vary LESS than five scale divisions on the TOP scale and all are in the GREEN section of the Bottom Scale—**The battery is in good condition and a safe state of charge.**

C—If all cells vary LESS than five scale divisions on the TOP scale but if any of the cells test in the RED section of the BOTTOM scale—the battery is in good condition but is in a low state of charge—**Recharge at once to avoid a starting failure.**

D—If ANY cell readings are in the "RECHARGE AND RETEST" section of the TOP SCALE and the balance of the readings are within the first four scale divisions—the battery is too low to make an accurate condition test—Recharge battery and retest.

CAUTION: Be certain to remove "surface charge" after recharge and before retesting. See "Step 2."

ADJUSTMENT OF ACID GRAVITY

Hydrometer floats usually are not calibrated below 1.160 specific gravity and cannot indicate the condition of a battery in a very low state of charge. Therefore, it may be necessary to give the battery several hours charge before a hydrometer reading will indicate that the battery is taking a charge.

If the specific gravity of all cells are not within .015 points of specified value, corrected to 80°F, at the end of a full charge, remove some of the electrolyte with a hydrometer and add a like amount of distilled water to reduce the gravity if too high, or add 1.400 Specific Gravity acid to raise specific gravity, if too low. Continue the charge so as to give the electrolyte a chance to mix and then read the gravity after another hour of charge to note the effect of the additions. Continue this adjusting procedure until gravity is brought to the desired value by charging for one hour after each adjustment.

Never adjust the specific gravity of any battery cell which does not gas freely on charge. Unless electrolyte has been lost through spilling or leaking, it

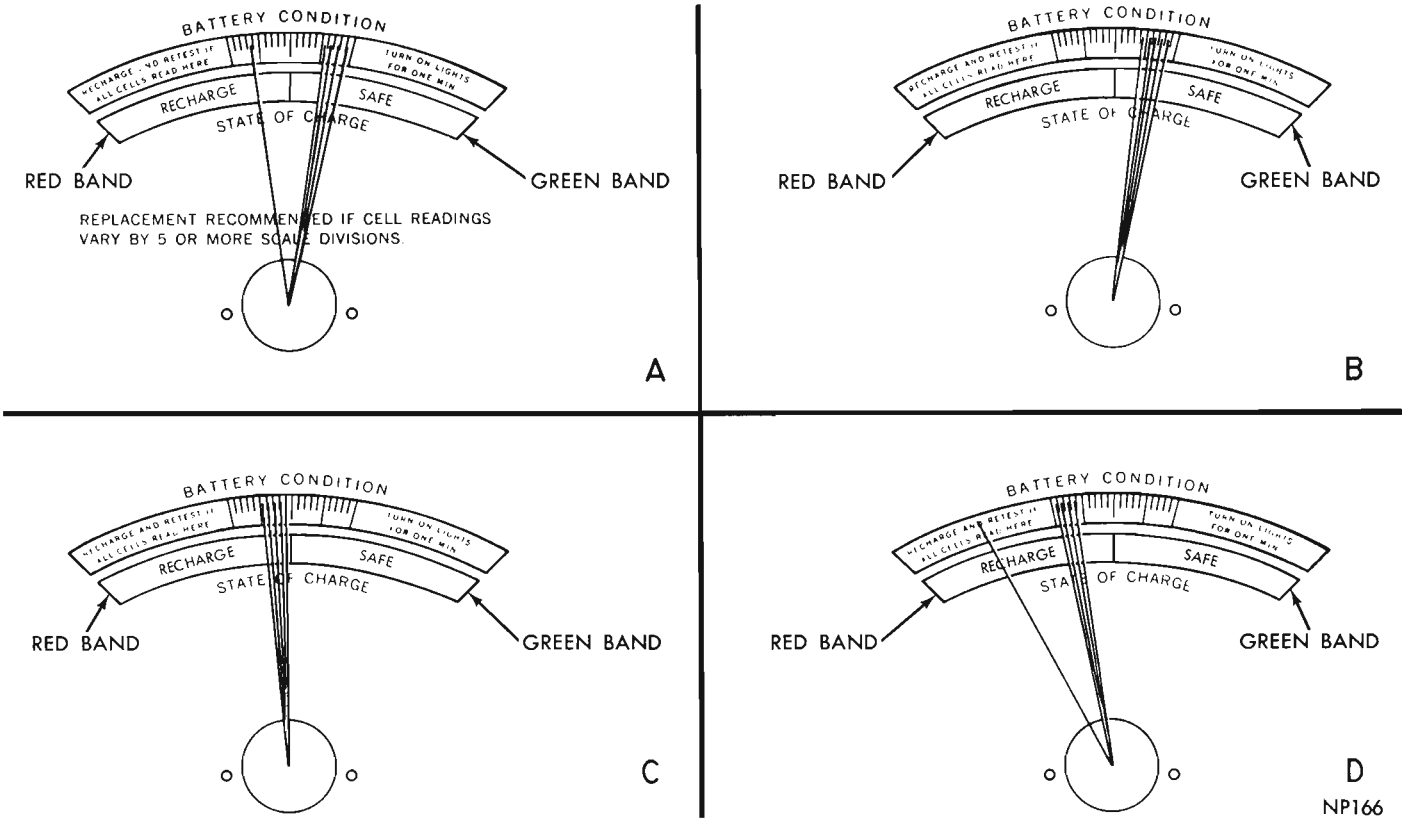

Fig. 3—Battery State of Charge

should not be necessary to add acid to a battery during its life. Acid should never be added unless one is certain that the cell will not come up to normal gravity by continued charging. Always make the temperature correction for hydrometer readings, as warm electrolyte will read low and this might be mistaken for failure of the battery to rise normally in gravity. It could also be falsely concluded that the battery would not take a full charge.

HIGH RATE DISCHARGE TEST OF BATTERY CAPACITY

Satisfactory capacity tests can be made only when battery equals or exceeds 1.220 specific gravity at 80 degrees Fahrenheit. If the reading is below 1.220 the battery should be slow charged until fully charged in order to secure proper test results.

Test Procedure

(1) Turn control knob of Battery-Starter-Tester to **OFF** position.

(2) Turn Voltmeter Selector Switch to the 16 volt position on test units so equipped.

(3) Connect test ammeter and voltmeter positive leads to battery positive terminal. Connect ammeter and voltmeter negative leads to battery negative terminal (Fig. 4). **Voltmeter clips must contact battery posts or cable clamps and not ammeter lead clips.**

(4) Turn control knob clockwise until ammeter reading is equal to three times ampere hour rating of battery.

(5) Maintain this load for 15 seconds; voltmeter should read 9.5 volts or more, which will indicate that the battery has good output capacity.

(6) After the 15 second test, turn Battery-Starter-Tester control knob to the **OFF** position.

If the voltage in the "High Rate Discharge Test" was under 9.5 volt, the battery should be test charged to determine whether the battery can be satisfactorily charged.

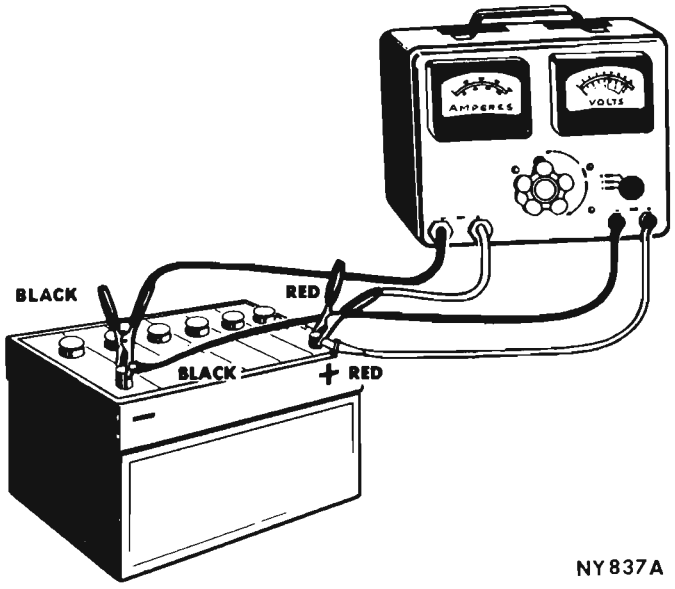

Fig. 4—High Rate Discharge Test

Charging the Battery

Three Minute Charge Test (Fig. 5)

This test should not be used if battery temperature is below 60 degree F.

(1) Connect Battery Charger positive (+) lead to battery positive terminal and negative (—) lead to battery negative terminal.

IMPORTANT: Be sure of correct polarity when charging batteries.

(2) Trip Battery Charger Power Switch to **ON** position. Turn timer switch past three minute mark then back to the three minute mark.

(3) Adjust Battery Charger Switch to highest possible rate not exceeding 40 amperes.

(4) When timer switch cuts off at the end of 3 minutes, turn timer switch back to fast charge.

(5) Use the 16 volt scale of the Battery Starter Tester and measure total voltage of battery posts while battery is being fast charged. If total voltage during charge exceeds 15.5 volts, battery is sulphated and should by cycled and slow-charged until specific gravity reaches 1.260 (See "Slow Charging"). **A slow charge is preferable to bring the battery up to a full charge.**

If specific gravity remains constant after testing battery at one hour intervals for three hours, battery is at its highest state of charge.

(6) Make another capacity test. If capacity test does not meet specifications, replace battery.

Fast Charging the Battery (Fig. 6)

If adequate time for a slow charge is not available, a high rate (FAST) charge is permissible and will give a sufficient charge in one hour enabling the battery and alternator to continue to carry the electrical load.

Connect Battery Charger positive (+) lead to battery positive terminal and negative (—) lead to battery negative terminal. If battery is not removed from

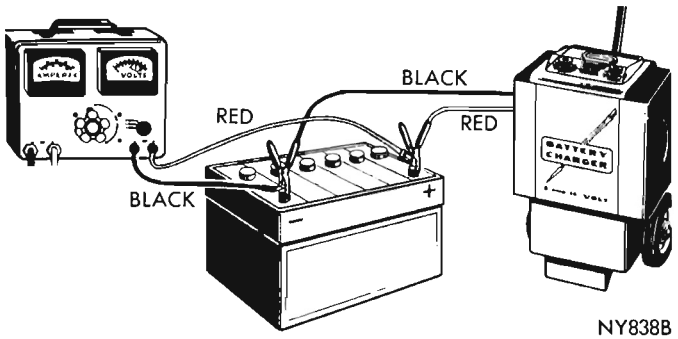

Fig. 5—Three Minute Charge Test

vehicle, **BE SURE** ignition switch is turned off and all electrical accessories are turned off during charging. **CAUTION: The battery can be damaged beyond repair unless the following precautions are taken:**

(1) Battery electrolyte temperature must **NEVER** exceed 125 degrees Fahrenheit.

If this temperature is reached, battery should be cooled by reducing charging rate or remove battery from the circuit.

(2) As batteries approach full charge electrolyte in each cell will begin to gas or bubble. Excessive gassing must not be allowed.

(3) Do not fast charge longer than one hour.

If battery does not show a significant change in specific gravity after one hour of "FAST" charge, the slow charge method should be used.

Remember to use temperature correction when checking specific gravity. **The manufacturers of high rate charging equipment generally outline the necessary precautions and some models have thermostatic temperature limiting and time limiting controls.**

WARNING: When batteries are being charged an explosive gas mixture forms beneath the cover of each cell. Do not smoke near batteries on charge or which have recently been charged. Do not break live circuits at the terminals of the batteries on charge. A spark will occur where the live circuit is broken. Keep all open flames away from the battery.

Slow Charging Batteries

Many discharged batteries can be brought back to good condition by slow charging; especially batteries that are sulphated.

Battery should be tested with a hydrometer and a record kept of the readings taken at regular intervals throughout the charge. When a cell has a specific gravity reading that is 25 points (.025) or more below other cells, that cell is faulty and battery should be replaced.

Safe slow charging rates are determined by allowing one ampere per positive plate per cell. Proper slow charging rate would be 3 amperes for a 38 ampere hour battery, 4 amperes for a 48 ampere hour battery; 5 amperes for a 59 ampere hour battery; and 6 amperes for a 70 ampere hour battery.

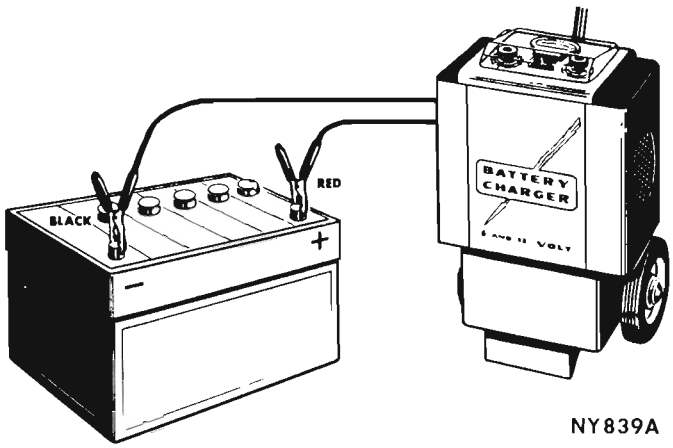

Fig. 6—Fast Charging the Battery

The average length of time necessary to charge a battery by the slow charge method at normal rates is from 12 to 16 hours, however, when a battery continues to show an increase in specific gravity, battery charge should be continued even if it takes 24 hours or more. **Watch the temperature of batteries carefully and if the temperature of any one of them reaches 110°F., lower the charging rate.**

Battery will be fully charged when it is gassing freely and when there is no further rise in specific gravity after three successive readings taken at hourly intervals. Make sure hydrometer readings are corrected for temperature.

The rate of charge for a sulphated battery should be no more than 1/2 the normal slow charge rate. Many sulphated batteries can be brought back to a useful condition by slow charging at half the normal charging rate from 60 to 100 hours. This long charging cycle is necessary to reconvert crystalline lead sulphate into active materials. **When a battery takes a full charge, but is returned several times in need of a recharge, check for a cracked cell partition with a syringe to provide air pressure; bubbles will appear in an adjacent cell if a crack is present.**

REDUCTION GEAR STARTER

INDEX

	Page
Amperage Draw Test	7
Assembling the Starter	13
Brushes and Springs Replacement	11
Bushings Replacement	12
Cleaning the Starter Parts	10
Disassembling the Starter	9
Field Coils Replacement	12
General Information	6
Ground Circuit Test	8
Insulated Circuit Test	8
Installing the Starter	16
Removing the Starter	8
Resistance Test	8
Service Diagnosis	6
Servicing the Starter Clutch Unit	13
Specifications	99
Testing the Starter (Bench Test)	8
Testing Armature	11
Testing Field Coils for Ground	11

GENERAL INFORMATION

The starter has a 3.5 to 1 reduction gear set built into the Starter assembly, which is housed in an aluminum die casting, Fig. 1. The starter utilizes a solenoid shift device, the housing of the solenoid is integral with the starter drive end housing.

SERVICE DIAGNOSIS

Condition	Possible Cause	Correction
STARTER FAILS TO OPERATE	(a) Weak battery or dead cell in battery.	(a) Test specific gravity. Recharge or replace battery as required.
	(b) Ignition switch faulty.	(b) Test and replace switch if necessary.
	(c) Loose or corroded battery cable terminals.	(c) Clean terminals and clamps, replace if necessary. Apply a light film of petrolatum to terminals after tightening.
	(d) Open circuit, wire between the ignition—starter switch and ignition terminal on starter relay.	(d) Inspect and test all the wiring.
	(e) Starter relay defective.	(e) Test relay and replace if necessary.
	(f) Faulty starter.	(f) Test and repair as necessary.
	(g) Armature shaft sheared.	(g) Test and repair.
	(h) Open solenoid pull-in wire.	(h) Test and replace solenoid if necessary.
STARTER FAILS AND LIGHTS DIM	(a) Weak battery or dead cell in battery.	(a) Test for specified gravity. Recharge or replace battery as required.
	(b) Loose or corroded battery cable terminals.	(b) Clean terminals and clamps, replace if necessary. Apply a light film of petrolatum to terminals after tightening.
	(c) Internal ground in windings.	(c) Test and repair starter.
	(d) Grounded starter fields.	(d) Test and repair starter.
	(e) Armature rubbing on pole shoes.	(e) Test and repair starter.
STARTER TURNS, BUT ENGINE DOES NOT ENGAGE	(a) Starter clutch slipping.	(a) Replace clutch unit.
	(b) Broken clutch housing.	(b) Test and repair starter.
	(c) Pinion shaft rusted, dirty or dry, due to lack of lubrication.	(c) Clean, test and lubricate.
	(d) Engine basic timing wrong.	(d) Check engine basic timing and condition of distributor rotor and cap.
	(e) Broken teeth on engine ring gear.	(e) Replace ring gear. Inspect teeth on starter clutch pinion.
STARTER RELAY DOES NOT CLOSE	(a) Batttery discharged.	(a) Recharge or replace battery.
	(b) Faulty wiring.	(b) Test for open circuit, wire between starter relay ground terminal post and neutral starter switch (automatic transmission only). Also test for open circuit; wire between ignition-starter switch and ignition terminal and starter relay.
	(c) Neutral starter switch on automatic transmission faulty.	(c) Test and replace the switch if necessary.
	(d) Starter relay faulty.	(d) Test and replace if necessary.
RELAY OPERATES BUT SOLENOID DOES NOT	(a) Faulty wiring.	(a) Test for open circuit wire between starter-relay solenoid terminal and solenoid terminal post.
	(b) Faulty solenoid switch or connections.	(b) Test for loose terminal connections between solenoid and starter field.
	(c) Solenoid switch contacts corroded.	(c) Test and replace solenoid if necessary.
	(d) Broken lead or a loose soldered connection inside solenoid switch (brush holder plate).	(d) Test and replace solenoid if necessary.
SOLENOID PLUNGER VIBRATES BACK AND FORTH WHEN SWITCH IS ENGAGED	(a) Battery low.	(a) Test for specific gravity of battery. Replace or recharge battery.
	(b) Faulty wiring.	(b) Test for loose connections at relay, ignition-starter switch and solenoid.

Condition	Possible Cause	Correction
	(c) Lead or connections broken inside solenoid switch cover (brush holder plate) or open hold-in wiring.	(c) Test and replace solenoid if necessary.
	(d) Check for corrosion on solenoid contacts.	(d) Test and clean the contacts.
STARTER OPERATES BUT WILL NOT DISENGAGE WHEN IGNITION STARTER SWITCH IS RELEASED	(a) Broken solenoid plunger spring or spring out of position.	(a) Test and repair.
	(b) Faulty ignition-starter switch.	(b) Test and replace the switch if necessary.
	(c) Solenoid contact switch plunger stuck in solenoid.	(c) Remove contact switch plunger, wipe clean of all dirt, apply a film of SAE 10 oil on plunger, wipe off excess.
	(d) Insufficient clearance between winding leads to solenoid terminal and main contactor in solenoid.	(d) Test and repair.
	(e) Faulty relay.	(e) Test and replace relay if necessary.

SERVICE PROCEDURES

AMPERAGE DRAW TEST (with Starter Tester)

Check battery electrolyte gravity with a reliable hydrometer. Gravity should be not less than 1.220 (temperature corrected). Or see that battery passes the High Rate Discharge Test shown in the "Battery" section of this manual.

Turn Battery—Starter Tester **CONTROL KNOB** to "OFF" position.

Turn voltmeter Selector Switch to 16 Volt position. Connect heavy **Positive** ammeter lead (Red) to **Positive** battery terminal. Connect heavy **Negative** ammeter lead (Black) to **Negative** battery terminal.

Connect **Positive** voltmeter lead (Red) to **Positive** battery terminal. Connect **Negative** voltmeter lead (Black) to **Negative** battery terminal.

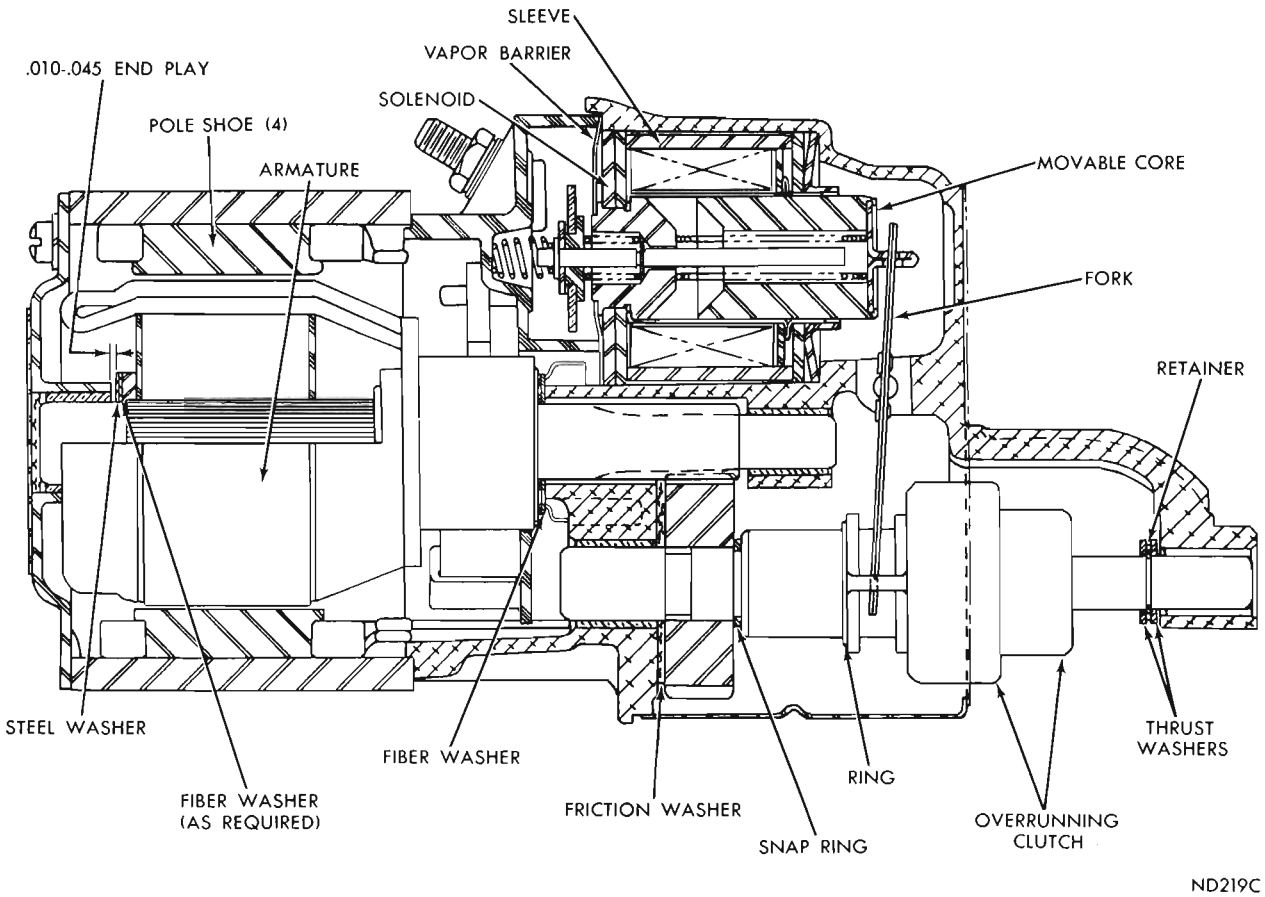

Fig. 1—Starter Cross Section

DISCONNECT ignition primary lead from ignition ballast resistor, or primary wire from either side of coil, to prevent engine from starting.

Crank engine with a remote control starter switch and observe **Exact** reading on Voltmeter. Stop cranking engine. Without cranking engine, turn tester **CONTROL KNOB** clockwise until voltmeter reads **Exactly** the same as when engine was being cranked with the remote control starter switch. Ammeter now indicates starter amperage draw. Check specifications. **Engine should be up to operating temperature. Extremely heavy oil or a tight engine will increase starter amperage draw.**

INSULATED CIRCUIT TEST

(1) Test battery electrolyte specific gravity. Specific gravity should be 1.220 or above. If battery specific gravity is below 1.220, recharge battery to full charge before proceeding with test.

(2) Turn voltmeter selector switch to 4 volt position.

(3) Disconnect ignition coil secondary cable.

(4) Connect voltmeter positive lead to battery positive post and voltmeter negative lead to solenoid connector which connects to the starter field coils.

The voltmeter will read off scale to the right until starter is actuated.

(5) Connect remote control switch to battery and solenoid terminal of starter relay.

(6) Crank engine with a remote starter control starter switch and observe voltmeter reading. Voltmeter reading should not exceed .3 volt. A voltmeter reading .3 volt or less indicates voltage drop is normal in cables, starter relay switch solenoid switch and connections between battery and starter motor. See "Starter Ground Circuit Test."

If voltmeter reading is more than .3 volt, it indicates high resistance in starter insulated circuit. Make following tests to isolate point of excessive voltage loss:

(a) Remove voltmeter lead from solenoid connector and connect to the following points, repeating test at each connection. Starter terminal of solenoid, battery terminal of solenoid, battery cable terminal at solenoid, starter relay and cable clamp at the battery.

(b) A small change will occur each time a normal portion of the circuit is removed from test. A definite change in the voltmeter reading indicates that the last part eliminated in test is at fault.

Maximum allowable voltage loss is as follows:

Battery insulated cable	.2 volt
Solenoid switch	.1 volt
Each connection	.0 volt

Replace faulty cables. Clean and tighten all connections.

RESISTANCE TEST

(1) Test battery electrolyte specific gravity. Specific gravity should be 1.220 or above.

(2) Disconnect positive battery lead from battery terminal post. Connect an 0 to 300 scale ammeter between disconnected lead and battery terminal post.

(3) Connect a test voltmeter with 10 volt scale division between battery positive post and starter switch terminal at starter solenoid.

(4) Crank engine and observe reading on voltmeter and ammeter. Voltage should not exceed .3 volt. A voltage reading that exceeds .3 volt indicates there is high resistance caused from loose circuit connections, a faulty cable, burned starter relay or burned solenoid switch contacts. A current that is high and is combined with slow cranking speed, indicates starter should be removed and repaired.

GROUND CIRCUIT TEST

(1) Connect test voltmeter positive lead to starter housing and voltmeter negative lead to battery negative post.

(2) Crank engine with a remote control starter switch and observe voltmeter reading. Voltmeter reading should not exceed .2 volt. A reading of .2 volt or less indicates the resistance of the ground cable and connections is normal. If voltmeter reading is more than .2 volt, it indicates excessive voltage loss in starter ground circuit. Make the following tests to isolate point of excessive voltage loss. Repeating test at each connection.

(a) Starter drive housing.

(b) Cable terminal at engine.

(c) Cable clamp at battery.

A small change will occur each time a normal portion of circuit is removed from the test. A definite change in voltmeter reading indicates that last part eliminated in the test is at fault.

Maximum allowable voltage loss is as follows:

Battery ground cable .2 volt
Engine ground circuit .1 volt
Each connection .0 volt

REMOVING THE STARTER

(1) Disconnect ground cable at battery.

(2) Remove cable at starter.

(3) Disconnect solenoid lead wires at solenoid terminals.

(4) Remove one stud nut and one bolt attaching starter to flywheel housing, slide automatic transmission oil cooler tube bracket off the stud (if so equipped) and remove the starter.

TESTING THE STARTER (Bench Test)

Free Running Test

(1) Place starter in a vise and connect a fully

charged, 12 volt battery to starter as follows:

(a) Connect a test ammeter (100 amperes scale) and a carbon pile rheostat in series with battery positive post and starter terminal.

(b) Connect a voltmeter (15 volt scale) across starter.

(c) Rotate carbon pile to full-resistance position.

(d) Connect battery cable from battery negative post to starter frame.

(e) Adjust the rheostat until battery voltage shown on voltmeter reads 11 volts. Amperage draw should be as shown in specifications.

Locked-Resistance Test

(1) Install starter in a test bench.

(2) Follow instructions of test equipment manufacturers and test starter against following specifications. With applied battery voltage adjusted to 4 volts. Amperage draw should be as shown in specifications.

DISASSEMBLING THE STARTER

(1) Place the starter gear housing in a vise equipped with soft jaws. Use the vise as support fixture only. **DO NOT** clamp.

(2) Remove two through bolts and starter end head assembly.

(3) Carefully pull armature up and out of gear housing and starter frame and field assembly. Remove steel and fiber thrust washer. **The wire of shunt field coil is wrapped on the brush terminal. One set of brushes are connected to this terminal. The other pair of brushes is attached to the series field coils by means of a terminal screw. Carefully pull frame and field assembly up just enough to expose terminal screw and wire wrap connection of shunt field at brush terminal. Place two wood blocks between starter frame and starter gear housing to facilitate removal of terminal screw, Fig. 2.**

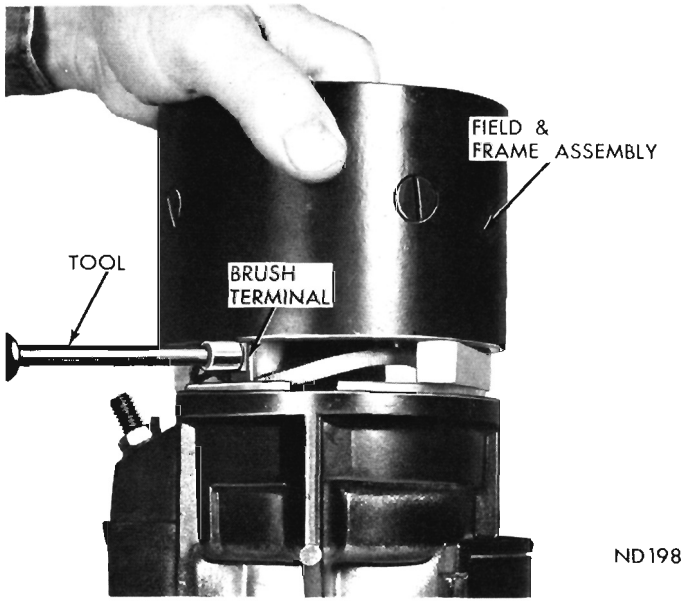

Fig. 2—Removing or Installing Terminal Screw

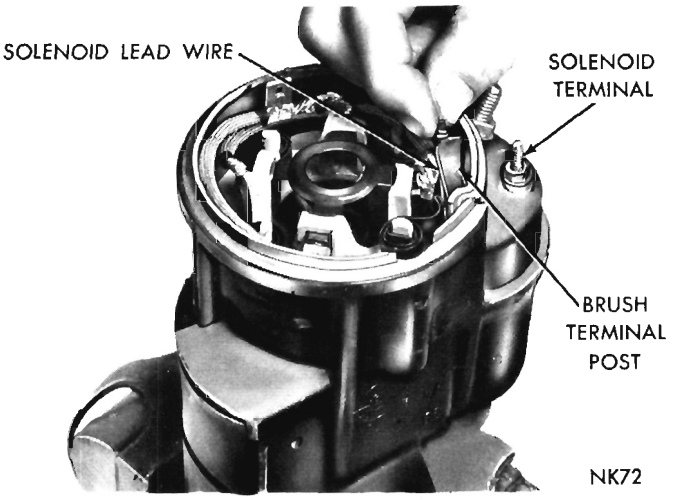

Fig. 3—Unwinding or Winding Solenoid Lead Wire

(4) Support brush terminal by placing a finger behind the terminal and remove terminal screw.

(5) Unwrap shunt field coil lead from starter brush terminal. **Starter brush holder plate with starter brush terminal, contact and brushes is serviced as an assembly.**

(6) Remove all old sealer at brush holder plate and gear housing.

(7) Unwrap solenoid lead wire and unwind wire from starter brush terminal (Fig. 3).

(8) Remove screw attaching brush holder plate to starter gear housing (Fig. 4).

(9) Remove nut (11/32 wrench), steel washer and insulating washer from solenoid terminal.

(10) Straighten solenoid wire and remove brush holder plate with brushes as an assembly.

(11) Remove solenoid assembly from gear housing well (Fig. 5).

(12) Remove nut, steel washer and sealing washer from starter battery terminal.

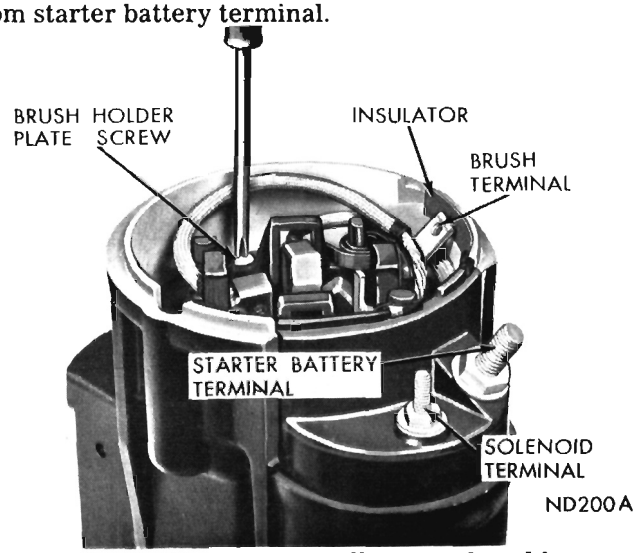

Fig. 4—Removing or Installing Brush Holder Plate Screw

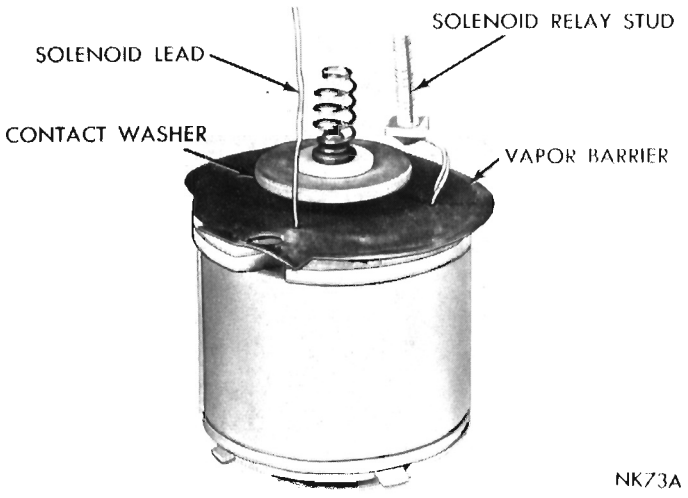

Fig. 5—Solenoid Assembly

(13) Remove starter battery terminal from holder plate.

(14) Remove solenoid contact and plunger from solenoid.

(15) Remove solenoid return spring from well of solenoid housing moving core.

(16) Remove dust cover from gear housing (Fig. 6).

(17) Release retainer that positions driven gear on pinion shaft (Fig. 7).

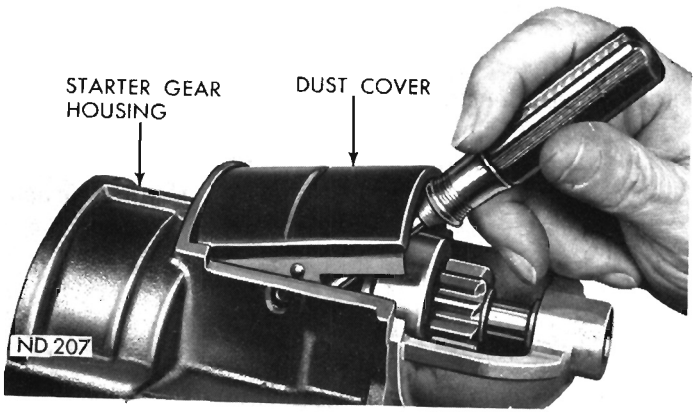

Fig. 6—Removing Dust Cover

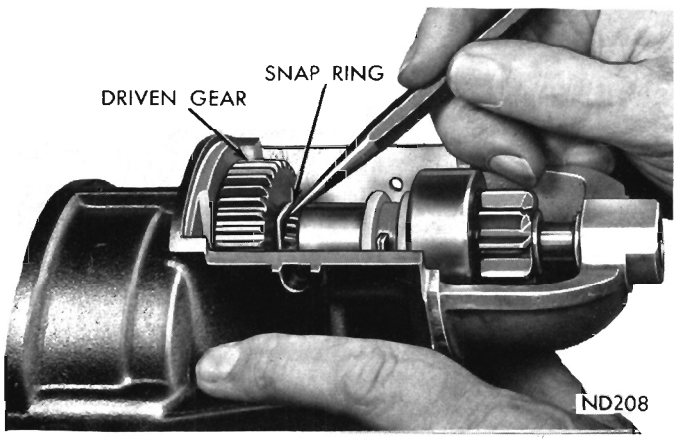

Fig. 7—Removing the Driven Gear Snap Ring

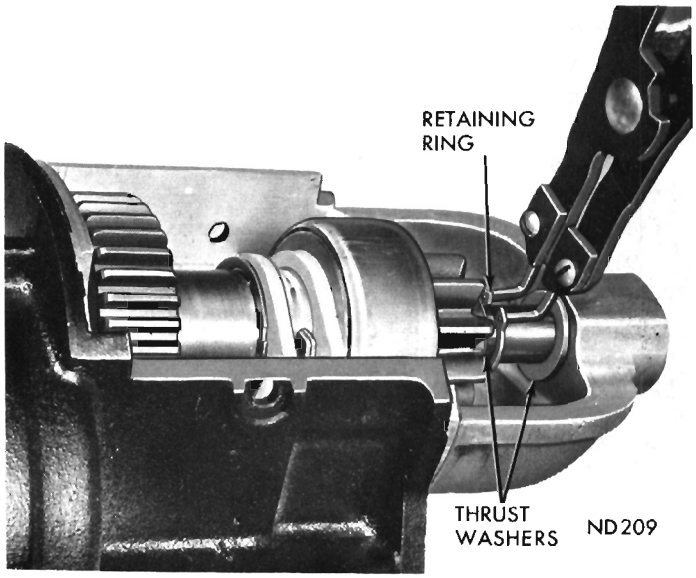

Fig. 8—Removing or Installing Pinion Shaft Retainer Ring

CAUTION: Retainer is under tension and a cloth should be placed over the retainer to prevent it from springing away after removal.

(18) Release retainer ring at front of pinion shaft (Fig. 8). **Do not spread retainer ring any greater than outside diameter of pinion shaft otherwise lock ring can be damaged.**

(19) Push pinion shaft towards rear of housing (Fig. 9) and remove retainer ring and thrust washers, clutch and pinion assembly, with the two shifter fork nylon actuators as an assembly (Fig. 10).

(20) Remove driven gear and friction washer.

(21) Pull shifting fork forward and remove solenoid moving core (Fig. 11).

(22) Remove shifting fork retainer pin (Fig. 12) and remove clutch shifting fork assembly.

CLEANING THE STARTER PARTS

(1) Do not immerse parts in cleaning solvent. Immersing field frame and coil assembly and/or armature will damage insulation. Wipe these parts with a clean cloth **only.**

(2) Do not immerse clutch unit in cleaning solvent. The clutch is pre-lubricated at the factory and solvent will wash lubricant from the clutch.

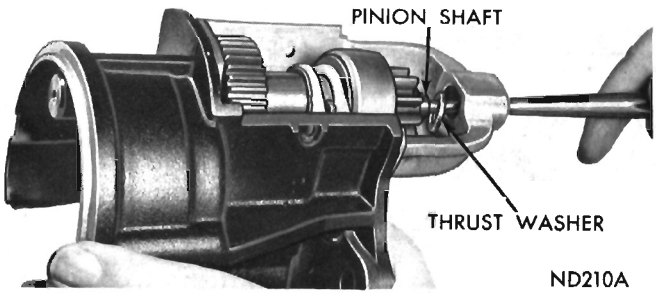

Fig. 9—Removing Pinion Shaft

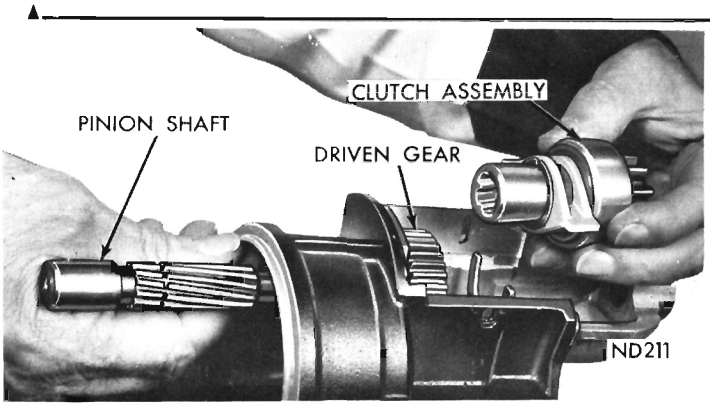

Fig. 10—Removing or Installing Clutch Assembly

(3) The starter-clutch outer housing and pinion gear may be cleaned with a cloth moistened with cleaning solvent and wiped dry with a clean dry cloth.

(4) Clean all corrosion from solenoid assembly and inside of solenoid housing. These metal parts are part of the solenoid hold-in ground circuit and must be clean.

(5) Clean terminal contacts and contactor with crocus cloth.

(6) Thoroughly clean outside area of brush plate to remove all oil and dirt.

BRUSHES AND SPRINGS REPLACEMENT

(1) Brushes that are worn more than 1/2 the length of new brushes, or are oil-soaked, should be replaced.

(2) When **resoldering** the shunt field and solenoid lead, make a strong low resistance connection using a high temperature solder and resin flux. **Do not use acid** or acid core solder. **Do not** break the shunt field

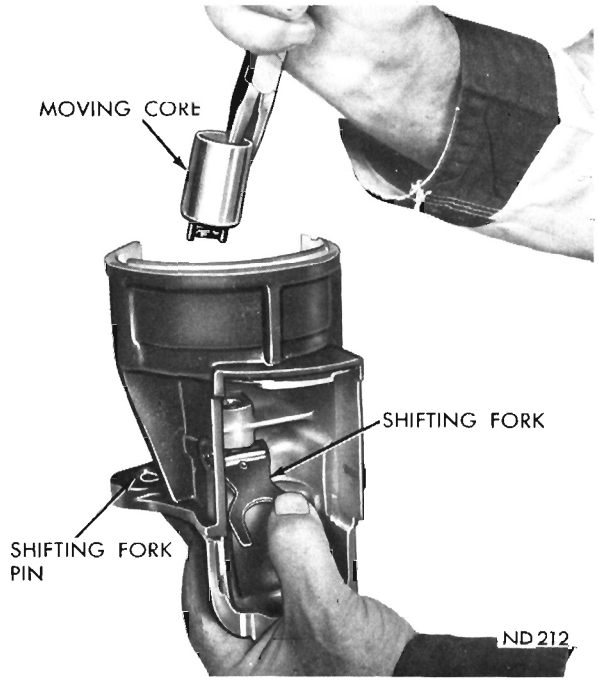

Fig. 11—Removing or Installing Moving Core

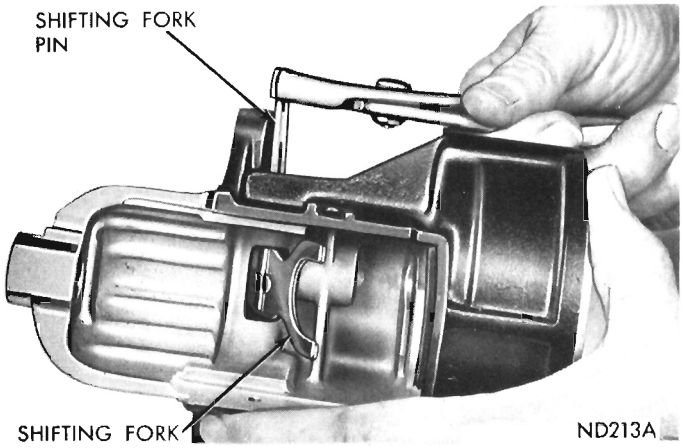

Fig. 12—Removing or Installing Shifting Fork Pin

wire units, when removing and installing brushes.

(3) Measure brush spring tension with a spring scale hooked under the spring near the end. Pull scale on a line parallel to the edge of brush and take a reading just as spring end leaves the brush. Spring tension should be 32 to 36 ounces. Replace springs that do not meet specifications.

TESTING ARMATURE

Testing Armature for Short Circuit

Place armature in growler and hold a thin steel blade parallel to the core and just above it, while slowly rotating armature in growler. A shorted armature will cause blade to vibrate and be attracted to the core. Replace armature if shorted.

Testing Armature for Ground

Contact armature shaft and each of the commutator riser bars with a pair of test lamp test prods. If lamp lights, it indicates a grounded armature. Replace grounded armature.

Testing Commutator Run-Out, Refacing and Undercutting

Place armature in pair of "V" block and measure runout with dial indicator. Measure both shaft and commutator. A bent shaft requires replacement of armature. When commutator runout exceeds .003 inch, commutator should be refaced. Remove only a sufficient amount of metal to provide a smooth, even surface.

TESTING FIELD COILS FOR GROUND

(1) Remove field frame assembly from starter.

(2) Carefully drill out the rivet attaching the series field coil ground lead and shunt field coil lead to field frame.

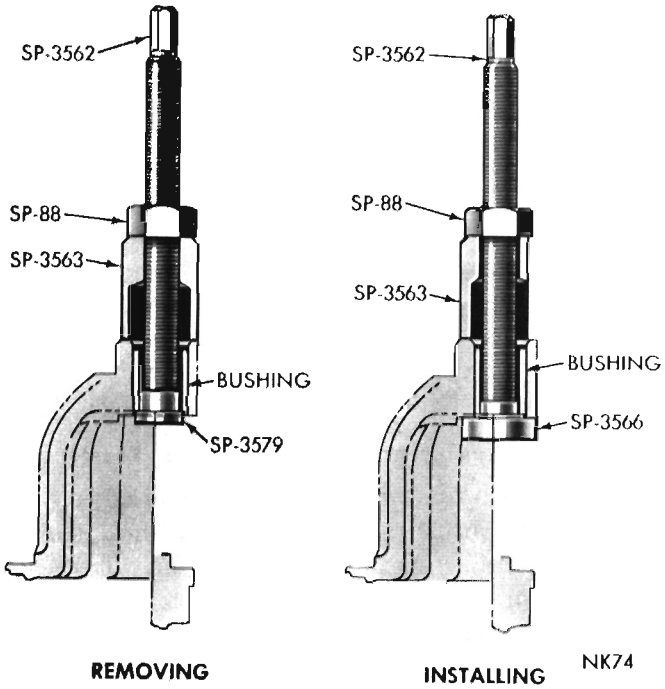

Fig. 13—Removing and Installing Pinion Housing End Bushing

(3) Insulate field coil leads from field frame.

(4) Test for ground using a 110 volt test lamp. Touch one probe of test lamp to series field coil lead and other probe to field frame. Lamp should not light. Repeat the procedure for shunt field coil.

If lamp lights, it indicates that field coils are grounded and require replacement.

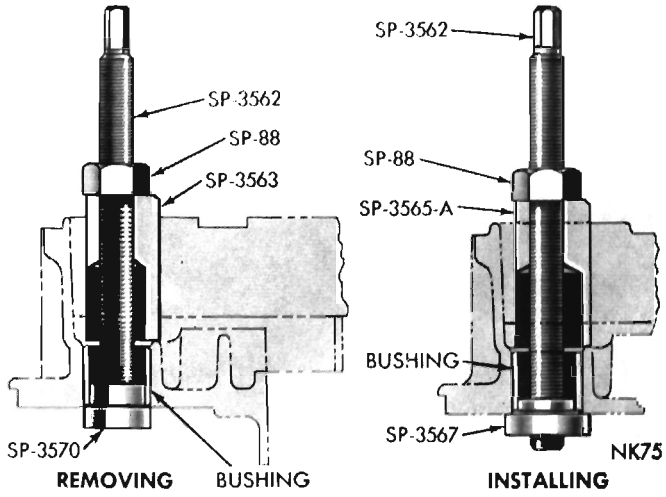

Fig. 14—Removing and Installing Pinion Housing Drive Shaft Bushing

FIELD COILS REPLACEMENT

A pole shoe impact screwdriver Tool C-3475 should be used to remove and install field coils to prevent damage to pole shoe screws and for proper tightening. Pole shoes that are loose and not properly seated may cause armature core to rub on pole shoes. **Make sure area between the leads and starter frame is clean. Peen new rivet securely to insure a good electrical contact.**

BUSHINGS REPLACEMENT

Inspect armature shaft bearing, pinion shaft surfaces and bushings for wear. Try the bushings for

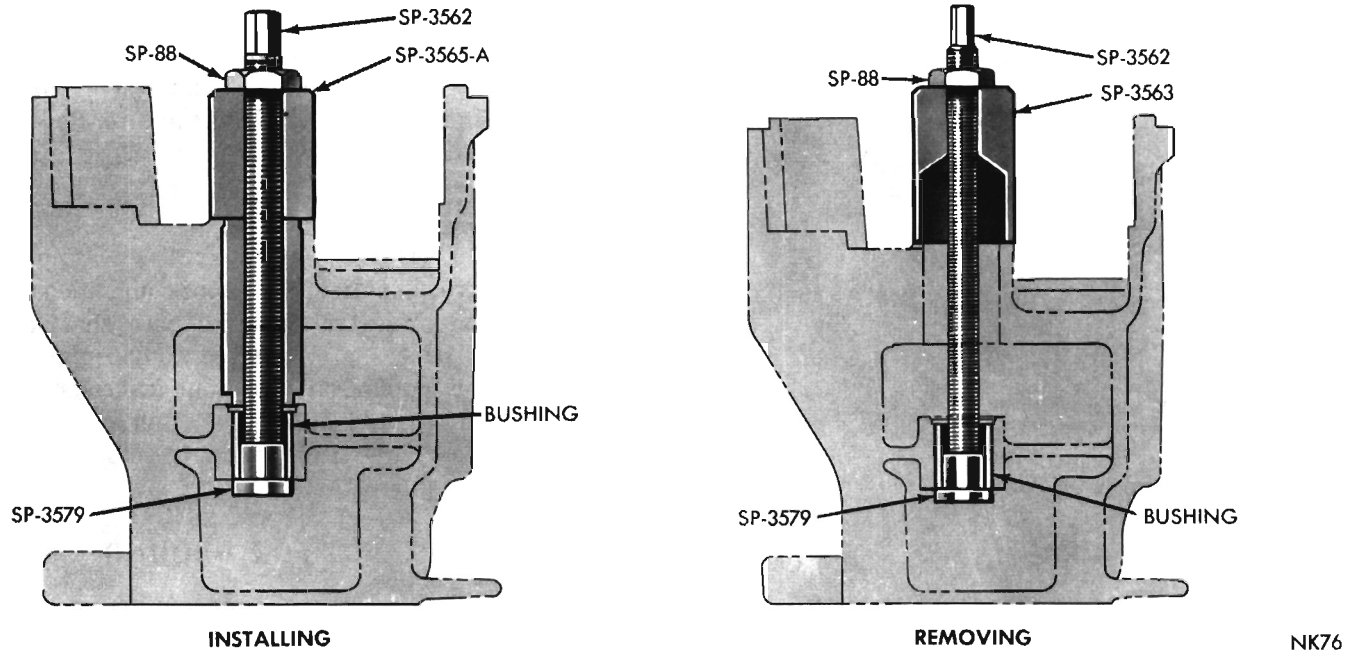

Fig. 15—Removing and Installing Pinion Housing Armature Shaft Bushing

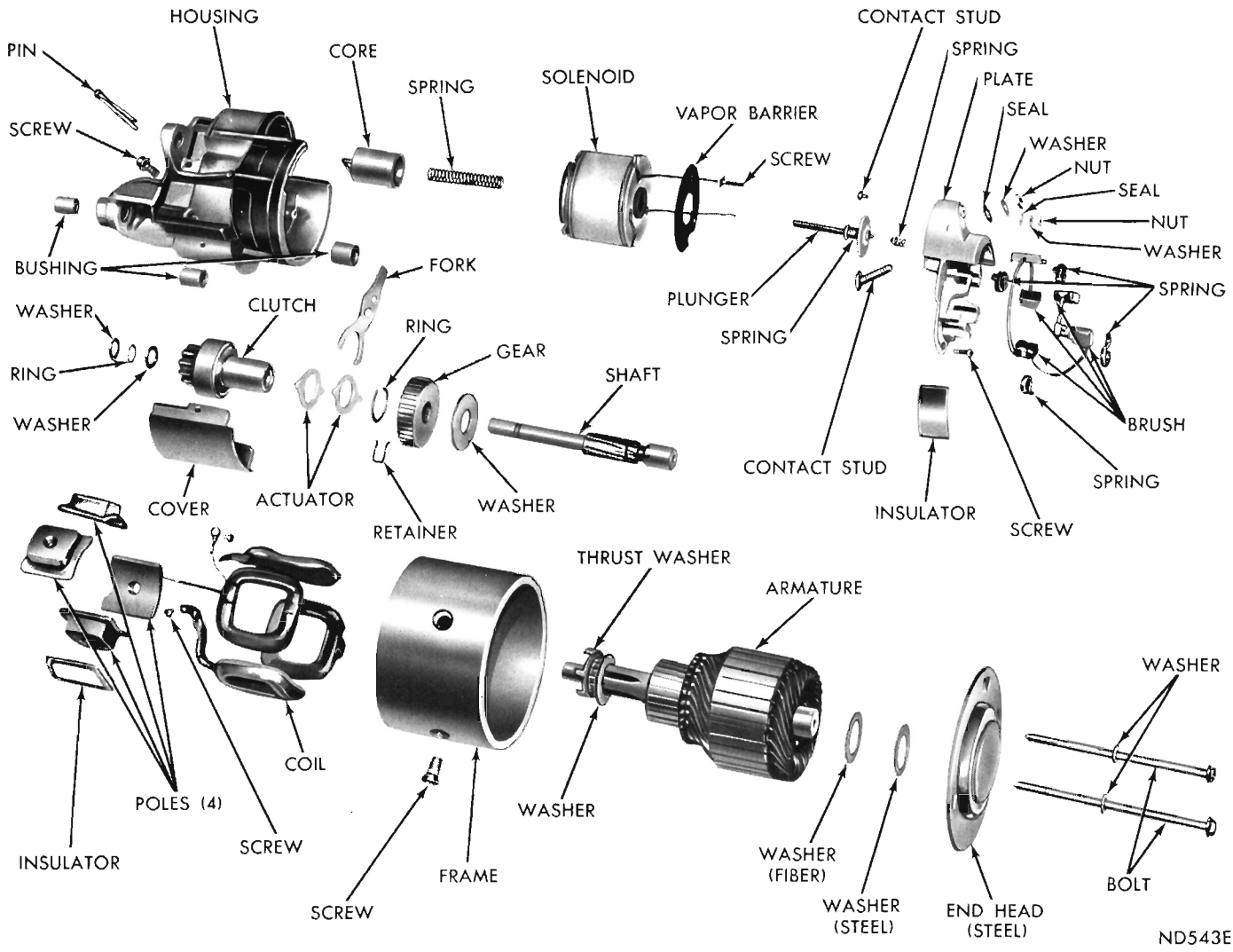

Fig. 16—Starter (Exploded View)

wear by inserting the shafts and test for side play. **Pre-sized starting motor bushings are available as service bushings. Use Tool C-3944 to remove old bushings and install the new. No burnishing or reaming is required to fit pre-sized bushings.**

The C-3944 Tool and its adaptors are designed to service all of the gear reduction motor bushings with the exception of the end head bushing. End head bushing and end head are serviced as an assembly.

Remove and install bushings, (Figs. 13, 14 and 15).

SERVICING THE STARTER CLUTCH UNIT

Do not immerse starter clutch unit in a cleaning solvent. Starter clutch is pre-lubricated at the factory and a solvent will wash lubricant from the clutch.

The starter clutch outer housing and pinion gear may be cleaned with a cloth moistened with a cleaning solvent and wiped dry with a clean dry cloth.

Rotate the pinion. Pinion gear should rotate smoothly in one direction (not necessarily easily), but should not rotate in opposite direction. If starter clutch unit does not function properly, or pinion is worn, chipped or burred, replace starter clutch unit.

ASSEMBLING THE STARTER (Fig. 16)

The shifter fork consists of two spring steel plates assembled with two rivets. There should be approximately 1/16 inch side movement as shown in Figure 17 to insure proper pinion gear engagement. Lubricate between the plates sparingly with SAE 10 engine oil.

(1) Position shifter fork in drive housing and install shifting fork retainer pin. One tip of pin should be straight, other tip should be bent at a 15 degree angle away from the housing. The fork and retainer pin should operate freely after bending tip of pin.

(2) Install solenoid moving core and engage shifting fork (Fig. 11).

(3) Enter pinion shaft into drive housing and install friction washer and drive gear.

(4) Install clutch and pinion assembly, thrust washer, retaining ring and thrust washer (Fig. 10).

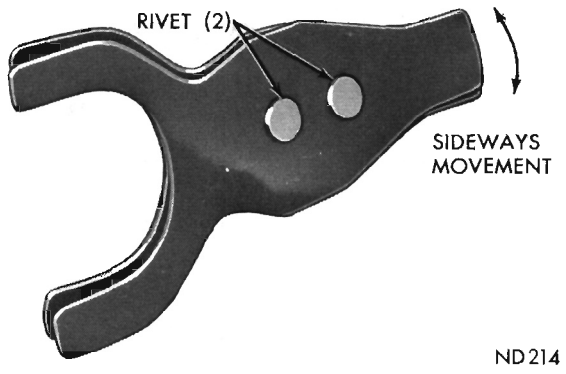

Fig. 17—Shifter Fork Assembly

(5) Complete installation of pinion shaft engaging shifting fork with clutch actuators. Figure 18 shows correct relation of parts at assembly. **The friction washer must be positioned on shoulder of splines of the pinion shaft before driven gear is positioned.**

(6) Install driven gear snap ring (Fig. 7).

(7) Install pinion shaft retaining ring (Fig. 8).

(8) Bend the four (4) Tangs of coil retainer "up" to a measurement of 5/32" to 3/16" above surface of retainer (Fig. 19) to ensure higher compression and a more positive ground.

(9) Install starter solenoid return spring into bore of movable core.

(10) Install vapor barrier if removed over solenoid lead wires, inserting double wires of terminal stud into large hole (Fig. 5) and solenoid winding lead wire into the small hole. **Inspect condition of starter solenoid switch contacting washer, if top of washer is burned from arcing, disassemble contact switch plunger assembly and reverse the washer.**

(11) Install solenoid contact plunger assembly into solenoid and reform double wires to allow for proper entry of terminal stud into brush holder with the double wires curved around the contactor.

CAUTION: The contactor must not touch the double wires when solenoid is energized after assembly is completed (Fig. 5).

Make sure contact spring is positioned on the shaft of the solenoid contact plunger assembly.

(12) Assemble battery terminal stud in brush holder, placing sealing washer under plain washer.

Inspect condition of the contacts in brush holder plate. If contacts are badly burned, replace brush holder with brushes and contacts as an assembly.

(13) Enter solenoid lead wire through hole in brush holder (Fig. 20) and install solenoid stud, insulating washer, flat washer and nut. **Use care when installing solenoid contact seal over tab on brush plate to prevent tearing the seal.**

(14) Wrap solenoid lead wire tightly around brush terminal post as shown in Figure 21 and solder securely with a high temperature resin core solder and resin flux.

(15) Carefully enter solenoid coil and brush plate

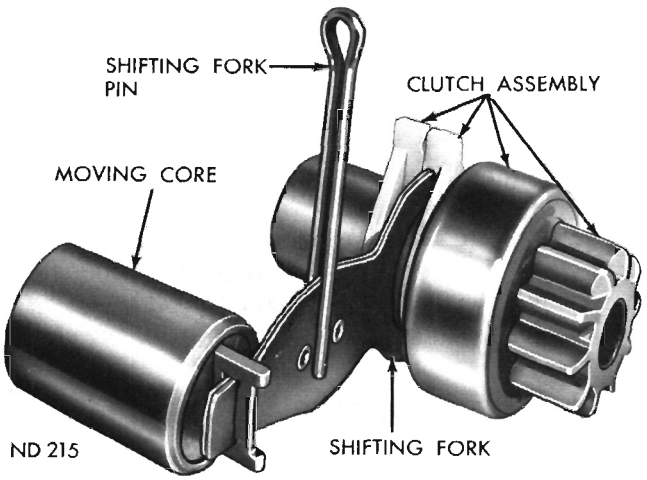

Fig. 18—Shifter Fork and Clutch Arrangement

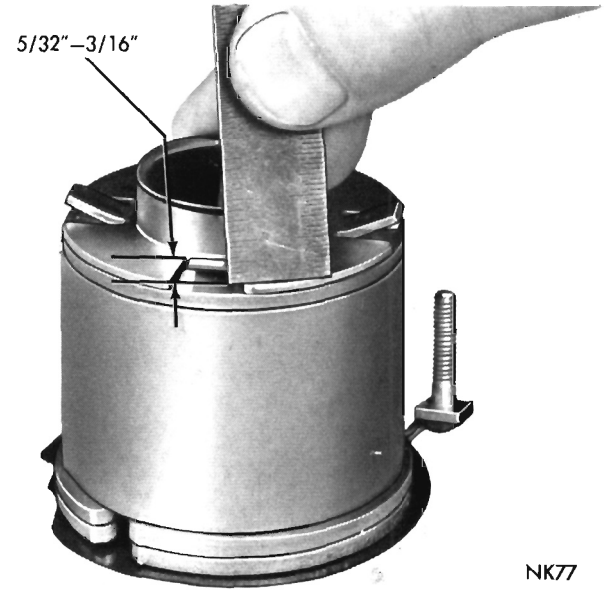

Fig. 19—Checking Height of Solenoid Coil Retainer Tangs

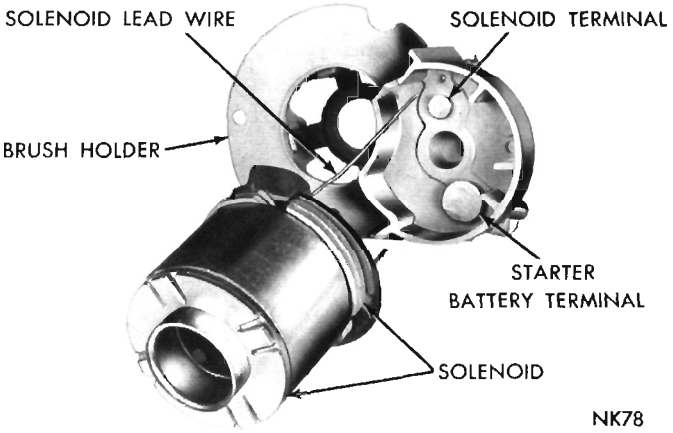

Fig. 20—Assembling Solenoid to Brush Holder Plate

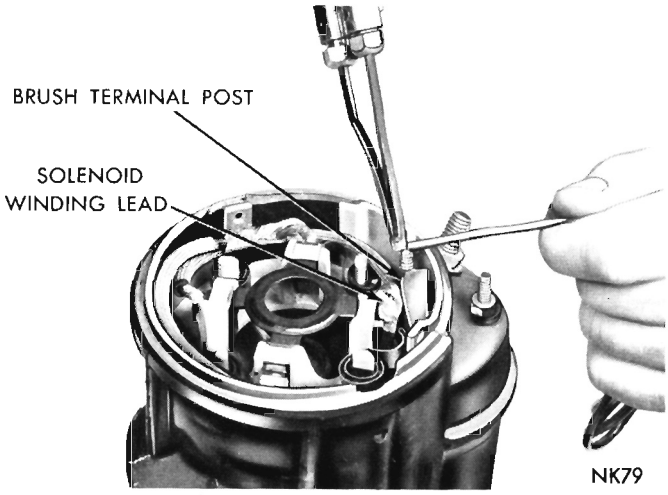

Fig. 21—Soldering Solenoid Winding Lead To Brush Terminal

assembly into bore of gear housing and position brush plate assembly into starter gear housing. Align tongue of ground terminal with notch in brush holder (Fig. 22).

(16) After the brush holder is bottomed in housing, install attaching screw (Fig. 3). Tighten screw to 10-15 inch-pounds. Make sure the insulating tape is in position (Fig. 3).

(17) Position brushes with armature thrust washer as shown in Figure 21. This will hold brushes out and facilitate proper installation of armature.

(18) On starters so equipped, solder shunt coil lead wire to starter brush terminal (Fig. 23).

(19) Install brush terminal screw (Fig. 2).

(20) Position field frame to the exact position on



Fig. 22—Installing Solenoid and Brush Holder into Gear Housing



Fig. 23—Soldering Shunt Coil Lead Wire

gear housing and enter armature into field frame and starter gear housing (Fig. 24); carefully engaging splines of shaft with reduction gear by rotating armature slightly to engage the splines.

(21) Install thrust washer (fiber) and washer (steel) on armature shaft.

(22) Position starter end head assembly and install starter frame lockwashers and through bolts. Tighten through bolts securely.

(23) Clean area at the joint between brush holder plate to field frame and gear housing mating joint. Apply a bead of brush plate sealer Part NO. 2421847 around the four sides of the joint (Fig. 25).

CAUTION: Sealer must be flowed continuously to avoid gaps. After the bead has been flowed on, use a brush or small paddle moistened in mineral spirits to

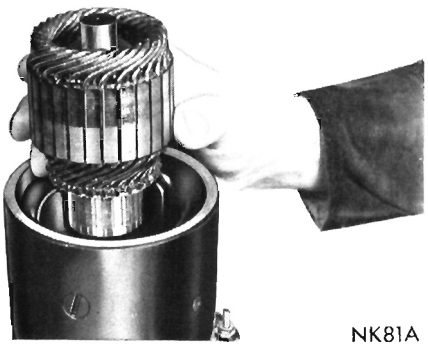

Fig. 24—Installing Starter Armature

press adhesive into the joint. Do not get adhesive on the battery and/or solenoid terminals.

INSTALLING THE STARTER

(1) Before installing the starter, make sure starter and flywheel housing mounting surfaces are free of dirt and oil to insure a good electrical contact.

(2) Position starter to flywheel housing removable seal (if removed).

(3) Install the starter, washer and bolt, the automatic transmission oil cooler tube bracket (if so equipped) and washer and nut. **When tightening attaching bolt and nut be sure to hold the starter pulled away from the engine to insure proper alignment.**

(4) Attach wire at solenoid switch terminal and cable to starter terminal.

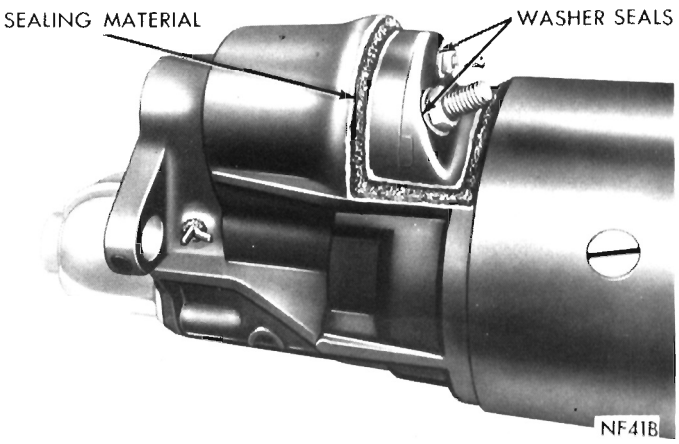

Fig. 25—Sealing Brush Holder Plate

(5) Connect battery ground cable and test operation of the starter for proper engine cranking.

STARTER (Direct Drive)

INDEX

	Page
Adjusting Starter Drive Pinion Clearance	22
Amperage Draw Test	16
Assembling the Starter	21
Brushes and Springs Replacement	19
Cleaning the Starter Parts	19
Disassembling the Starter	18
Free Running Test	17
Installing the Starter	22
Insulated Circuit Test	17
Removing the Starter	17
Replacing Field Coils	21
Service Diagnosis	6
Servicing Bushings	21
Servicing Drive Unit	21
Specifications	100
Starter Ground Circuit Test	17
Starter Resistance Test	16
Testing Armature	20
Testing Field Coils for Ground	20
Testing Starting Motor (Bench Test)	17

SERVICE PROCEDURES

AMPERAGE DRAW TEST (with Starter Tester)

Check battery electrolyte gravity with a reliable hydrometer. Gravity should be not less than 1.220 (temperature corrected). See that battery passes High Rate Discharge Test shown in the "Battery" section of this manual.

Turn Battery—Starter Tester **CONTROL KNOB** to "OFF" position.

Turn voltmeter Selector Switch to 16 Volt position. Connect heavy **Positive** ammeter lead (Red) to **Positive** battery terminal. Connect heavy **Negative** ammeter lead (Black) to **Negative** battery terminal.

Connect **Positive** voltmeter lead (Red) to **Positive** battery terminal. Connect **Negative** voltmeter lead (Black) to **Negative** battery terminal.

DISCONNECT ignition primary lead from ignition ballast resistor, or primary wire from either side of coil, to prevent engine from starting.

Crank engine with a remote control starter switch and observe **Exact** reading on Voltmeter. Stop cranking engine. Without cranking engine, turn tester **CONTROL KNOB** clockwise until voltmeter reads **Exactly** the same as when engine was being cranked with the remote control starter switch. Ammeter now indicates starter amperage draw. Check specifications.

Engine should be up to operating temperature. Extremely heavy oil or a tight engine will increase starter amperage draw.

STARTER RESISTANCE TEST

(1) Test battery electrolyte specific gravity. Specific gravity should be 1.220 or above.

(2) Disconnect positive battery lead from battery terminal post. Connect a 0 to 300 scale ammeter between disconnect lead and battery terminal post.

(3) Connect a test voltmeter with 10 volt scale division between battery positive post and starter switch terminal at starter solenoid.

(4) Crank engine and observe reading on voltmeter and ammeter. The voltage should not exceed .3 volt. A reading of voltage that exceeds .3 volt indicates there is high resistance caused from loose circuit connections, a faulty cable, burned starter relay or solenoid switch contacts. A current that is high and is combined with slow cranking speed, indicates that starter should be removed and repaired.

INSULATED CIRCUIT TEST

(1) Test battery electrolyte specific gravity. Specific gravity should be 1.220 or above.

(2) Turn Voltmeter Selector Switch to 4 volt position.

(3) Disconnect ignition coil secondary cable.

(4) Connect voltmeter positive lead to battery positive post and voltmeter negative lead to solenoid connector which connects to starter field coils. **The voltmeter will read off scale to the right until starter is actuated.**

(5) Connect remote control switch to the battery and solenoid terminal of starter relay.

(6) Crank engine with a remote control starter switch and observe voltmeter reading. Voltmeter reading should not exceed .3 volt. A voltmeter reading of .3 volt or less indicates voltage drop is normal in the cables, starter relay switch, solenoid switch and connections between battery and starter is normal. See "Starter Ground Circuit Test."

If voltmeter reading is more than .3 volt, it indicates high resistance in the starter insulated circuit. Make following tests to isolate point of excessive voltage loss:

(a) Remove the voltmeter lead from the solenoid connector and connect to the following points, repeating test at each connection. Starter terminal of solenoid, battery terminal of solenoid, battery cable terminal at solenoid, starter relay and cable clamp at battery.

(b) A small change will occur each time a normal portion of the circuit is removed from the test. A definite change in voltmeter reading indicates that the last part eliminated in the test is at fault.

Maximum allowable voltage loss is as follows:

Battery insulated cable	.2 volt
Solenoid switch	.1 volt
Each connection	.0 volt

Replace faulty cables. Clean and tighten all connections.

STARTER GROUND CIRCUIT TEST

(1) Connect the voltmeter positive lead to starter housing and negative voltmeter lead to battery negative post.

(2) Crank engine with a remote control starter switch and observe voltmeter reading. Voltmeter reading should not exceed .2 volt. A reading of .2 volt or less indicates voltage loss in ground cable and connections are normal. If voltmeter reading is more than .2 volt, it indicates excessive voltage loss in starter ground circuit. Make the following tests to isolate point of excessive voltage loss, repeating test at each connection.

(a) Starter drive housing.

(b) Cable terminal at engine.

(c) Cable clamp at battery.

A small change will occur each time a normal portion of the circuit is removed from test. A definite change in voltmeter reading indicates the last part eliminated in the test is at fault.

Maximum allowable voltage loss is as follows:

Battery ground cable	.0 volt
Engine ground circuit	.2 volt
Each connection	.1 volt

REMOVING THE STARTER

(1) Disconnect ground cable at battery.

(2) Remove starter cable at starter.

(3) Disconnect solenoid lead wire from solenoid.

(4) Remove bolts attaching starter to flywheel housing and remove starter.

(Bench Test)

FREE RUNNING TEST

(1) Place starter in a vise equipped with soft jaws and connect a fully-charged, 12 volt battery to starter as follows:

(2) Connect a test ammeter (100 amperes scale) and a carbon pile rheostat in series with battery positive post and starter terminal.

(3) Connect voltmeter (15 volt scale) across starter.

(4) Rotate carbon pile to full-resistance position.

(5) Connect battery cable from battery negative post to starter frame.

(6) Adjust rheostat until battery voltage shown on voltmeter reads 11 volts.

(7) Current draw should be 78 amperes maximum at 3800 minimum rpm.

Locked Resistance Test

(1) Install starter in test bench.

(2) Follow instructions of test equipment manufacturer and test the locked-resistance of the starter as follows:

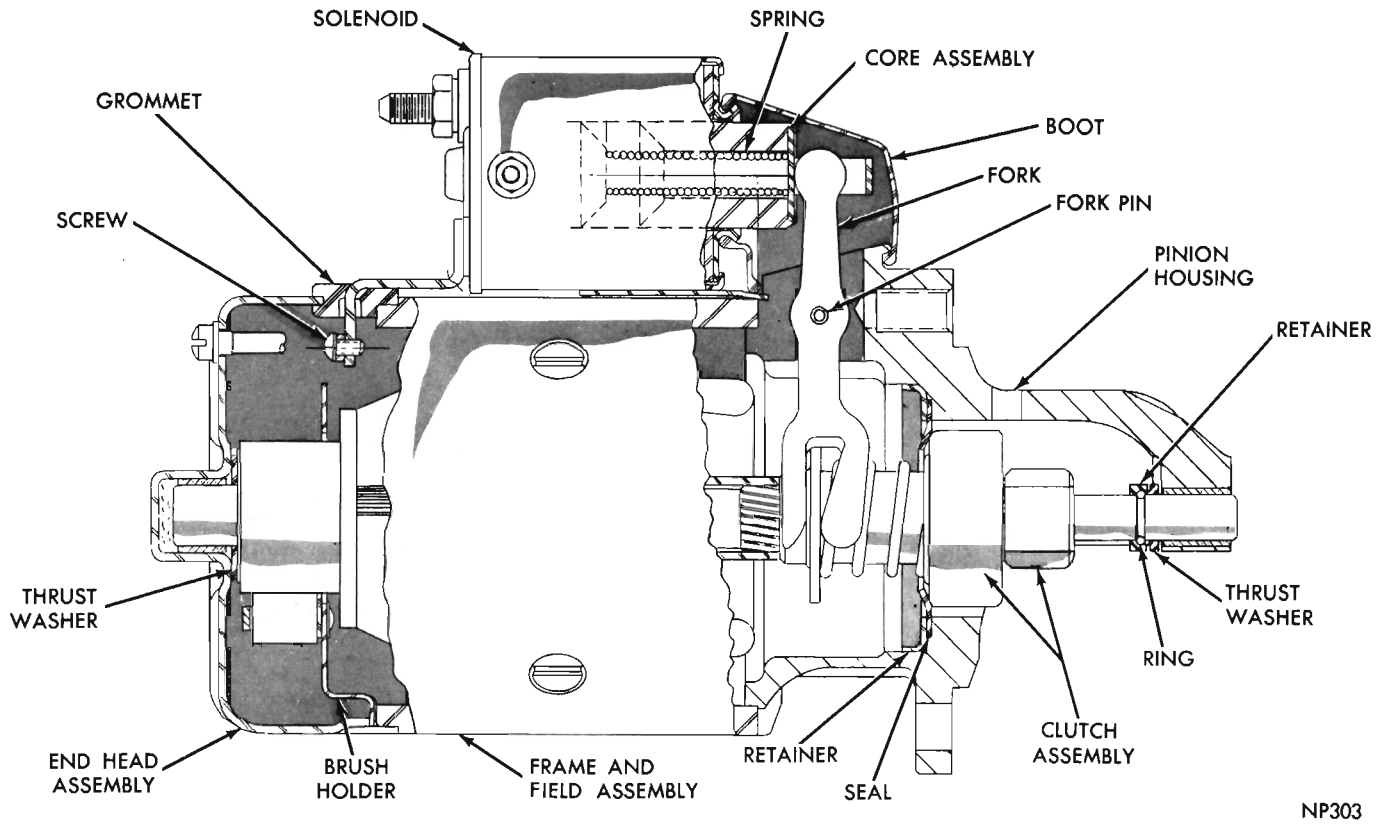

Fig. 1—Starter—Cross Section

With applied battery voltage adjusted to 4 volts; current draw should be as shown in specifications.

DISASSEMBLING THE STARTER

(1) Refer to Figure 1, remove through bolts and tap commutator end head from field frame.

(2) Remove thrust washers from armature shaft.

(3) Lift brush holder springs and remove brushes from brush holders.

(4) Remove brush plate (Fig. 2).

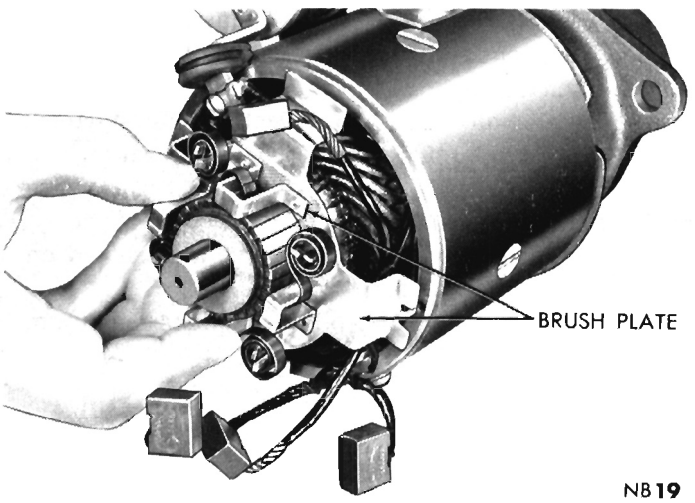

Fig. 2—Removing Brush Ring

(5) Disconnect field coil leads at solenoid connector (Fig. 3).

(6) Remove solenoid attaching screws and remove solenoid and boot assembly (Fig. 4).

(7) Drive out overrunning clutch shift fork pivot pin (Fig. 5).

(8) Remove drive end pinion housing and spacer washer. Replace the pinion housing assembly, if the rubber seal (Fig. 1) is damaged (units so equipped).

(9) Note position of shifter fork on starter drive and remove shifter fork (Fig. 6).

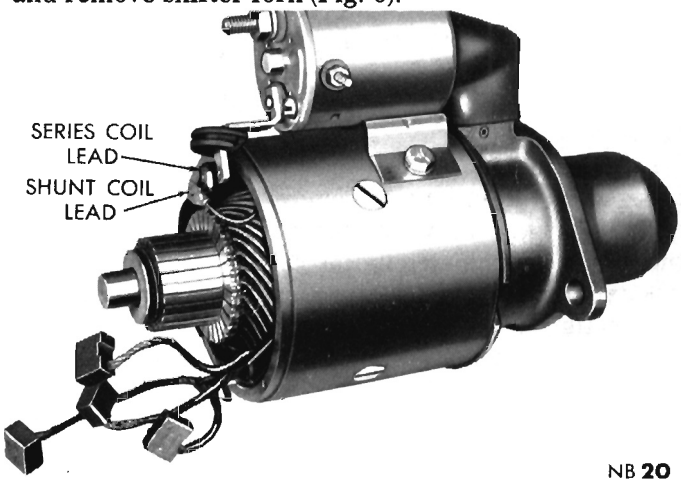

Fig. 3—Field Coil Leads Disconnected from Solenoid Connector

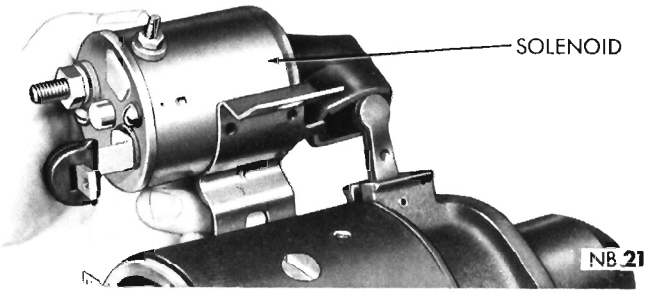

Fig. 4—Removing Starter Solenoid

(10) Slide overrunning clutch pinion gear toward commutator end of armature, drive stop retainer toward clutch pinion gear to expose snap ring and remove snap ring.

(11) Slide overrunning clutch drive from armature shaft.

(12) If it is necessary to replace field coils, remove the ground brushes terminal attaching screw and raise the brushes with terminal and shunt wire up and away from field frame (Fig. 7). Remove pole shoe screws with special pole shoe impact screwdriver, Tool C-3475.

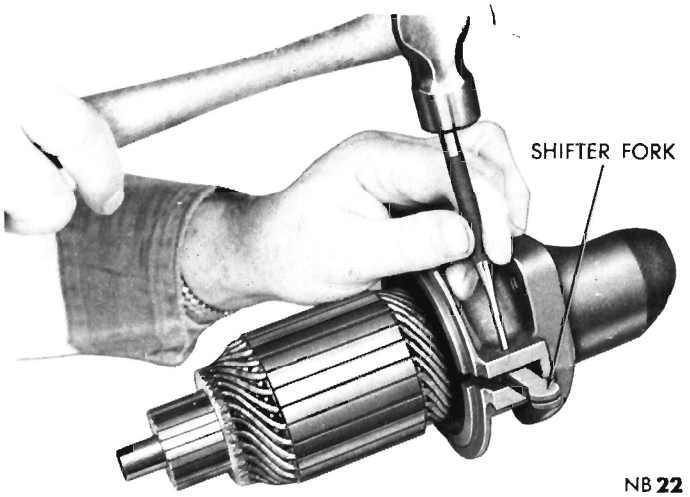

Fig. 5—Removing Shifter Fork Pivot Pin

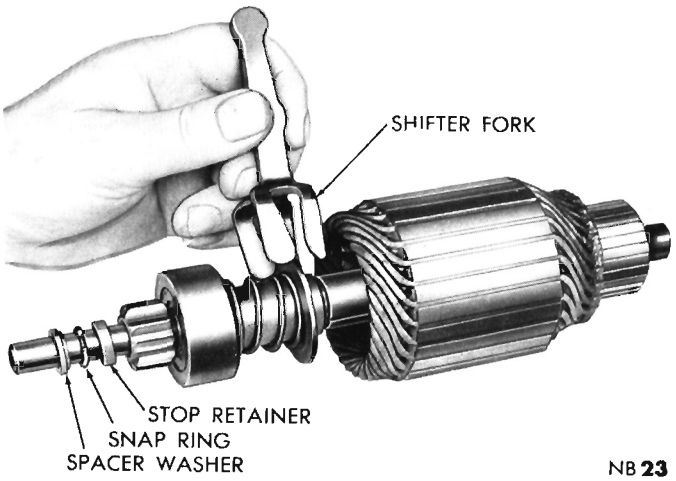

Fig. 6—Removing Shift Fork

CLEANING THE STARTER PARTS

(1) Do not immerse parts in cleaning solvent. Immersing the field frame and coil assembly and/or armature will damage insulation. Wipe these parts with a cloth **only.**

(2) Do not immerse drive unit in cleaning solvent. Drive clutch is pre-lubricated at the factory and solvent will wash lubrication from clutch.

(3) The drive unit may be cleaned with a brush moistened with cleaning solvent and wiped dry with a cloth.

BRUSHES AND SPRINGS—REPLACEMENT

(1) Brushes that are worn more than 1/2 the length of new brush, or are oil-soaked, should be replaced. Brushes and springs can be replaced after removing commutator end head and brush plate.

(2) Disengage brushes from brush holders and remove brush plate.

(3) Disconnect series coil and shunt field coil terminal at solenoid connector (Fig. 3).

(4) Remove ground brush terminal screw and carefully remove ground brush set to prevent breaking shunt field lead.

(5) Remove shunt field from old brush set to ensure as much length as possible.

(6) Remove field terminal plastic covering and remove old brushes. Use side cutters to break the weld by rolling the stranded wire off the terminal.

(7) Drill a .174 to .184 inch hole in the series coil terminal 3/16 of an inch from top of terminal to centerline of hole (Fig. 7). (Use a number 16 drill.)

CAUTION: Do not damage the field coil during the drilling operation.

(8) Attach insulated brush set to series field termi-

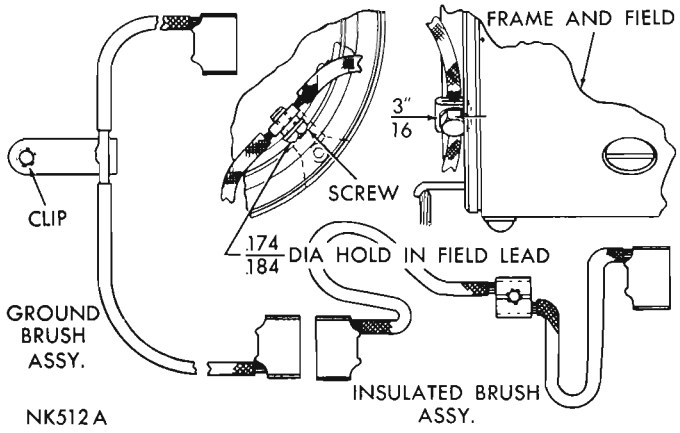

Fig. 7—Brush Replacement

nal with flat washer and number 8 self-tapping screw.

(9) Attach shunt field lead to new ground brush set by making a loop around the terminal and soldering lead to the terminal with resin core solder.

(10) Attach ground brush terminal to field frame with attaching screw. Fold surplus shunt field lead back along the brush lead and secure with rubber insulating tape.

(11) Measure brush spring tension with a spring scale hooked under spring near brush end. Pull scale on a line parallel to edge of brush and take a reading just as spring end leaves the brush. Spring tension should be 32 to 36 ounces. Replace springs that do not meet specifications.

(12) Brush springs can be removed by spreading the retainers and disengaging the springs from retainer legs.

TESTING THE ARMATURE

Testing Armature for Short Circuit

Place armature in a growler (Fig. 8) and hold a thin steel blade parallel to the core and just above it while slowly rotating armature in growler. A shorted armature will cause blade to vibrate and be attracted to the core. Replace shorted armature.

Testing Armature for Ground

Touch armature shaft and the end of each commutator bar with a pair of test lamp prods (Fig. 9). If lamp lights, it indicates a grounded armature. Replace grounded armature.

Testing Commutator Runout, Refacing

Place armature in a pair of "V" blocks and check runout with a dial indicator. Check both shaft and commutator. A bent shaft requires replacement of armature.

When commutator runout exceeds .003 inch, commutator should be refaced. Remove only a sufficient amount of metal to provide a smooth, even surface.

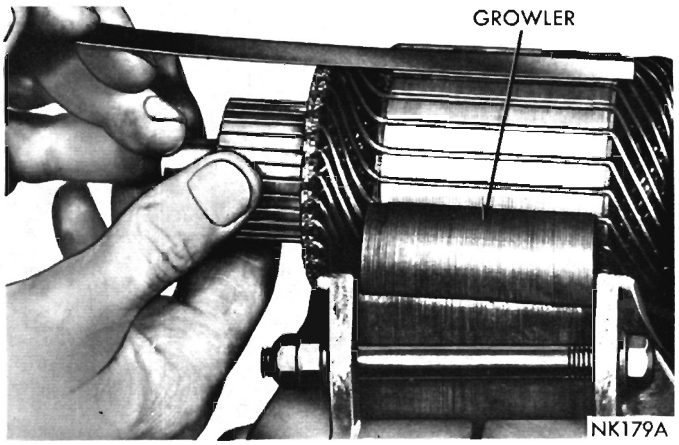

Fig. 8—Testing Armature for Short

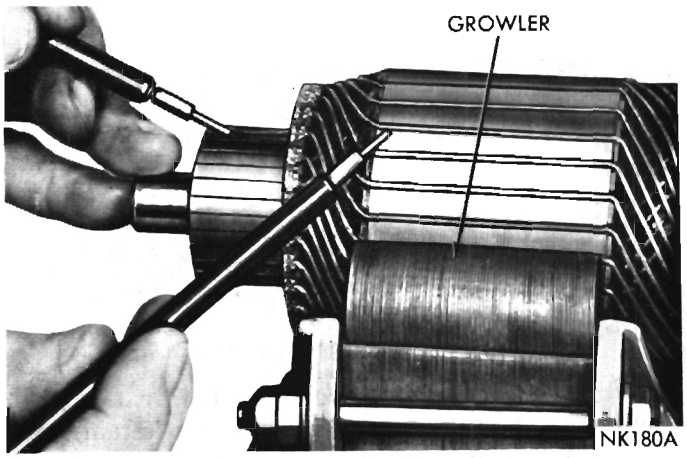

Fig. 9—Testing Armature for Ground

TESTING FIELD COILS FOR GROUND

(1) Remove through bolts and commutator end frame.

(2) Remove brushes from brush holders and remove brush plate (Fig. 2).

(3) Disconnect field lead wires at solenoid connector and separate field leads to make sure they do not touch solenoid connector (Fig. 3).

(4) Remove ground brushes attaching screw, and raise brushes with terminal and shunt wire up and away from field frame.

(5) Touch one probe of test lamp to series field coil lead and other probe to field frame (Fig. 10). Lamp should not light.

(6) Touch one probe to shunt field coil lead and other probe to field frame (Fig. 11).

If lamp lights in either test (5) or (6), field coils are grounded. If field coils are grounded, test each coil separately after unsoldering connector wires. Replace grounded field coils.

(7) Touch each of the brush holders with one test

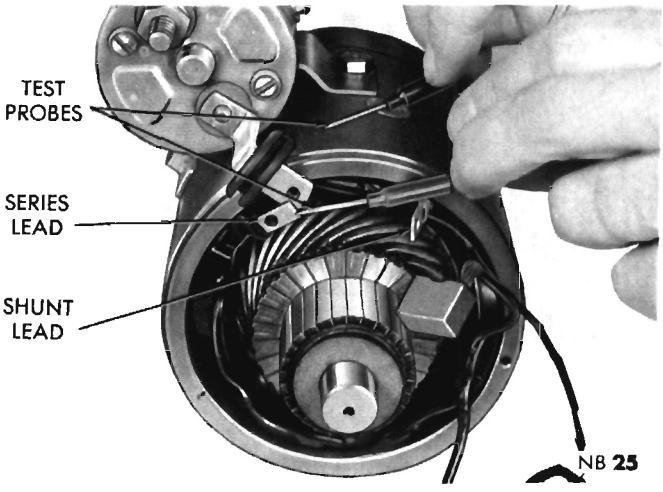

Fig. 10—Testing Series Coil for Ground

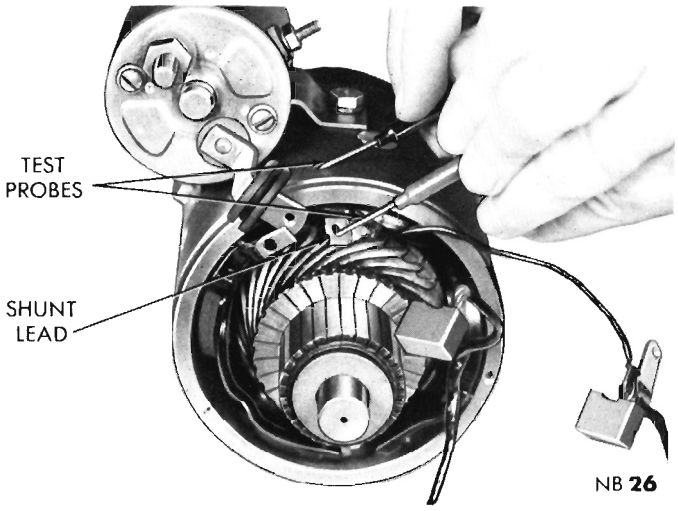

Fig. 11—Testing Shunt Coil for Ground

probe, while holding other test probe against brush ring. Two brush holders that are 180 degrees apart should cause test lamp to light as they are intentionally grounded. The other two brush holders (Fig. 12) should not cause lamp to light when tested as they are insulated. If insulated brush holders cause lamp to light when tested, it indicates that brush holders on brush ring are grounded. Replace brush ring assembly if brush holders are grounded.

REPLACING FIELD COILS

A pole shoe impact screwdriver Tool C-3475 should be used to remove and install field coils to prevent damage to the pole shoe screws and for proper tightening.

Pole shoes that are loose and not properly seated may cause armature core to rub on pole shoes. This will decrease starter efficiency and damage armature core. **Scribe a mark in the pole shoe and field frame to ensure pole shoes are assembled in their original position.**

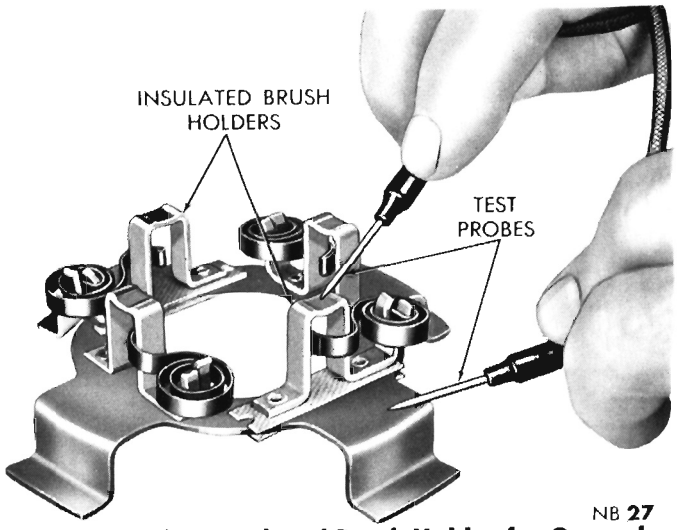

Fig. 12—Testing Insulated Brush Holder for Ground

SERVICING BUSHINGS

Inspect armature shaft bearing surfaces and bushings for wear by placing armature core in a vise equipped with soft jaws. Do not squeeze tightly. Try the commutator end frame, drive end frame, and armature support bushings for wear by placing them on shafts and checking for side play. Replace commutator end frame and bushing assembly if bushing is worn. Replace drive end bushing if worn. The bushing should be well soaked in SAE 30 engine oil before it is installed. New pre-sized bushings should be pressed into the housing until bushing is flush with inner side of housing to provide proper clearance. Use Tool C-3944 to remove and install bushing.

SERVICING THE DRIVE UNIT

Place drive unit on armature shaft and, while holding armature, rotate the pinion. Drive pinion should rotate smoothly in one direction (not necessarily easily), but should not rotate in opposite direction. If drive unit does not function properly, or if pinion is worn or burred, replace drive unit.

ASSEMBLING THE STARTER (Refer to Figs, 1 and 13)

(1) Lubricate armature shaft and splines with SAE 10-W oil or SAE 30 rust preventative oil.

(2) Install starter drive, stop collar (retainer), lock ring and spacer washer.

(3) Install shifter fork over starter drive spring retainer washer with narrow leg of fork toward the commutator (Fig. 6). This is important, if the fork is not properly positioned starter gear travel will be restricted causing a lockup in the clutch mechanism.

(4) Install drive end (pinion) housing on armature shaft, indexing shifting fork with slot in drive end housing.

(5) Install shifter fork pivot pin (Fig. 5).

(6) With clutch drive, shifter fork, and pinion housing assembled to the armature, slide armature into field frame until pinion housing indexes with slot in field frame.

(7) Install solenoid and boot assembly (Fig. 4). Tighten bolts to 60-70 inch-pounds.

(8) Connect field coil leads at solenoid connector (Fig. 3). **Be sure terminals do not touch field frame.**

(9) Install brush holder plate (Fig. 2) indexing tang of ring in hole of field frame.

(10) Position brushes in brush holders. Be sure field coil lead wires are properly enclosed behind

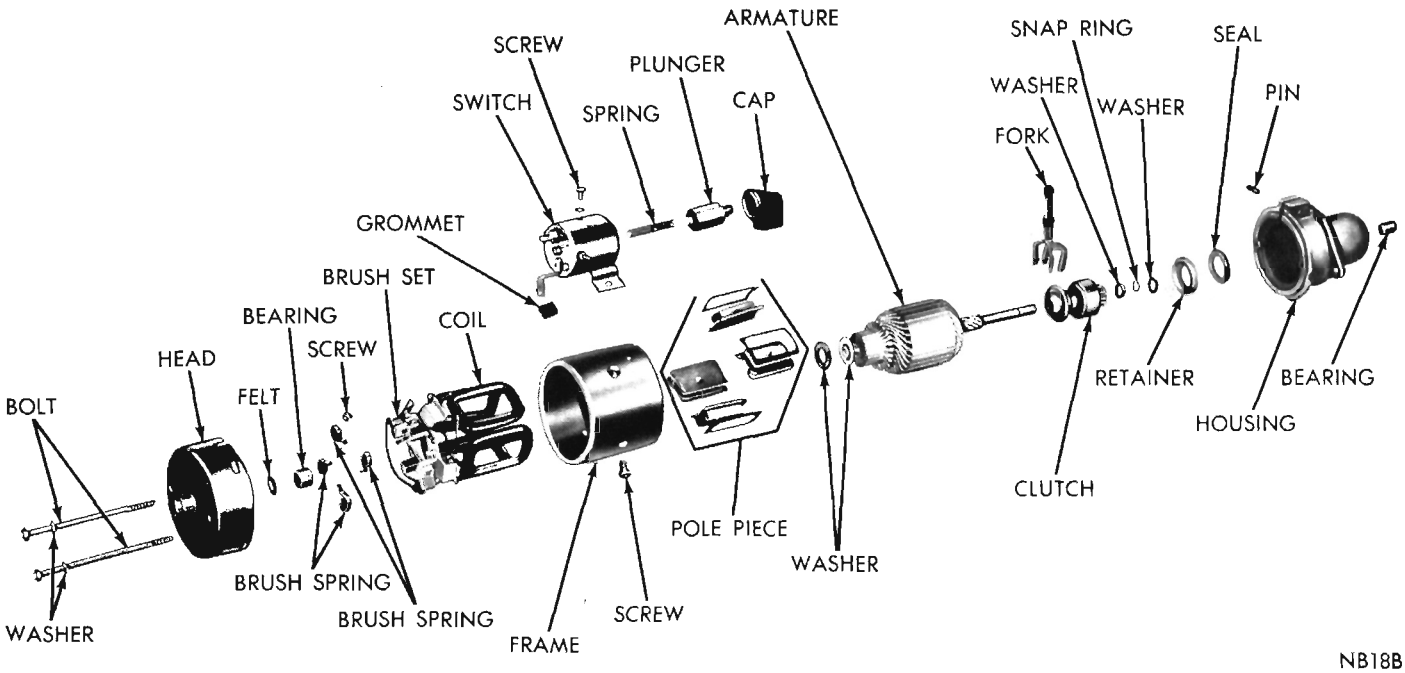

Fig. 13—Starter—Disassembled View

brush holder ring and do not interfere with brush operation.

(11) Install thrust washers on commutator end of armature shaft to obtain .010 inch minimum end play.

(12) Install commutator end head.

(13) Install through bolts and tighten to 40 to 50 inch-pounds.

ADJUSTING STARTER DRIVE GEAR (PINION) CLEARANCE

(1) Place starter assembly in a vise equipped with soft jaws and tighten vise sufficiently to hold starter.

Place a wedge or screwdriver between bottom of solenoid and starter frame to eliminate all deflection in the solenoid when making the pinion clearance test.

(2) Push in on solenoid plunger cage (Fig. 14) (NOT THE FORK LEVER) until plunger bottoms.

(3) Measure clearance between end of pinion and pin stop with plunger seated and pinion pushed toward the commutator end. Clearance should be 1/8 inch. Adjust for proper clearance by loosening solenoid attaching screws and move solenoid fore and aft as required.

(4) Test starter operation under a "Free Running Test."

INSTALLING THE STARTER

(1) Before installing the starter, be sure starter and flywheel housing mounting surfaces are free of dirt and oil. These surfaces must be clean to make good electrical contact.

(2) Position starter to flywheel housing removable seal (if removed).

(3) Install starter from beneath the engine.

(4) Tighten attaching bolts securely.

(5) Attach the wires to solenoid switch and starter terminal.

(6) Install battery ground cable and test operation of starter for proper engine cranking.

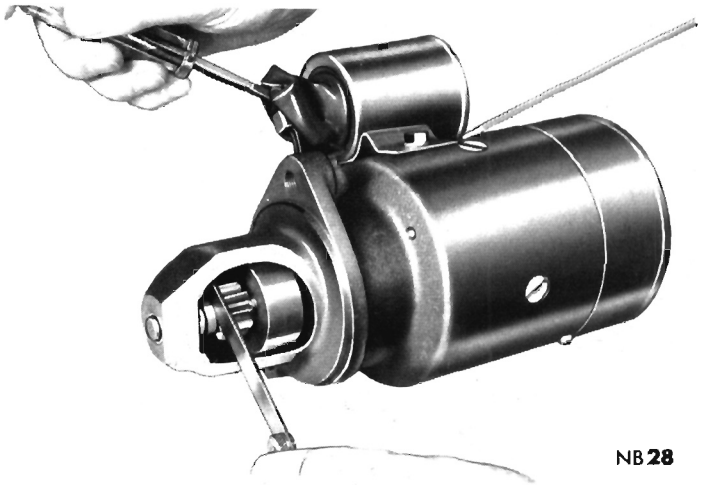

Fig. 14—Checking Starter Drive Pinion Clearance

ALTERNATOR AND ELECTRO-MECHANICAL VOLTAGE REGULATOR

INDEX

	Page		Page
Assembling the Alternator	36	Regulator Testing	30
Bench Tests	31	Replacing Slip Rings	35
Disassembling the Alternator	31	Service Diagnosis	23
Fusible Wire Replacement	29	Specifications	101
General Information	23	Testing the Alternator Circuit	24
Rectifier (Diode) Testing	32	Voltage Regulator	28

GENERAL INFORMATION

The alternator (Figs. 1 and 2) is fundamentally an A.C. current generator, with six (6) built-in silicon rectifiers, that convert A.C. current into D.C. current. D.C. current is available at the "output" "BAT" terminal.

The main components of the alternator are the rotor, stator, rectifiers, the end shields and the drive pulley.

SERVICE DIAGNOSIS

Condition	Possible Cause	Correction
ALTERNATOR FAILS TO CHARGE (No Output)	(a) Blown fusible wire in voltage regulator.	(a) Locate and correct cause of the fuse blowing. Install new fuse wire. Solder both ends of new fusible wire securely.
	(b) Alternator drive belt loose.	(b) Adjust drive belt to specifications.
	(c) Worn brushes and/or slip rings.	(c) Install new brushes and/or slip rings.
	(d) Sticking brushes.	(d) Clean slip rings and brush holders. Install new brushes if necessary.
	(e) Open field circuit.	(e) Test all the field circuit connections, and correct as required.
	(f) Open charging circuit.	(f) Inspect all connections in charging circuit, and correct as required.
	(g) Open circuit in stator windings.	(g) Remove alternator and disassemble. Test stator windings. Install new stator if necessary.
	(h) Open rectifiers.	(h) Remove alternator and disassemble. Test the rectifiers. Install new rectifiers if necessary.
LOW, UNSTEADY CHARGING RATE	(a) Alternator drive belt loose.	(a) Adjust alternator drive belt.
	(b) High resistance at battery terminals.	(b) Clean and tighten battery terminals.
	(c) High resistance in charging circuit.	(c) Test charging circuit resistance. Correct as required.
	(d) High resistance in body to engine ground lead.	(d) Tighten ground lead connections. Install new ground lead if necessary.
	(e) Open stator winding.	(e) Remove and disassemble alternator. Test stator windings. Install new stator if necessary.
LOW OUTPUT AND A LOW BATTERY	(a) High resistance in charging circuit.	(a) Test charging circuit resistance and correct as required.
	(b) Low regulator setting.	(b) Reset voltage regulator to specifications.
	(c) Shorted rectifier. Open rectifier.	(c) Perform current output test. Test the rectifiers and install new rectifiers as required. Remove and disassemble the alternator.
	(d) Grounded stator windings.	(d) Remove and disassemble alternator. Test stator windings. Install new stator if necessary.

Condition	Possible Cause	Correction
EXCESSIVE CHARGING RATE TO A FULLY CHARGED BATTERY	(a) Regulator set too high.	(a) Reset voltage regulator to specifications.
	(b) Regulator contacts stuck.	(b) Install new voltage regulator.
	(c) Regulator voltage winding open.	(c) Install new voltage regulator.
	(d) Regulator base improperly grounded.	(d) Connect regulator base to a good ground.
REGULATOR CONTACTS BURNED	(a) High regulator setting.	(a) Reset voltage regulator to specifications.
	(b) Shorted rotor field coil windings.	(b) Test rotor field coil current draw. If excessive install new rotor.
REGULATOR CONTACT POINTS STUCK	(a) Poor ground connection between alternator and regulator. Open resistor element.	(a) Correct ground connection. Install new regulator. Test regulator setting, and reset if necessary.
NOISY ALTERNATOR	(a) Alternator mounting loose.	(a) Properly install and tighten alternator mounting.
	(b) Worn or frayed drive belt.	(b) Install a new drive belt and adjust to specifications.
	(c) Worn bearings.	(c) Remove and disassemble alternator. Install new bearing as required.
	(d) Interference between rotor fan and stator leads or rectifiers.	(d) Remove and disassemble alternator. Correct interference as required.
	(e) Rotor or rotor fan damaged.	(e) Remove and disassemble alternator. Install new rotor.
	(f) Open or shorted rectifier.	(f) Remove and disassemble alternator. Test rectifiers. Install new rectifiers as required.
	(g) Open or shorted winding in stator.	(g) Remove and disassemble alternator. Test stator windings. Install new stator if necessary.
EXCESSIVE AMMETER FLUCTUATION	(a) High resistance in the field circuit to the alternator or an improperly set voltage regulator.	(a) Clean and tighten all connections as necessary. Adjust voltage regulator as necessary.

SERVICE PROCEDURES

TESTING THE ALTERNATOR SYSTEM (On Vehicle)

Field Circuit Resistance Test (Fig. 3)

(1) Disconnect the ignition wire at the coil side of the ballast resistor and connect the positive lead of a test D.C. voltmeter to the battery positive post and connect the test voltmeter negative lead to the voltage regulator "FLD" (field) terminal; no other lights or accessories on.

(2) Turn the ignition switch on and turn the voltmeter selector switch to the low voltage scale and read the meter. The voltage should not exceed .55 volt. A reading in excess of .55 volt indicates high resistance in the field circuit between the battery and the voltage regulator field terminal.

(3) If high resistance is indicated, move the negative voltmeter lead to each connection along the circuit towards the battery. A sudden drop in voltage indicates a loose or corroded connection between that point and the last point tested. To test the terminal's for tightness, attempt to move the terminal while observing the voltmeter. Any movement of the meter pointer indicates looseness.

Excessive resistance in the regulator wiring circuit will cause fluctuation in the ammeter.

(4) Turn the ignition switch off, disconnect test instrument and reconnect ignition primary wire at the coil side of the ballast resistor.

Charging Circuit Resistance Test

Test the condition of the battery and state of charge. With the battery in good condition and fully charged, proceed with the tests as follows:

Disconnect the battery ground cable at the battery negative post to avoid accidental shorting of the charging or field circuit when making test connections.

(1) Disconnect the lead at the alternator "BATT" terminal. Connect a 0-50 ampere scale D.C. ammeter in series between the "BATT" terminal and "BATT" lead which was disconnected from the terminal (Fig. 4).

(2) Connect the positive lead of a test D.C. voltmeter to the "BATT" lead, and connect the negative voltmeter lead to the battery positive (+) terminal.

(3) Disconnect the field lead at the alternator "FLD" (field) terminal and the ignition lead at the

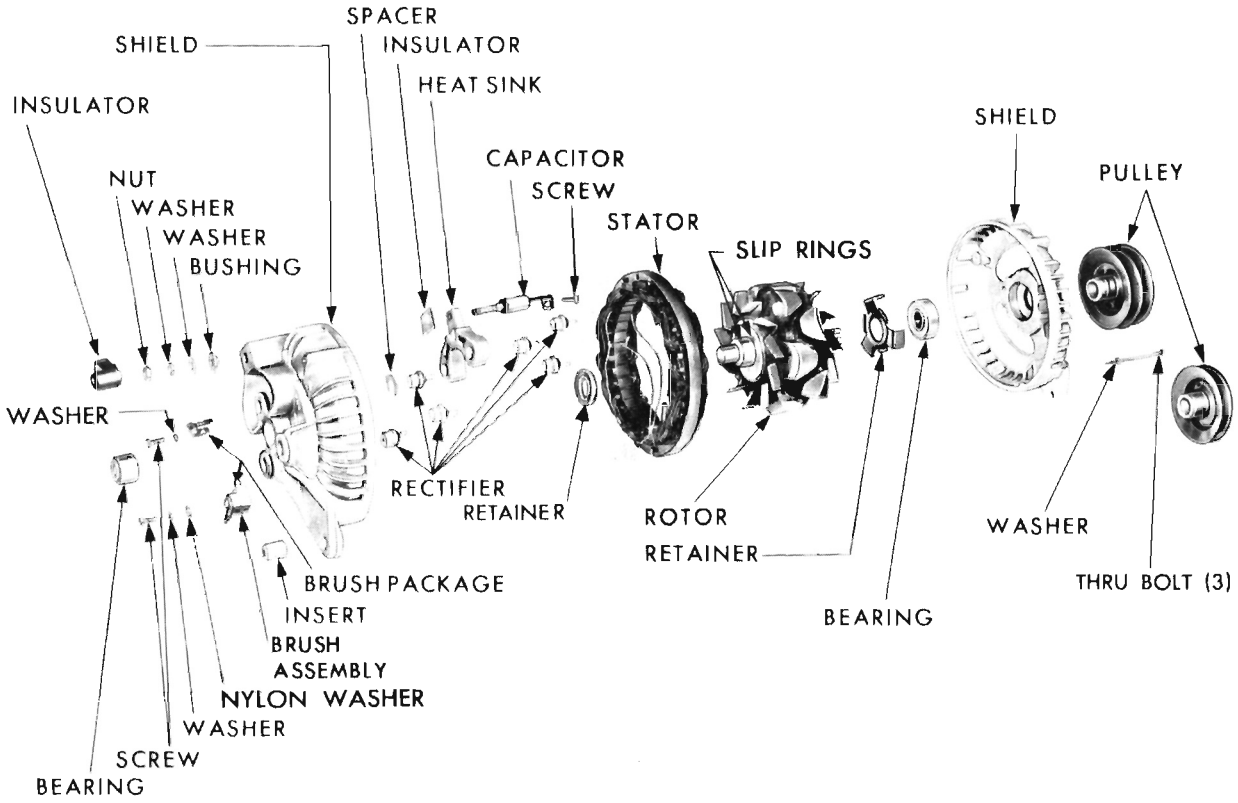

Fig. 1—Alternator (Disassembled View)

regulator "ignition" terminal. Connect a special jumper between the alternator "FLD" (field) terminal and the alternator "BATT" (Battery) terminal. This will ensure that there will be no interference from the voltage regulator.

(4) Reconnect the battery ground cable at the battery negative terminal.

(5) Connect a variable carbon pile to the battery terminals.

(6) Start and operate the engine at a speed to obtain 10 amperes flowing in the circuit. Observe the voltmeter reading. The voltmeter reading should not exceed .3 volt. If a higher voltage drop is indicated, inspect, clean and tighten all the connections in the charging circuit. A voltage drop test may be performed at each connection to locate the connection with excessive resistance.

(7) Turn ignition switch off. Disconnect the battery ground cable at the battery negative terminal. Disconnect the test instrument. Connect the "BATT" lead to the alternator "BATT" terminal and tighten

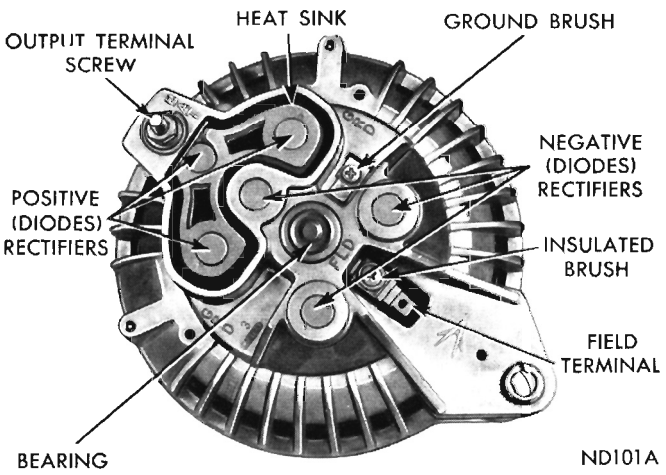

Fig. 2—Alternator Assembly

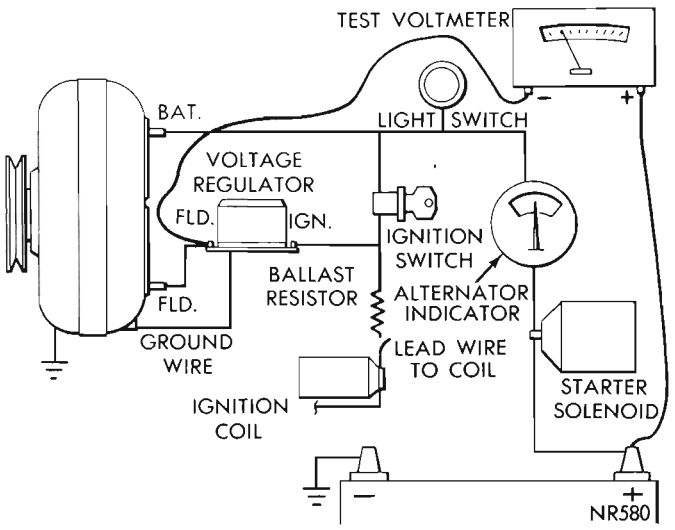

Fig. 3—Field Circuit Resistance Test

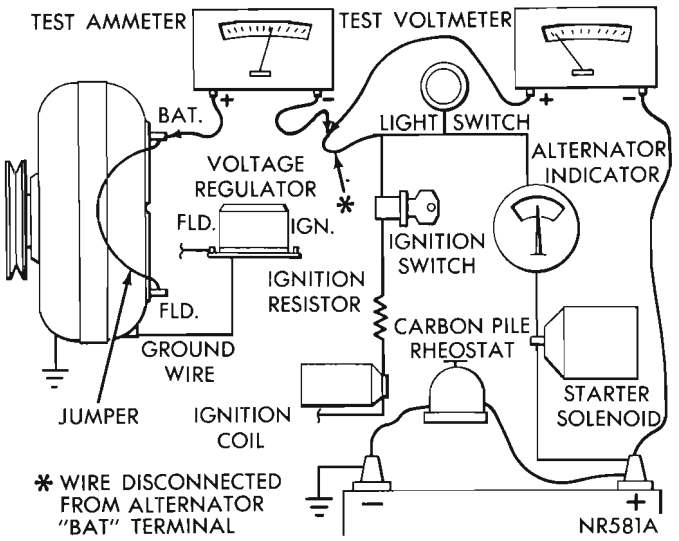

Fig. 4—Charging Circuit Resistance Test

securely. Connect the ignition lead at the regulator "ignition" terminal connect battery ground cable at battery negative terminal.

Current Output Test (Fig. 5)

(1) Disconnect the battery ground cable.

(2) Disconnect the "BATT" lead at the alternator output "BATT" terminal.

(3) Connect a 0-50 ampere scale D.C. ammeter in series between the alternator "BATT" terminal and the disconnected "BATT" lead.

(4) Connect the positive lead of a test voltmeter to the output "BATT" lead. Connect the negative lead of the test voltmeter to ground.

(5) Disconnect the field "FLD" lead at the alternator, and the ignition lead at the regulator ignition terminal.

(6) Connect a "jumper" lead from the alternator field "FLD" terminal to the alternator output "BATT" terminal. Be sure the ammeter lead is satisfactorily connected to the output "BATT" terminal.

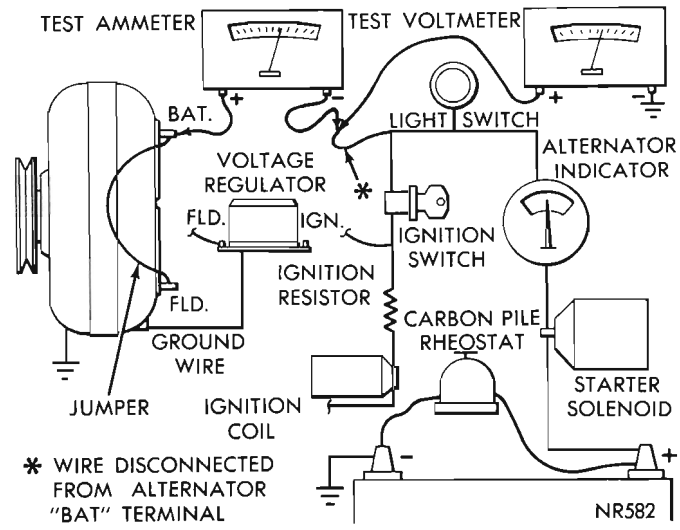

Fig. 5—Current Output Test

(7) Connect an engine tachometer. Connect the battery ground cable.

(8) Connect a variable carbon pile to the battery terminals.

(9) Start and operate engine at idle.

CAUTION: Immediately after starting reduce engine speed to idle.

(10) Adjust the carbon pile and engine speed in increments until a speed of 1250 RPM and a voltmeter reading of 15 volts is obtained.

CAUTION: Incremental increases in engine speed should not be large enough to allow voltage to go above 16 volts.

(11) Observe the reading on the test ammeter. The current output should be within the limits shown in "Specifications".

If the output is slightly less (5 to 7 amperes) than that specified above, it may be an indication of possible "open" rectifier or other alternator internal problem. If the output is considerably lower than that specified above, it may be an indication of a possible "shorted" rectifier or other alternator internal problem. In either case the alternator should be removed and tested on the bench before disassembly.

Reduce engine speed then turn off carbon pile immediately after observing the reading on the test ammeter.

If the alternator current output tested satisfactorily, turn off ignition switch.

(12) Disconnect battery ground cable.

(13) Remove test ammeter and voltmeter.

(14) Remove jumper between alternator field "Terminal" and "Output" Terminal. Connect the field wire to the alternator field terminal and the ignition lead to the regulator ignition terminal.

(15) Connect the battery ground cable.

Voltage Regulator Test (On the Vehicle)—Engine at Normal Operation Temperature (Fig. 6).

Upper Contacts

(1) With the ignition switch turned off. disconnect wire at ignition side of voltage regulator and install on-off switch and wire in series with voltage regulator and the wire disconnected from voltage regulator (Fig. 6). The on-off switch and wire assembly can be made up as shown in Figure 7.

(2) Connect positive lead of the test voltmeter to test harness terminal of switch and negative lead of test voltmeter to a good body ground.

(3) Disconnect the "BATT" lead at the alternator (output) "BATT" terminal.

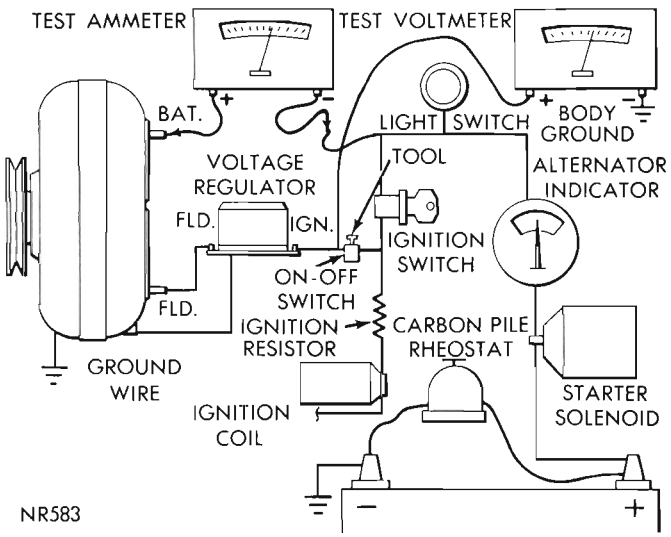

Fig. 6—Voltage Regulator Test

(4) Connect an 0-50 ampere scale D.C. ammeter in series between the alternator "BATT" terminal and the disconnected "BATT" lead.

CAUTION: If the field circuit is grounded on the field terminal side of the regulator circuit when removing or installing the lead, while the ignition is ON, the fuse wire in the regulator circuit will be blown and the regulator may be damaged.

(5) Start and operate the engine at 1250 rpm. Adjust carbon pile or turn on lights and/or accessories to obtain a 15 ampere output as registered on the test ammeter. No current reading on test ammeter would indicate either a low set regulator or a blown fuse wire inside the voltage regulator between the upper stationary contact and the "IGN" terminal. Correct the cause and replace the fusible wire. Operate the engine at this speed and load for 15 minutes to make sure the entire system is temperature normalized then proceed with the test as follows:

(a) Re-adjust engine speed to 1250 RPM.

(b) Adjust carbon pile or adjust the lights and/or accessory load to maintain 15 amperes, as registered on the test ammeter.

(c) Measure and record the temperature at the regulator by holding a reliable thermometer 1/4 inch from the regulator cover.

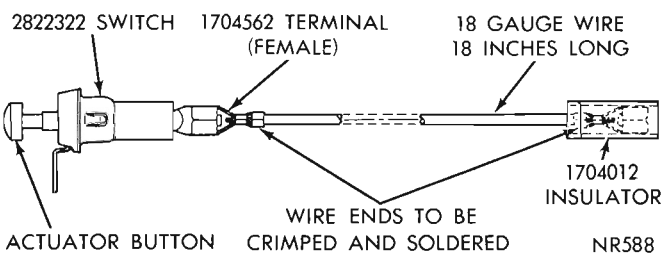

Fig. 7—Voltage Regulator ON-OFF Switch and Wire Assembly

(6) Flash the voltage regulator circuit by momentarily opening and closing the on-off switch several times (which is in series with the voltage regulator).

(7) Observe test voltmeter. Voltmeter now indicates setting of the voltage regulator upper contacts. See "Specifications".

(8) If regulator operates within specifications, proceed to lower contact voltage test. If upper contact voltage setting is not within specification, remove regulator cover and adjust voltage setting as outlined in "Regulator Adjustments", step number (1).

Lower Contact Test

(1) Increase engine speed to 2200 R.P.M.

(2) Turn off all lights and/or accessories, or vary the carbon pile to decrease the current load to 7 amperes output as registered on the test ammeter. The voltage should increase and amperage should decrease.

(3) Again measure the temperature at the regulator to make sure it is the same as it was for the upper contacts test.

(4) Flash the voltage regulator circuit by opening and closing the on-off switch several times which is in series with the voltage regulator.

(5) Read the test voltmeter and note the exact amount that voltage has increased from the voltage reading obtained with the regulator operating on the upper contacts. The voltage increase should not be less than .2 volt or more than .7 volt. If the voltage increase is not within these limits, it is an indication that the air gap and/or contact clearance is out of specification limits and requires adjustment, refer to "Regulator Mechanical Adjustments."

There will be a slightly higher voltage at higher engine speeds above 2200 rpm, however, this increased voltage must not exceed the voltage specified by more than .7 volt at any temperature range. If the voltage reading is less than .2 volt from readings in Step (4) under "Upper Contact Test", test the battery specific gravity to be sure battery is fully charged.

(6) Upon completion of test, reduce engine speed to idle, stop engine, **disconnect battery** and disconnect all test leads and adapters. Be sure that all vehicle's cables and wiring connections are secure before restarting engine.

CAUTION: Be sure the negative post of the battery is always connected to ground. Incorrect battery polarity may result in wiring harness damage and may damage the alternator rectifiers. Do not ground the alternator field circuit, as this may damage the regulator.

VOLTAGE REGULATOR

(CHRYSLER BUILT)

GENERAL INFORMATION

The only function of the regulator is to limit the output voltage. The voltage regulator accomplishes this by controlling the flow of current in the rotor field coil, and in effect controls the strength of the rotor magnetic field.

The voltage regulator is connected in the field circuit between the battery and the field terminal of the alternator. One terminal of the regulator is marked "IGN" and the other is marked "FLD." The "IGN" terminal of the regulator is connected to the coil side of the ignition switch so that the field circuit is completed **only** when the ignition switch is turned "ON."

The voltage regulator (Fig. 8) has two sets of contacts using a common single armature. The upper and lower stationary contact brackets are mounted on a molded plastic bracket which is attached to the regulator frame by a screw. (Fig. 9.) The upper contact bracket is connected to the "IGN" terminal by a fusible wire. The lower contact bracket is connected to ground by another fusible wire. The armature is connected to the insulated "FLD" terminal.

Three resistance units are used (Fig. 10).

Two resistors are connected between the "IGN" and "FLD" terminals, in parallel with the upper set of contacts. One resistor is connected between "FLD" terminal and ground. Its function is to reduce arcing at regulator contacts.

A voltage coil, (Fig. 8) consisting of many turns of fine wire, is connected in series between the "IGN" terminal of the regulator and "ground." Thus, when the ignition switch is turned "ON" battery voltage applied to the windings energizes the coil and the magnetic force of the coil tends to attract the regulator armature.

When battery line voltage is relatively low, current flow through the voltage coil will be low. The magnetic force (or pull) of the voltage coil will not be great enough to overcome the regulator armature spring tension, which is holding the armature contact against the upper stationary contact, (Fig. 8).

Battery line voltage applied to the "IGN" terminal causes current to flow through the regulator upper contacts, through the "FLD" terminal of the regulator and to the "insulated" brush and rotor slip ring. The rotor field coil circuit is completed to ground through the other rotor slip ring and the ground brush. Inasmuch as the upper contacts are "closed," the field circuit resistance is low, and maximum current will flow through the rotor field coil. The rotor field strength will be high, and the alternator output will be at its maximum for any rotor speed.

As the battery line voltage increases, the magnetic pull of the voltage coil overcomes the armature spring tension, and "opens" the upper contacts. The armature contacts at this time do not touch either the upper or lower stationary contacts. Field current now flows through the regulator "IGN" terminal, through the two parallel resistors, through the "FLD" terminal, and through the rotor field to ground.

The two resistors, in series with the field circuit, reduce field current and rotor field strength, with a corresponding reduction in alternator output voltage. This momentarily reduces battery line voltage applied to the regulator voltage coil. The regulator armature spring tension overcomes the magnetic pull of the voltage coil, closing the upper contacts.

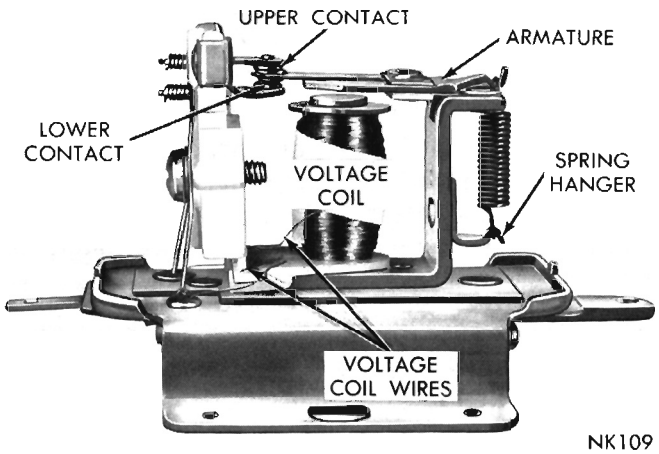

Fig. 8—Voltage Regulator (Cover Removed)

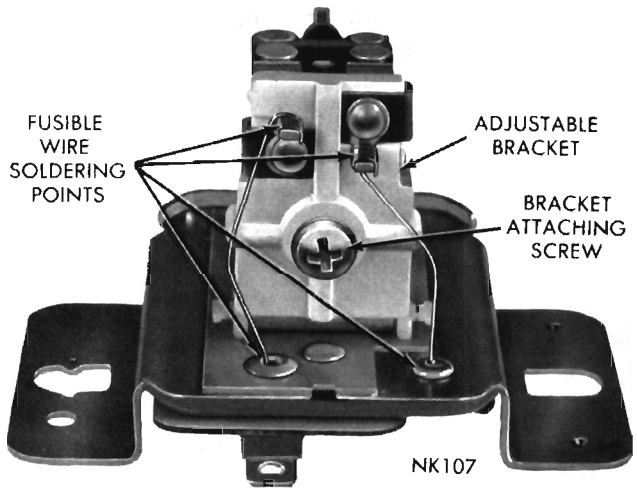

Fig. 9—Voltage Regulator Fusible Wires

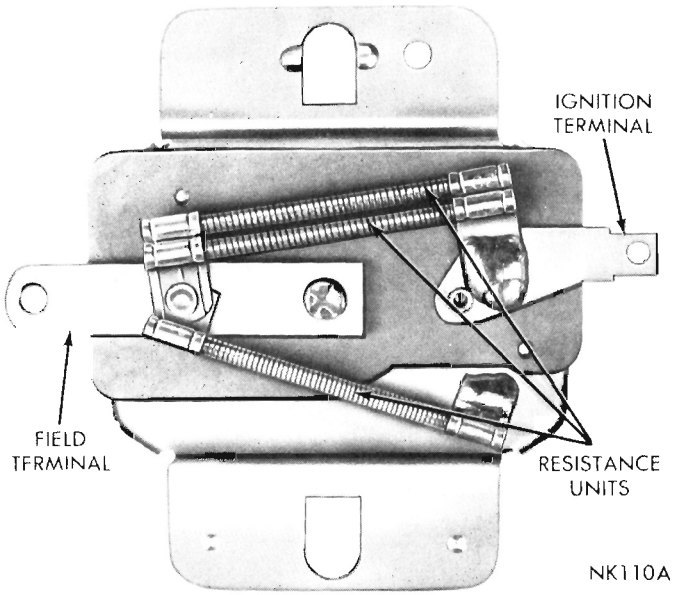

Fig. 10—Voltage Regulator Resistance Units

When the electrical load requirements are relatively high, the regulator armature oscillates, opening and closing the upper contacts. This alternately "puts in" and "takes out" resistance in the field circuit, and in effect limits the alternator output voltage.

When the electrical load requirements are low and the engine speed is high, the alternator output voltage tends to increase. The battery line voltage (now slightly increased) causes the regulator voltage coil magnetic force to pull the armature contact against the regulator lower stationary contact.

Field current flow is now through the regulator "IGN" terminal, through the two parallel resistors to the regulator "FLD" terminal. Since the regulator armature is connected to the "FLD" terminal and the lower contacts are closed, the current path is through the regulator armature to the movable contact and then through the lower contact to ground. This is because the resistance to ground is less than the alternator rotor field coil resistance.

By-passing the alternator field coil will cause the alternator output voltage and the battery line voltage to drop. This reduction in voltage will reduce the magnetic pull of the regulator voltage coil, to the extent that it cannot hold the armature contact against the stationary lower contact.

The armature moves into a "no contact" position between the upper and lower stationary contacts. This momentarily allows the field current to flow through the two parallel resistors and through the rotor field coil to ground. At high engine speed and low electrical load operation, the armature oscillates between the "no contact" position, and contact with the lower stationary contact, to limit battery line voltage.

SERVICE PROCEDURES

Adjusting the Voltage Setting to Driving Conditions

Specifications called for in the voltage regulator chart indicate a tolerance of one volt from the low setting to high setting at temperatures indicated for the upper contact setting.

To maintain battery in a full state of charge, the voltage regulator should be adjusted to provide proper voltage limiting setting according to customer's driving and load requirement habits as follows:

(a) Check entire charging system and battery as outlined in this Service Manual.

(b) If there are no defects in the charging system or in the battery and the battery was found to be in a low state of charge, increase setting by .3 volt (do not exceed specified voltage limits) and retest for an improved battery condition after a reasonable service period (week or two). If battery state of charge has increased to a satisfactory level, do not change voltage setting. If battery shows evidence of over-charge—(low electrolyte level, high water consumption, excessive dampness on top of battery), decrease setting by .3 volt and retest for an improved battery condition after a reasonable service period (week or two).

CAUTION: Always adjust settings in steps not to exceed .3 volt at a time. (Do not exceed specified voltage limits.)

(c) The proper setting of the voltage regulator is attained when the battery remains at least 1.225 specific gravity in the winter or 1.245 specified gravity in the summer, with a minimum water requirement (not more than an ounce of water per cell per one thousand miles).

Voltage Regulator Fusible Wire Replacement

(1) Cut fuse wire above the solder connection at the base and unwind wire at top bracket.

CAUTION: If an attempt is made to unsolder the old fuse, the very small wire from voltage coil may be damaged.

(2) Tin end of fuse wire. **Use resin core solder only.**

(3) Holding tinned end of new fuse wire into recessed rivet at base of regulator. Place soldering iron on rivet head and heat sufficiently to melt the solder. Allow solder to cool sufficiently for fuse wire to make a good solder joint.

(4) Pull new fuse wire up enough to remove slack and wrap it around the top bracket. Solder coiled wire

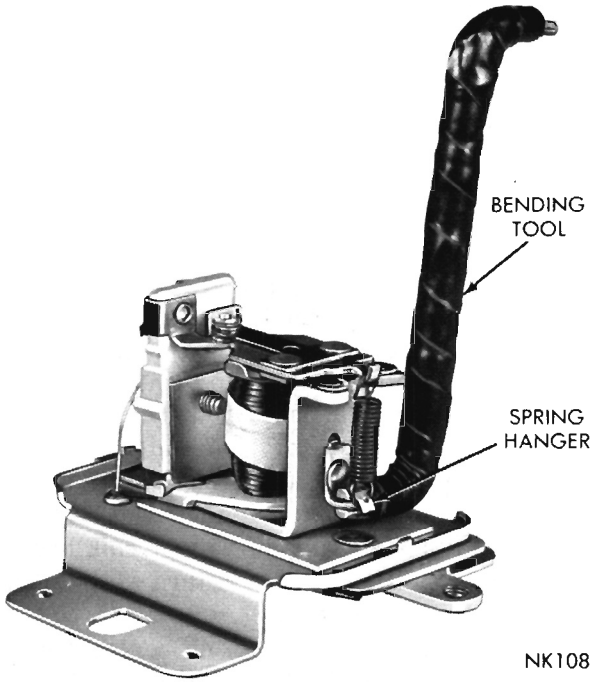

Fig. 11—Adjusting Spring Tension

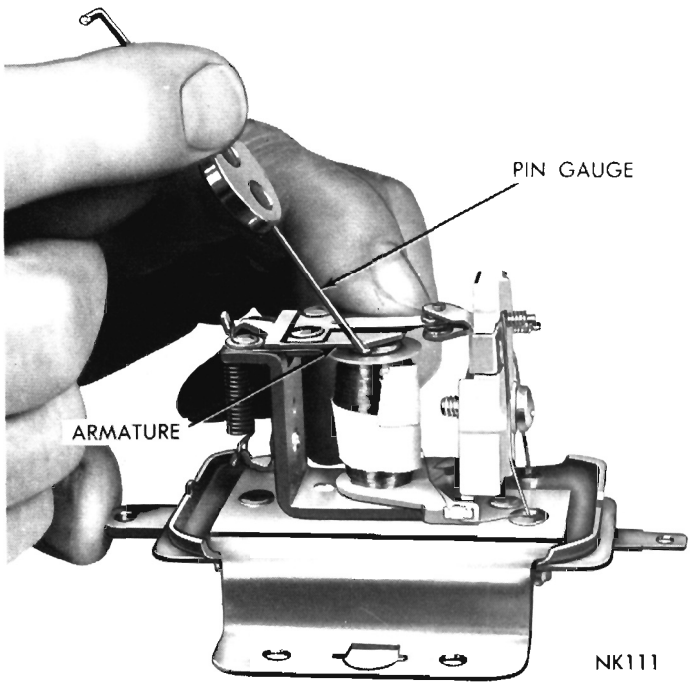

Fig. 12—Testing the Air Gap

to the bracket and cut off surplus fuse wire. **The original fuse wire is machine wound on the upper bracket. Replacement fuse should be soldered to the bracket to ensure a good electrical contact.**

Regulator Mechanical Adjustments

Step 1—Adjust upper contact voltage setting as necessary by bending regulator lower spring hanger **down** to **increase** voltage setting, **up** to **decrease** voltage setting. Use an insulated **tool** to bend spring hanger (Fig. 11). The regulator must be installed, correctly connected, and retested after each adjustment of lower spring hanger. **If repeated readjustment is required, it is permissible to use a jumper wire to ground the regulator base to the fender splash shield for testing, in lieu of reinstalling regulator each time. However, it is important that regulator cover be reinstalled, regulator connections correctly connected, and regulator satisfactorily insulated by fender cover to prevent grounding the regulator terminals or resistances. When testing, regulator must be at the same attitude (or angle) as when installed on vehicle. If step (1) under "Mechanical Adjustments" does not bring voltage regulator within specifications, proceed to Step (2) following:**

Step 2—Measure lower contact point gap. Lower contact gap should be .014 inch plus or minus .002 inch. Adjust lower contact gap as necessary by bending lower stationary contact bracket making sure contacts are in alignment.

If lower contact gap is correct and voltage regulator setting is still outside the .2 to .7 volt increase, adjust air gap as follows:

(a) Connect a small dry cell and test lamp in series with the "IGN" and "FLD" terminal of voltage regulator.

(b) Insert an .048 inch wire gauge between regulator armature and core of the voltage coil next to stop pin on armature (Fig. 12).

(c) Press down on armature (not on the contact reed) until armature contacts wire gauge. Upper contacts should just **open** and test lamp should be **dim.**

(d) Insert an .052 inch wire gauge between the armature and voltage coil core, next to the stop pin on armature.

(e) Press down on armature until it contacts wire gauge. The upper contacts should remain **closed** and test lamp should remain **bright.**

If an adjustment is required to obtain the difference between the upper contact voltage and lower contact voltage of .2 volt to .7 volt; adjust the air gap by loosening the stationary contact bracket screw and moving bracket up or down as necessary to obtain proper air gap setting as follows:

If the difference is above .7 volt, reduce air gap to a minimum of .045 inch with contacts open and test lamp dim. At .048 inch contacts should close and test lamp should be bright.

If the difference is below .2 volt, increase air gap to a maximum of .055 inch with contacts closed and test lamp bright. At .052 inch contacts should be open and test lamp should be dim. **Make sure air gap is checked with stationary contact bracket attaching screw fully tightened.**

ALTERNATOR SERVICE PROCEDURES

If alternator performance does not meet current output specifications limits, it will have to be removed and disassembled for further test and servicing.

(1) Disconnect battery ground cable at battery negative terminal.

(2) Disconnect alternator output "BATT" and field "FLD" leads and disconnect ground wire.

(3) Remove alternator mounting bolts and remove alternator.

BENCH TESTS

Field Coil Draw

If alternator field coil draw has not been tested on vehicle it may be tested on test bench as follows:

(1) Connect test ammeter positive lead to battery positive terminal of a fully charged battery. Connect test ammeter negative lead to field terminal of alternator. Connect a jumper wire to negative terminal of battery, and ground it to alternator end shield.

(2) Slowly rotate alternator rotor by hand. Observe ammeter reading. Field coil draw should be 2.3 amperes to 2.7 ampere at 12 volts. **A low rotor coil draw is an indication of high resistance in field coil circuit, (brushes, slip rings, or rotor coil). A higher rotor coil draw indicates possible shorted rotor coil or grounded rotor.**

Testing Alternator Internal Field Circuit for Ground

(1) To test internal field circuit for ground, remove ground brush. Touch one test prod from a 110 volt test lamp to the alternator insulated brush terminal and remaining test prod to end shield. If rotor assembly or insulated brush is not grounded, lamp will not light.

(2) If lamp lights, remove insulated brush assembly (noting how the parts are assembled) and separate the end shields by removing the three through bolts.

(3) Again test by placing one of the test prods to a slip ring and remaining test prod to end shield. If lamp lights, rotor assembly is grounded and requires replacement. If lamp does not light after removing the insulated brush and separating the end shields, the cause of the ground at the first ground test was a grounded insulated brush.

(4) Examine plastic insulator and screw. Screw is a special size and must not be substituted.

(5) Install insulated brush holder, terminal, insulated washer, shake proof washer and screw. If the parts were not assembled in this order or if wrong screw was used this could be the cause of the ground condition.

DISASSEMBLING THE ALTERNATOR

To prevent possible damage to brush assemblies, they should be removed before proceeding with disassembly of the alternator. The insulated brush is mounted in a plastic holder that positions brush vertically against one of the slip rings.

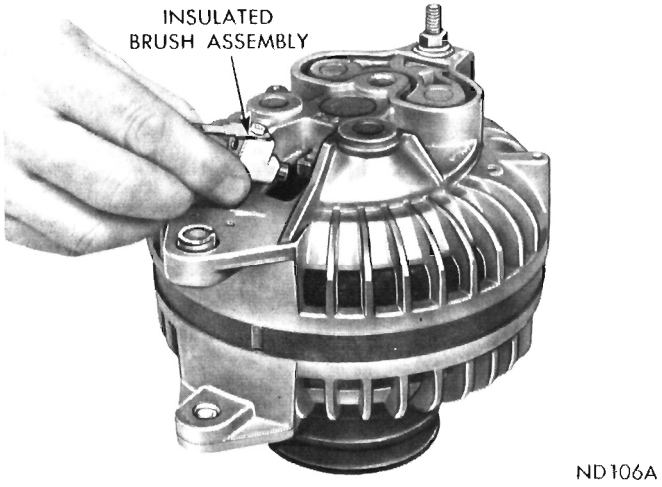

Fig. 13—Removing or Installing Insulated Brush

(1) Remove retaining screw lockwasher, insulated washer, and field terminal, and carefully lift plastic holder containing spring and brush assembly from end housing, (Fig. 13).

(2) The ground brush is positioned horizontally against remaining slip ring and is retained in a holder that is integral with end shield. Remove retaining screw and lift clip, spring and brush assembly from end shield, (Fig. 14).

CAUTION: Stator is laminated, do not burr stator or end shield.

(3) Remove through bolts and pry between the stator and drive end shield with blade of a screwdriver, (Fig. 15). Carefully separate drive end shield, pulley and rotor assembly away from stator and rectifier shield assembly.

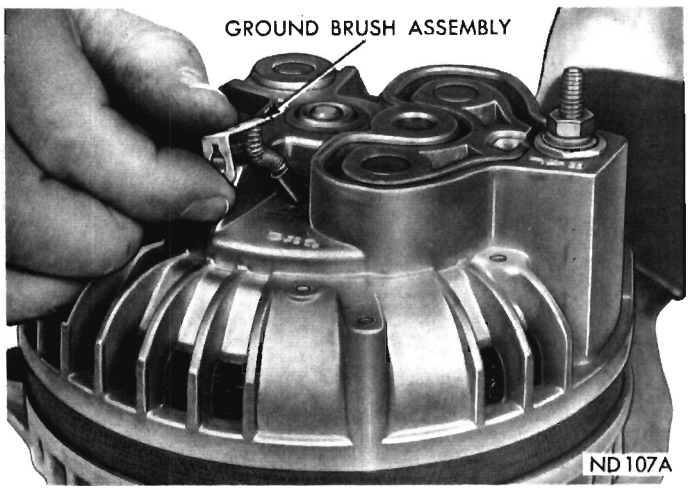

Fig. 14—Removing or Installing Ground Brush

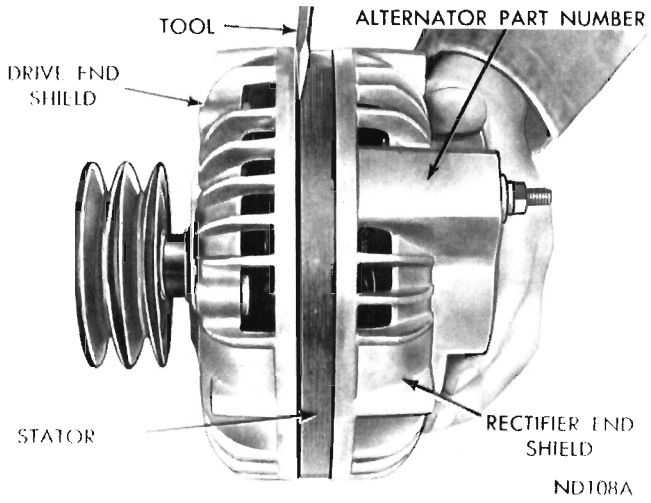

Fig. 15—Separating Drive End Shield From Stator

Testing the Rectifiers with Tool C-3829

The Rectified Tester Tool C-3829 provides a quick, simple and accurate test of the alternator rectifiers without the necessity of disconnecting soldered rectifier leads. With alternator rectifier end shield separated from drive end housing proceed with rectifier tests as follows:

Positive Case Rectifier Test (Fig. 16)

(a) Place alternator on an insulated surface. Connect test lead clip to the alternator ("BAT") output terminal.

(b) Plug in Tool C-3829 power source lead into a 110 volt A.C. power supply. Touch exposed bare metal connections of each of the positive case rectifiers, with test prod.

CAUTION: Do not break the sealing around rectifier lead wire. The sealing material is for protection against corrosion. Always touch test prod to exposed metal connection nearest rectifier.

The reading for satisfactory rectifiers will be 1-3/4 amperes or more. Reading should be approximately the same for three rectifiers.

When two rectifiers are good and one is shorted, reading taken at the good rectifiers will be low, and reading at shorted rectifier will be zero. Disconnect lead to the rectifier reading zero and retest. The reading of the good rectifiers will now be within satisfactory range.

When one rectifier is open it will read approximately one ampere, and two good rectifiers will read within satisfactory range.

Negative Case Rectifier (Fig. 17)

(a) Connect test lead clip to rectifier end housing.

(b) Touch exposed connection of each of the negative case rectifiers with test prod.

Test specifications are the same, and test results will be approximately the same as for positive case rectifiers, except meter will read on opposite side of scale.

TESTING RECTIFIERS AND STATOR (When Tool C-3829 is not available)

(a) Separate the three (3) stator leads at "Y" connection (Fig. 18). **Cut stator connection as close to connector as possible. If they are cut too short it may be difficult to get them together again for soldering.**

(b) Test rectifiers with a 12 volt battery and a test lamp equipped with a number 67 bulb (4 candle power) by connecting one side of test lamp to positive battery post; other side of test lamp to a test probe with other test probe connected to the negative battery post.

(c) Contact outer case of rectifier with one probe and other probe to wire in center of rectifier (Fig. 19).

(d) Reverse the probes, moving probe from rectifier outer case to rectifier wire, and the probe from rectifier wire to rectifier outer case.

If test lamp "lights" in one direction but does "not light" in other direction, rectifier is satisfactory. If

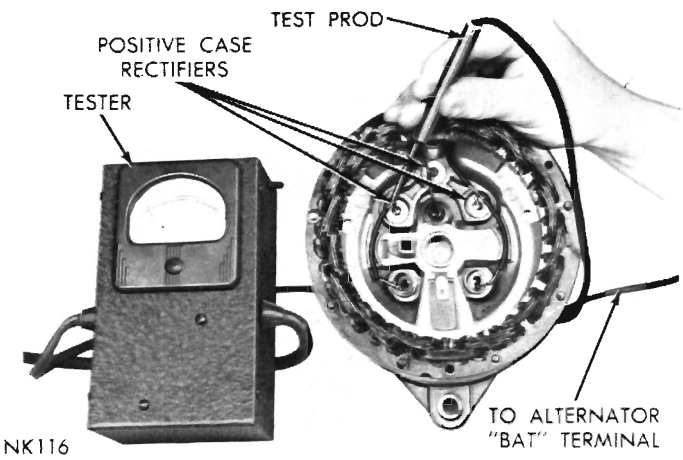

Fig. 16—Testing Positive Rectifiers

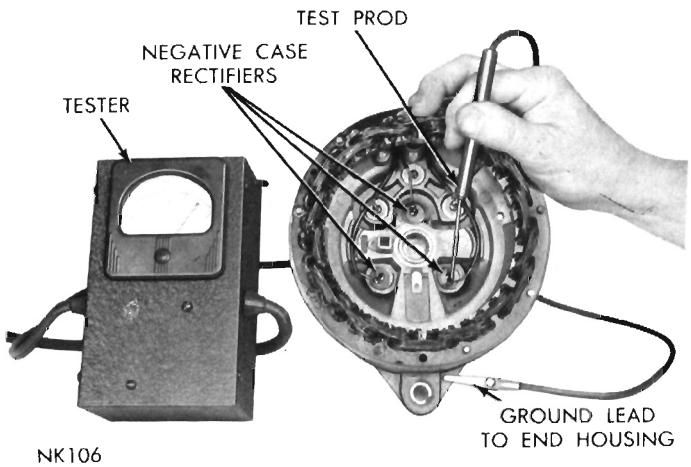

Fig. 17—Testing Negative Rectifiers

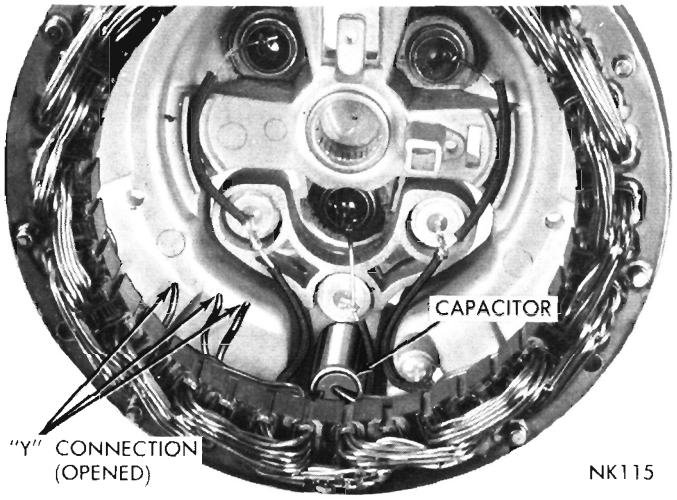

Fig. 18—Separating the Three Stator Leads

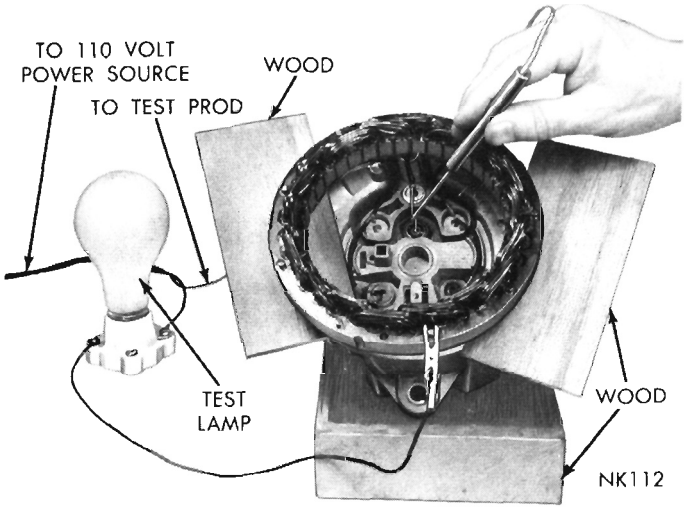

Fig. 20—Testing Stator for Ground

lamp lights in "both directions," **rectifier** is "shorted." If test lamp does "not light" in either direction, rectifier is "open." **Possible cause of an open or blown rectifier is a faulty capacitor or a battery that has been installed in reverse polarity. If battery is installed properly and the rectifiers are open, test capacitor capacity—.50 microfarad (plus or minus 20%).**

(e) Unsolder rectifier leads from stator leads. **Do not blow solder off with air—fine particles of solder can short other rectifiers.**

(f) Test stator for grounds using a 110 volt test lamp (Fig. 20). Use wood slats to insulate the stator from rectifier shield. Contact one prod of test lamp to stator pole frame, and contact the other prod to each of the three stator leads. Test lamp should "not light." If test lamp lights, stator windings are "grounded."

(g) Test stator windings for continuity, by contacting one prod of test lamp to **all** three stator leads at "Y" connection. Contact each of the three stator leads (disconnected from rectifiers). Test lamp should "light" when prod contacts each of the three leads. If lamp does not light stator winding is "open" (Fig. 21).

(h) Install a new stator if stator tested is "grounded" or "open." If the rectifiers must be replaced, unsolder the rectifier wire from the stator lead wire at the soldered joint. **Three rectifiers are pressed into the heat sink and three in end shield. When removing rectifiers, it is necessary to support end shield and/or heat sink to prevent damage to these castings.**

(4) Place Rectifier Removing and Installing Press in a vise and support end shield on clamp anvil under rectifier to be removed (Fig. 22). **Support tool adapter SP-3821 is cutaway and slotted to fit over wires and around bosses in end shield. Make sure bore of tool completely surrounds rectifier during removal process.**

(5) Carefully apply pressure with tool pressure screw until support tool, rectifier end shield, and remover pin, and remover adapter are in alignment then press the rectifier out of end shield or heat sink.

(6) The pulley is an interference fit on rotor shaft. Remove pulley with Puller Tool C-4068, (Fig. 23).

(7) Pry drive end bearing spring retainer from end shield with a screwdriver (Fig. 24).

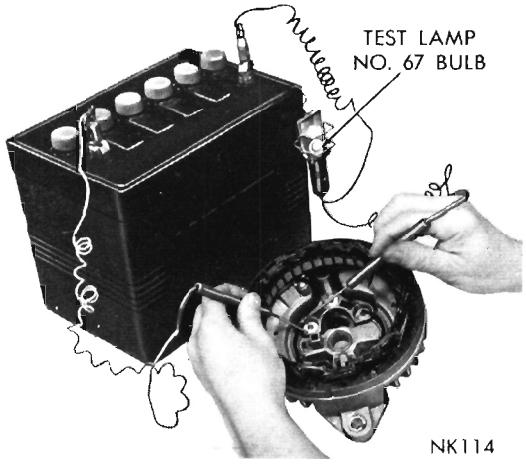

Fig. 19—Testing Rectifiers with Test Lamp

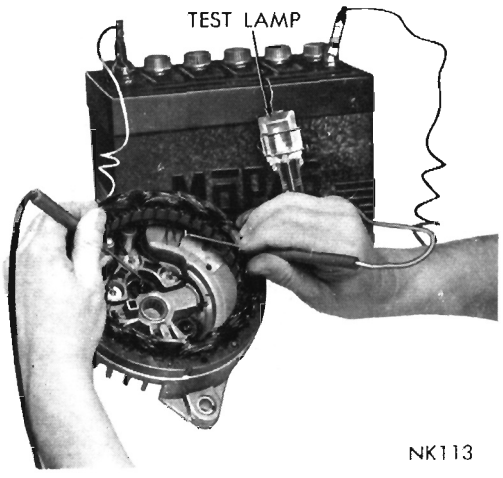

Fig. 21—Testing Stator Windings for Continuity

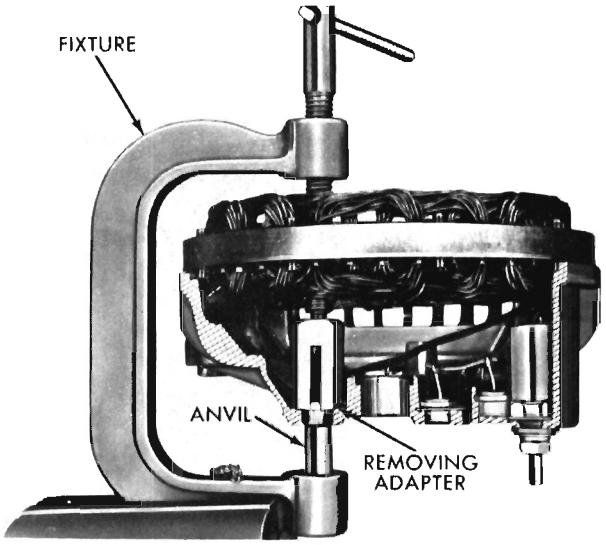

Fig. 22—Removing the Rectifiers

(8) Support end shield and tap rotor shaft with a plastic hammer to separate rotor from end shield. **The new bearing is lubricated with a predetermined amount of special lubricant and does not require additional lubrication.**

(9) The drive end ball bearing is an interference fit with the rotor shaft. Remove bearing with Puller Tool C-4068, (Fig. 25).

(10) Remove output terminal nuts and washers and remove terminal screw and inside capacitor. **The heat sink is also held in place by the terminal screw.**

(11) Remove insulator (Fig. 26).

(12) The needle roller bearing in rectifier end

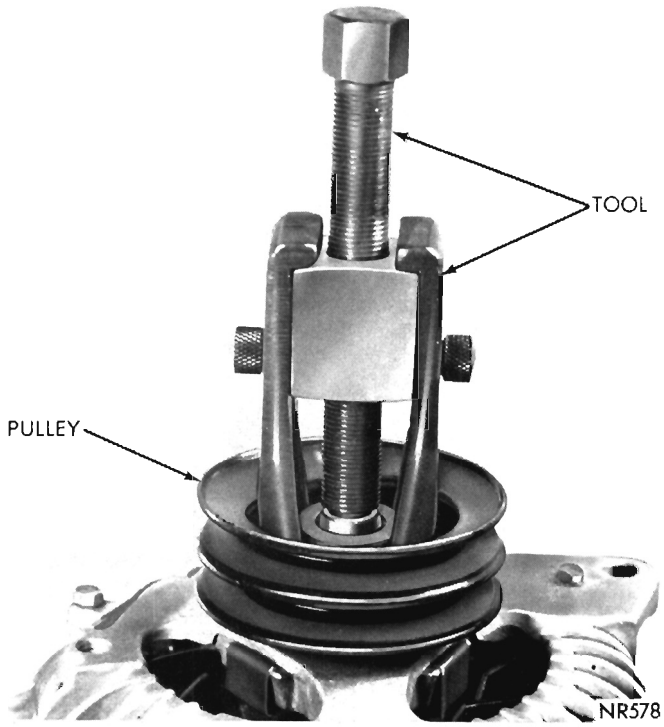

Fig. 23—Removing the Pulley

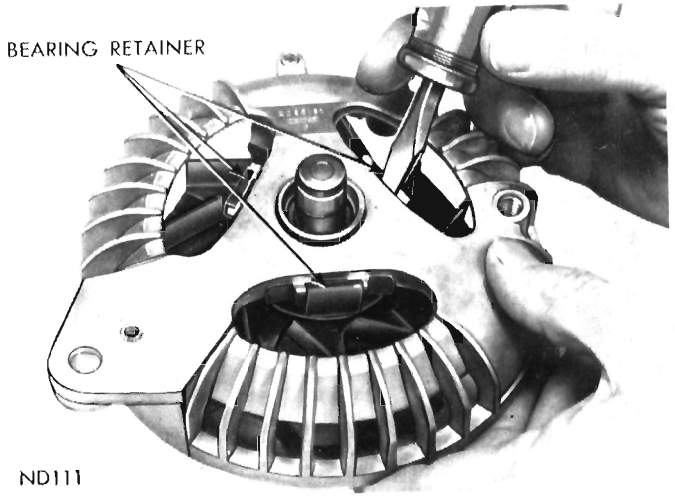

Fig. 24—Disengaging Bearing Retainer from End Shield

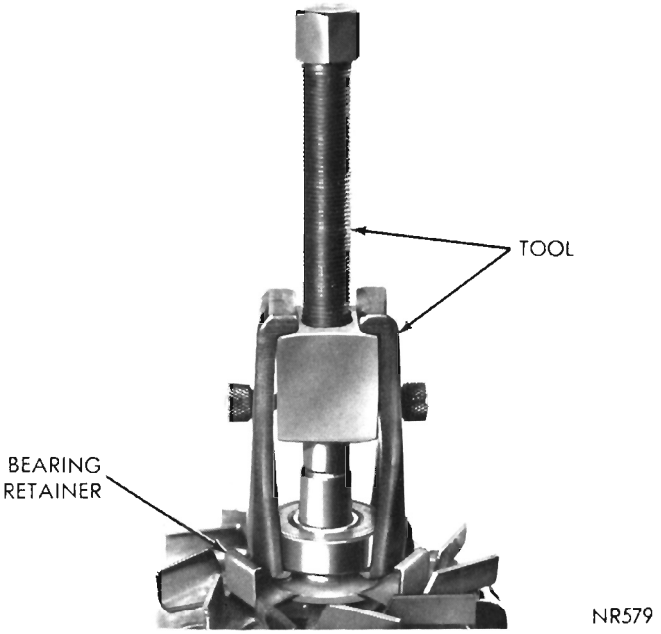

Fig. 25—Removing Bearing from Rotor Shaft

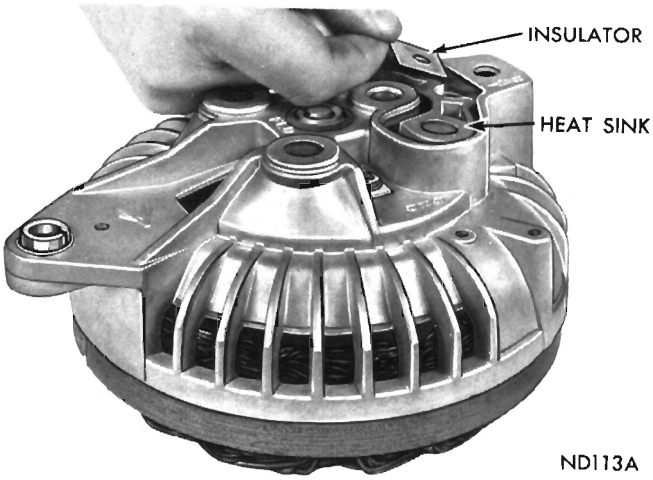

Fig. 26—Removing Heat Sink Insulator

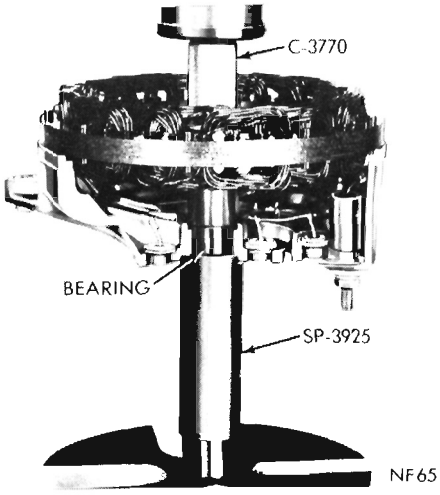

Fig. 27—Removing Rectifier End Shield Bearing

shield is a press fit. If necessary to remove rectifier end frame needle bearing, protect end shield by supporting shield with Tool C-3925 when pressing bearing out with Tool C-3770A (Fig. 27). Make sure notches in tool clear raised section of heat sink. **The new bearing is prelubricated and no additional lubricant should be added, as an excessive amount of lubricant will contaminate the slip rings and cause premature brush and rotor failures.**

REPLACING SLIP RINGS

Slip rings that are damaged can be replaced as follows:

(a) Remove rotor plastic grease retainer.

(b) Unwind field coil leads from slip ring lugs (Fig. 28) being careful not to break the wire leads.

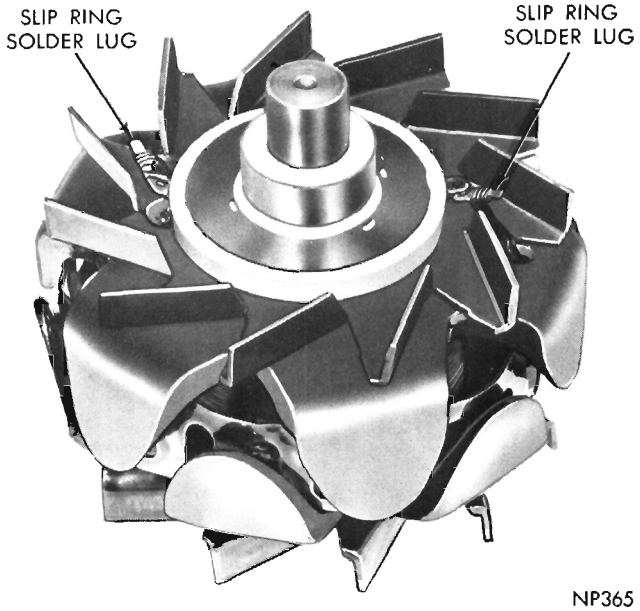

Fig. 28—Solder Points—Slip Ring Installed

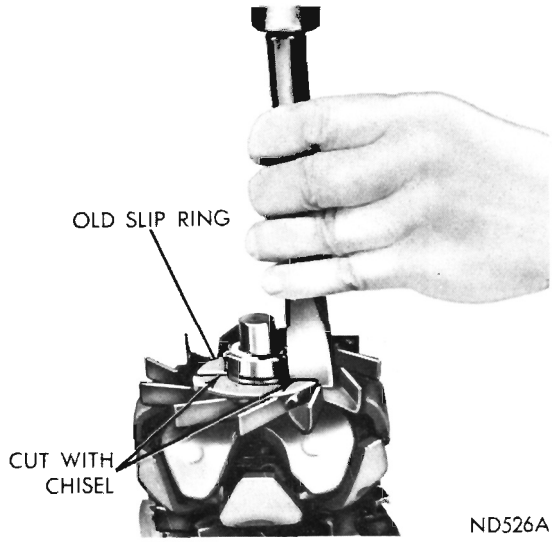

Fig. 29—Cutting Old Slip Rings

(c) Use a chisel to cut through the copper of both slip rings at opposite points (180° apart) (Fig. 29).

(d) Break the plastic insulator and remove the old slip ring.

(e) Clean away dirt and particles of old slip ring from rotor.

(f) Scrape ends of field coil wires clean for good electrical contact.

(g) Position field coil wires so as to clear path for new slip ring.

(h) Position new slip ring carefully on rotor shaft to insure that slip ring lugs will be in proper position for connecting field coil wires (Fig. 30).

(i) Place installing Tool C-3900 over rotor shaft and position rotor, slip ring and tool assembly in arbor press (Fig. 31). Press slip ring on shaft. **When slip ring is bottomed on rotor fan, the field lead wire (insulated brush ring) should clear the access hole, the fan and pole piece.**

(j) Tin field coil lead wires.

(k) Coil each field lead wire around the slip ring lug, starting first wrap against shoulder of lug and winding outward. Solder with resin core solder (Fig. 32).

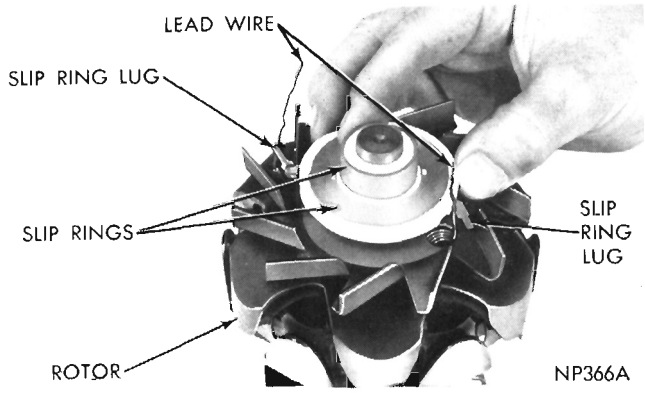

Fig. 30—Aligning Slip Ring with Field Lead Wires

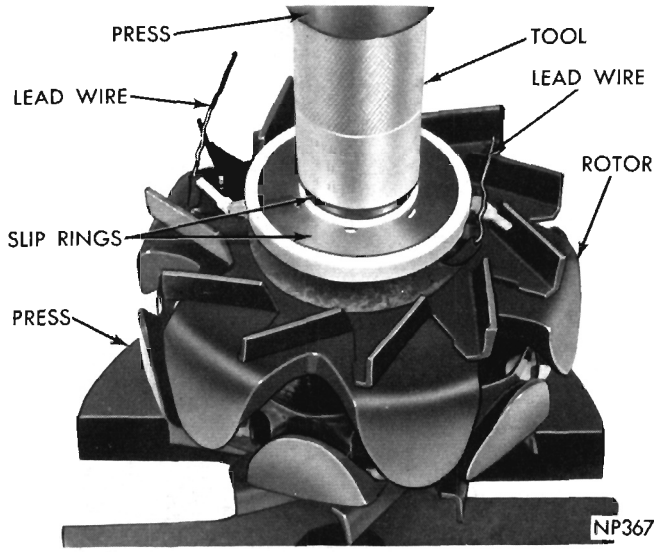

Fig. 31—Installing Slip Rings

(l) Test slip rings for ground with a 110 volt test lamp by touching one test lead prod to rotor pole piece and remaining prod to slip ring. Test lamp should not light. If lamp lights, slip rings are shorted to ground.

(m) Test slip ring for continuity by placing one test prod on the positive and the other test prod on the ground slip ring. Light should go on showing the field circuit is completed.

(n) If rotor is not grounded and field circuit is continuous, lightly clean slip rings surface with 00 sandpaper.

(o) Position grease retainer on rotor shaft and press retainer on shaft with installer Tool C-3921 (Fig. 33). The plastic retainer is properly positioned

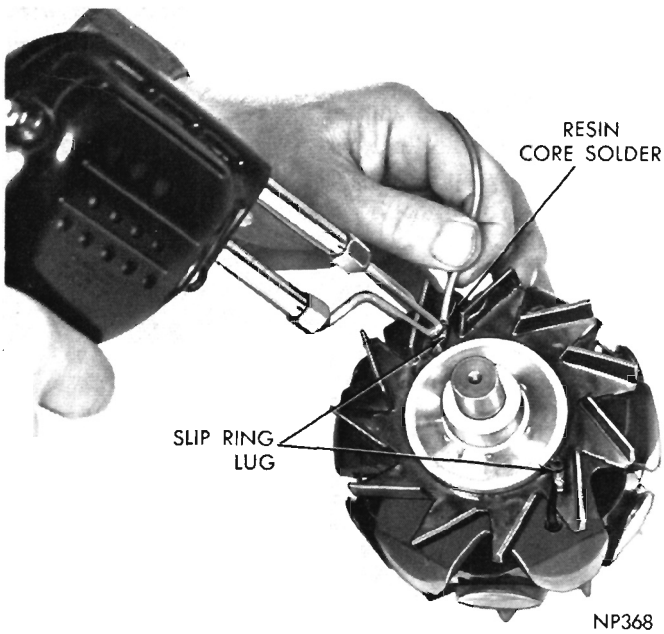

Fig. 32—Soldering Field Coil Leads

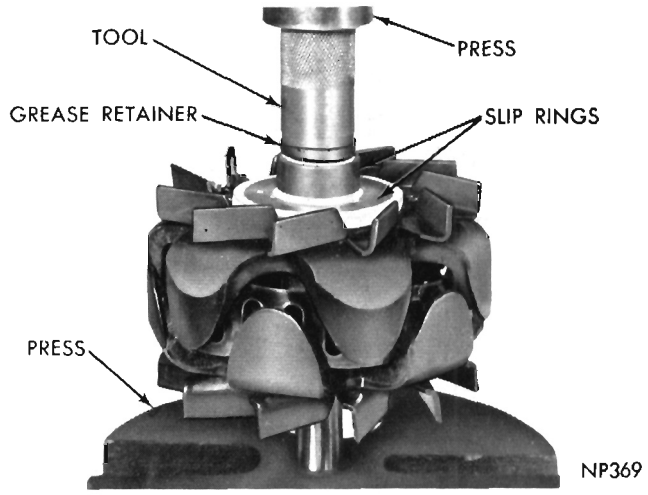

Fig. 33—Installing Grease Retainer

when the inner bore of the installer tool bottoms on the rotor shaft.

ASSEMBLING THE ALTERNATOR

(1) Check rectifier identification to make sure correct rectifier is being installed. Refer to Parts List for rectifier identification.

(2) Start rectifier squarely into mounting hole.

(3) Support heat sink or rectifier end shield on installer adapter of Tool C-3928. With the installing adapter positioned on the rectifier, carefully apply pressure with tool pressure screw until the installer tool, rectifier, rectifier end shield or heat sink are in alignment and after determining that rectifier is started squarely in the casting, slowly apply pressure with tool pressure screw until you feel the collar of rectifier bottom against casting (Fig. 34). **Make sure installer support adapter fits square around the rectifier inner boss and that pressure is applied on outer rim of rectifier.**

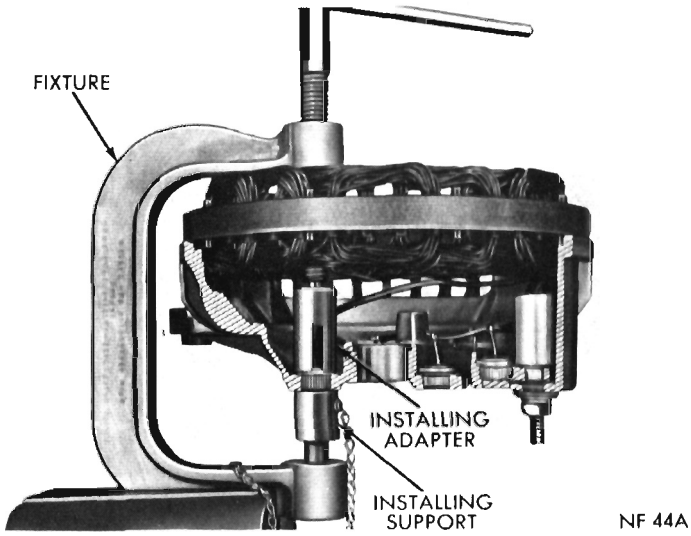

Fig. 34—Installing a Rectifier

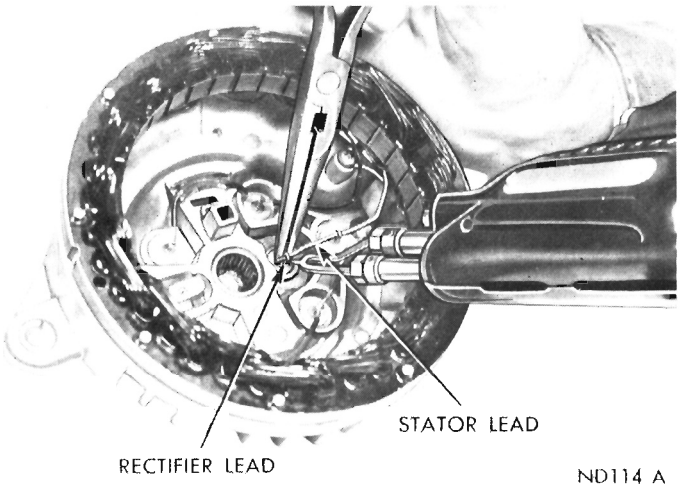

Fig. 35—Soldering Rectifier and Stator Leads

CAUTION: DO NOT USE a hammer to start the rectifier into its bore in end shield. DO NOT HAMMER OR SHOCK the rectifier in any manner as this will fracture the thin silicon wafer in the rectifier causing complete rectifier failure.

(4) Clean the leads and mate stator lead with rectifier wire and bend the loop snugly around stator lead to provide a good electrical and mechanical connection. Solder wires with resin core solder. Hold rectifier lead wire with pliers just below the joint while soldering (Fig. 35). Pliers will absorb heat from the soldering operation and protect rectifier. **After soldering, quickly cool soldered connection; touch a dampened cloth against it. This will aid in forming a solid joint.**

(5) After soldering, stator leads must be pushed down into the slots cast into the end shield and cemented with MoPar Cement Part Number 2299314 or equivalent to protect the leads against possible interference with the rotor fans. Test each replacement rectifier to make certain rectifier was not damaged by the soldering or pressing operations.

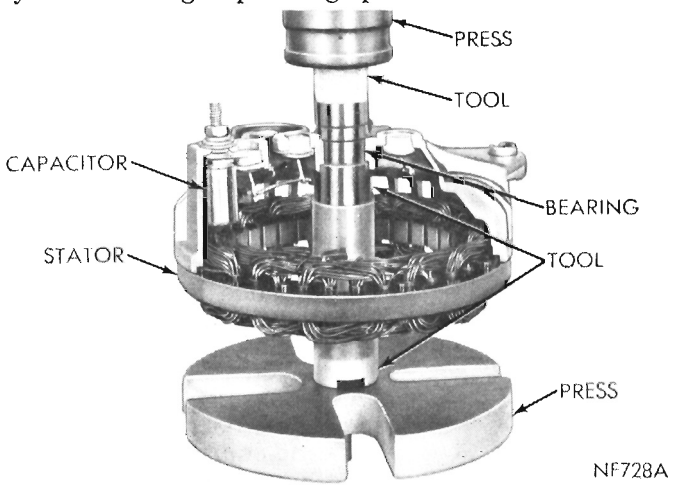

Fig. 36—Installing Rectifier End Shield Bearing

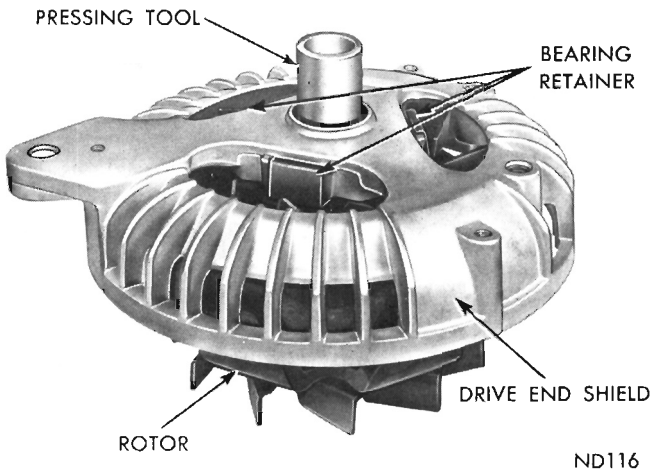

Fig. 37—Installing Drive End Shield Bearing

(6) Support end shield on Tool C-3925 so that notches in the support tool will clear the raised section of the heat sink and press the bearing into position with Tool SP-3381 (Fig. 36), until bottomed on support tool. **New bearings are pre-lubricated, additional lubrication is not required.**

(7) Insert drive end bearing in drive end shield and install bearing retainer plate to hold bearing in place.

(8) Position bearing and drive end shield on rotor shaft and, while supporting base of rotor shaft, press bearing and shield into position on rotor shaft with arbor press and Tool C-3858 (Fig. 37).

CAUTION: Make sure bearing is installed squarely at installation; otherwise, damage to bearing will result. Press bearing on rotor shaft until bearing contacts shoulder on rotor shaft fan hub.

(9) Install pulley on rotor shaft. Shaft of rotor must be supported in a manner so all pressing force is on pulley hub and rotor shaft (Fig. 38). **Press pulley on rotor shaft until pulley contacts inner race of drive and bearing. Do not exceed 6800 pounds pressure. Do not hammer.**

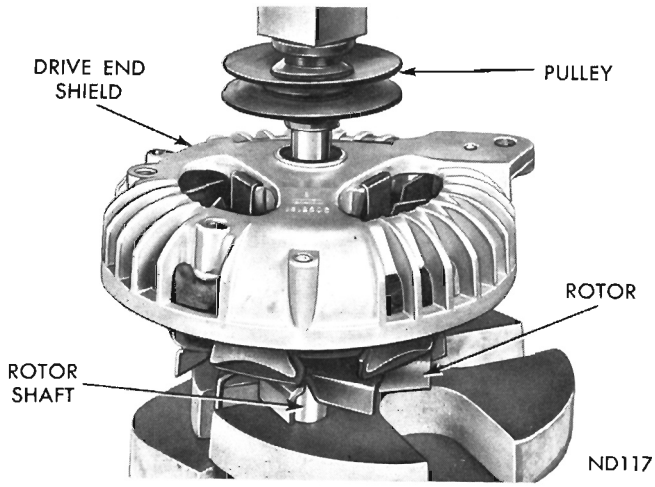

Fig. 38—Installing Alternator Pulley

(10) The alternators have the capacitor mounted internally. Make sure heat sink insulator is in place (Fig. 26).

(11) Install output terminal screw and capacitor through heat sink and end shield.

(12) Install insulating washers, lockwashers and lock nuts.

(13) Make sure heat sink and insulator are in position then tighten lock nut.

(14) Position stator on rectifier end shield.

(15) Position rotor and end shield assembly on stator and rectifier end shield assembly. Align through bolt holes in the stator, rectifier end shield and drive end shield.

(16) Compress stator and both end shields by hand and install through bolts, washers and nuts. Tighten bolts evenly to 20-30 inch-pounds.

(17) Install insulated brush in rectifier end shield. Place bronze terminal on plastic holder with tab of terminal in the recess in plastic holder.

(18) Place **nylon washer** on the bronze terminal and install lockwasher and attaching screw.

(19) Install ground brush and attaching screw.

(20) Rotate pulley slowly by hand to be sure rotor fans do not hit the rectifiers, capacitor lead, and stator connections.

(21) Install alternator and adjust drive belt to specifications.

(22) Connect (output) "BAT" and (field) "FLD" leads and connect ground wire.

(23) Connect battery ground cable.

(24) Start and operate engine, and observe alternator operation.

(25) Test current output and adjust regulator voltage setting, if necessary.

IGNITION SYSTEM—6-CYLINDER

INDEX

	Page		Page
Assembling the Distributor	42	Idle R.P.M. Test	40
Ballast Resistor	46	Ignition Coil	46
Distributor Advance Testing	45	Ignition Timing	41
Distributor Contact Dwell	40	Installing and Aligning Contacts	45
Distributor Contacts	44	Lubrication - Distributor	45
Distributor Disassembly	42	Secondary Circuit Inspection	39
Distributor Installation	45	Service Diagnosis	38
Distributor Lubrication	45	Shaft and Bushing Wear Test	41
Distributor Removal	41	Spark Plugs	56
Distributor Resistance Test	40	Specifications	102
Dwell Variation	40	Testing Contact Arm Spring Tension	43
General Information	38	Timing - Ignition	41

GENERAL INFORMATION

The ignition system consists of two separate circuits. The battery, ammeter, ignition switch, ballast resistor, primary winding of the ignition coil, distributor contacts and condenser, vehicle frame, and primary wiring make up the low voltage primary circuit. The secondary high voltage circuit includes the coil secondary winding, distributor cap and rotor, spark plug cables, spark plugs and vehicle frame.

SERVICE DIAGNOSIS

Condition	Possible Cause	Correction
BURNED OR PITTED DISTRIBUTOR CONTACTS	(a) Dirt or oil on contacts.	(a) If oil is on contact face, determine cause and correct condition. Clean distributor cam of dirt and grease, apply a light film of distributor cam lubricant to cam lobes; wipe off excess. See "Distributor Lubrication." Replace contact set and adjust as necessary.
	(b) Alternator voltage regulator setting too high.	(b) Test alternator voltage regulator setting, adjust as necessary. Replace contact set and adjust as necessary.
	(c) Contacts misaligned or gap too small.	(c) Align and adjust contacts.
	(d) Faulty coil.	(d) Test and replace coil if necessary. Replace and adjust contacts.

Condition	Possible Cause	Correction
	(e) Ballast resistor not in circuit.	(e) Inspect conditions, and correctly connect the coil.
	(f) Wrong condenser or faulty condenser.	(f) Test condenser and replace if necessary. Replace and adjust contacts.
	(g) Faulty ignition switch.	(g) Replace ignition switch.
	(h) Bushings worn.	(h) Replace housing.
	(i) Touching contacts with the hands during installation.	(i) Replace and adjust contacts.
IGNITION COIL FAILURE	(a) Coil damaged by excessive heat from engine.	(a) Replace coil. Inspect condition of the distributor contacts.
	(b) Coil tower carbon-tracked.	(b) Replace the coil.
	(c) Oil leak at tower.	(c) Replace the coil.

SERVICE PROCEDURES

Secondary Circuit Inspection

Check the high tension cable connections for good contact at the coil and distributor cap towers and at the spark plugs. Terminals should be fully seated. The nipples and spark plug covers should be in good condition. Nipples should fit tightly on the coil cap towers and spark plug cover should fit tight around spark plug insulators. Cable connections that are loose will corrode and increase the resistance and permit water to enter the towers causing ignition malfunction. **To maintain proper sealing between the towers and nipples, cable and nipple assemblies should not be removed from the distributor or coil towers unless nipples are damaged or cable testing indicates high resistance or broken insulation.**

Clean high tension cables with a cloth moistened with a non-flammable solvent and wipe dry. Bend cable to check for brittle or cracked insulation.

When testing secondary cables for punctures and cracks with an oscilloscope follow the instructions of the equipment manufacturers.

If an oscilloscope is not available, secondary cables can be tested as follows:

(a) Engine not running, connect one end of a test probe to a good ground, other end free for probing.

(b) Disconnect cable at spark plug end. Insulate cable end from grounding.

(c) With engine running, move test probe along entire length of wire. If punctures or cracks are present there will be a noticeable spark jump from the faulty area to the probe. Secondary coil wire may be checked in the same manner, be sure one spark plug cable is disconnected from spark plug while running probe along coil wire secondary cable. Cracked, leaking or faulty cables should be replaced.

When installing new cable assemblies, install new high tension cable and nipple assembly over cap or coil tower, entering the terminal into the tower, push lightly, then pinch the large diameter of nipple (Fig. 1) to release trapped air between the nipple and tower. Continue pushing on the cable and nipple until cables are properly seated in the cap towers. Use the same procedure to install cable in coil tower (Fig. 2). Wipe the spark plug insulator clean before reinstalling cable and cover.

Resistance type cable is identified by the words "Electronic Suppression" printed on cable jacket. No additional resistors are necessary.

An ohmmeter can be used to check resistance type cables for open circuits, loose terminals or high resistance as follows:



Fig. 1—Installing Secondary Cable and Nipples at Distributor Cap Towers

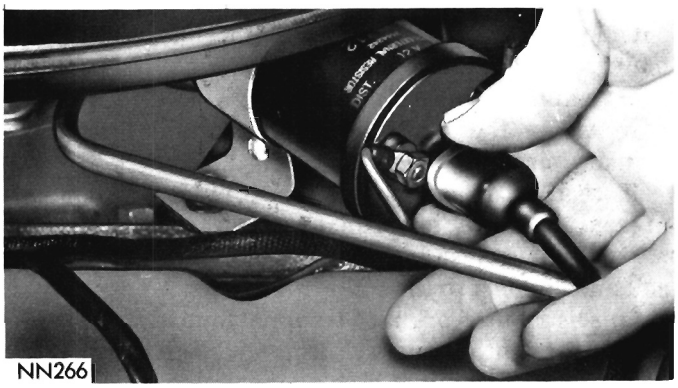

Fig. 2—Installing Secondary Cable and Nipple at Coil Tower

(a) Remove cable from spark plug and install the proper adapater between cable and the spark plug.

(b) Lift distributor cap from distributor with cables intact. **Do not remove cables from the cap.**

(c) Connect the ohmmeter between spark plug adapter and the corresponding electrode inside the cap, making sure ohmmeter probes are in good contact. If resistance is more than 30,000 ohms, remove cable at cap tower and check cable resistance. If resistance is more than 30,000 ohms, replace cable assembly. Test all spark plug cables in same manner.

To test coil to distributor cap high tension cable, remove distributor cap with the cable intact. **Do not remove cable from the coil or cap.** Connect the ohmmeter between center contact in the cap and either primary terminal at coil. If the combined resistance of coil and cable is more than 25,000 ohms, remove the cable at coil tower and check cable resistance. If resistance is more than 15,000 ohms, replace cable. If resistance is less, check for a loose connection at the tower or for a faulty coil.

Inspect coil tower for cracks, carbon tracking or oil leaks.

DISTRIBUTOR RESISTANCE TEST

This test indicates the resistance of the ignition primary circuit from the distributor side of the coil, through the contacts and distributor ground.. Excessive resistance in this portion of the ignition system will prevent the coil from producing sufficient output for good overall ignition. To perform test, proceed as follows:

(1) Turn Selector Switch of a Tach-Dwell unit to CALIBRATE position and adjust Dwell Calibrator until Dwell Meter reads on the set line (test leads separated).

(2) Leave Selector Switch in CALIBRATE position, connect Tach-Dwell red lead to distributor terminal of coil and black lead to a good ground.

(3) Turn ignition switch "ON." Observe dwell meter reading. Meter pointer should be within bar marked "DISTRIBUTOR RESISTANCE." If reading is zero or outside of bar, crank engine with the starter until meter pointer moves as far to the right as possible. (This will indicate that contacts are closed.) A reading now within the bar indicates a normal distributor primary circuit.

If reading is outside the bar, high resistance is present in distributor primary circuit.

(4) Remove test lead from distributor terminal of coil and connect to the following points:

(a) Distributor primary terminal (outside)
(b) Distributor primary terminal (inside)
(c) Contact terminal bracket (insulated bracket)
(d) Ground side of contacts.
(e) Distributor housing.

(5) Repeat test at each connection until a noticeable change occurs in meter reading. If a poor connection or faulty lead is indicated, clean, tighten or replace as necessary and repeat test (3).

If faulty contacts are indicated, remove distributor for complete inspection, service, testing and calibration.

IDLE RPM TEST

Engine idle rpm setting should be tested and recorded as it is when the vehicle is first brought into the shop for testing. This will assist in diagnosing complaints of engine stalling or complaints of creeping and hard shifting on vehicles equipped with automatic transmissions.

Test procedures are as follows:

(1) Turn Selector Switch to CALIBRATE position and adjust Dwell Calibrator until Dwell Meter reads on SET line (test leads separated).

(2) Connect red lead of the test unit to the distributor primary terminal at the coil and the black lead to a good ground.

(3) Turn Selector Switch to the 6 LOBE position.

(4) Turn Tach-Dwell RPM Switch to the 1000 RPM position.

(5) With engine at normal operating temperature (off fast idle), momentarily open the throttle and release to make sure there is no bind in the linkage and that idle speed screw is against its stop.

(6) Note engine RPM on 1000 RPM scale and adjust carburetor idle speed to specifications shown in Fuel System "Specifications."

DISTRIBUTOR CONTACT DWELL

The degrees of distributor dwell are the degrees of rotation through which the breaker contacts remain closed. This is also commonly referred to as "dwell angle" or "cam angle."

Correct distributor contact dwell is essential for good ignition performance and contact life.

Test procedures are as follows:

(1) Disconnect vacuum line.

(2) Connect Tach-Dwell red lead to distributor terminal of coil and black lead to a good ground.

(3) Turn Selector Switch to 6 LOBE position.

(4) Start engine and operate at idle speed.

(5) Observe Dwell-Meter reading. If dwell reading is within "Specifications," contact gap, cam rubbing block and contact arm are all in satisfactory condition.

If dwell reading is not within specifications, incorrect contact gap, worn cam, worn rubbing block or distorted movable contact arm may be indicated.

DWELL VARIATION

This test indicates the mechanical condition of the distributor. Excessive wear in distributor mechanical

parts cause dwell variations which will affect ignition timing.

Test procedures are as follows:

(1) With engine at idle speed, **vacuum hose disconnected,** and with test leads connected as in Contact Dwell Test, turn the Tach-Dwell RPM Switch to 5000 RPM position.

(2) Slowly increase engine speed to 1500 RPM then slowly reduce to idle speed while observing Dwell Meter reading.

If dwell reading varies more than 2 degrees from initial reading between idle speed and 1500 RPM, probable wear in the distributor shaft, bushings or breaker plate is indicated. Remove distributor for complete inspection and testing on a distributor tester. **Dwell variation at speeds above 1500 RPM does not necessarily indicate distributor wear.**

IMPORTANT: Dwell and gap of the contacts must both be within their specified limits at the same time. If this cannot be accomplished, it is probable that wrong contacts are installed, the rubbing block or cam lobes are badly worn or the movable contact arm is distorted.

IGNITION TIMING

To obtain maximum engine performance, the distributor must be correctly positioned on the engine to give proper ignition timing.

The ignition timing test will indicate timing of the spark at No. 1 cylinder at idle (only).

Test procedures are as follows:

(1) Disconnect vacuum hose at distributor.

(2) Connect secondary lead of Power Timing Light to No. 1 spark plug, red primary lead to positive terminal of battery and black primary lead to negative battery terminal. **Do not puncture cables, boots or nipples with test probes. Always use proper adapters. Puncturing spark plug cables with a probe will damage the cables. The probe can separate the conductor and cause high resistance. In addition, breaking the rubber insulation may permit secondary current to arc to ground.**

(3) Start engine and set idle to "Specifications" (Transmission in Neutral).

(4) Loosen distributor hold-down arm screw just enough so the distributor housing can be rotated in its mounting.

(5) Aim Power Timing Light at timing plate on chain case cover. If light flash occurs when timing mark on the vibration damper is located ahead of the specified degree mark on timing plate in the direction of engine rotation, timing is advanced. To adjust, turn distributor housing in direction of rotor rotation.

If flash occurs when the vibration damper timing mark is located past the specified degree mark in the direction of engine rotation, timing is retarded. To adjust, turn distributor housing against direction of rotor rotation. Refer to "Specifications." (Moving the distributor housing counterclockwise advances ignition timing and clockwise retards timing.)

(6) Tighten distributor hold-down arm screw after timing has been set and recheck timing adjustment with a Power Timing Light.

(7) When ignition timing is correct, reconnect vacuum hose to distributor.

Ignition Timing (with C-744 Test Lamp)

(1) Connect C-744 test lamp between distributor primary terminal and battery positive post.

(2) Turn engine until number 6 exhaust valve is just closing; continue turning the engine slowly until mark on the crankshaft pulley is at specified degree mark at case cover.

(3) Loosen distributor clamp bolt so distributor housing can be rotated with a slight drag, then turn distributor in the normal rotation until test lamp lights.

(4) Turn distributor against normal distributor rotation until test lamp goes out. **If test lamp lights immediately when connected, turn distributor against normal distributor rotation until light goes out.**

(5) Tighten distributor clamp bolt securely and remove test lamp. If operation is performed properly the engine is timed to specifications. **If engine is turned beyond the timing mark, continue turning engine for two full revolutions of the crankshaft; this will place the distributor rotor in approximately the initial position.**

CAUTION: DO NOT reverse rotation of crankshaft if you have passed the timing mark as this would affect valve timing and distributor timing.

DISTRIBUTOR REMOVAL

(1) Disconnect vacuum hose at distributor.

(2) Disconnect primary lead wire at coil.

(3) Unfasten distributor cap retaining clips and lift off distributor cap.

(4) Rotate engine crankshaft until the distributor rotor is pointing toward the cylinder block, scribe a mark on block at this point to indicate position of the rotor as reference when reinstalling distributor.

(5) Remove distributor hold-down arm screw.

(6) Carefully lift the distributor from the engine, shaft will rotate slightly as the distributor gear is disengaged from the camshaft gear.

SHAFT AND BUSHING WEAR TEST

(1) Remove distributor rotor.

(2) Disconnect primary lead wire at distributor terminal. **Do not loosen** removable contact arm spring retaining nut.

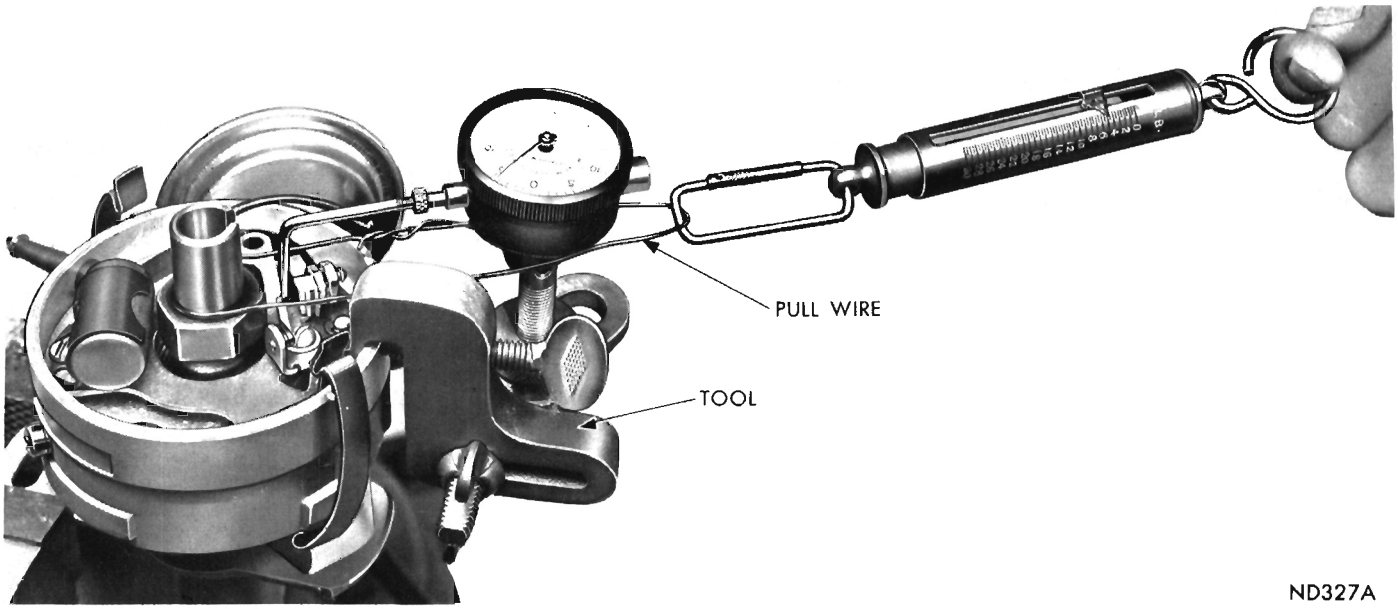

Fig. 3—Shaft and Bushing Wear Test

(3) Clamp distributor hold-down arm in a vise equipped with soft jaws and apply only enough pressure to restrict any movement of the distributor during this test.

(4) Attach a dial indicator to distributor housing so indicator plunger arm rests against movable arm at rubbing block and with rubbing block of movable contact arm on highest point of a cam lobe (Fig. 3).

(5) Place one end of a wire loop around the top of distributor shaft. Hook a spring scale in the other end of the wire loop and pull on a line with the plunger of the indicator gauge. The wire loop must be down on the distributor shaft to insure a straight pull also be sure that the wire loop does not interfere with the indicator or indicator holding bracket. Apply a five pound pull and read the movement of the plunger on the indicator dial. (Be sure the rubbing block of the movable contact arm is on the highest point of the cam lobe during this test.) If the plunger movement exceeds .006 inch, replace the distributor housing or shaft assembly, see "Distributor Disassembly."

DISTRIBUTOR DISASSEMBLY (Fig. 4)

(1) Remove distributor rotor.

(2) Remove the two screws and lockwashers attaching the vacuum control unit to distributor housing and remove vacuum control unit.

(3) Disconnect primary lead at terminal screw and slide primary lead off the contact plate terminal. Remove wire and grommet as an assembly. (Push grommet towards inside of distributor to remove—**Do not pull the wire.**)

(4) Remove two screws and lockwashers attaching contact plate to the housing and lift out contact plate, contacts and condenser as an assembly. **Distributor cap clamp springs are held in place by peened metal around the openings and should not be removed.**

(5) If the side play exceeds .006 inch in "Shaft and Bushing Wear Test", replace distributor housing assembly or shaft and governor assembly as follows:

(a) Remove distributor drive gear retaining pin and slide gear off end of shaft. If gear is worn or damaged see "Assembling-Distributor" step 5.

CAUTION: Support hub of gear in a manner that pin can be driven out of gear and shaft without damaging gear teeth.

(b) Use a file to clean burrs from around pin hole in the shaft and remove the lower thrust washer.

(c) Push shaft up and remove shaft through top of distributor body.

ASSEMBLING THE DISTRIBUTOR

(Refer to Fig. 4)

(1) Test operation of governor weights and inspect weight springs for distortion.

(2) Lubricate governor weights.

(3) Inspect all bearing surfaces and pivot pins for roughness, binding or excessive looseness.

(4) Lubricate and install upper thrust washer (or washers) on the shaft and slide the shaft into the distributor body.

(5) If gear is worn or damaged, replace as follows:

(a) Install lower thrust washer and old gear on lower end of shaft and temporarily install rollpin.

(b) Scribe a line on the end of shaft from center to edge, so line is centered between two gear teeth as shown in Figure 5. **Do not Scribe completely across the shaft.**

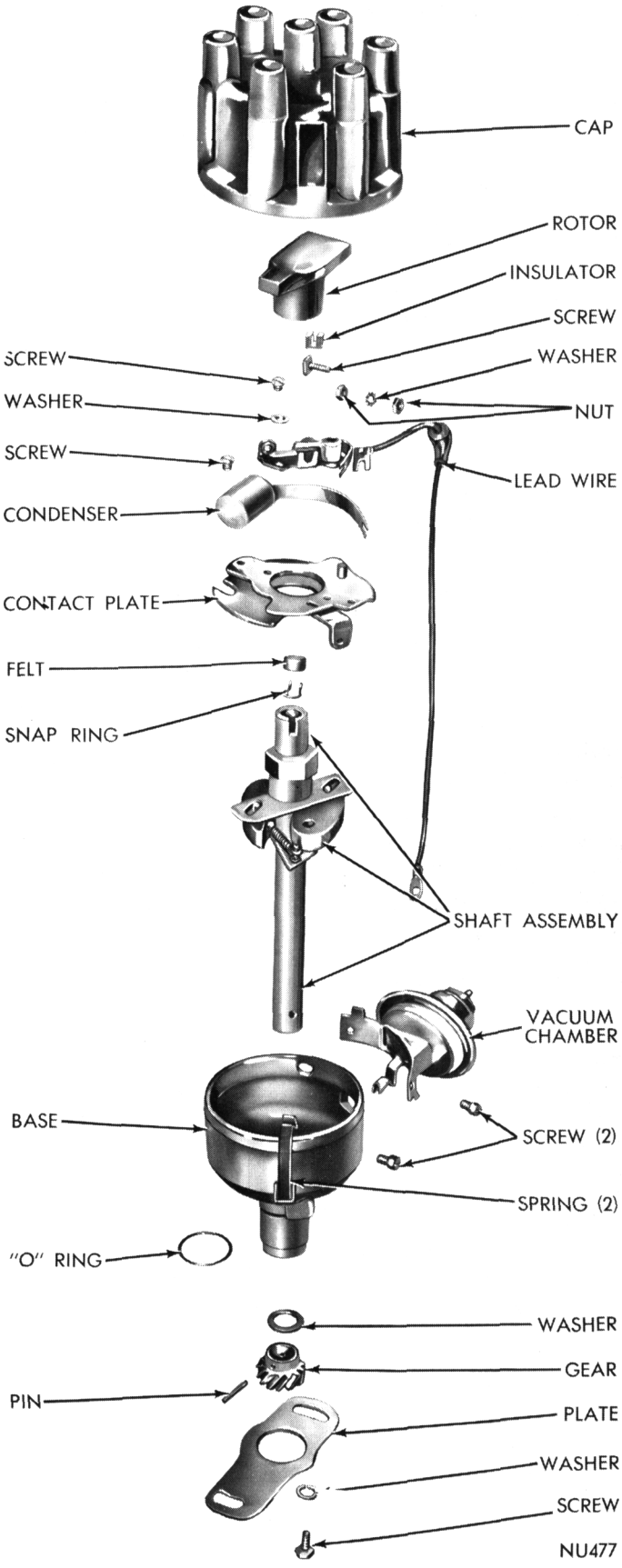

Fig. 4—Distributor Disassembled View

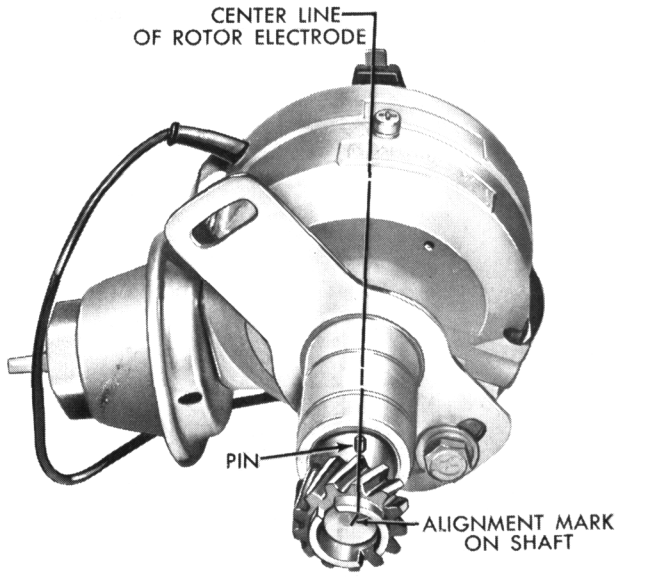

Fig. 5—Scribe Line on Distributor Shaft

(c) Remove rollpin and gear. Use a fine file to clean burrs from around pin hole.

(d) Install new gear with thrust washer in place with hole in gear rotated approximately 90 degrees from old hole in shaft and with scribed line centered between the two gear teeth as shown. **If it appears that the new pin hole may interfere with the shaft oil groove, rotate gear to the centerline of the next pair of gear teeth, aligning again with scribe mark on the end of shaft.**

(e) Before drilling through shaft and gear, place a .007 feeler gauge between gear and thrust washer and after again observing that the centerline between two of the gear teeth is in line with centerline of rotor electrode (Fig. 6) drill a .124-.129 inch hole and install the rollpin.

CAUTION: Support hub of gear when installing roll pin so that gear teeth will not be damaged.

(6) Install contact plate assembly, align the condenser lead, movable contact spring, primary lead, and install attaching screws.

(7) Attach vacuum advance unit arm to the contact plate.

(8) Install vacuum unit attaching screws and washers.

(9) Test contact arm spring tension.

(10) Adjust contact cap.

(11) Lubricate the felt pad in top of distributor cam with 1 drop of light engine oil and install the rotor.

TESTING CONTACT ARM SPRING TENSION

(1) Hook a spring scale MTU-36 on contact arm and pull in a straight line at a right angle to the contact surfaces (Fig. 7). Take a reading as contacts start to separate under slow and steady pull of the scale.

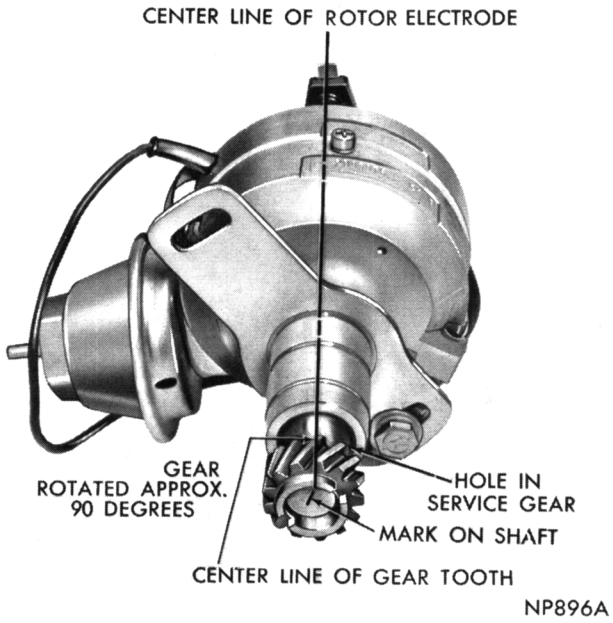

Fig. 6—Aligning Gear Teeth with Centerline of Rotor Electrode

Spring tension should be 17 to 20 ounces. If reading is outside these limits, loosen the screw which holds the end of contact arm spring, and slide end of spring in or out, as necessary.

(2) Tighten screw and measure spring tension. **Just the right amount of contact spring tension is very important for effective ignition and efficient engine performance. Spring tension that is too great, will cause excessive wear on distributor cam and on the nylon block of the movable contact arm. Spring tension that is too weak, is unable to keep the contacts in contact with each other when they close. This is particularly true as engine speed is increased, causing high-speed misfiring.**

DISTRIBUTOR CONTACTS

Contact Wear

Contacts which have undergone several thousand miles of operation will have a rough surface, but this should not be interpreted as meaning that contacts are worn out. If the contact area has a gray color and roughness between the contacts matches so that a large contact area is maintained, the contacts will continue to provide satisfactory service.

However, if the contact area is oily, mottled or dark in color, or is badly pitted, the contacts will soon become unsatisfactory for further operation. Not only must they be replaced, but the ignition system and engine must be checked to determine the cause of the trouble so it can be eliminated. **Unless the condition causing contact burning or excessive pitting is corrected, new contacts will provide no better service than the old contacts.**

Burning of Contacts

Contact burning will result from high primary voltage, presence of oil or other foreign material, defective condenser and improper contacts adjustment. High voltage causes an excessively high current flow through the contacts which burns them rapidly. High voltage can result from an improperly adjusted or inoperative voltage regulator.

Oil or crankcase vapors which work up into the distributor and deposit on the contact surfaces will cause them to burn rapidly. This is easy to detect since the oil produces a smudgy line under the contacts. Clogged engine breather pipes permit crankcase pressure to force oil or vapors up into the distributor. Over-oiling of the distributor will also cause burning.

If contact opening is too small (cam angle too large), arcing will occur between the contacts resulting in low secondary voltage and engine miss.

High series-resistance in the condenser circuit will prevent normal condenser action so the contacts will burn rapidly. This resistance may be caused by a loose condenser mounting or lead connection, or by poor connections inside the condenser.

Pitting of Contacts

Contact pitting results from the transfer of material from one contact to the other so that a tip builds up on one contact while a pit forms in the other.

A small amount of pitting in several thousand miles

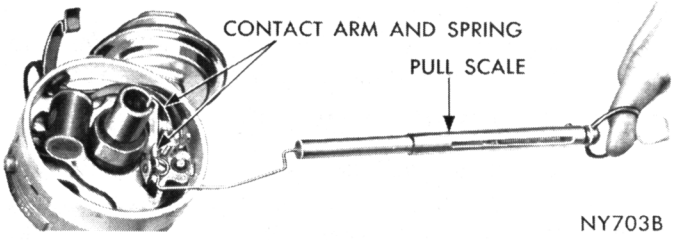

Fig. 7—Testing Contact Arm Tension Spring

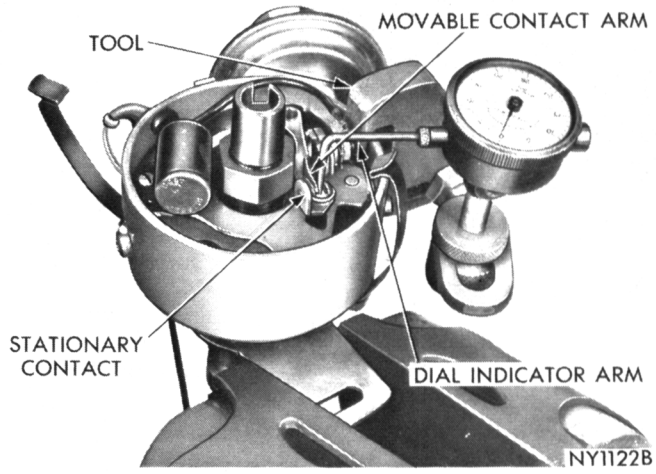

Fig. 8—Adjusting Contact Clearance with Indicator

is normal and does not affect the distributor operation. However, excessive pitting such as long sharp spikes is harmful and causes arcing and voltage loss. Contacts with this condition should be replaced.

Excessive pitting can be due to too small a contact opening, high primary voltage or wrong condenser capacity. Inspect to be certain the condenser capacity is within the specified range of .25 to .285 MFD; contact spring tension should be 17 to 20 ounces and contact gap should be .017 to .023 inch.

INSTALLING AND ALIGNING CONTACTS

(1) Loosen the terminal screw nut, and remove primary lead and condenser lead.

(2) Remove the stationary contact lock screw and remove the old contact set.

(3) Install a new contact set; the sleeve at one end of the adjustable bracket fits over and pivots on the upper contact plate mounting pin.

(4) Connect the condenser and primary leads.

(5) Align the contacts, if necessary, by bending the stationary contact bracket only. **Never bend** the movable contact arm to obtain alignment.

(6) After aligning the contacts, adjust contact clearance to "Specifications," using dial indicator (Fig. 8). Recheck the contact arm spring tension.

(7) Test the dwell angle to show proper degree of closure. See Paragraph, "Distributor Contact Dwell." The lock screw should be loosened just enough so that the stationary contact bracket can be moved with a slight drag; otherwise, it will be difficult to set the contacts accurately. After setting the contacts to the correct gap, tighten the stationary bracket lock screw.

DISTRIBUTOR LUBRICATION

(1) Lubricate the felt wick under the rotor in top of distributor cam with 1 drop of SAE 10W oil.

(2) Wipe the distributor cam free of dirt and old grease with a clean lintless cloth. Apply a light film of new distributor cam lubricant Number 1473595 or equivalent over the entire cam surface. Lubricant must be able to adhere to the cam surface thereby resisting being thrown from the cam by centrifugal force, must not melt at operating temperatures and must not harden or dry out with age, must not chemically react or be affected by ozone or cause corrosion or pitting of the metal, must possess moisture control properties to prevent rust formation on the cam.

CAUTION: A thin film is all that is required. Do not over-lubricate. Excess grease will be thrown from the distributor cam when engine is running. If this grease strikes the contacts, arcing and burning of contacts will result.

DISTRIBUTOR ADVANCE TESTING

Centrifugal Advance Curve

Carefully mount distributor assembly (less cap and rotor) in a reliable stroboscope-type distributor tester so that gear is not damaged and proceed with tests as follows:

(1) Turn the Tach-Dwell switch to the 6 LOBE position and Motor Switch to correct direction of rotation. Refer to "Distributor Advance Specifications" in this manual.

(2) Turn battery switch "ON."

(3) Regulate tester speed control to operate distributor at 200 distributor rpm.

(4) Align the "O" of distributor tester degree ring with any of the arrow flashes.

(5) Adjust tester speed control to operate distributor at speeds called for under "Specifications" and observe arrow flashes opposite tester degree ring to determine degrees of advance.

(6) If advance is not according to specifications, replace with correct distributor shaft assembly (shaft, cam, yoke, governor weights as complete assembly) or distributor assembly, less cap and rotor.

Vacuum Diaphragm Leak Test

With distributor mounted in Distributor Tester and with vacuum unit attached to distributor, proceed as follows:

(1) Place thumb over end of vacuum pump hose and adjust the regulator control knob to give a reading of 20 inches of vacuum with hose closed off to be sure tester hose does not leak.

(2) Attach tester vacuum pump hose to the tube on vacuum unit. Vacuum gauge should hold on maximum vacuum obtainable if no leaks exist.

(3) Observe breaker plate while performing leak test to test response of the breaker plate. There should be instant response to pull of the diaphragm, moving plate without a drag, bind or jerk in either direction.

(4) If leakage is indicated, replace vacuum unit assembly.

Vacuum Advance Curve

If only the vacuum advance curve is to be checked, connect tester vacuum pump hose to distributor vacuum advance unit and perform operations 1 through 4 under "Centrifugal Advance Curve," then proceed as follows:

(1) Turn tester vacuum pump "ON." Adjust vacuum pump regulator to vacuum test specifications. See "Specifications" and observe arrow flashes on tester degree ring to determine degrees of advance.

(2) If vacuum advance is below or above specifications, replace the vacuum advance unit. Retest vacuum advance curve.

DISTRIBUTOR INSTALLATION

(1) Position distributor on engine. Make certain the rubber "O" ring seal is in the groove of distributor shank.

(2) Carefully engage distributor drive gear with camshaft drive gear so that when distributor is installed properly, rotor will be in line with previously scribed line on cylinder block. **If engine has been cranked while distributor is removed, it will be necessary to establish proper relationship between the distributor shaft and Number 1 piston position as follows:**

(a) Rotate the crankshaft until number one piston is at top of compression stroke. Mark on inner edge of crankshaft pulley should be in line with the "O" (TDC) mark on timing chain case cover.

(b) Rotate rotor to a position just ahead of the number one distributor cap terminal.

(c) Lower the distributor into the opening, engaging distributor gear with drive gear on camshaft. With distributor fully seated on engine, rotor should be under the cap number 1 tower with distributor contacts just separating.

(3) Install the distributor cap (make sure all high tension wires "snap" firmly in the cap towers).

(4) Install hold-down arm screw and tighten finger tight.

(5) Attach primary lead wire to the coil. **Do not connect distributor vacuum hose at this time.**

(6) Connect secondary lead of Power Timing Light to the Number 1 spark plug (using proper adaptor) and red primary lead to the positive terminal of battery with black primary lead to negative battery terminal. **Do not puncture the cable cap nipples or spark plug covers to make a contact. Use proper adapters.**

(7) Start engine and run engine at idle speed.

(8) Rotate distributor housing so that timing mark on crankshaft damper is aligned with specified degree mark on chain case cover. Refer to "Specifications" (Moving distributor housing counter-clockwise advances timing and clockwise retards timing).

(9) Tighten distributor hold down arm screw after timing has been set and recheck timing adjustment with a Power Timing Light.

(10) When timing is correct, connect vacuum hose to the distributor.

(11) Remove Power Timing Light from engine.

IGNITION COIL

The ignition coil is designed to operate with an external ballast resistor. When testing the coil for output, include resistor in tests. Inspect the coil for external leaks and arcing.

Test coil according to coil tester Manufacturer's instructions. Test coil primary resistance. Test ballast resistor resistance. Test coil secondary resistance. Replace any coil or ballast resistor that does not meet specifications.

Every time an ignition coil is replaced because of a burned tower, carbon tracking, or any evidence of arcing at the tower, the nipple or boot on the coil end of the secondary cable, replace cable. Any arcing at the tower will carbonize the nipple so that placing it on a new coil will invariably cause another coil failure.

If secondary cable shows any signs of damage, cable should be replaced with a new cable with a neoprene nipple since the old cable can cause arcing, and therefore, ruin a new coil.

BALLAST RESISTOR

The ballast resistor is a compensating resistance in the ignition primary circuit. During low speed operation, when primary circuit current flow is high, ballast resistor temperature rises, increasing resistance. This reduces current flow, thereby prolonging ignition contact life. At high speed operation, when primary current flow is low, the ballast resistance cools off allowing more current flow, which is required for high speed operation. During starter operation, the ballast resistor is bypassed, allowing full battery voltage to ignition primary circuit.

IGNITION SYSTEM—8 CYLINDER

INDEX

	Page
Assembling the Distributor	51
Ballast Resistor	56
Contact Arm Spring Tension	53
Distributor Contact Dwell	49
Distributor Contacts	54
Distributor Disassembly	50
Distributor Lubrication	55
Distributor Installation	55
Distributor Removal	50
Distributor Resistance Test	48
Dual Contacts	49
Dwell Variation	49
General Information	47
Idle R.P.M. Test	49
Ignition Coil	56
Ignition Timing	50
Installation and Aligning Contacts	54
Lubrication	55
Secondary Circuit Inspection	47
Service Diagnosis	47
Shaft and Bushing Wear Test	50
Spark Plugs	56
Specifications	103
Testing Distributor Advance	55

GENERAL INFORMATION

The ignition system consists of two separate circuits. The battery, ammeter, ignition switch, ballast resistor, primary winding of the ignition coil, distributor contacts and condenser, vehicle frame, and primary wiring make up the low voltage primary circuit. The secondary high voltage circuit includes the coil secondary winding, distributor cap and rotor, spark plug cables, spark plugs and vehicle frame.

SERVICE DIAGNOSIS

Condition	Possible Cause	Correction
BURNED OR PITTED DISTRIBUTOR CONTACTS	(a) Dirt or oil on contacts.	(a) If oil is on contact face, determine cause and correct condition. Clean distributor cam of dirt and grease, apply a light film of distributor cam lubricant to cam lobes; wipe off excess. See "Distributor Lubrication." Replace contact set and adjust as necessary.
	(b) Alternator voltage regulator setting too high.	(b) Test alternator voltage regulator setting, adjust as necessary. Replace contact set and adjust as necessary.
	(c) Contacts misaligned or gap too small.	(c) Align and adjust contacts.
	(d) Faulty coil.	(d) Test and replace coil if necessary. Replace and adjust contacts.
	(e) Ballast resistor not in circuit.	(e) Inspect conditions, and correctly connect the coil.
	(f) Wrong condenser or faulty condenser.	(f) Test condenser and replace if necessary. Replace and adjust contacts.
	(g) Faulty ignition switch.	(g) Replace ignition switch.
	(h) Bushings worn.	(h) Replace housing*.
	(i) Touching contacts with the hands during installation.	(i) Replace and adjust contacts.
IGNITION COIL FAILURE	(a) Coil damaged by excessive heat from engine.	(a) Replace coil. Inspect condition of the distributor contacts.
	(b) Coil tower carbon-tracked.	(b) Replace the coil.
	(c) Oil leak at tower.	(c) Replace the coil.

* Prestolite—Recondition distributor.

SERVICE PROCEDURES

Secondary Circuit Inspection

Check high tension cable connections for good contact at the coil and distributor cap towers and at the spark plugs. Terminals should be fully seated. The nipples and spark plug covers should be in good condition. Nipples should fit tightly on the coil cap towers and spark plug covers should fit tight around spark plug insulators. Cable connections that are loose will corrode and increase the resistance and permit water to enter the towers causing ignition malfunction. **To maintain proper sealing between the towers and nipples, cable and nipple assemblies should not be removed from the distributor or coil towers unless nipples are damaged or cable testing indicates high resistance or broken insulation.**

Clean high tension cables with a cloth moistened with a non-flammable solvent and wipe dry. Bend cables to check for brittle or cracked insulation.

When testing secondary cables for punctures and cracks with an oscilloscope follow the instructions of the equipment manufacturers.

If an oscilloscope is not available, secondary cables can be tested as follows:

(a) Engine not running, connect one end of a test probe to a good ground, other end free for probing.

(b) Disconnect cable at spark plug end. Insulate cable end from grounding.

(c) With engine running, move test probe along entire length of wire. If punctures or cracks are present there will be a noticeable spark jump from the faulty area to the probe. Secondary coil wire may be checked in the same manner, be sure one spark plug cable is disconnected from spark plug while running probe along coil wire secondary cable. Cracked, leaking or faulty cables should be replaced.

When installing new cable assemblies, install new high tension cable and nipple assembly over cap or coil tower, entering the terminal into the tower, push lightly, then pinch the large diameter of the nipple (Fig. 1) to release trapped air between nipple and

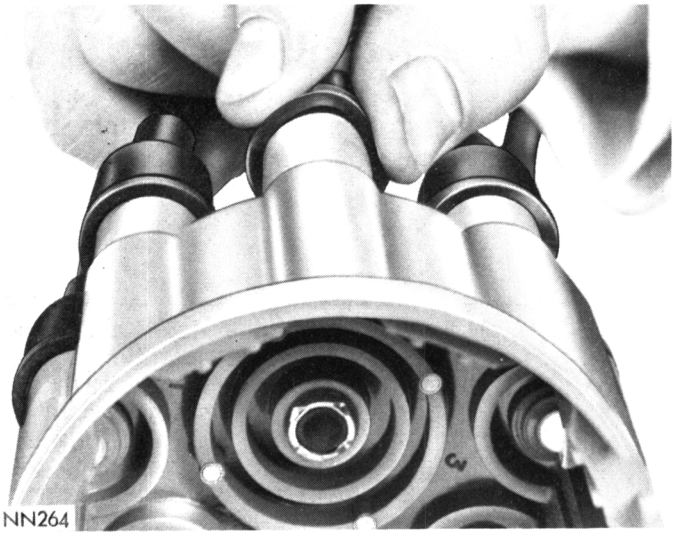

Fig. 1—Installing Secondary Cable and Nipple at Distributor Cap Tower

tower. Continue pushing on the cable and nipple until cables are properly seated in the cap towers. Use the same procedure to install cable in coil tower (Fig. 2).

Use the following procedure when removing the high tension cable from the spark plug. First, remove the cable from the retaining bracket. Then grasp the insulator as close as possible to the spark plug and use a straight and steady pull (Fig. 3). **Do not use pliers and do not pull the cable at an angle.** Doing so will damage the insulation, cable terminal or the spark plug insulator. **Wipe spark plug insulator clean before reinstalling cable and cover.**

Resistance type cable is identified by the words "Electronic Suppression" printed on the cable jacket. No additional resistors are necessary.

Use an ohmmeter to check resistance type cable for open circuits, loose terminals or high resistance as follows:

(a) Remove cable from spark plug and install the proper adapter between cable and spark plug.

(b) Lift distributor cap from distributor with cables

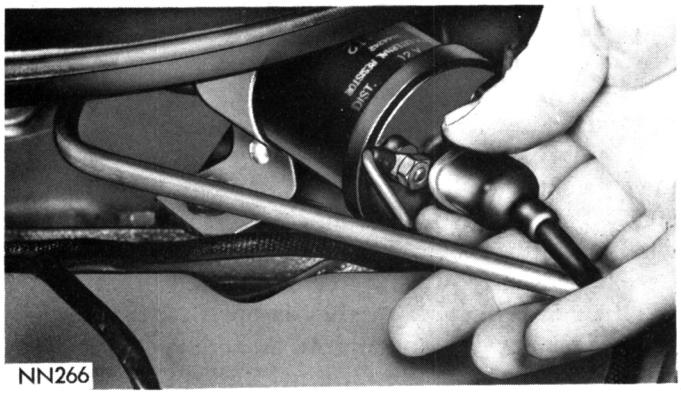

Fig. 2—Installing Secondary Cable and Nipple at Coil Tower

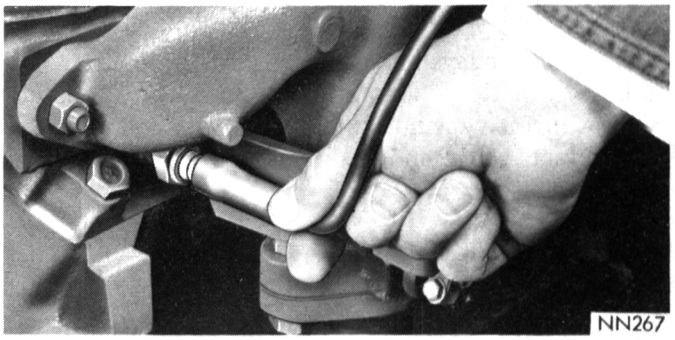

Fig. 3—Removing Secondary Cable and Cover from Spark Plug (Typical)

intact. **Do not remove cables from cap.**

(c) Connect the ohmmeter between spark plug adapter and the corresponding electrode inside the cap, making sure ohmmeter probes are in good contact. If resistance is more than 30,000 ohms, remove cable at cap tower and check the cable resistance. If resistance is more than 30,000 ohms, replace cable assembly. Test all spark plug cables in same manner.

To test coil to distributor cap high tension cable, remove distributor cap with the cable intact. **Do not remove cable from the coil or cap.** Connect the ohmmeter between center contact in the cap and either primary terminal at coil. If the combined resistance of coil and cable is more than 25,000 ohms, remove the cable at coil tower and check cable resistance. If resistance is more than 15,000 ohms, replace the cable. If resistance is less, check for a loose connection at the tower or for a faulty coil.

Inspect coil tower for cracks, carbon tracking or oil leaks.

DISTRIBUTOR RESISTANCE TEST

This test indicates the resistance of the ignition primary circuit from the distributor side of the coil, through the points and the distributor ground. Excessive resistance in this portion of the ignition system will prevent the coil from producing sufficient output for good over-all ignition. To perform test, proceed as follows:

(1) Turn Selector Switch of a Tach-Dwell unit to CALIBRATE position and adjust Dwell Calibrator until Dwell Meter reads on the set line (test leads separated).

(2) Leave Selector Switch in CALIBRATE position, connect Tach-Dwell red lead to distributor terminal of coil and black lead to a good ground.

(3) Turn ignition switch "ON." Observe dwell meter reading. Meter pointer should be well within bar marked "DISTRIBUTOR RESISTANCE." If reading is zero or outside of bar, crank engine with the starter until meter pointer moves as far to right as possible. (This will indicate that contacts are closed.)

A reading now within the bar indicates a normal distributor primary circuit.

If reading is outside the bar, high resistance is present in distributor primary circuit.

(4) Remove test lead from distributor terminal of coil and connect to the following points:

(a) Distributor primary terminal (outside).

(b) Distributor primary terminal (inside).

(c) Contact terminal bracket (insulated bracket).

(d) Ground side of the contacts.

(e) Distributor housing.

(5) Repeat test at each connection until a noticeable change occurs in the meter reading. If a poor connection or faulty lead is indicated, clean, tighten or replace as necessary and repeat test (3).

If faulty contacts are indicated remove distributor for complete inspection, service, testing and calibration.

IDLE RPM TEST

Engine idle rpm setting should be tested and recorded as it is when the vehicle is first brought into the shop for testing. This will assist in diagnosing complaints of engine stalling, creeping and hard shifting on vehicles equipped with automatic transmissions.

Test procedures are as follows:

(1) Turn Selector Switch to CALIBRATE position and adjust Dwell Calibrator until Dwell Meter reads on SET line (test leads separated).

(2) Connect red lead of the test unit to distributor primary terminal at coil and black lead to a good ground.

(3) Turn Selector Switch to 8 LOBE position.

(4) Turn the Tach-Dwell RPM Switch to the 1000 rpm position.

(5) With engine at normal operating temperature (off fast idle), momentarily open the throttle and release to make sure there is no bind in the linkage and that idle speed screw is against its stop.

(6) Note engine RPM on 1000 RPM scale and adjust carburetor idle speed to specifications. See "Fuel System" specifications.

DISTRIBUTOR CONTACT DWELL

The degrees of distributor dwell are the degrees of rotation through which the contacts remain closed. This is also commonly referred to as "dwell angle" or "cam angle."

The correct distributor point dwell is essential for good ignition performance and contact point life.

Test procedures are as follows:

(1) Disconnect vacuum line.

(2) Connect Tach-Dwell red lead to distributor terminal of coil and black lead to a good ground.

(3) Turn Selector Switch to 8 LOBE position.

(4) Start engine and operate engine at idle speed.

(5) Observe dwell meter reading. If the dwell reading is within "Specifications" the contact gap, cam rubbing block and contact arm are all in satisfactory condition.

If dwell reading is not within specifications, incorrect contact gap, worn cam, worn rubbing block or distorted contact arm may be indicated.

DUAL CONTACTS

Block one set of contacts with a clean insulator and adjust the opposite set of contacts to specifications using the dwell meter. **Loosen stationary contact lock screw just enough, so stationary contact can be moved with a slight drag; otherwise it will be difficult to set contacts accurately.**

When one set of contacts has been adjusted for correct clearance tighten stationary contact lock screw.

Block adjusted set of contacts with an insulator and adjust remaining set of contacts in the same manner as the first set. Remove insulator and recheck tightness of stationary contact lock screw.

If contacts have been properly adjusted the dwell should be as specified for two contact sets.

DWELL VARIATION

This test indicates the mechanical condition of the distributor. Excessive wear in distributor mechanical parts cause dwell variations which will affect ignition timing.

Test procedures are as follows:

(1) With engine at idle speed, **vacuum hose disconnected,** and test leads connected as in "Contact Dwell Test," turn Tach-Dwell RPM Switch to the 5,000 RPM position.

(2) Slowly increase engine speed to 1500 RPM then slowly reduce to idle speed while observing dwell meter reading.

If dwell reading varies more than 2 degrees from initial reading between idle speed and 1500 RPM, probable wear in the distributor shaft, bushings or contact plate bearing and pivot pin is indicated. Remove distributor for complete inspection and testing on a distributor tester. **Dwell variation at speeds above 1500 does not necessarily indicate distributor wear. Dwell and gap of the contacts must both be within their specified limits at the same time. If this cannot be accomplished, it is probable that wrong contacts are installed or the rubbing block or cam lobes are badly worn or movable contact is distorted.**

IGNITION TIMING

To obtain maximum engine performance, the distributor must be correctly positioned on the engine to give proper ignition timing.

The ignition timing test will indicate the timing of the spark at No. 1 cylinder at idle (only).

Test procedures are as follows:

(1) Disconnect vacuum hose at distributor.

(2) Connect secondary lead of Power Timing Light to No. 1 spark plug, red primary lead to positive terminal of battery and black primary lead to negative battery terminal. **Do not puncture cables, boots or nipples with test probes. Always use proper adapters. Puncturing the spark plug cables with a probe will damage the cables. The probe can separate the conductor and cause high resistance. In addition breaking the rubber insulation may permit secondary current to arc to ground.**

(3) Start engine and set idle to "Specifications" (Transmission in Neutral).

(4) Loosen distributor hold-down arm screw just enough so distributor housing can be rotated in its mounting.

(5) Aim Power Timing Light at timing plate on chain case cover. If light flash occurs when timing mark on vibration damper is located ahead of specified degree mark on timing plate in the direction of engine rotation, timing is advanced. To adjust, turn distributor housing in direction of rotor rotation.

If flash occurs when the vibration timing mark is located past the specified degree mark in the direction of engine rotation, timing is retarded. To adjust, turn distributor housing against direction of rotor rotation. Refer to "Specification." (Moving the distributor housing against shaft rotation advances timing and with shaft rotation retards timing.

(6) Tighten distributor hold-down arm screw after timing has been set and recheck timing adjustment with a Power Timing Light.

(7) When ignition timing is correct, reconnect vacuum hose to distributor.

Ignition Timing (with C-744 Test Lamp)

(1) Connect C-744 test lamp between distributor primary terminal and battery positive post.

(2) Turn engine until number 6 exhaust valve is just closing; continue turning engine slowly until specified degree mark on the crankshaft pulley is at specified degree mark at timing case cover.

(3) Loosen distributor clamp bolt so distributor housing can be rotated with a slight drag, then turn distributor in the normal rotation until test lamp lights.

(4) Turn distributor against normal distributor rotation until test lamp goes out. **If test lamp lights immediately when connected, turn distributor against normal distributor rotation until light goes out.**

(5) Tighten distributor clamp bolt securely and remove test lamp. If the operation is performed properly the engine is timed to specifications. **If engine is turned beyond the timing mark, continue turning engine for two full revolutions of the crankshaft; this will place the distributor rotor in approximately the initial position.**

CAUTION: DO NOT reverse rotation of the crankshaft, if you have passed the timing mark as this would affect valve timing and distributor timing.

DISTRIBUTOR REMOVAL

(1) Disconnect vacuum hose at distributor.

(2) Disconnect primary lead wire at coil.

(3) Unfasten distributor cap retaining clips and lift off distributor cap.

(4) Scribe a mark on the edge of distributor housing to indicate position of the rotor as reference when reinstalling distributor.

(5) Remove distributor hold-down clamp screw and clamp.

(6) Carefully lift distributor from engine.

SHAFT AND BUSHING WEAR TEST

(1) Remove distributor rotor.

(2) Disconnect primary lead wire at distributor terminal. DO NOT LOOSEN inner nut that holds movable contact arm tension spring to terminal post.

(3) Clamp the ribbed section of distributor housing lightly in a vise equipped with soft jaws and attach dial indicator to body of distributor with the indicator plunger arm resting against movable contact arm at the rubbing block and with the rubbing block of contact arm on the highest point of cam lobe (Fig. 4).

(4) Place one end of a wire loop around the top of distributor shaft. Hook a spring scale in the other end of wire loop and pull on a line with the plunger of indicator gauge. Be sure wire loop on shaft end is down on the shaft to insure a straight pull and also that wire loop does not interfere with indicator or holding bracket. Apply a five pound pull and read the movement of plunger on indicator dial. (Be sure rubbing block of contact arm is on highest point of the cam lobe during this test.) If plunger movement exceeds .006 inch, replace bushings and/or distributor shaft, see "Distributor Disassembly."

DISTRIBUTOR DISASSEMBLY (Figs. 5 and 6)

(1) Remove distributor rotor. **The distributor cap clamp springs on Chrysler built distributors are held**

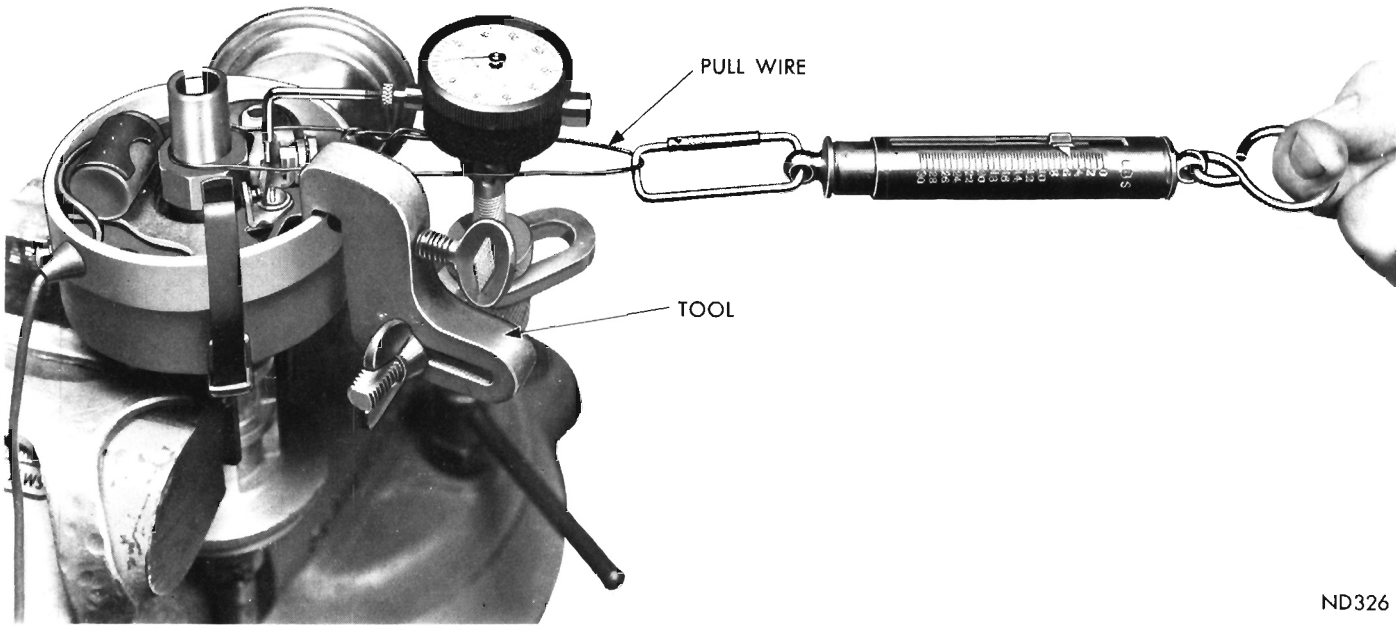

Fig. 4—Shaft and Bushing Wear Test (Typical)

in place by peened metal around the openings and should not be removed.

(2) Remove the retainer attaching vacuum advance unit to the contact plate advance arm (Prestolite).

(3) Remove the two screws and lockwashers attaching vacuum advance unit to distributor housing and remove the advance unit.

(4) Remove primary lead wire and rubber grommet as an assembly. Push grommet towards inside of distributor to remove. **Do not pull on the wire.**

(5) Remove two screws, and lockwashers attaching the contact plate to housing and lift out the contact plate, contacts and condenser as an assembly.

(6) Remove oil wick from the distributor cam well. Remove spring clip from oil well in cam and remove cam and yoke assembly and spacer (Prestolite).

(7) If side play exceeded .006 inch in "Shaft and Bushing Wear Test," (Chrysler Built distributors) replace housing and bushings or shaft and cam assembly as necessary. Prestolite distributors replace bushing and/or distributor shaft as follows:

(a) Remove distributor drive collar retaining pin and slide collar off end of shaft.

(b) Use a fine file to clean burrs from around pin hole in the shaft and remove lower thrust washer.

(c) Push shaft up and remove it through the top of distributor body. Remove upper thrust washer.

(d) Remove shaft oiler and lift out oiler wick.

(e) Place housing in an arbor press and press out upper and lower bushings from bottom of housing using Driver Tool C-3041 (Fig. 7).

(f) Soak new bushings in light engine oil for approximately 15 minutes.

(g) Position new upper bushing with hole in bushing **up** and in line with oil hole in housing, then press bushing into distributor housing with Tool C-3041 and tool adapter until adapter bottoms on housing. The bushing will measure .094 inch below the top of the housing bore (Fig. 8). Place a straight-edge on machined surface of housing and measure from bottom face of straight-edge to the top of the bushing. Invert housing and install other bushing flush with the face of distributor base (Fig. 9).

(h) Insert a 3/32 inch rod through housing oiler hole to see if the hole in bushing indexes with oiler hole in the housing. If rod cannot be inserted through the housing and bushing, drill a 1/8″ hole through the upper bushing by drilling through the oil wick hole. Remove burrs caused by drilling operation.

(i) Install burnishing tool part of C-3041 tool set and force the burnisher through both bushings (Fig. 10). Correct bushing inside diameter is .4995 to .5000 inch.

ASSEMBLING THE DISTRIBUTOR

(1) Test operation of governor weights and inspect weight springs for distortion. Lubricate governor weights.

(2) Inspect all bearing surfaces and pivot pins for roughness, binding or excessive looseness.

(3) Install cam spacer, chamfered end down on distributor shaft, (Prestolite only).

(4) Slide cam and yoke on distributor shaft, engage weight lugs with slots in the yoke. Install cam retaining spring clip. Be sure it is properly seated in the groove of distributor shaft, (Prestolite only).

(5) Lubricate and install flat thrust washer. Posi-

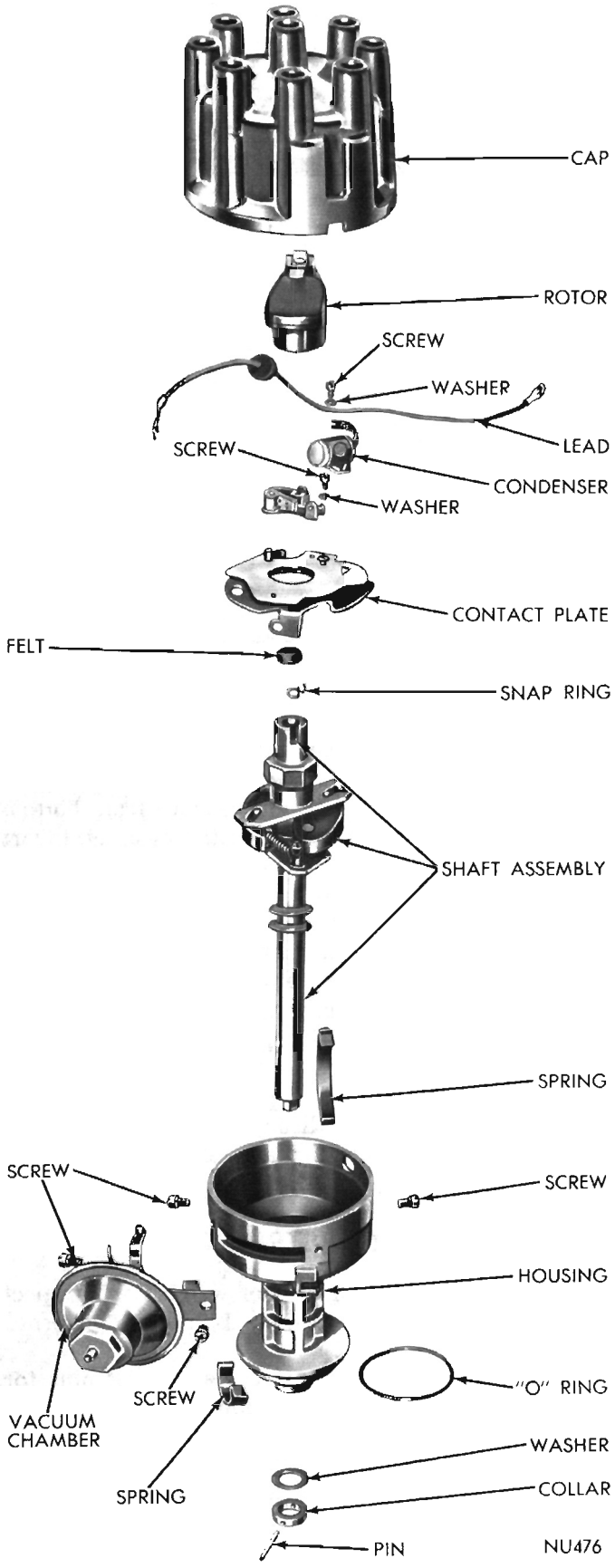

Fig. 5—Distributor—(Disassembled View)—Chrysler Built

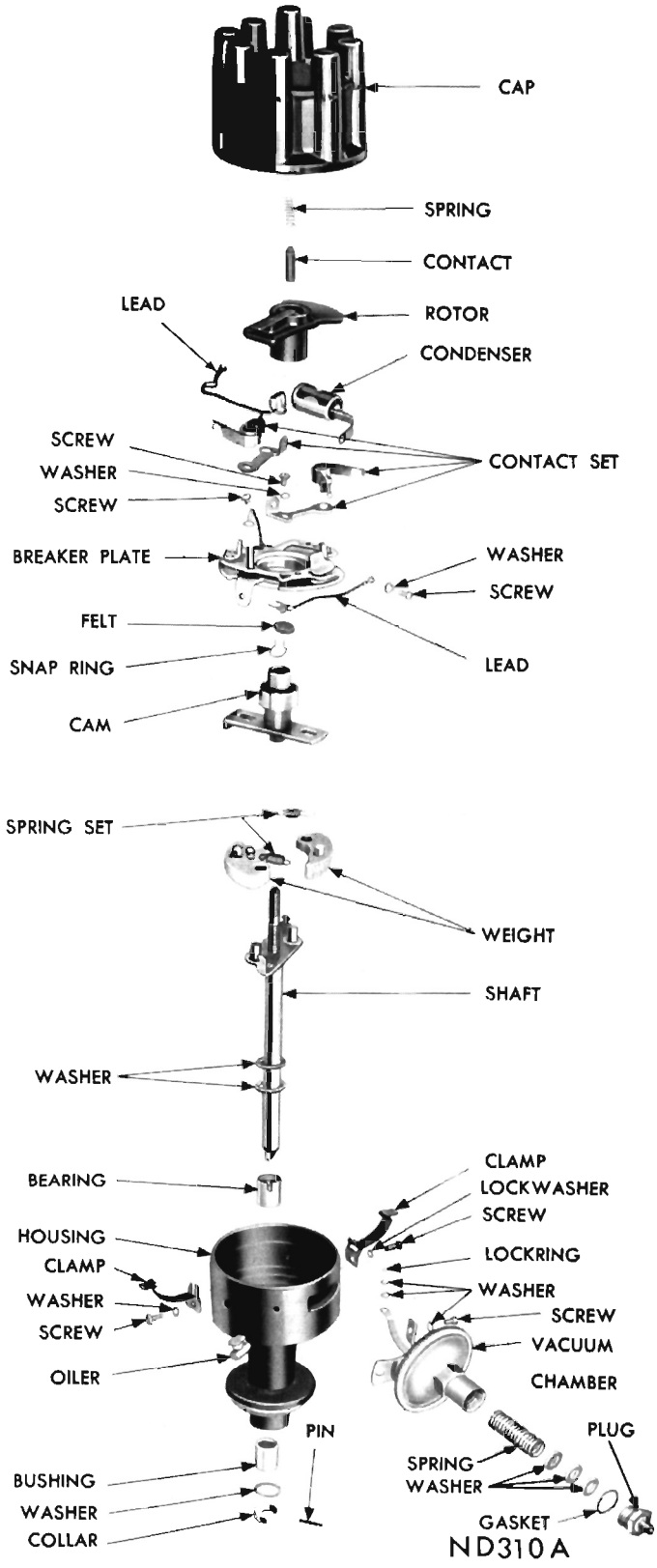

Fig. 6—Distributor (Disassembled View)—Prestolite

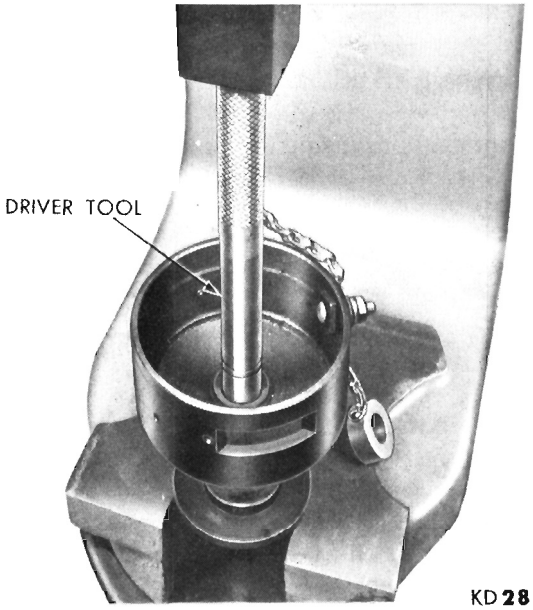

Fig. 7—Removing Distributor Drive Shaft Bushings

tion washer on distributor shaft and slide shaft into distributor body. Position lower thrust washer and drive the collar on the lower end of shaft. Install retainer pin.

(6) Install oiler wick and oiler, (Prestolite only).

(7) Install contact plate assembly. Align condenser lead, contact point spring, primary lead and install attaching screw.

(8) Install felt wick in the top of distributor cam.

(9) Attach vacuum advance unit arm to contact plate and install the retainer (Prestolite only). Install vacuum unit attaching screws and washers.

(10) Test contact arm spring tension, and adjust contact gap.

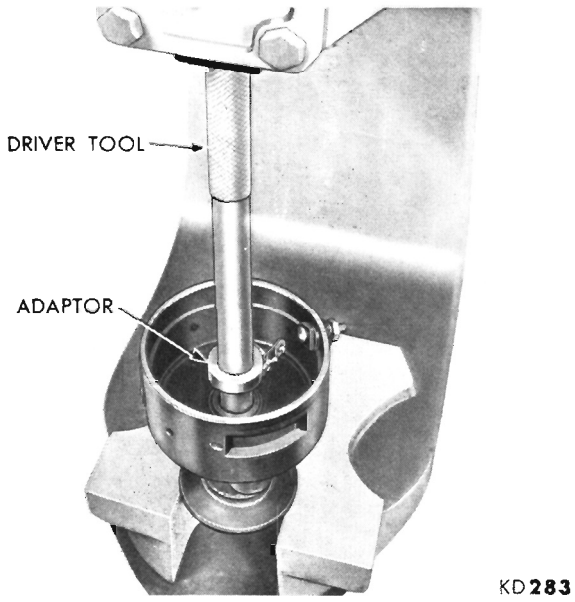

Fig. 8—Installing Upper Bushing

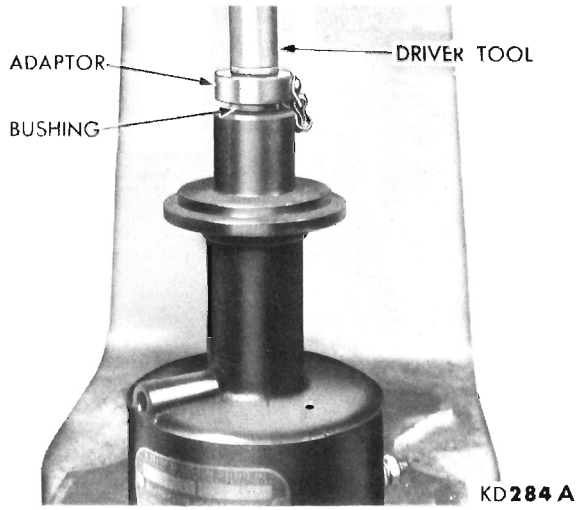

Fig. 9—Installing Lower Bushing

(11) Lubricate felt pad in the top of distributor cam with 1 drop of light engine oil and install rotor.

CONTACT ARM SPRING TENSION

(1) Hook a spring scale Tool MTU-36 on the breaker arm and pull in a straight line at a right angle to the contact surfaces (Fig. 11). Take a reading as the contacts start to separate under the slow and steady pull of the scale. Spring tension should be as shown in specifications. If the reading is outside these limits, loosen the screw which holds the end of the contact arm spring, and slide the end of the spring in or out, as necessary.

(2) Tighten the screw and measure the spring tension. **Just the right amount of contact spring tension is very important for effective ignition and efficient engine performance. Spring tension that is too great, will cause excessive wear on the distributor cam and on the nylon block of the movable contact**

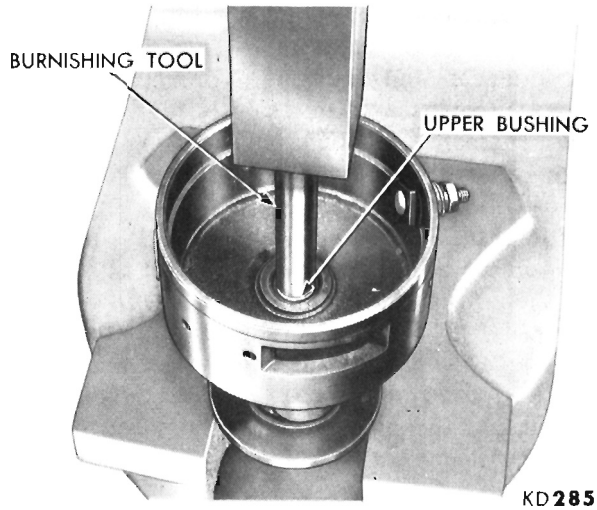

Fig. 10—Burnishing Distributor Drive Shaft Bushings

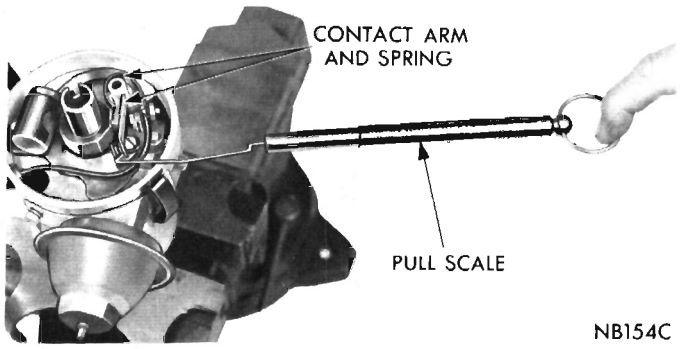

Fig. 11—Testing Contact Arm Spring Tension

arm. Spring tension that is too weak, is unable to keep the contacts in contact with each other when they close. This is particularly true as engine speed is increased, causing high-speed misfiring.

DISTRIBUTOR CONTACTS

Contact Wear

Contacts which have undergone several thousand miles of operation will have a rough surface, but this should not be interpreted as meaning that the contacts are worn out. If the contact area has a gray color and the roughness between the contacts matches so that a large contact area is maintained, the contacts will continue to provide satisfactory service.

However, if the contact area is oily, mottled or dark in color, or is badly pitted, the contacts will soon become unsatisfactory for further operation. Not only must they be replaced, but the ignition system and engine must be checked to determine the cause of the trouble so it can be eliminated. **Unless the condition causing contact burning or excessive pitting is corrected, new contacts will provide no better service than the old contacts.**

Burning of Contacts

Contact burning will result from high primary voltage, presence of oil or other foreign material, defective condenser and improper contacts adjustment. High voltage causes an excessively high current flow through the contacts which burns them rapidly. High voltage can result from an improperly adjusted or inoperative voltage regulator.

Oil or crankcase vapors which work up into the distributor and deposit on the contact surfaces will cause them to burn rapidly. This is easy to detect since the oil produces a smudgy line under the contacts. Clogged engine breather pipes permit crankcase pressure to force oil or vapors up into the distributor. Over-oiling of the distributor will also cause burning of the contacts.

If the contact opening is too small (cam angle too large), arcing will occur between the contacts resulting in low secondary voltage and engine miss.

High series-resistance in the condenser circuit will prevent normal condenser action so the contacts will burn rapidly. This resistance may be caused by a loose condenser mounting or lead connection, or by poor connections inside the condenser.

Pitting of Contacts

Contact pitting results from the transfer of material from one contact to the other so that a tip builds up on one contact while a pit forms in the other.

A small amount of pitting in several thousand miles is normal and does not affect the distributor operation. However, excessive pitting such as long sharp spikes is harmful and causes arcing and voltage loss. Contacts with this condition should be replaced.

Excessive pitting can be due to too small a contact opening, high primary voltage or wrong condenser capacity. Inspect to be certain the condenser capacity is within the specified range of .25 to .285 MFD; contact spring tension should be 17 to 20 ounces Chrysler built, (17 to 21.5 ounces Prestolite.) Contact gap should be .014 to .019 inch.

INSTALLING AND ALIGNING CONTACTS

(1) Loosen terminal screw nut, and remove primary lead and condenser lead.

(2) Remove stationary contact lock screw and remove old contact set.

(3) Install a new contact set; the sleeve at one end of adjustable bracket fits over and pivots on upper contact plate mounting pin.

(4) Connect condenser and primary leads.

(5) Align contacts, if necessary, by bending stationary contact bracket only. **Never bend** movable contact arm to obtain alignment.

(6) After aligning contacts, adjust contact clearance to "Specifications," using dial indicator (Fig. 12). Recheck contact arm spring tension.

(7) Test dwell angle to show proper degree of clo-

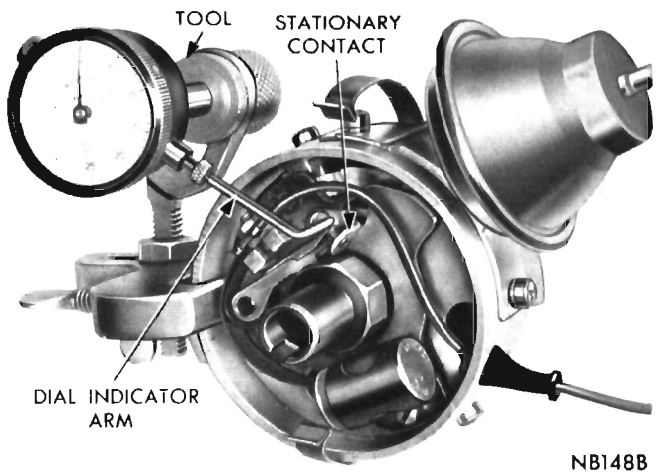

Fig. 12—Adjusting Contact Clearance with Indicator

sure. See Paragraph, "Distributor Contact Dwell." The lock screw should be loosened just enough so stationary contact bracket can be moved with a slight drag; otherwise, it will be difficult to set contacts accurately. After setting contacts to the correct gap, tighten stationary bracket lock screw.

DISTRIBUTOR LUBRICATION

(1) Add 3 drops of SAE 10W oil to the oiler on outside of distributor base, (Prestolite only).

(2) Lubricate felt wick under the rotor in top of distributor cam with 1 drop of SAE 10W oil.

(3) Wipe the distributor cam free of dirt and old grease with a clean lintless cloth. Apply a light film of new distributor cam lubricant Number 1473595 or equivalent over the entire cam surface. Lubricant must be able to adhere to the cam surface thereby resisting being thrown from the cam by centrifugal force, must not melt at operating temperatures and must not harden or dry out with age, must not chemically react or be affected by ozone or cause corrosion or pitting of the metal, must possess moisture control properties to prevent rust formation on the cam.

CAUTION: A thin film is all that is required. Do not over-lubricate. Excess grease will be thrown from the distributor cam when engine is running. If this grease strikes the contacts, arcing and burning of contacts will result.

TESTING DISTRIBUTOR ADVANCE

Centrifugal Advance Curve

Mount distributor assembly (less cap and rotor) in a reliable stroboscope-type distributor tester and proceed with tests as follows: **Clamp around ribbed section of distributor housing. The bottom section of distributor housing is not a machined surface and concentricity would be affected, causing a wobble.**

(1) Turn Tach-Dwell switch to 8 "LOBE" position and Motor Switch to correct direction of rotation. Refer to "Distributor Specifications" in this manual.

(2) Turn battery switch "ON."

(3) Regulate tester speed control to operate distributor at 200 distributor rpm.

(4) Align the "O" of the distributor tester degree ring with any one of the arrow flashes.

(5) Adjust tester speed control to operate distributor at speeds called for under "Specifications" and observe arrow flashes opposite tester degree ring to determine degrees of advance.

(6) If advance is not according to specifications, replace with a new distributor shaft with correct calibration (shaft, cam, yoke, governor weights and springs as an assembly) or with a new distributor assembly, less cap and rotor.

For Prestolite distributors corrections can be attempted by bending the primary and secondary spring tabs on the cam yoke to increase or decrease spring tension.

DO NOT attempt calibration of Chrysler built distributors.

Vacuum Diaphragm Leak Test

With distributor mounted in distributor tester and with vacuum unit attached to distributor, proceed as follows:

(1) Place thumb over end of vacuum pump and hose and adjust regulator control knob to give a reading of 20 inches with hose closed off to be sure tester hose does not leak.

(2) Attach tester vacuum pump hose to the tube on the distributor vacuum unit. The vacuum gauge should hold on maximum vacuum obtainable if no leak exists.

(3) Observe contact plate while performing leak test to test response of contact plate. There should be instant response to the pull of the diaphragm, moving the plate without a drag or bind.

(4) If leakage is indicated, replace vacuum unit assembly.

Vacuum Advance Curve

Connect tester vacuum pump hose to the distributor vacuum advance unit and perform operations 1 through 4 under "Centrifugal Advance Curve." Then proceed as follows:

(1) Turn tester vacuum pump "ON." Adjust vacuum pump regulator to vacuum test specifications. See "Specifications" and observe arrow flashes on tester degree ring to determine degrees of advance.

(2) If vacuum advance is above or below specifications, replace vacuum advance unit. Retest vacuum advance curve.

DISTRIBUTOR INSTALLATION

(1) Position distributor on engine. Align rotor with marks previously scribed on distributor housing. **Clean top of cylinder block to insure a good seal between distributor base and block.**

(2) Engage tongue of distributor shaft with slot in distributor and oil pump drive gear. **If engine has been cranked while distributor is removed, it will be necessary to establish the proper relationship between distributor shaft and NO. 1 piston position as follows:**

(a) Rotate crankshaft until number one piston is at top of compression stroke.

(b) Rotate rotor to the position of number one distributor cap terminal.

(c) Lower distributor into the opening, connect primary lead and install distributor cap. Make sure all high tension wires "snap" firm in cap towers. Install distributor hold-down clamp screw. Tighten screw finger tight.

(d) Connect secondary lead of a Power Timing Light to NO. 1 spark plug (using proper adapter). Connect red primary lead to positive terminal of battery and black primary lead to negative battery terminal.

(e) Start and operate engine at idle speed. Rotate distributor housing so that specified timing mark and pointer are in alignment (Moving the distributor housing against shaft rotation advances timing and with shaft rotation retards timing).

(f) Tighten distributor clamp screw after timing has been set and recheck timing adjustment with a Power Timing Light.

(g) If timing is correct, connect vacuum hose to distributor and remove timing light from engine.

IGNITION COIL

The ignition coil is designed to operate with an external ballast resistor. When testing the coil for output, include resistor in tests.

Inspect coil for external leaks and arcing. Always make two tests when testing the coil. One when the coil is cold, the other after the coil has been warmed up.

Test coil according to coil tester Manufacturer's instructions. Test coil primary resistance. Test ballast resistor resistance. Test coil secondary resistance. Replace any coil and ballast resistor that does not meet specifications.

Every time an ignition coil is replaced because of a burned tower, carbon tracking or any evidence of arcing at the tower, the nipple or boot on the coil end of the secondary cable, replace cable. Any arcing at the tower will carbonize the nipple so that placing it on a new coil will invariably cause another coil failure.

If the secondary cable shows any signs of damage, the cable should be replaced with a new cable with a neoprene nipple since the old cable can cause arcing, and therefore, ruin a new coil.

BALLAST RESISTOR

The ballast resistor is a compensating resistance in the ignition primary circuit. During low speed operation, when the primary circuit current flow is high, ballast resistor temperature rises, increasing resistance. This reduces current flow, thereby prolonging ignition contact life. At high speed operation, when primary current flow is low, the ballast resistance cools off allowing more current flow, which is required for high speed operation. During starter operation, the ballast resistor is bypassed, allowing full battery voltage to the ignition primary circuit.

SPARK PLUGS

Spark plug appearance or conditions can reflect a wide variety of engine conditions as follows:



Fig. 1—Normal Conditions



Fig. 2—Cold Fouling

Normal Conditions

Normal conditions (Fig. 1). This plug has been running at the correct temperature in a "healthy" engine. The few deposits present will probably be light tan or gray in color with most regular grades of commercial gasoline. Electrode burning will not be in evidence; gap growth will average not more than about .001"/1000 miles. Chances are the plug, as pictured, could be cleaned, the gap electrodes filed, regapped and reinstalled with good results.

Cold Fouling

Cold fouling or carbon deposits (Fig. 2). This dry black appearance is fuel carbon and can be due to over rich fuel-air mixture, possibly resulting from a faulty choke, clogged air cleaner, improper carburetor idle adjustment, or dirty carburetor. However, if only one or two plugs in a set are fouled like this it is a good idea to check for sticking valves or faulty ignition cables. This condition also results from prolonged operation at idle. If the vehicle is operated extensively at idle and low speeds, improved plug service will be obtained by using the next step hotter spark plugs.

Wet Fouling

Wet fouling (Fig. 3) tells you that the plug has drowned in excess oil. In an old engine, suspect worn rings or excessive cylinder wear. Use of a hotter plug may relieve such fouling, but plugs can't take the place of needed engine overhaul. **Remember that "break-in" fouling of new engines may occur before**



Fig. 3—Wet Fouling



Fig. 4—Overheating

normal oil control is achieved. In new or recently overhauled jobs, such fouling plugs can be cleaned and reinstalled.

Overheating

Overheating (Fig. 4) is indicated by a white or light gray insulator which appears "blistered." Electrode gap wear rate will be considerable in excess of .001"/1000 miles. This suggests that a cooler heat range should be used . . . however, over-advanced ignition timing, detonation and cooling system stop-pages can also overheat the **correct** spark plug heat ranges.

Cleaning and Regapping

Carefully clean the spark plugs in an abrasive type cleaner. Use a pin type feeler gauge to check spark plug gap. Reset gaps to .035 inch. **Before setting spark plug gap, file center electrode flat, make adjustment by bending ground (side) electrode, never bend the center electrode.**

When installing spark plugs, tighten to 30 foot-pounds.

EXTERIOR LIGHTING

HEADLIGHTS

INDEX

	Page
Compensating the Aimers	58
General Information	57
Headlight Sealed-Beam Replacement	60
Measuring Headlight Aim	59
Mounting and Adjusting the Aimers	59
Pre-Aiming Instructions	58
Service Diagnosis	57
Switch	See "Instrument Panel"
Testing Aimer Calibration	58
Visual Headlight Adjustment (Without Aimers)	60

GENERAL INFORMATION

Dual Headlight System

The dual headlight system consists of four sealed beam bulbs. The two upper bulbs on Fury and V.I.P. models and the two outboard bulbs on Belvedere and Satellite models are of the two filament type for low and high beam. These bulbs are identified by a numeral (2) molded in the lens. The two lower or inboard bulbs have only one filament and are marked by a numeral (1) molded in the glass.

The bulbs cannot be installed wrong as the mounting lugs for the number one (1) and number two (2) bulbs are offset at different angles.

On high beam, the number 1 bulbs provides the high intensity "reach" down the highway and the off focus filament in the number 2 light provides the "body" light which illuminates the side of the road, ditches, etc. On low beam, only the number two (2) bulbs operate.

Single Headlight System

The single beam system on Valiant models consists of two sealed beam bulbs. The bulbs are the two filament type for low and high beam and are marked by a number 2 molded in the lens.

The low beam is intended for use in congested areas and on highways when meeting other vehicles within a distance of 500 feet. The high beam is intended primarily for distant illumination and for use on the open highway when not meeting other vehicles.

Manual on and off operation is controlled by a switch mounted on the far left of the instrument panel while manual operation of the high-low beam is controlled with a foot operated dimmer switch mounted on the left side of the floor pan.

SERVICE DIAGNOSIS

Condition	Possible Cause	Correction
HEADLIGHTS DIM (engine running above idle)	(a) High resistance in lighting circuit.	(a) Test lighting circuit including ground connection. Make necessary repairs.
	(b) Faulty sealed beam units.	(b) Replace sealed beam units.
	(c) Faulty voltage regulator.	(c) Test voltage regulator and alternator. Make necessary repairs.
LIGHTS FLICKER	(a) Loose connections or damaged wires in lighting circuit.	(a) Tighten connections and check for damaged wiring.
	(b) Light wiring insulation damaged producing momentary short.	(b) Test wiring and replace or tape damaged wires.

Condition	Possible Cause	Correction
LIGHTS BURN OUT FREQUENTLY	(a) High voltage regulator setting.	(a) Adjust voltage regulator.
	(b) Loose connections in light circuit.	(b) Tighten connections.
LIGHTS WILL NOT LIGHT	(a) Discharged battery.	(a) Recharge battery and correct cause.
	(b) Loose connections in lighting circuit.	(b) Tighten connections.
	(c) Burned out lamps.	(c) Replace bulbs or sealed beam unit.
	(d) Open or corroded contacts in headlight switch.	(d) Replace headlight switch.
	(e) Open or corroded contact in dimmer switch.	(e) Replace dimmer switch.
HEADLIGHTS DIM (engine idling or shut off)	(a) Partly discharged battery.	(a) Charge battery.
	(b) Faulty battery.	(b) Test battery. Replace if necessary.
	(c) High resistance in light circuit.	(c) Test headlight circuit including ground connection. Make necessary repairs.
	(d) Faulty sealed beam units.	(d) Replace sealed beam units.
	(e) Corroded battery terminals.	(e) Clean terminals.

SERVICE PROCEDURES

PRE-AIMING INSTRUCTIONS

(1) Test dimmer switch operation.

(2) Observe operation of high beam indicator light mounted in instrument cluster.

(3) Inspect for badly rusted or faulty headlight assemblies. These conditions must be corrected before a satisfactory adjustment can be made.

(4) Place vehicle on a level floor.

(5) Adjust front suspension height as necessary.

(6) Inspect tire inflation.

(7) Rock vehicle sideways to allow vehicle to assume its normal position.

(8) If gasoline tank is not full, place a weight in trunk of vehicle to simulate weight of a full tank (6-1/4 pounds per gallon).

(9) There should be no other load in vehicle other than driver or substituted weight of approximately 150 pounds placed in driver's position.

(10) Remove each headlight trim panel. Do not remove sealed beam retainer rims.

(11) Thoroughly clean headlight lenses.

COMPENSATING THE AIMERS

(1) Place transit on floor in line with vertical centerline of right front wheel (Fig. 1). Place split image target in like position at right rear wheel.

(2) Adjust range screw on transit until target split image coincides or merges into one unbroken line. **Make sure that the line of sight is perpendicular from the eye to the viewing port of the transit and that the target image is centered in viewing port of transit.**

(3) Turn dial on side of transit until bubble in spirit level is centered.

(4) When bubble is centered, note "plus" or "minus" reading on compensator scale. This figure indicates degree of slope of floor and must be transferred to each aimer.

(5) With a screw driver, turn adjusting slot of floor level compensator in each aimer, until correct plus or minus figure (or fractional part) appears in proper window, Fig. 2.

TESTING AIMER CALIBRATION (Fig. 3)

(1) Using carpenter or stone mason level of known accuracy, locate a true vertical plate glass window or smooth surface.

(2) Set **DOWN-UP** pointer on **DOWN 2.**

(3) Set **RIGHT-LEFT** pointer and floor level compensator at "0."

(4) Secure aimers to glass or smooth surface three to five feet apart so split image targets can be located in viewing ports.

(5) If bubble is centered in glass dial, vertical calibration is correct. If bubble is not centered, make **DOWN-UP** adjustment by rotating level adjusting screw until bubble is centered in spirit level.

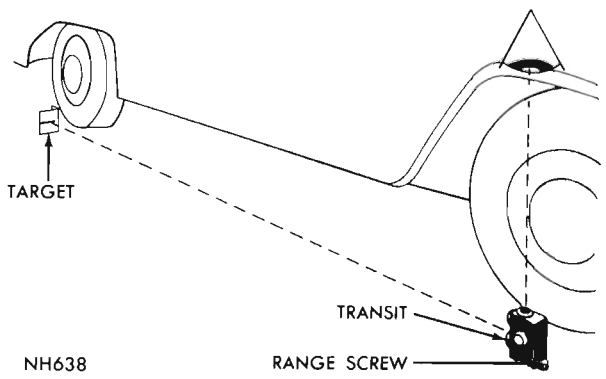

Fig. 1—Determining Slope of Floor



Fig. 2—Adjusting Floor Level Compensators

(6) The horizontal aim is correct if targets on opposite aimers are aligned in viewing ports. If targets are not aligned in viewing ports, rotate mirror adjusting screw until target split image becomes aligned.

MOUNTING AND ADJUSTING THE AIMERS

(1) While holding an aimer in alignment with lens of one headlight on Valiant models or the number (2) lens on Belvedere, Satellite, Fury and VIP models, bring aimer up to and against headlight lens. **Make certain that headlight lens pads are making full contact with aimer mounting flange and that aimer target is facing inboard.**

(2) Push release lever forward (to expel air from suction cup) and while holding aimer firmly against headlight aiming pads, slowly pull release lever back until spring lock engages in the slot, (Fig. 4).

(3) Mount second aimer on other side of vehicle, in same manner.

(4) On each aimer, set pointer to numeral 2 on **DOWN** side of the **DOWN-UP** scale.

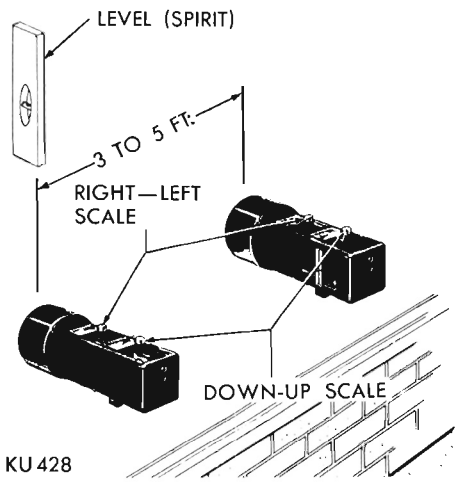

Fig. 3—Checking Aimer Calibration

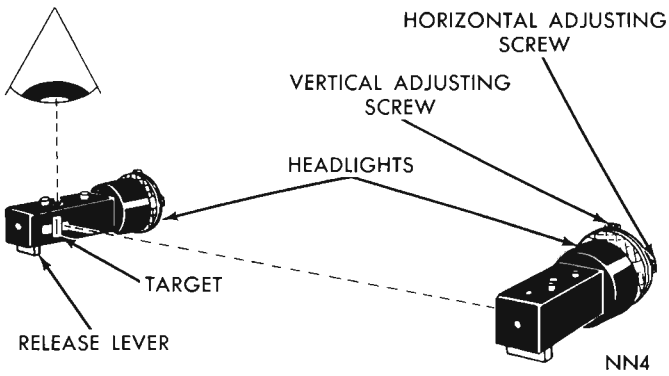

Fig. 4—Mounting and Adjusting Aimers

(5) On each aimer position the pointer, of the **RIGHT-LEFT** scale, at **2-RIGHT.**

MEASURING HEADLIGHT AIM

Horizontal Test

Turn the RIGHT-LEFT scale knob until the split image is in alignment. If the **RIGHT** or **LEFT** PORTION of scale exceeds the following values, the lights should be aimed.

Values given represent inches at 25 feet.

	Left	Right
No. 1 Unit	4	4
No. 2 Unit	0	4

Vertical Test

Turn **DOWN-UP** scale knob until the spirit level is centered. If **Down** or **Up** portion of the scale exceeds the following values, the lights should be aimed.

No. 1 Unit	1/2 to 3-1/2 down
No. 2 Unit	1/2 to 3-1/2 down

Horizontal Adjustment

(1) With pointer of **RIGHT-LEFT** scale still set **2-RIGHT,** sight through aimer viewing port. **Make sure that line of sight is perpendicular from eye to viewing port of aimer and that target image is centered in viewing port of aimer.**

(2) While sighting through viewing port of aimer, turn horizontal adjusting screw on headlight until split target image line merges into one unbroken line. To remove backlash, be sure to make a final adjustment by turning headlight horizontal adjusting screw in a clockwise direction, (Fig. 5).

(3) Make horizontal adjustment on other side of vehicle in same manner.

Vertical Adjustment

(1) Turn vertical adjusting screw on headlight in counterclockwise direction to bring bubble of spirit level on aimer to vehicle side of center. Use care to avoid disturbing installed position of aimers. Then turn screw clockwise until bubble is centered for cor-

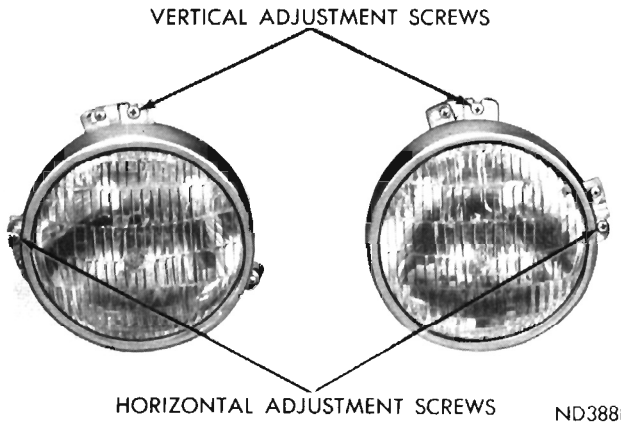

Fig. 5—Headlight Adjustment Points

rect aim and elimination of backlash.

(2) Make vertical adjustment on other side of vehicle in same manner.

(3) Inspect target alignment on each side and readjust the horizontal aim, if necessary.

Proceed to adjust number (1) bulbs on dual headlight systems by repeating outlined procedure. **Remove aimers by releasing spring lock at rear (bottom) of aimer and pushing release lever forward. Do not attempt to remove the aimers by pulling away from headlight lens—slide suction cup downward and away from lens.**

(4) Install headlight trim panels.

SEALED BEAM REPLACEMENT (ALL MODELS)

The lens, filament and reflector are sealed into one unit which can be removed as follows:

(1) Remove screws from headlight panel and remove panel.

(2) Remove screws from interior retaining ring, and remove ring. **Do not disturb headlight aimer screws.**

(3) Pull out sealed beam unit and unplug connector, pulling straight off.

(4) Install new sealed beam unit.

(5) Install unit retaining ring.

(6) Aim the headlight and install headlight panel.

VISUAL HEADLIGHT ADJUSTMENT

Low Beam

Place vehicle on a known level floor 25 feet from aiming screen or light colored wall.

Four lines are required on screen or wall (Fig. 6).

(a) A horizontal line at the level of centers of headlights, line number 3.

(b) A center vertical line which must be lined up with center of hood, line number 5.

(c) A vertical line on left of screen or wall in line with center line of left headlight line number 4.

(d) A vertical line on right of screen or wall in line with center line of right headlight, line number 6.

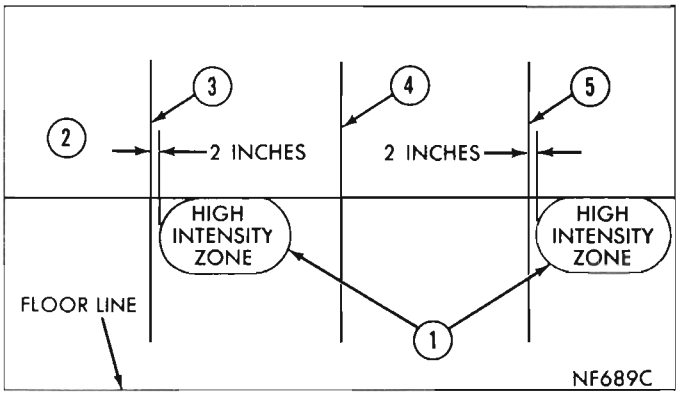

Fig. 6—Low Beam Adjustment Pattern

Remove headlight door. Adjust top adjusting screw for vertical adjustment, adjust side screw for horizontal adjustment. (See Fig. 5.)

Adjust low beam of headlights to match the patterns in Figure 6 and the corresponding numbers listed below:

(1) Lower beam pattern of both headlights

(2) Horizontal line at level of headlight centers.

(3) Vertical line in line with center of left headlight.

(4) Vertical line in line with center of hood.

(5) Vertical line in line with center of right headlight.

High Beam

Adjust high beam of headlights to match the patterns in Figure 7 and the corresponding numbers listed below:

(1) High beam pattern of both headlights.

(2) Horizontal line at level of headlight centers.

(3) Vertical line in line with center of left headlight.

(4) Vertical line in line with center of hood.

(5) Vertical line in line with center of right headlight.

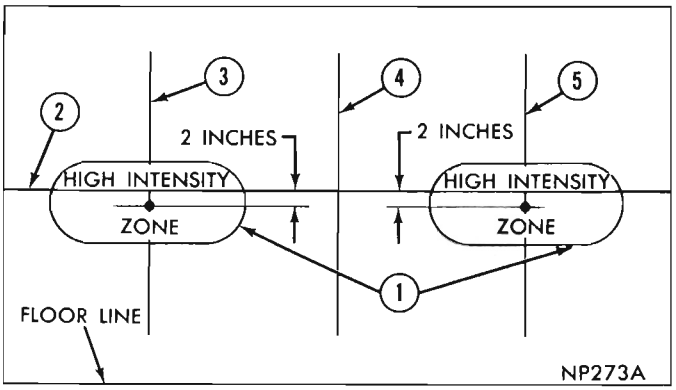

Fig. 7—High Beam Adjustment Pattern

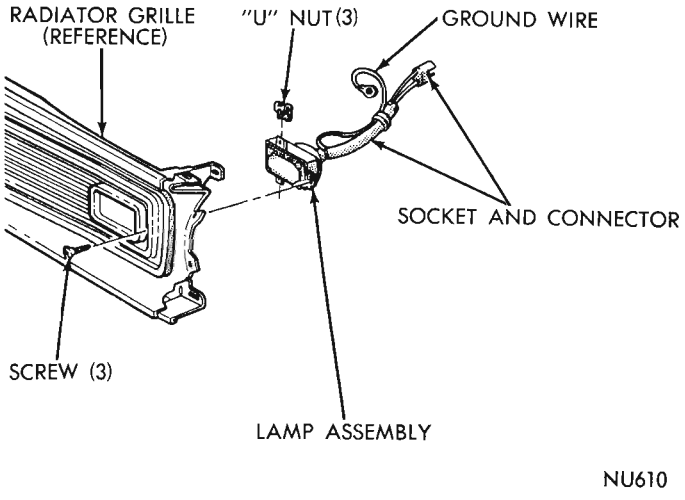

Fig. 8—Front Park and Turn Signal Lamp—Valiant

FRONT PARK AND TURN SIGNAL LAMP—Valiant—(Fig. 8)

Removal

(1) Disconnect ground wire at ground connection and lamp socket at harness connector.

(2) Remove three screws attaching lamp to radiator grille and remove lamp.

Installation

(1) Position lamp on grille, ensure that the three "J" nuts are in position on lamp assembly then install attaching nuts.

(2) Coonect ground wire to ground connection and socket connector to harness connector.

FRONT PARK AND TURN SIGNAL LAMP—Barracuda—(Fig. 9)

Removal

(1) Disconnect lamp socket connector from front end lighting harness.

(2) Remove two nuts from lamp studs and remove lamp.

Installation

(1) Position lamp in radiator grille and install attaching nuts.

(2) Connect lamp socket connector at harness.

FRONT PARK AND TURN SIGNAL LAMP—Belvedere, Satellite—Fury and VIP—(Fig. 10)

Removal

(1) Remove two screws attaching lamp to front bumper.

(2) Disconnect socket connector from harness connector and remove lamp. To replace bulb, remove four screws attaching lamp lens to lamp housing.

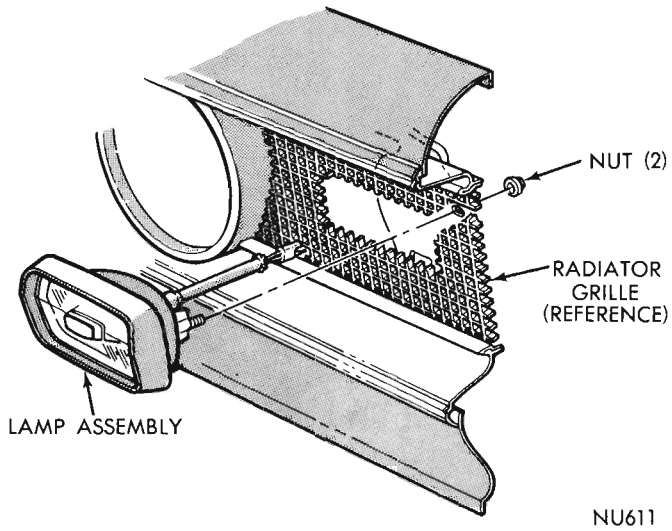

Fig. 9—Front Park and Turn Signal Lamp—Barracuda

Installation

(1) Position lamp on front bumper and install attaching screws.

(2) Connect lamp socket connector to the harness connector.

CORNERING LAMPS—Fury and VIP (Typical)—(Fig. 11)

Removal

(1) From under fender, remove nut and stud from lower end of brace and nut from lamp stud at upper end of brace and remove brace.

(2) Remove two nut assemblies attaching lamp to lamp bezel studs, disconnect socket connector from harness connector and remove lamp.

(3) To replace bezel, remove two self-tapping screws from lower ridge of fender. To replace lamp

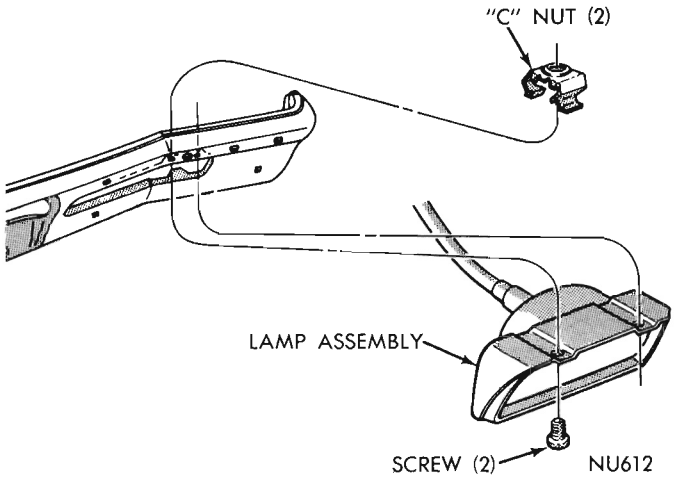

Fig. 10—Front Park and Turn Signal Lamp—Belvedere, Satellite, Fury and VIP

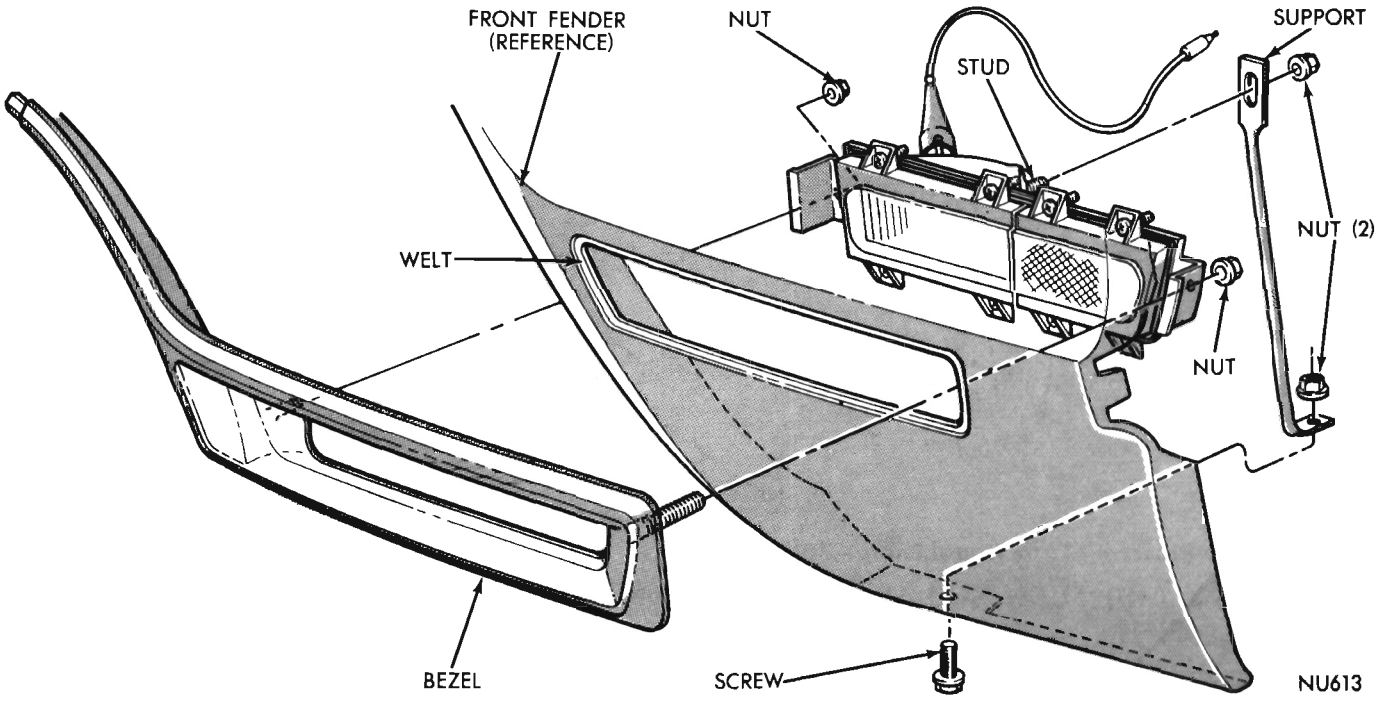

Fig. 11—Cornering Lamps—Fury and VIP

bulb, remove eight screws attaching lens to lamp housing.

Installation

(1) If bezel was removed, install bezel, position lamp on bezel studs and install the two attaching nuts. Tighten to 12 to 22 inch pounds.

(2) Install fender brace and attaching nuts. Tighten nuts to 12 to 22 inch pounds.

(3) Connect lamp connector to harness connector.

TAIL, STOP, TURN SIGNAL AND BACK-UP LAMP—Valiant—(Fig. 12)

Removal

(1) From inside of trunk, remove four caplugs and four attaching nuts.

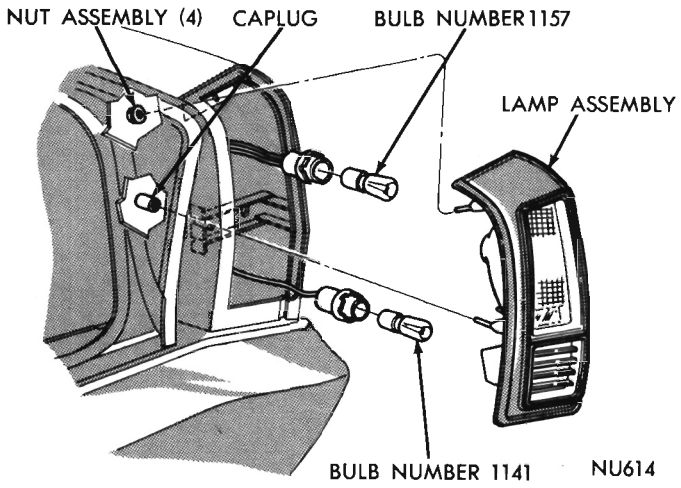

Fig. 12—Tail, Stop Turn Signal and Back-Up Lamp—Valiant

(2) Snap out lamp sockets from lamp housing and remove lamp assembly.

Installation

(1) Ensure sealing gasket is in good condition.

(2) Position lamp on quarter panel, snap in lamp sockets and install attaching nuts and caplugs.

TAIL, STOP AND TURN SIGNAL LAMP—Barracuda—(Fig. 13)

Removal

(1) From inside of trunk compartment, remove four caplugs and four nuts from lamp studs.

(2) Snap out lamp socket and remove lamp assembly.

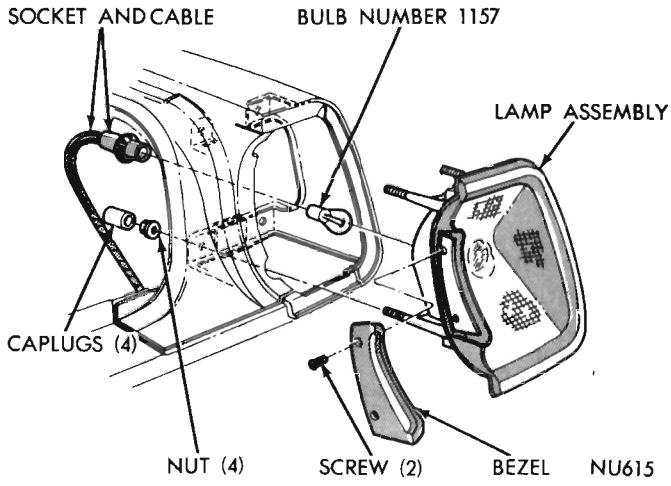

Fig. 13—Tail, Stop and Turn Signal Lamp—Barracuda

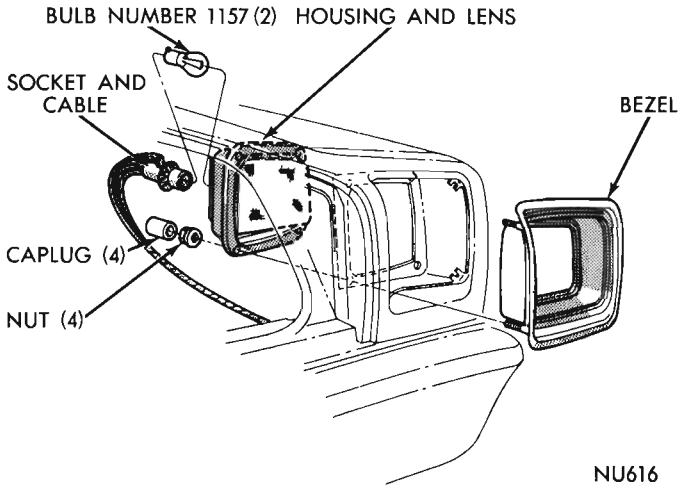

Fig. 14—Tail, Stop and Turn Signal Lamp—Except Station Wagons—Belvedere and Satellite

Installation

(1) With seal gasket in good condition and properly positioned on quarter panel opening, install lamp assembly.

(2) Install lamp attaching nuts and caplugs.

TAIL, STOP AND TURN SIGNAL LAMP—Belvedere and Satellite—Except Station Wagons (Fig. 14)

Removal

(1) Working through trunk compartment, remove four caplugs and four nuts attaching lamp bezel, lens and housing to quarter panel.

(2) Snap out lamp socket from lamp housing.

(3) From inside of trunk slide lamp housing and lens from bezel studs.

(4) Remove bezel from quarter panel.

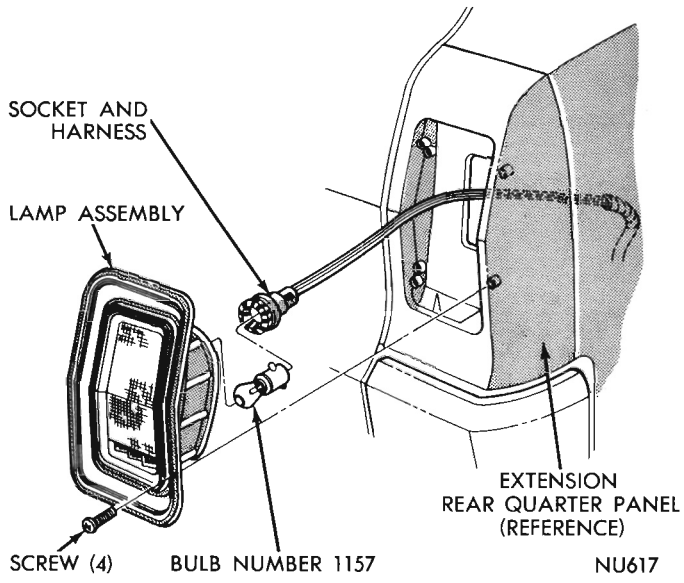

Fig. 15—Tail, Stop and Turn Signal Lamp—Station Wagons—Belvedere and Satellite

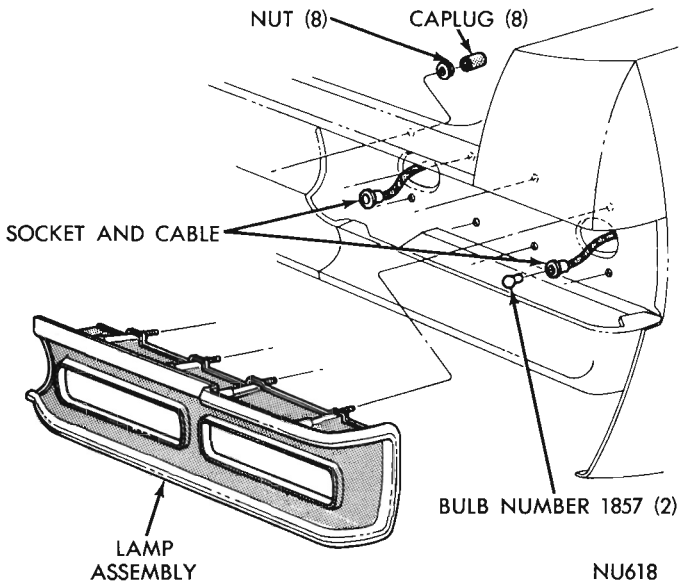

Fig. 16—Tail, Stop and Turn Signal Lamp—Except Station Wagons—Fury and VIP

Installation

(1) Determine that bezel gasket is in good condition then position bezel on quarter panel.

(2) Install housing and lens on bezel studs and install attaching nuts and caplugs.

TAIL, STOP AND TURN SIGNAL LAMP—STATION WAGONS—Belvedere and Satellite—(Fig. 15)

Removal

(1) Remove four screws attaching lamp assembly to quarter panel.

(2) Pull lamp out of panel well, snap out socket and bulb and remove lamp.

Installation

(1) Position lamp on quarter panel, snap in lamp socket, install attaching screws.

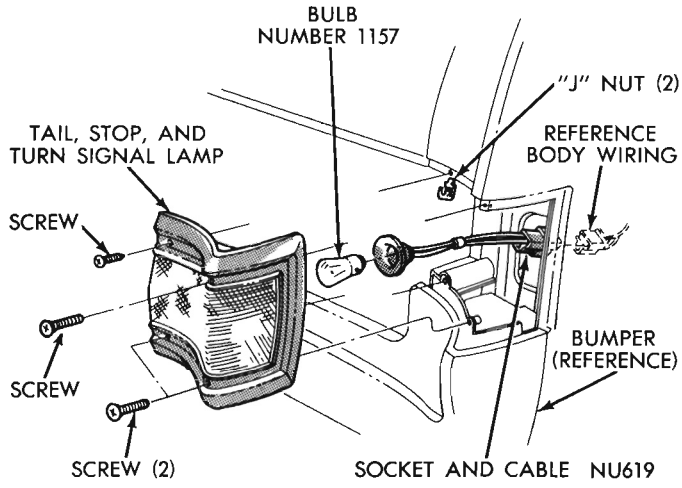

Fig. 17—Tail, Stop and Turn Signal Lamp—Station Wagons—Fury

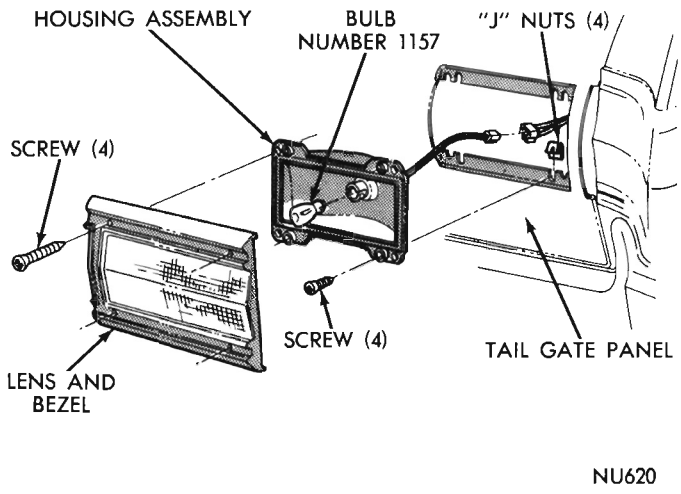

Fig. 18—Tail Gate, Tail, Stop and Turn Signal Lamp—Fury

TAIL, STOP AND TURN SIGNAL LAMP—Except Station Wagons—Fury and VIP—(Fig. 16)

Removal

(1) Working through trunk compartment, remove caplugs from stud ends.

(2) Remove eight attaching nuts from lamp studs.

(3) Pull lamp rearward, snap out lamp sockets and remove lamp.

Installation

(1) Position lamp and snap in lamp sockets.

(2) Install eight attaching nuts and caplugs.

TAIL, STOP AND TURN SIGNAL LAMP—Fury Models (Fig. 17)

Removal

(1) Remove four screws attaching lamp assembly to quarter panel.

(2) Pull lamp from panel and disconnect lamp socket from lamp by twisting socket out of lamp housing.

Installation

(1) Determine that the "J" nuts are positioned on quarter panel, twist lamp socket into lamp housing and install the four attaching screws.

TAIL GATE TAIL, STOP AND TURN SIGNAL LAMP—Station Wagons—Fury Models—(Fig. 18)

Removal

(1) Remove four screws attaching lamp lens to tail gate and remove lens.

(2) Remove four screws attaching lamp housing to tail gate panel, disconnect socket connector to harness connector and remove lamp housing.

Installation

(1) Connect socket connector to harness connector, position lamp housing to tail gate panel and install attaching screws.

(2) Install lamp lens and attaching screws.

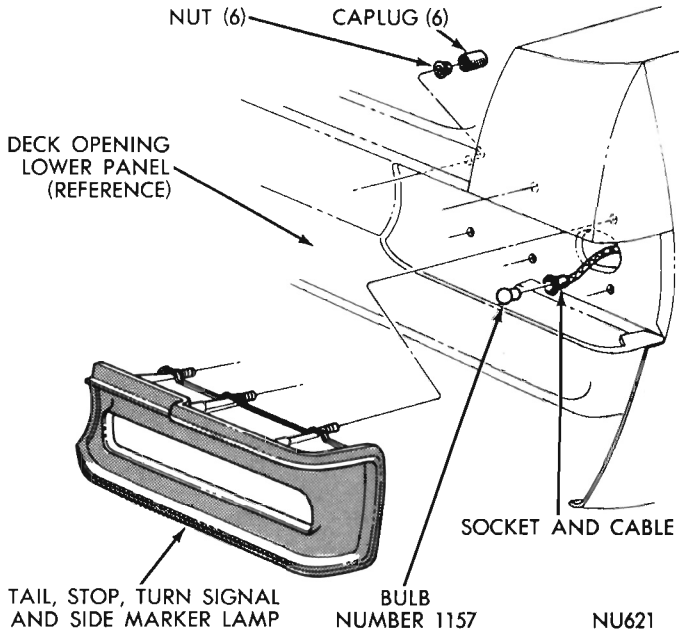

Fig. 19—Tail, Stop and Turn Signal Lamp (Except Station Wagons)—Fury I and II

TAIL, STOP AND TURN SIGNAL LAMP—Except Station Wagons—Fury I and Fury II—(Fig. 19)

Removal

(1) Working through trunk compartment, remove six caplugs and attaching nuts.

(2) Snap out socket and bulb from lamp housing and remove lamp assembly.

Installation

(1) Position lamp assembly on quarter panel and

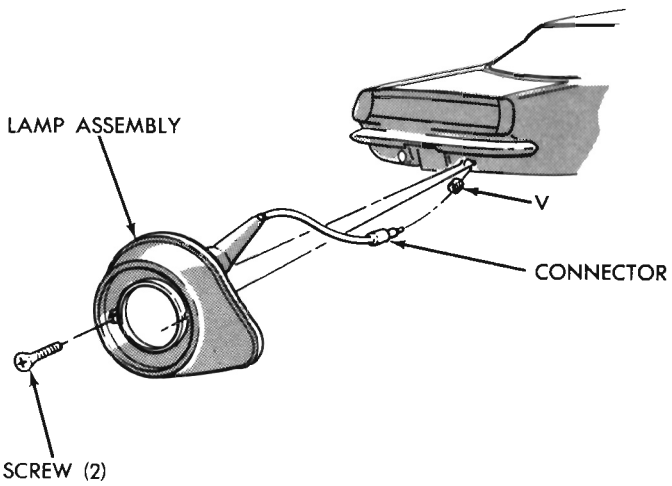

Fig. 20—Back-up Lamp—Barracuda

install attaching nuts and caplugs.

(2) Snap in lamp bulb and socket.

BACK-UP LAMP—Barracuda—(Fig. 20)

Removal

(1) Remove two screws attaching lamp to bumper.

(2) Pull lamp out of bumper, disconnect lamp connector from harness connector. To replace lamp bulb, remove two screws attaching lamp bezel to lamp housing.

Installation

(1) Connect lamp connector to harness connector, position lamp on bumper and install the two attaching screws.

BACK-UP LAMP—Fury and VIP—(Fig. 21)

Removal

(1) Disconnect lamp wiring at harness connector.

(2) Remove two screws attaching lamp to bumper. To replace bulb, remove two screws attaching lens to housing and turn bulb out in a twisting motion.

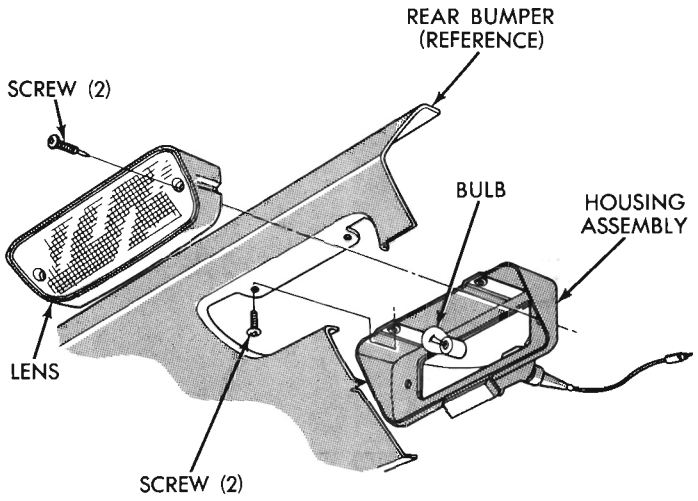

NU623

Fig. 21—Back-up Lamps—Fury and VIP

Installation

(1) Position lamp on bumper and install attaching screws.

(2) Connect lamp wiring at harness connector.

TURN SIGNALS—EMERGENCY FLASHER

INDEX

	Page		Page
Emergency Flasher	67	Service Diagnosis	65
General Information	65	Switch	66

GENERAL INFORMATION

The turn signals are activated with a lever mounted on the left side of the steering column just below the steering wheel. When the driver wishes to signal his intentions to change direction of travel, moving the lever up causes the right turn signals to flash. Moving the lever down causes the left turn signals to flash.

After completion of a turn the system is deactivated automatically. As the steering wheel returns to the straight ahead position, a lobe mounted to the underside of the steering wheel contacts one of two canceling cams in the turn signal switch mounted in the steering column upper housing. Contact of the lobe with the canceling cam returns the switch to the off position.

When the system is activated, one of two indicator lights mounted in the instrument cluster or on the front fender flashes in unison with the turn signal lights (Fig. 1) indicating to the driver that the system is operating.

The turn signal flasher is a plug in type mounted to the right of the steering column, under the instrument panel in a bracket mounted near the ash receiver housing for Valiant, Barracuda, Fury and VIP models; on the lower instrument panel to the left of the steering column for Belvedere and Satellite models.

SERVICE DIAGNOSIS

Condition	Possible Cause	Correction
EXTERNAL LIGHTS OPERATE NORMALLY, NO INDICATIONS ON INSTRUMENT CLUSTER	(a) Faulty pilot bulb in instrument cluster.	(a) Replace bulb.
SYSTEM DOES NOT FLASH	(a) Faulty flasher unit. (b) Faulty external bulb. (c) Faulty contact in switch.	(a) Replace flasher. (b) Replace faulty bulb. (c) Replace switch.

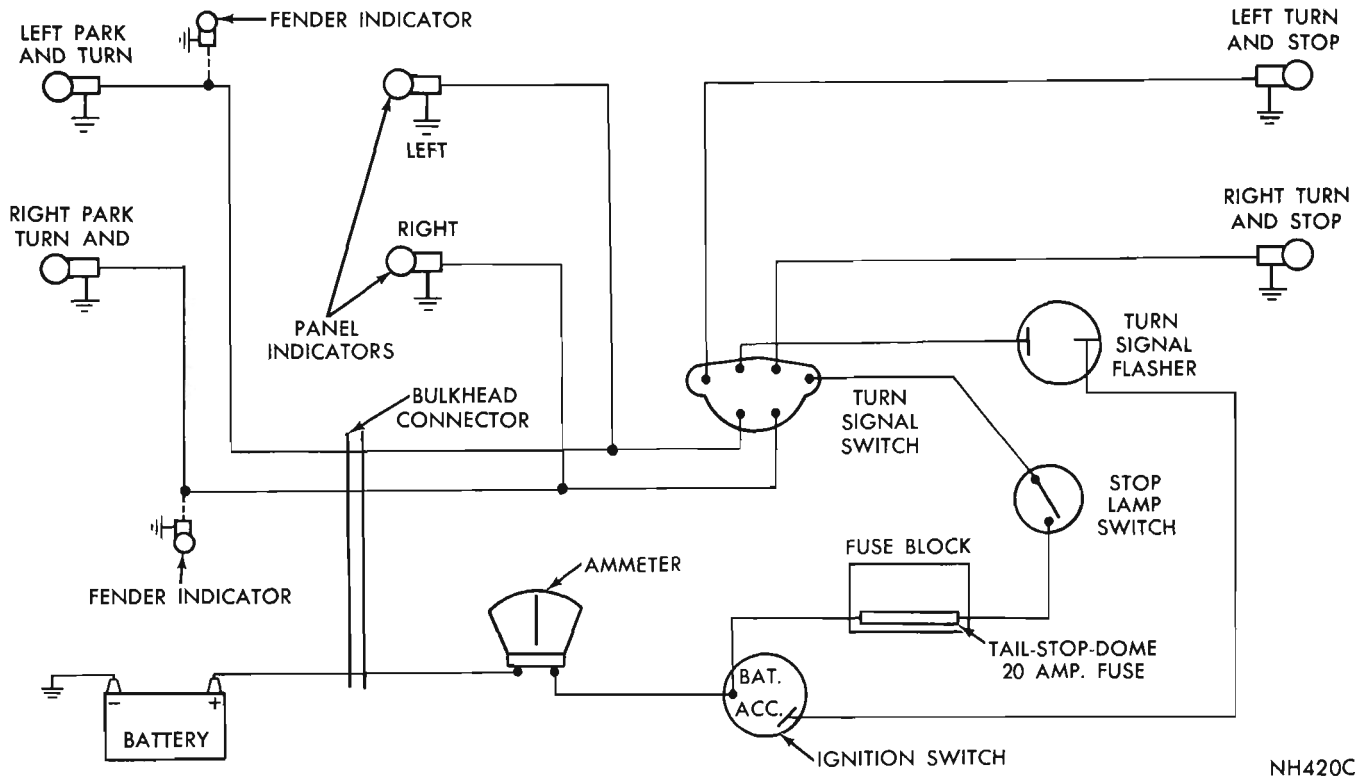

Fig. 1—Turn Signal Wiring

Condition	Possible Cause	Correction
SYSTEM DOES NOT CANCEL AFTER COMPLETION OF TURN	(a) Broken or loose cancelling finger. (b) Improperly aligned cancelling finger. (c) Broken or faulty switch.	(a) Replace cancelling finger. (b) Align cancelling finger properly. (c) Replace switch.
ENTIRE SYSTEM DOES NOT OPERATE	(a) Open circuit in feed wire to switch. (b) Faulty fuse. (c) Faulty flasher unit.	(a) Check wiring circuits. Refer to "Wiring Diagrams." (b) Replace fuse. (c) Replace flasher.
PILOT LIGHT ILLUMINATES BRIGHTLY, EXTERNAL LIGHT GLOWS DIMLY WITH NO FLASH	(a) Loose or corroded external lamp ground connection.	(a) Clean and tighten ground connection.

SERVICE PROCEDURES

TURN SIGNAL SWITCH

Removal

(1) Disconnect the battery ground cable.

(2) Remove horn ring ornament assembly by turning counterclockwise.

(3) Disconnect horn wire at horn switch.

(4) Remove three screws attaching horn ring and switch to steering wheel. Remove horn ring and switch.

(5) Loosen steering wheel nut several turns and install Steering Wheel Puller Tool C-3428. Loosen steering wheel first. Then remove steering wheel nut and steering wheel.

(6) Disconnect switch wiring multiple connector at steering column jacket. Remove each terminal from connector, tying them together with a piece of string or fine wire.

(7) Remove screws attaching turn signal switch to steering column and remove switch, and switch wires from column. Leave string or wire in column as an aid to installation.

Installation

(1) Attach string or wire (that was left in steering column jacket tube during removal) to turn signal switch wiring, and carefully pull string or wire down through column jacket tube until turn signal switch is positioned in steering column jacket tube. Install attaching screws and connect all wire connections.

(2) Install turn signal switch lever. Tighten to 30 inch-pounds.

(3) Install steering wheel and steering wheel nut. Tighten to 24 foot-pounds. Test operation of cancelling lever.

(4) Install horn switch, horn ring retainer, insulators and attaching screws. Connect horn wire at horn switch.

(5) Position horn ring ornament assembly on horn ring and lock by turning clockwise.

(6) Connect battery ground cable.

EMERGENCY FLASHER

The emergency flasher system is energized by a switch on the instrument panel when the driver wishes to draw attention to the vehicle. When the switch is activated all turn signal lights and the turn signal indicators flash simultaneously. **Before the switch is activated, the turn signal switch should be in the neutral position to prevent a characteristic feed back through the accessory circuit causing intermittent operation of the accessories.**

When the flasher is operating, application of the brake pedal will override the system and interrupt the flasher. All lights will remain on bright until the brake pedal is released.

For removal and installation of the switch see "Instrument Panels".

The system consists of a separate instrument panel switch and flasher unit. The flasher is mounted on the instrument panel support for Valiant and Barracuda models, on the lower instrument panel to the right of the steering column for Belvedere and Satellite models and on the right side of the brake bracket for Fury and VIP models.

The flasher is a plug-in **heavy duty** type and is not to be confused with the turn signal flasher. The flasher has the number 175 or 552 on the cover.

HORNS

GENERAL INFORMATION

The horn circuit consists of a horn switch located in the steering wheel hub and a horn relay mounted in the engine compartment for Belvedere and Satellite models. On Valiant and Barracuda models the relay is mounted in the passenger compartment under the instrument panel at left kick pad. For Fury and VIP models the horn relay is mounted to the fuse block in the passenger compartment under the instrument panel adjacent to the left hand kick pad. Battery current from the "B" terminal of the starter relay flows to the "B" terminal of the horn relay. When the horn ring or button is depressed, the horn ring completes a ground circuit to the horn relay closing a set of points in the relay and allowing battery current to flow from the relay to the horns which are grounded to the sheet metal of the vehicle.

SERVICE DIAGNOSIS

Condition	Possible Cause	Correction
HORNS WILL NOT SOUND	(a) Horn switch contact plate dirty.	(a) Remove steering wheel and clean.
	(b) Improper adjustment.	(b) See "Adjusting."
	(c) Broken or faulty wiring.	(c) See "Testing."
	(d) Faulty horn.	(d) See "Testing." Replace horn if necessary.
	(e) Faulty relay.	(e) See "Testing." Replace relay if necessary.
HORNS SOUND CONTINUOUSLY (Immediately disconnect wires from horns and wire from the "B" terminal of horn relay).	(a) Shorted wiring.	(a) See "Testing."
	(b) Horn switch sticking.	(b) See "Testing"; Replace horn switch if necessary.
	(c) Relay sticking.	(c) See "Testing"; Replace relay if necessary.

SERVICE PROCEDURES

Testing

A. Horns will not sound

Should the horns fail to sound, disconnect wire connector at horn and connect one lead of a test light to the connector terminal and the other lead of test light to a good body ground. Depress the horn ring or button. Should the test light illuminate, the horns are faulty. Replace or adjust horns.

If the test light fails to light, reconnect the connector to the horn terminal and connect one lead of test light to the horn relay "B" terminal and the other test light lead to a good body ground. If the

light fails to illuminate, inspect for corroded battery terminals, dead battery or an open circuit in the wire from the starter relay to the "B" terminal of the horn relay.

Should the test light illuminate, touch a jumper wire from relay "S" terminal to good body ground. Sounding of the horns will indicate a poor ground circuit in the horn switch, an open wire from the "S" terminal of the horn relay or a poorly grounded steering column.

To determine if the horn relay is defective, connect a jumper wire from "B" to "H" terminals. If horns operate, the horn relay is faulty and should be replaced.

B. Horns sound continuously

Should the horns sound continuously, disconnect wires from horns and the positive wire from "B" terminal of horn relay. Remove wire from "S" terminal of horn relay and place one lead of a test light (with its own battery) to the wire connector and the other lead to a good ground. If the light illuminates; either the wire is shorted to ground or the horn button is sticking. Remove steering wheel and disconnect wire from horn switch. Repeat above test and if light still illuminates; wire is shorted to ground. Repair or replace wire.

If light does not illuminate; horn switch is sticking. Repair or replace horn switch.

If the light does not illuminate on the first test; connect one lead of a test light (without integral battery) to the horn wire connector (green wire) and the other lead to a good body ground. If test light illuminates, there is a short in the horn wiring. Repair or replace wire. If the test light does not illuminate; connect the positive lead back on the "B" terminal of the horn relay and repeat above test. If the light now illuminates, then the relay contacts are sticking. Replace horn relay.

Adjusting

(1) Disconnect connections at each horn to determine which horn is not operating.

(2) Remove horn and bracket assembly.

(3) With a suitable tool (Figs. 1 and 2), turn tone adjuster counterclockwise until there is no vibration (sound).

(4) Turn tone adjuster clockwise, approximately 1/4 turn at a time until tone has a clear mellow sound. Do not turn tone adjuster while horn is sounding. **Adjustment will only clear up sound and cannot change horn tone frequency.**

(5) Connect a test ammeter between positive post of a 12 volt battery and horn terminal post. Connect a jumper lead from negative battery post to horn base. Clean paint from horn bracket where connection is made. Turn adjusting screw to obtain a reading of six amperes minimum to eight amperes maximum for Sparton horns, four amperes minimum to six amperes maximum for Prestolite horns and 3.5 amperes minimum to 4.5 amperes maximum for road runner (Sparton) horns at 12.4 volts.

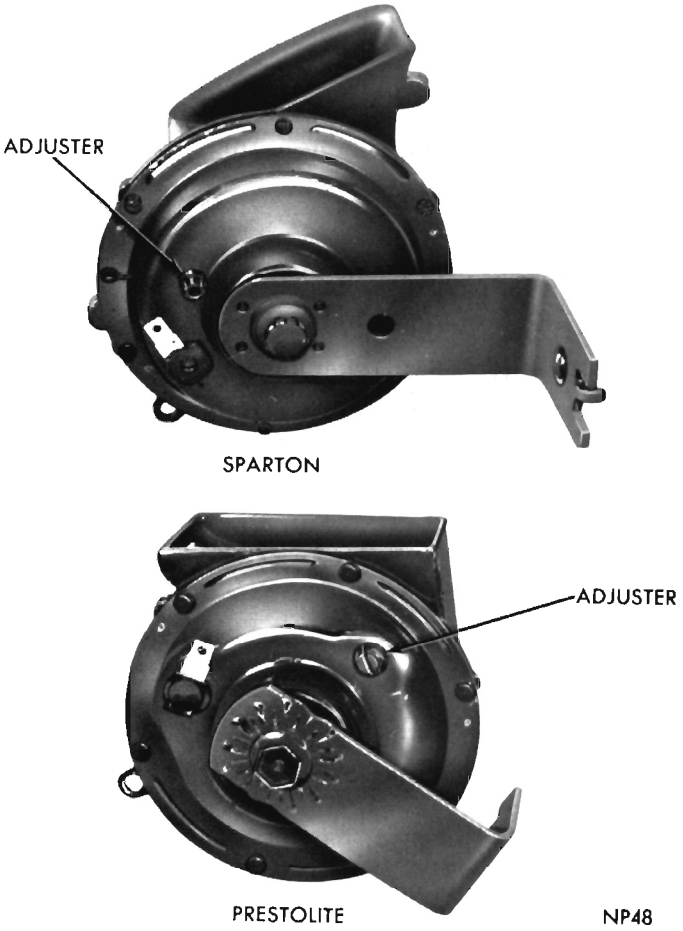

Fig. 1—Horn Adjustments

Amperage must not exceed eight amperes maximum for Sparton horns, six amperes maximum for Prestolite horns and 4.5 maximum for Road Runner (Sparton) horns.

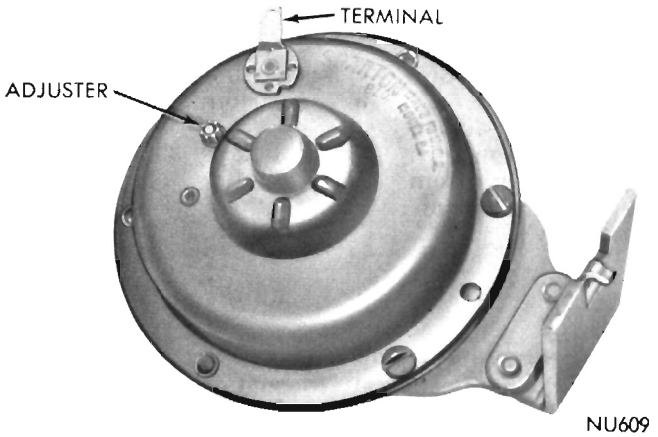

Fig. 2—Horn Adjustments—Road Runner

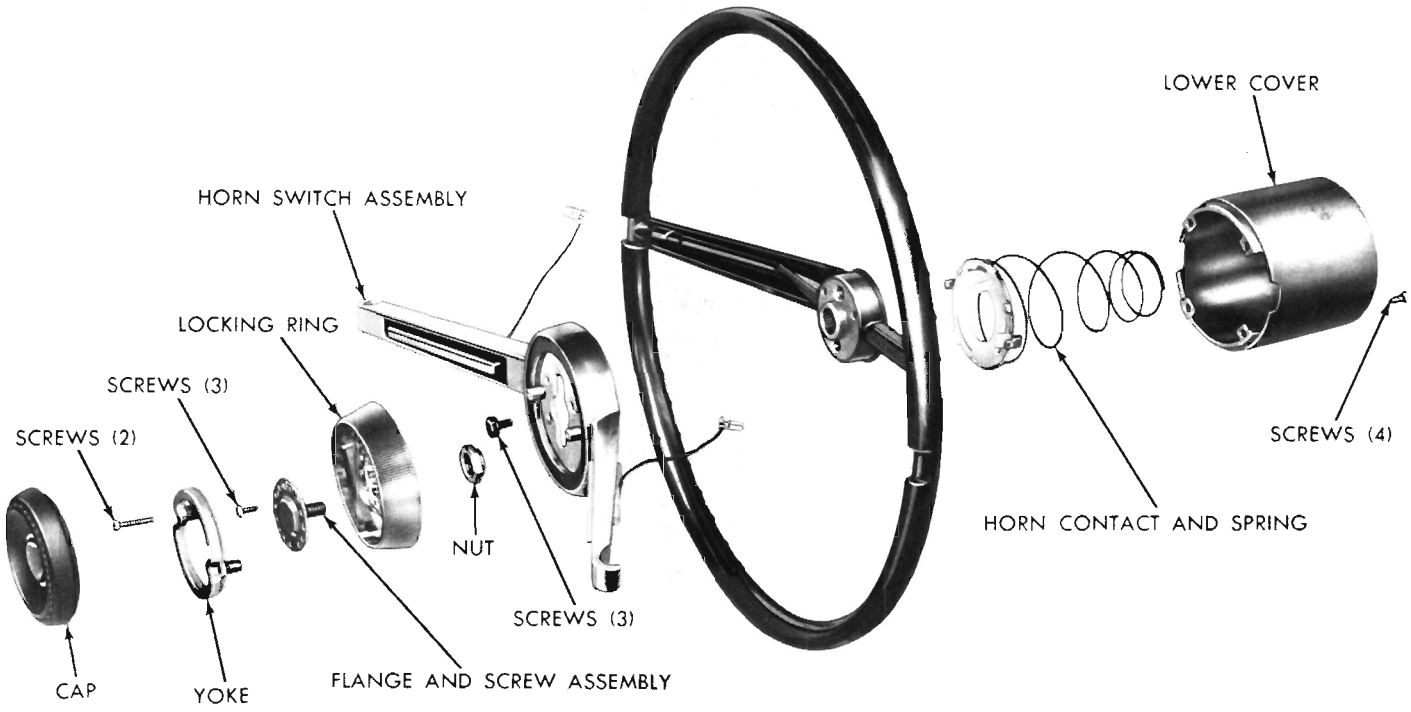

Fig. 3—Horn Switch—Adjustable Steering Column (Typical)

HORN SWITCH

Removal—Non Adjustable Steering Column

(1) Disconnect battery ground cable.

(2) Remove horn ring ornament by turning counterclockwise.

(3) Disconnect horn wire at switch terminal in steering wheel hub.

(4) Remove three cross-recessed screws retaining horn ring to steering wheel hub and lift horn ring off.

(5) With horn ring upside down, remove three screws retaining horn switch to horn ring and remove switch.

Installation

(1) Locate horn switch on bottom of horn ring and install three retaining screws.

(2) Position horn ring and switch assembly on steering wheel hub with horn wire routed through inside of horn switch. Install assembly with three retaining screws.

(3) Connect horn wire terminal to horn switch.

(4) Install horn ring ornament assembly by turning clockwise.

(5) Connect battery ground cable and test operation of horns.

Removal—Adjustable Steering Column (Fig. 3)

(1) Disconnect battery ground cable.

(2) Carefully pry cap and ornament assembly from steering wheel.

(3) Remove two screws and yoke from steering wheel upper cover.

(4) Remove three screws attaching flange and screw assembly to locking ring. Remove flange and screw assembly, and locking ring.

(5) Scribe an alignment mark on steering wheel hub in line with mark on end of steering shaft to aid in reassembly.

(6) Remove steering wheel retaining nut, then remove steering wheel with Tool C-3428A.

(7) Remove four screws and remove hub lower cover. Disconnect the two switch wires and remove horn contact and spring assembly.

(8) Remove three screws and remove horn switch assembly from steering wheel.

Installation

(1) Position horn switch assembly on steering wheel. Make sure switch wires are not pinched, then install and tighten the three retaining screws.

(2) Connect the two switch wires to horn contact. Insert locating pin of contact in hole in steering wheel hub and snap ears of contact over flange on steering wheel hub.

(3) Install hub lower cover and secure with the four screws (Fig. 3).

(4) Install steering wheel with scribed mark on hub aligned with mark on end of steering shaft. Install and tighten retaining nut to 40 foot-pounds.

(5) With steering wheel spokes in a horizontal plane, place locking ring on wheel with ribs of ring

in approximate 2 and 8 o'clock position.

(6) Hold locking ring in this position and install flange and screw assembly. Tighten flange and screw firmly into upper shaft (tight enough to prevent telescoping action). Move locking ring slightly if necessary to align screw holes, install and tighten the three screws securely (Fig. 3).

(7) Install yoke and secure with the two screws.

(8) Check operation of telescoping mechanism as follows:

Rotate locking ring counterclockwise against its stop. The wheel should be entirely free to telescope. Rotate locking ring clockwise making certain it secures wheel in any telescoped position.

(9) Install cap and ornament on steering wheel, connect battery ground cable and test operation of horn switch.

INSTRUMENT PANELS

INDEX

	Page
Brake System Warning Light	72
Circuit Breakers	79
Fuse Block	78-79
Gear Selector Indicator	78
General Information	70
Heater or Air Conditioning Controls	80
Instruments	77
Instrument Clusters	72-73-74-75-76
Light Bulb Replacement	72
Printed Circuit Board Replacement	78
Service Diagnosis	70
Specifications	109
Speedometer Replacement	77
Switch Replacement	79
Test in Vehicle	71
Tests out of Vehicle	78

GENERAL INFORMATION

The fuel and temperature gauges operate on the constant voltage principle through a voltage limiter mounted externally on the printed circuit board.

Fuel Level Indicating System

A hinged float arm in the fuel tank raises or lowers dependent on the fuel level. The float arm contacts a variable resistor in the gauge sending unit that provides a change of resistance in the fuel gauge circuit with any up or down movement of the float. This resistance registers on the instrument panel gauge, metered to the capacity of the tank.

When the fuel level in the tank is low, the resistance of the circuit is increased restricting current flow and consequently positions the instrument panel gauge pointer to low.

Resistance in the circuit is at a minimum when the tank is full and the float arm is raised. With resistance at a minimum, current flow is high registering full on the instrument panel gauge.

Temperature Indicating System

The operation of the temperature indicating system is identical in operation with the fuel system with the exception of the method of varying the resistance of the sending unit. In this system the sending unit resistance varies in direct relation to the temperature of the coolant.

When the engine is cold the resistance of the disc in the temperature sending unit is high and a low temperature will be indicated on the gauge.

Oil Pressure Warning Light

The oil pressure warning switch, mounted on the engine, is controlled by the engine oil pressure.

When the engine oil pressure is high (normal operating condition of the engine) the switch is held in the **"OFF"** or **"OPEN"** position allowing no current to flow to the oil pressure warning lamp on the instrument panel.

When the engine oil pressure is low the switch is in the **"ON"** or **"CLOSED"** position allowing current to flow to the oil pressure warning lamp on the instrument panel causing the warning lamp to be illuminated.

SERVICE DIAGNOSIS

Condition	Possible Cause	Correction
ALL GAUGES READ HIGH("against the peg") AFTER IGNITION SWITCH IS TURNED "ON."	(a) Faulty voltage limiter.	(a) Test the voltage limiter. Replace as necessary.
	(b) Cluster not properly grounded to panel.	(b) Tighten cluster mounting screws.
GAUGE POINTERS DO NOT MOVE WHEN IGNITION SWITCH IS TURNED "ON."	(a) Faulty voltage limiter or an open circuit on battery side (input of limiter).	(a) Test voltage limiter. Test wiring, repair or replace as necessary.

Condition	Possible Cause	Correction
TEMPERTURE GAUGE INDICATES NORMAL OPERATION, BUT THE FUEL GAUGE INDICATES A HIGHER OR LOWER FUEL LEVEL THAN ACTUALLY EXISTS.	(a) Fuel tank sending unit or instrument panel fuel gauge is faulty. (b) Fuel tank is improperly grounded.	(a) Test sending unit and gauge. (b) Test fuel tank for a good ground. NOTE: Testing the system with the tank sending unit positioned for both "empty" and "full" is usually sufficient to determine the calibration in the range between these positions.
FUEL GAUGE INDICATES CORRECTLY BUT TEMPERATURE GAUGE INDICATES HIGHER OR LOWER TEMPERATURE THAN ACTUAL ENGINE TEMPERATURE.	(a) Faulty instrument panel temperature gauge, wiring or faulty temperature sending unit in engine.	(a) Test wiring, repair or replace as necessary. Test gauge and sending unit.
ERRATIC TEMPERATURE GAUGE OPERATION.	(a) Loose or dirty electrical connections.	(a) Clean and tighten all electrical connections and test the gauge operation.
ERRATIC OPERATION OF FUEL GAUGE.	(a) Loose or dirty electrical connections or faulty fuel tank sending unit.	(a) Test fuel gauge sending unit, and proceed as follows: (1) Clean and tighten all electrical connections. (2) Inspect the fuel tank ground strap and make sure tank is grounded to the frame.

SERVICE PROCEDURES

TESTS IN VEHICLE

Voltage Limiter

The voltage limiter can be tested in the vehicle or with the instrument cluster removed. To quickly test the voltage limiter in the vehicle, connect one lead of a voltmeter or test light to the temperature sending unit and the other lead to a good ground. Leave the sending unit lead wire attached to the sending unit.

Turn the ignition switch to the **"ON"** position. A fluctuating voltmeter or a flashing light indicates the voltage limiter is operating.

Fuel Gauge

(1) Disconnect terminal at fuel tank sending unit. Connect one lead of Tester C-3826 to disconnected wire and the other to a good ground. Turn ignition key on.

(2) Turn knob on dial of tester to "H" and observe gauge on panel. It should read "Full," plus 3/32″ or minus 1/32″.

With dial knob on "M," panel gauge should read 1/2.

With dial knob on "L," panel gauge should read "Empty," plus 1/32″ or minus 3/32″.

(3) If panel gauge does not perform as described, continuity of circuit from tank sending unit to panel unit should be tested with special attention to printed circuit board before replacing panel gauge.

(4) Should panel unit perform properly, fuel tank sending unit ground strap should be inspected for proper installation on fuel line. If ground continuity is satisfactory, remove tank unit for testing. See "Fuel System." Group 14.

Temperature Gauge

Disconnect the terminal from the temperature sending unit on the engine. Connect one test lead of tester C-3826 to the terminal and the other test lead to a good ground. Place the pointer of the gauge tester on the **"L"** position and turn the ignition switch to "on." The temperature gauge should show "C" plus or minus 1/8 inch. **Thermal gauges are slow in operation. Allow time for gauge to heat up.**

Place the pointer of the tester on the **"M"** position and the temperature gauge should advance to the driving range or 1/2 position of the dial. Place the pointer of the tester in the **"H"** position and the gauge should advance to the "H" position of the dial. Should the gauge respond to the above tests but not operate when the terminal is attached to the sending unit, indications are of a defective sending unit and it should be replaced.

Should the gauge fail to respond to the above tests, indications are of possible loose connections, broken wire, open printed circuit, or faulty gauge. The instrument cluster should be removed for further inspection. See "Instrument Cluster Removal."

Oil Pressure Warning Light

To test the oil pressure warning lamp, remove the terminal from the oil pressure sending unit. Connect one lead of the gauge tester to the terminal and the other test lead to a good ground.

With the ignition switch in the "on" position and the gauge tester in the **"L"** position, the warning lamp should not light. With the gauge tester in the **"M"** position, the warning lamp should show a dull glow. With the gauge tester in the **"H"** position, the lamp should show full brilliance.

Should the oil pressure warning lamp fail to respond to the above tests, indications are of possible loose connections, broken wire, or a burned out bulb.

BRAKE SYSTEM WARNING LIGHT

The brake warning light flashes only when the parking brake is applied with the ignition key turned "ON". The same light will also illuminate should one of the two service brake systems fail when the brake pedal is applied. To test the system turn the ignition key "ON", and apply the parking brake. If the light fails to light, inspect for a burned out bulb, disconnected socket, a broken or disconnected wire at the switch.

To test the service brake warning system, raise the car on a hoist and open a wheel cylinder bleeder while a helper depresses the brake pedal and observes the warning light. If the light fails to light, inspect for a burned out bulb, disconnected socket, a broken or disconnected wire at the switch. If the bulb is not burned out and the wire continuity is proven, replace the brake warning switch in the brake line "Tee" fitting mounted on the frame rail in the engine compartment below the master cylinder.

LIGHT BULB REPLACEMENT

The bulbs in the instrument cluster are retained in sockets plugged into the printed circuit board on the back of the instrument cluster.

For Valiant, Barracuda, Belvedere and Satellite models all cluster bulbs are accessible from behind the instrument panel.

To remove the socket, turn 1/4 turn counterclockwise and pull out from printed circuit board.

LAMP BULB REPLACEMENT—Fury and VIP

The following lamp bulbs are accessible from under the instrument panel. On air conditioner equipped models remove left air conditioner distribution duct to provide access.

Ignition
Oil pressure
Right turn signal
Left turn signal
Brake warning
High Beam Indicator lamp can be replaced after instrument cluster removal.

For proper replacement bulb numbers, see "Bulb Chart - Specifications".

INSTRUMENT CLUSTER

Removal—Valiant Models (Fig. 1)

(1) Disconnect battery ground cable.

(2) From under instrument panel, disconnect speedometer cable and printed circuit board multiple connector.

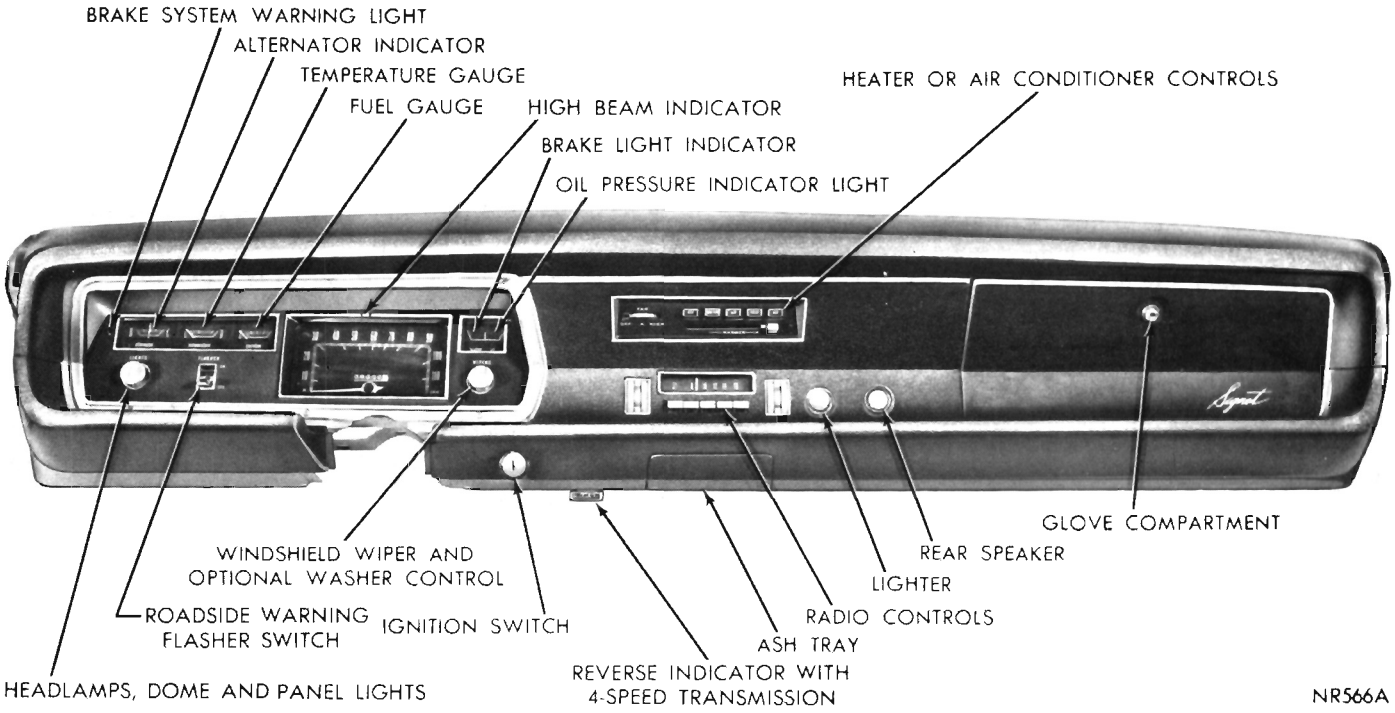

Fig. 1—Instrument Panel—Valiant Models

(3) Remove column cover and loosen steering column floor plate attaching screws, remove steering column upper clamp and allow steering column to rest in lowered position.

(4) Tape top of steering column to prevent damaging painted surface.

(5) Remove six mounting screws from cluster (three in underside of cluster bezel and three in lower edge).

(6) Before rolling cluster out of instrument panel, reach up behind and above cluster and bend three wire harness clips out of the way. Roll upper edge of cluster out far enough to disconnect ammeter wires, emergency flasher, windshield wiper and headlight switch connectors.

(7) Remove cluster to padded bench for servicing.

Installation

(1) Rest cluster in opening and connect ammeter wires, windshield wiper, headlight, emergency flasher connectors. Roll cluster into panel, lower edge first and secure with six metal screws.

(2) Reaching up behind instrument panel, connect printed circuit board multiple connector and speedometer cable.

(3) Install steering column upper clamp and mounting bolts finger tight. Install floor plate mounting bolts and tighten column upper clamp bolts. Install column cover.

(4) Remove tape from top of steering column, connect battery ground cable and test operation of all gauges.

INSTRUMENT CLUSTER—Barracuda (Fig. 2)

Removal

(1) Disconnect battery ground cable.

(2) Tape top of steering column to prevent damaging painted surface. Reaching up under panel, disconnect multiple connector from left printed circuit board.

(3) Remove four cluster retaining screws from underside of crash pad and four retaining screws from lower front face of cluster. Remove clock reset cable.

(4) Disconnect speedometer cable at speedometer.

(5) Pull cluster out far enough to reach around behind and disconnect right printed circuit board multiple connector, ammeter wires, vacuum gauge hose or tachometer wire and emergency flasher switch connector.

(6) Loosen air conditioning or heater knob(s) and remove from slide control. Remove air conditioner or heater control mounting screws and move control out of way.

(7) Depress headlight switch knob release button on bottom side of switch and pull knob and shaft out of switch. Using Tool C-3824, remove switch bezel and

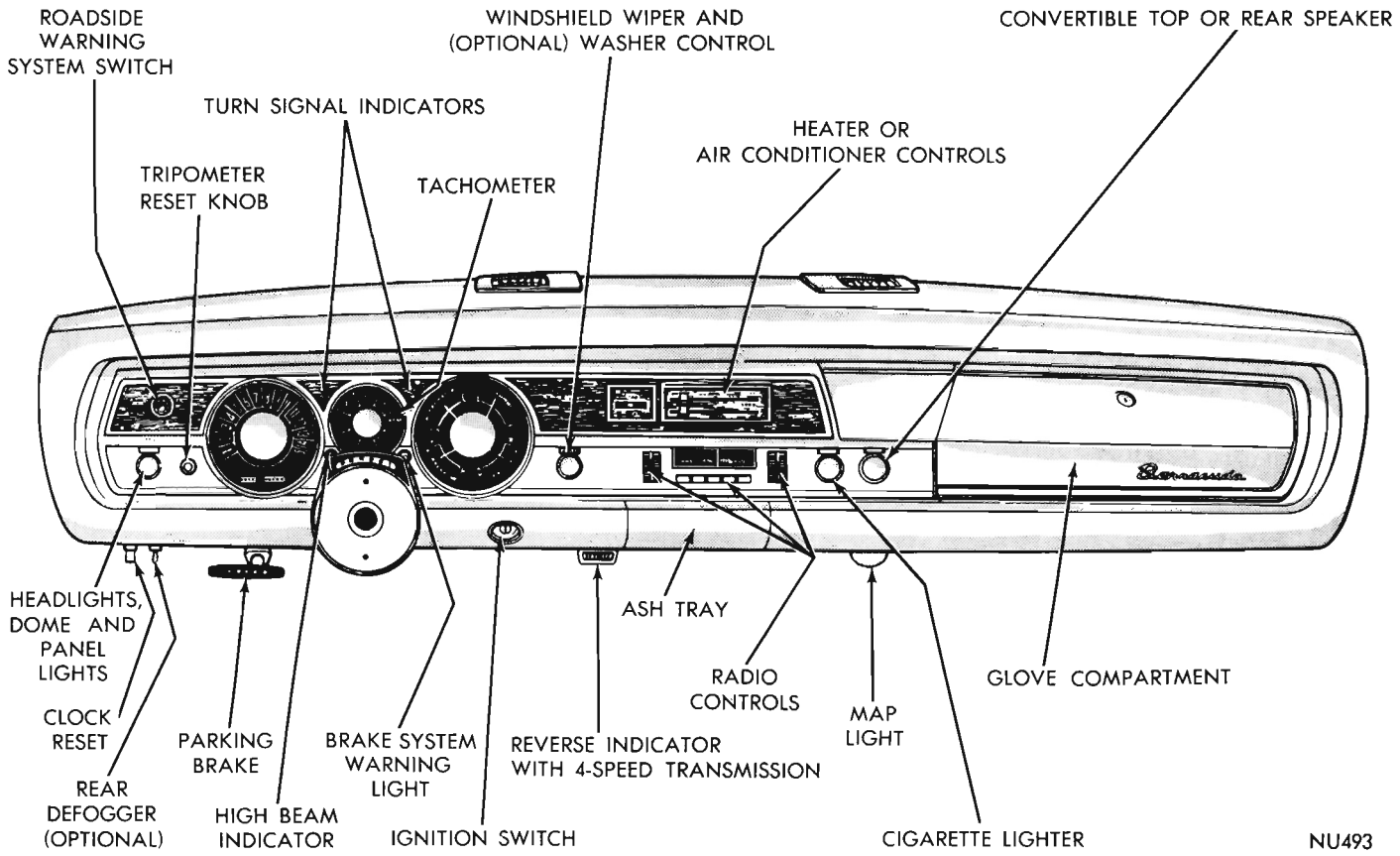

Fig. 2—Instrument Cluster—Barracuda Models

allow switch to remain connected to wire harness.

(8) Pull windshield wiper knob from shaft. Remove wiper switch bezel nut with Tool C-3824 and allow switch to remain connected to wire harness.

(9) Roll cluster out from panel opening, face down and to the right.

Installation

(1) Work cluster in to place from right of steering column face down in front of panel opening. Reaching around behind, connect ammeter wires, right printed circuit board connector, wiper, emergency warning switch connectors and vacuum gauge hose or tachometer wire if so equipped.

(2) While holding headlight switch in position, install switch bezel and tighten with Tool C-3824. Insert knob and shaft in headlight switch until shaft engages with a distinct "click".

(3) Reaching up under panel, guide wiper switch into position and install bezel nut with Tool C-3824. Slip knob on shaft.

(4) Position air conditioning or heater controls and tighten mounting screws. Install slide control knobs.

(5) Roll cluster up into panel opening and install four screws in under side of crash pad and three screws in front lower face of cluster.

(6) Reaching up under panel, connect left printed circuit board multiple connector and speedometer cable.

(7) Connect speedometer cable at speedometer.

(8) Remove tape from top of steering column, connect battery ground cable and test operation of gauges and switches.

INSTRUMENT CLUSTER (Fig. 3)

Removal—Belvedere and Satellite Models

(1) Remove steering column trim cover (four mounting screws).

(2) Roll carpet back and remove lower mounting plate (four mounting bolts).

(3) Remove steering column clamp (two attaching nuts).

(4) Remove upper trim moulding (six screws), (so equipped).

(5) Remove left side trim moulding (one screw), (so equipped).

(6) Remove left side trim plate by removing one mounting screw and on "T" bolt, (so equipped).

(7) Remove radio trim plate (two screws).

(8) Remove the four switch bezel mounting screws and remove switch bezel.

(9) Remove ignition switch. See "Switch Replacement".

(10) Remove center air conditioning opening cover

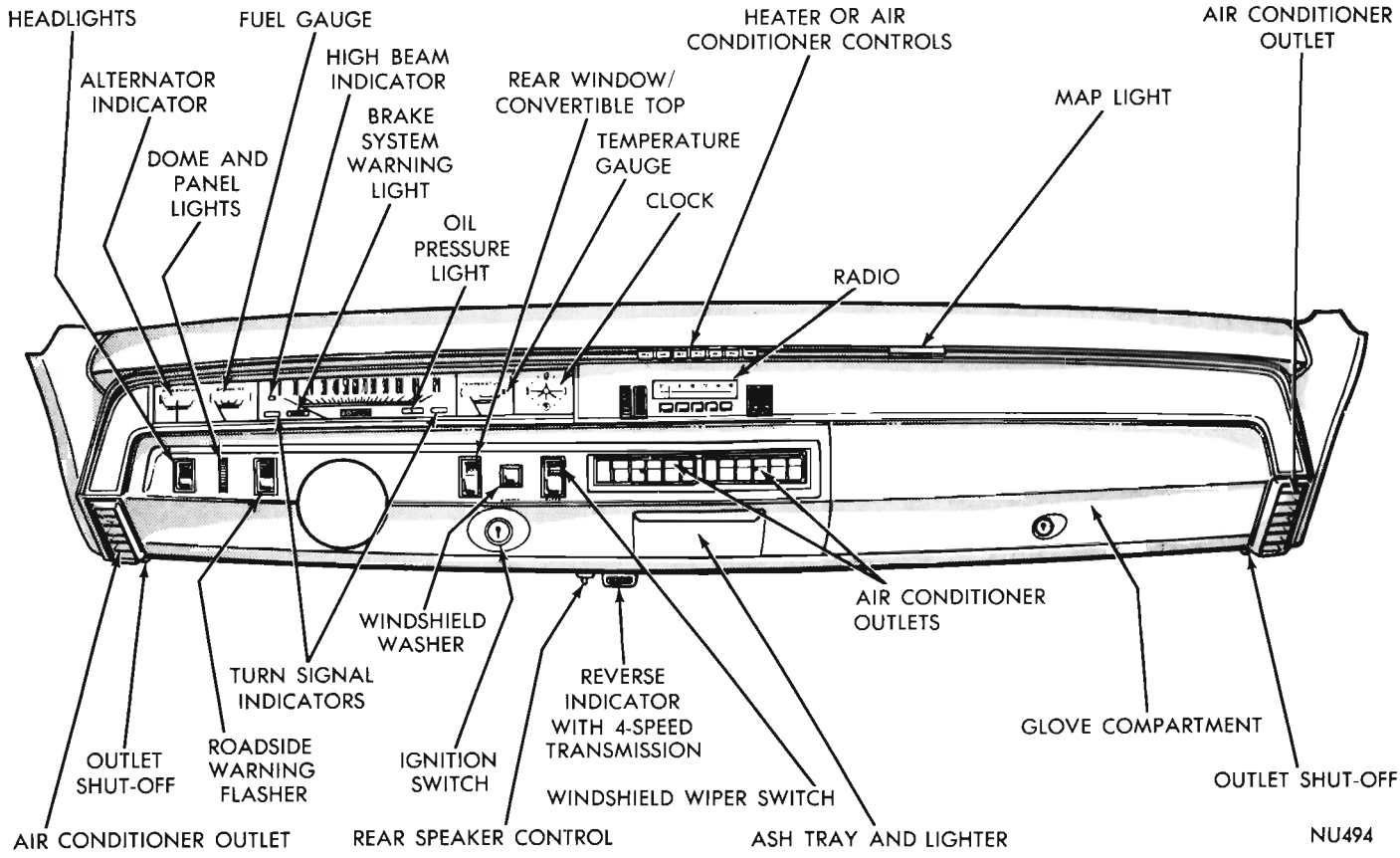

Fig. 3—Instrument Panel—Belvedere and Satellite Models

(so equipped) by removing one mounting screw.

(11) Remove lower trim pad (six mounting bolts under the panel and four mounting screws from front panel).

(12) Disconnect speedometer cable from under panel.

(13) Remove six cluster mounting screws and rock the cluster out, disconnect wiring harness and remove cluster.

Installation

(1) Rest cluster on edge of panel opening, connect wiring harness connections then carefully install cluster and attaching screws.

(2) Connect speedometer cable to speedometer.

(3) Install lower trim pad and center air conditioning cover.

(4) Install ignition switch.

(5) Install switch bezel and radio trim plate.

(6) Install left and upper trim moldings.

(7) Install steering column clamp and attaching nuts (finger tight).

(8) Install steering column lower mounting plate. Tighten bolts securely.

(9) Tighten upper column clamp nuts securely and install column trim cover.

(10) Connect battery ground cable and test operation of all lights and gauges.

INSTRUMENT CLUSTER—Fury and VIP (Figs. 4 and 5)

LAMP PANEL

Removal

(1) Disconnect ground cable. Remove nine panel mounting screws.

(2) Lower the lamp panel assembly slightly to disconnect the lamp harness from main harness.

(3) Remove lamp panel from instrument panel.

Installation

(1) Position lamp panel in opening in instrument panel and connect lamp harness to main harness.

(2) Complete lamp panel installation and install panel mounting screws.

(3) Connect battery ground cable.

RADIO TRIM PANEL (Cluster Trim Bezel)

Removal

(1) Disconnect battery ground cable.

(2) Remove lamp panel.

(3) Remove steering column cover.

(4) Remove the two lower trim bezel mounting screws.

(5) Unscrew tape player selector knob from bezel, (units so equipped).

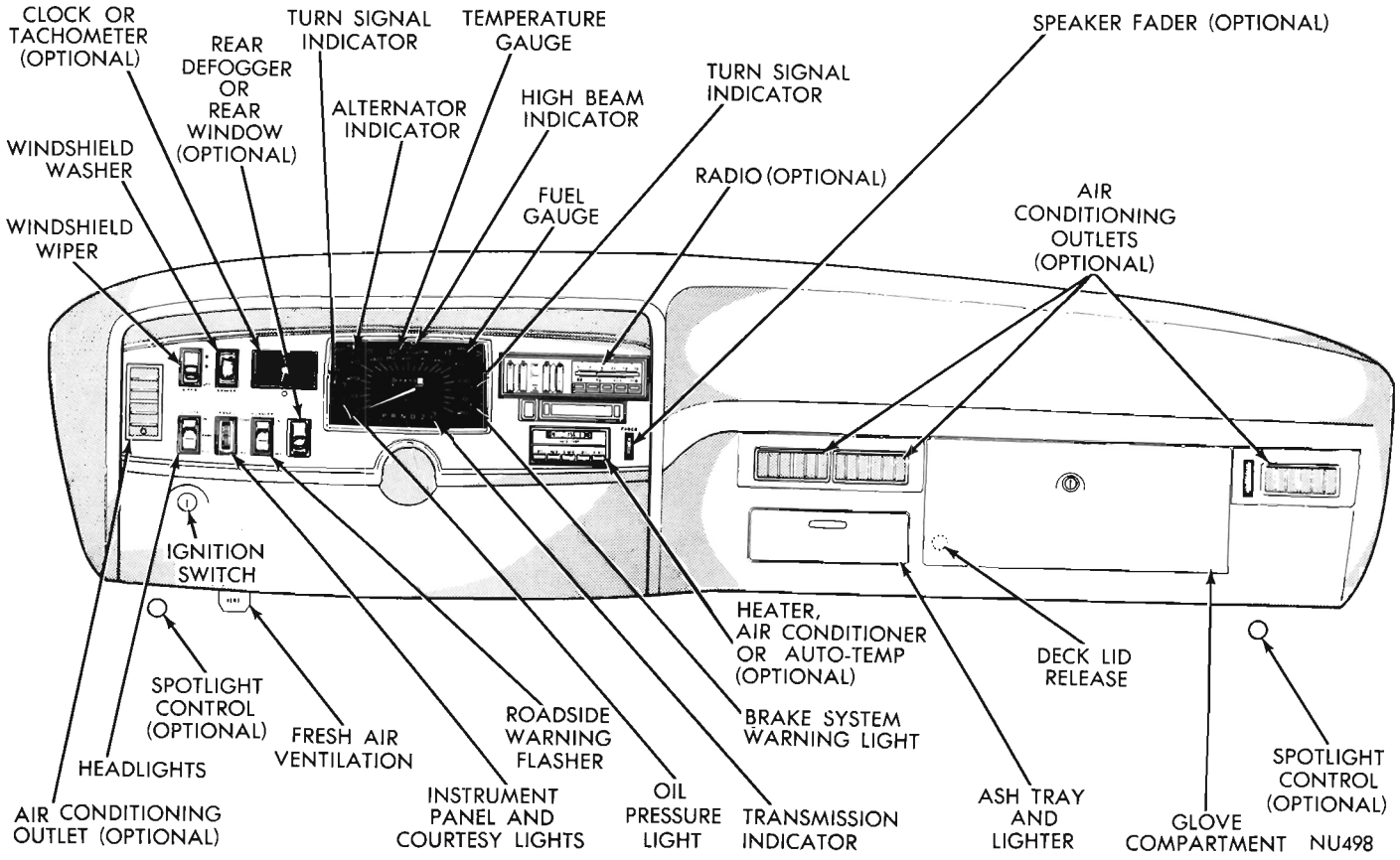

Fig. 4—Instrument Panel—Fury and VIP Models

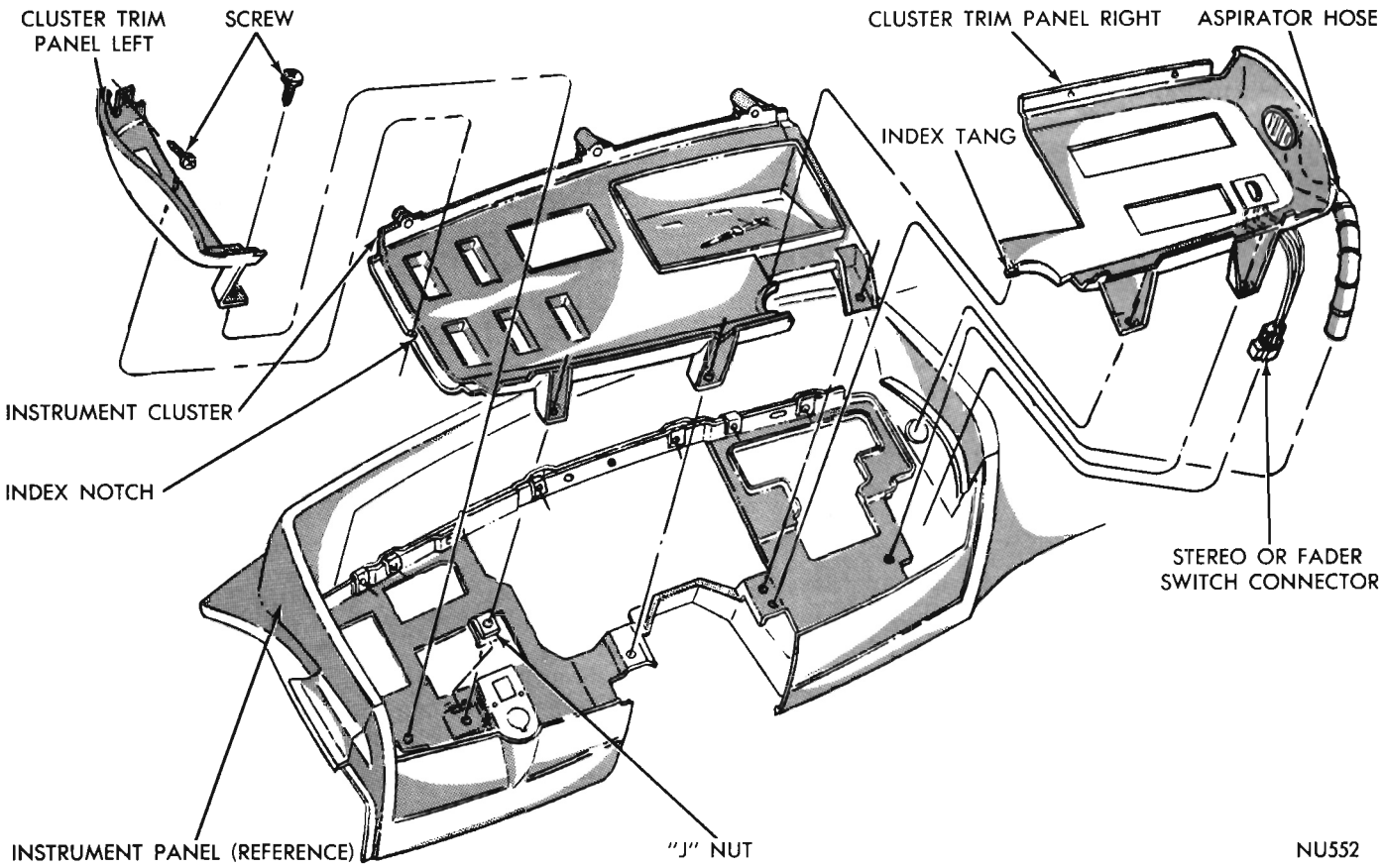

Fig. 5—Instrument Cluster—Removal and Installation—Fury and VIP

(6) Remove trim bezel.

Units equipped with Auto-Temp perform steps 1, 2 and 3 above and proceed as follows:

(a) Disconnect the center air conditioner distribution duct from the heater to the instrument panel lower reinforcement (one screw).

(b) Reaching up on the top of the heater air conditioner housing at center of housing and disconnect the sensor hose.

(c) Disconnect electrical lead and remove trim bezel from the instrument panel carefully to avoid damaging the sensor tube or electrical leads.

Installation

(1) Position radio trim panel and carefully install sensor tube and electrical leads, (so equipped).

(2) Connect center air conditioner distribution duct.

(3) Install tape player selector knob to bezel, so equipped.

(4) Install trim bezel mounting screws.

(5) Install steering column cover.

(6) Install lamp panel.

(7) Connect battery ground cable.

LEFT TRIM PANEL (Air Conditioner Spot Cooler)

Removal

(1) Remove lamp panel.

(2) Remove steering column cover.

(3) Remove the top trim bezel mounting screws and remove bezel (spot cooler).

Installation

(1) Position and install bezel and mounting screws.

(2) Install steering column cover.

(3) Install lamp panel.

INSTRUMENT CLUSTER

Removal

(1) Disconnect battery ground cable.

(2) Remove lamp panel.

(3) Remove steering column cover.

(4) Remove radio trim bezel.

(5) Remove left trim bezel and/or spot cooler (so equipped).

(6) Remove left and center air conditioner duct (so equipped).

(7) From under instrument panel disconnect electrical leads to switches and clocks, lamp assemblies from cluster, and speedometer cable from speedometer head.

(8) Remove gear shift indicator pointer from column.

(9) Tape steering column to protect paint finish.

(10) Remove three steering column upper clamp nuts and three bolts at lower support at floor.

(11) Carefully lower steering column and allow steering wheel to rest on seat cushion.

(12) Remove eight screws mounting cluster to instrument panel; roll cluster assembly out, disconnect electrical connections to high beam indicator, fuel gauge, alternator (ammeter) and temperature gauge and remove cluster to padded work bench for service.

Installation

(1) Rest cluster in panel opening and connect electrical connections to temperature gauge, ammeter, fuel gauge and high beam indicator then roll cluster into panel opening, top edge first.

(2) Install all cluster attaching screws finger tight then tighten all screws securely.

(3) Raise steering column into position and install upper clamp nuts and lower support bolts. Tighten securely.

(4) Install gear shift indicator.

(5) From underside of instrument panel connect speedometer cable at speedometer head, electrical leads to switches, and clock, and install lamp assemblies into cluster base.

(6) Connect left and center air conditioner ducts and install attaching screw at instrument panel.

(7) Install left trim bezel spot cooler.

(8) Install radio trim bezel.

(9) Install steering column cover.

(10) Install lamp panel.

(11) Connect battery ground cable and test operation of all switches lamps and gauges.

(12) Remove tape from steering column.

STEERING COLUMN COVER—Fury and VIP

Removal

(1) Remove seven steering column cover mounting screws.

(2) Remove cover from instrument panel.

Installation

(1) Position panel on instrument panel.

(2) Enter all seven screws and tighten finger tight.

(3) Determine that panel is properly positioned then tighten all screws securely.

INSTRUMENT REPLACEMENT All Models (Except Fury and VIP)

To service the instruments of any cluster, it is necessary to remove the cluster first. See "Instrument Cluster Removal and Installation".

(1) **On all models** place cluster face down on padded bench, remove housing to bezel screws and carefully separate the two.

(2) Remove terminal nuts of gauge to be serviced and remove gauge from front of housing.

(3) Position new gauge in housing and install mounting nuts.

(4) Carefully position bezel on cluster housing. Install retaining screws and odometer reset knob.

Replacement—Fury and V.I.P. Models

(1) Place cluster assembly on a padded area of the work bench.

(2) Remove gear shift indicator housing from cluster housing (two screws).

(3) Remove cluster from bezel assembly (four screws).

(4) Remove cluster lens from cluster housing by turning up the two upper cluster housing mounting tabs.

(5) Remove the two speedometer mounting screws located on the back of cluster housing.

(6) Remove the speedometer assembly, ammeter, temperature gauge or fuel gauge as necessary.

SPEEDOMETER REPLACEMENT (All Models Except Fury and VIP)

To replace the speedometer, it is necessary to remove the instrument cluster. See "Instrument Cluster Removal and Installation."

(1) With cluster face down on padded work bench, separate cluster housing from cluster bezel.

(2) Remove two speedometer mounting screws and rubber washers from back of cluster housing. Carefully lift speedometer from front of housing.

(3) Position new or repaired speedometer head into housing, aligning screw holes with holes in speedometer head.

(4) Install two rubber washers and retaining screws in back of housing and tighten screws.

(5) Place bezel on cluster housing and install screws.

SPEEDOMETER REPLACEMENT—Fury and VIP

To replace the speedometer, it is necessary to remove the instrument cluster. See "Instrument Cluster Removal and Installation."

(1) Place cluster on padded work bench.

(2) Remove gear shift indicator housing from cluster housing (two screws).

(3) Remove cluster assembly from bezel assembly (four screws).

(4) Remove cluster lens from cluster housing by relieving the two upper cluster housing mounting tabs.

(5) Remove two speedometer mounting screws located on the back of the cluster housing and carefully remove the speedometer.

PRINTED CIRCUIT BOARD REPLACEMENT

To replace the printed circuit board on the cluster housing, it is necessary to remove the instrument cluster. See "Instrument Cluster Removal and Installation."

The printed circuit board is removed from the instrument cluster by removing the screws retaining the cluster bezel to the cluster housing. Remove the fuel gauge and temperature gauge terminal nuts and remove the gauges. Remove the screws from the printed circuit board and lift printed circuit board from back of the housing.

After installation of a new printed circuit board, transfer the light sockets and the voltage limiter from the old one. Upon completion of the instrument cluster installation, test all instruments.

TEST OUT OF VEHICLE

Printed Circuit Board

A visual inspection of the conductors should be made for cracks or damaged circuits. If no visual damage is evident, each circuit should be tested for continuity with an ohmmeter or a test light. Should an open circuit be detected, the printed circuit board should be replaced.

Fuel or Temperature Gauge

(1) Connect a jumper wire to voltage limiter input terminal. Connect other end of the jumper wire to positive post (+) of a 12 volt test battery.

(2) Connect a jumper wire from negative (—) post of battery to instrument cluster base (ground).

(3) Connect one lead from Tester C-3826 to gauge sending terminal being tested.

(4) Connect remaining tester lead to instrument cluster base (ground).

When the gauge tester is in "L" position, the gauge being tested should read on the low side of dial. With gauge tester on "M", the gauge should read in the center of the dial scale and on the high end of the dial when pointer of tester is placed on "H". If gauges do not perform as stated, inspect for an open printed circuit before replacing gauge.

Caution: A direct connection from a 12 volt battery will damage the gauges or printed circuit boards.

Fuel Tank Sending Unit

(1) Remove tank sending unit from fuel tank.

(2) Using an Ohmmeter with a 0 to 100 ohm scale, connect one lead to body of sending unit and the other lead to terminal in center of unit.

(3) Hold unit so float arm contacts "Empty Stop." The reading on the Ohmmeter scale should be 73 Ohms, plus or minus 12.0 ohms.

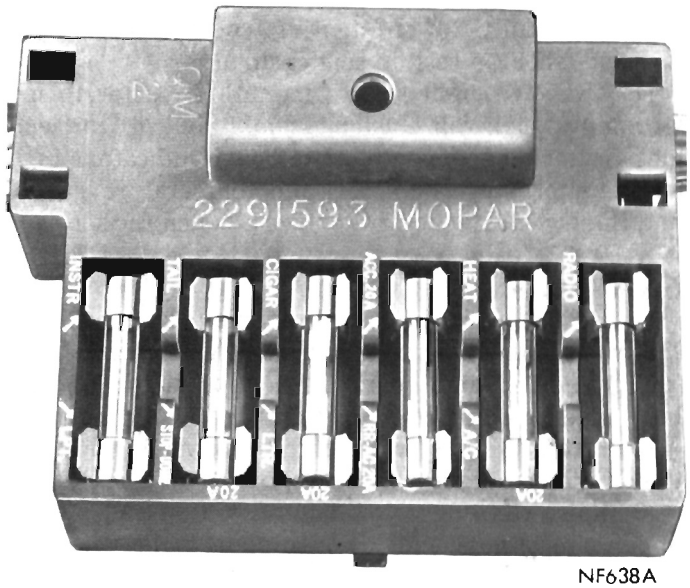

Fig. 6—Fuse Block—All Models Except Fury and VIP

(4) Raise arm to "Full Stop." The reading should now be 9.6 ohms, plus or minus 1 ohm.

(5) If unit does not perform to these specifications, inspect stops or arm for possible distortion. If stops or arm cannot be repaired or are not damaged, unit should be replaced. **It is important that the ohmmeter is accurate. An accurate value cannot be obtained if the ohmmeter has an error of more than 1 ohm in 10. Test the ohmmeter with a known 10 ohm resistor.**

FUSE BLOCK (Fig. 6)

The fuse block for Valiant and Barracuda models is located at the far left corner on the instrument panel lower reinforcement brace. For Belvedere and

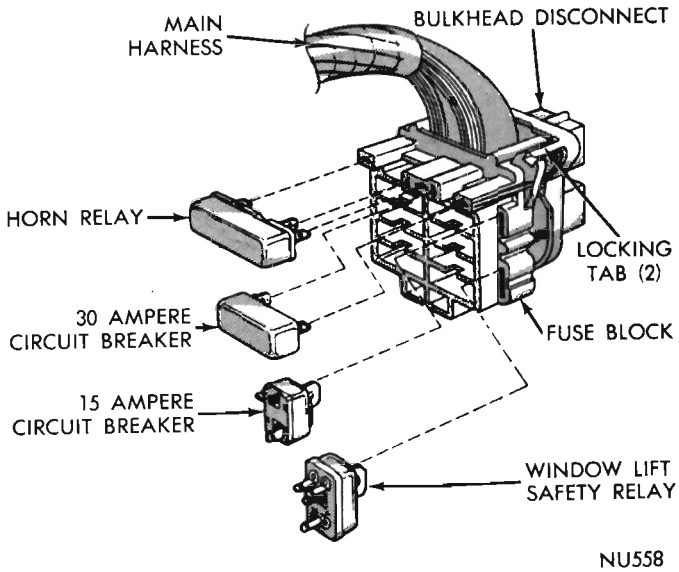

Fig. 7—Removing or Installing Circuit Breakers and Relays to Fuse Block—Fury and VIP

Satellite models the fuse block is located to the left of the glove box and is retained to the instrument panel support bracket in an upright position by one self-tapping screw. The fuse name and capacity is printed on the front face of the fuse block. Refer to "Specifications."

FUSE BLOCK—Fury and VIP (Figs. 7 and 8)

The fuse block is located in the passenger compartment under the instrument panel to the left of the brake pedal and is retained to the bulkhead disconnect by two locking tabs.

To release the fuse block from the bulkhead disconnect, unlock locking tabs from fuse block and slide indexing barrels out of the bulkhead disconnect (Fig. 8). The fuse name and capacity is printed on the front face of the fuse block. Refer to "Specifications."

CIRCUIT BREAKERS

Use only identical type and amperage value circuit breakers as replacements for service. See "Specification" for the location of circuit breakers.

SWITCH REPLACEMENT

Headlight Switch—Valiant and Barracuda Models

The headlight switch is replaced from under the instrument panel.

(1) Remove screw retaining fuse block to panel and move fuse block out of the way.

(2) Reaching under panel, depress release button on right side of switch and pull knob out of switch.

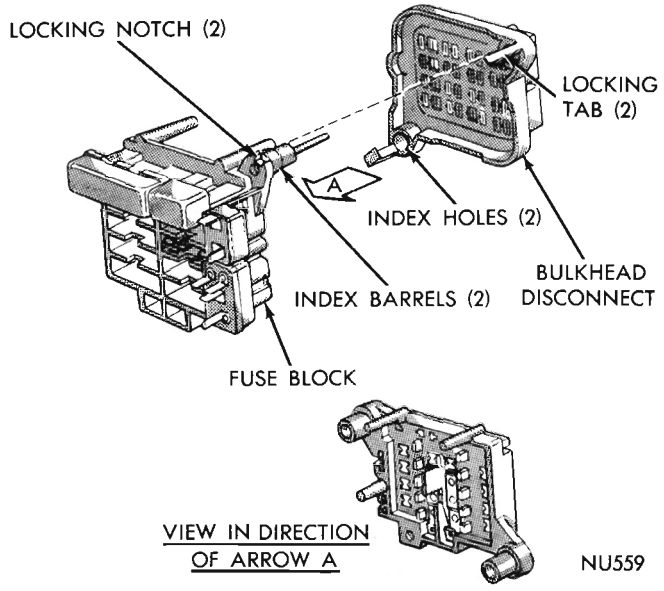

Fig. 8—Removing or Installing Fuse Block—Fury and VIP

(3) Remove bezel nut with Tool C-3824 and lower switch under panel to disconnect multiple connector and remove switch.

(4) Connect multiple connector to switch and position switch in panel opening.

(5) Install bezel nut and tighten with Tool C-3824.

(6) Insert switch knob into switch till a distinct "click" is heard.

(7) Position fuse block under panel and secure with screw.

Headlight Switch—Belvedere and Satellite Models

(1) Disconnect battery ground cable at battery.

(2) Disconnect all wiring connectors from back of switches.

(3) Remove the switch bezel mounting screws.

(4) Remove switches and bezel assembly and remove the headlight switch. **CAUTION: Carefully pull trim bezel straight to avoid damaging trim pad.**

Headlight Switch—Fury and VIP

(1) Remove all air conditioner distribution ducts from underside of panel, (so equipped).

(2) From underside of instrument panel, disconnect electrical leads at switch.

(3) Remove two mounting screws and remove switch.

Wiper or Washer Switch—Valiant and Barracuda Models

On Valiant models equipped with factory installed air conditioning, it will be necessary to remove the outlet duct from the lower edge of the instrument panel. Remove two outlet duct retaining nuts and pull duct straight down.

To replace the wiper switch, loosen allen screw in knob and remove knob. Using Tool C-3824, remove bezel nut, lower switch below panel and disconnect multiple connector. Connect multiple connector to replacement switch and position switch in panel opening. Install bezel nut and tighten with Tool C-3824.

Windshield Wiper or Washer Switch—Belvedere and Satellite

(1) Disconnect battery ground cable at battery.

(2) Disconnect all wiring connectors from back of switches.

(3) Remove the switch bezel mounting screw (four).

(4) Remove switches and bezel assembly and remove the windshield wiper switch. **CAUTION: Carefully pull bezel straight to avoid damaging trim pad.**

Windshield Wiper or Washer Switch

(1) Remove all air conditioner distribution ducts from underside of panel (so equipped).

(2) From underside of instrument panel disconnect electrical leads at switch.

(3) Remove two mounting screws and remove switch.

Emergency Flasher Switch—All Models

To replace the flasher switch, remove fuse block retaining screw and move fuse block out of way (Valiant models only). Working under the panel, remove the two cross recessed head screws from the left side of the switch with a magnetized screw driver. Lower switch far enough to disconnect wire connector before removing switch. On Barracuda models remove switch mounting nut and remove switch.

To install, connect wire connector to switch terminals and position switch toggle in panel opening. Working under panel, install and tighten two retaining screws using a magnetized screw driver.

Ignition Switch—All Models Except Fury and VIP

The ignition switch is replaced by removing the bezel nut with Tool C-3824 and lowering the switch behind the panel far enough to remove the multiple connector. Before installing the replacement switch, connect the multiple connector and position switch in panel. Install bezel nut and tighten securely with Tool C-3824.

Ignition Switch—Fury and VIP

(1) Remove air conditioner dual extension elbow on left side of instrument panel from under panel.

(2) Remove bezel nut from ignition switch.

(3) Remove switch from instrument panel and carefully pry off harness switch cover from back of ignition switch.

Emergency (Roadside Warning) Flasher Switch—Fury and VIP

(1) Remove all air conditioner distribution ducts from underside of panel; (so equipped).

(2) From underside of instrument panel disconnect electrical leads to flasher switch.

(3) Remove two mounting screws from back of cluster base and remove switch.

Emergency (Roadside Warning) Flasher Switch—Belvedere and Satellite

The emergency flasher switch is serviced in the same manner as the headlight switch.

Emergency (Roadside Warning) Flasher Switch—Valiant and Barracuda

(1) Remove emergency flasher from mounting bracket.

(2) Remove switch spanner nut with Tool C-3824.

(3) Disconnect wire connector and pull switch out from under panel.

(4) Connect multiple connector to replacement switch from under panel and insert toggle end of switch through opening in panel and install spanner nut with Tool C-3824.

Dimmer Switch—Fury and VIP

(1) Remove all air conditioner distribution ducts from underside of panel (so equipped).

(2) From underside of instrument panel disconnect electrical leads at switch.

(3) Remove two mounting screws from back of cluster base and remove switch.

HEATER OR AIR CONDITIONING CONTROLS

Removal—Valiant and Barracuda Models

(1) Disconnect battery ground cable.

(2) Remove radio. See "Radio Removal", Accessories, Group 1.

(3) Remove control lever knobs by loosening allen set screws and pulling straight off.

(4) From under panel, remove two mounting nuts from studs and lower control assembly to disconnect control cables, switch feed wires and vacuum hose connector if air conditioned equipped. (Cut off retaining clips with wire cutters and replace with new clips).

(5) Remove the control assembly for service.

To separate the blower switch from the control assembly, remove two retaining screws.

Installation

(1) Before installing control assembly in panel, connect switch feed wires, vacuum hose connector, if air conditioning equipped and control cables. (Use new retaining clips). Adjust cables. See "Control Cable Adjustments", Accessories, Group 1.

(2) Position control assembly on mounting studs and secure with two mounting nuts. To install the air conditioning control, locate the temperature control arm in the panel slot first and feed the push buttons in their respective slots from right to left.

(3) Install control knobs on the levers and tighten allen screws.

(4) Install radio. See "Radio Installation", Accessories, Group 1.

(5) Connect battery ground cable.

Removal—Belvedere and Satellite

(1) Remove the instrument cluster. See "Instrument Cluster Removal."

(2) Remove the two control mounting screws from the upper instrument panel flange.

(3) Pull the control assembly through the instru-

ment cluster opening, disconnect the control cables (or the vacuum connector if air conditioning equipped) and the blower switch multiple connector and remove the assembly.

Installation

(1) Position the control assembly in the instrument panel opening, connect the control cables and the blower switch multiple connector (or the vacuum connector if air conditioning equipped). Adjust the control cables. See "Control Cable Adjustment, Heaters", Group 1.

(2) Install the control assembly on the instrument panel flange with the two mounting screws.

(3) Install the instrument cluster. See "Instrument Cluster Installation."

Removal—Fury and VIP

(1) Remove lamp panel.

(2) Remove steering column cover.

(3) Remove radio trim bezel.

(4) Remove the two heater control or air conditioner control mounting nuts.

(5) Remove lower center air conditioner duct, (so equipped).

(6) Disconnect electrical leads and vacuum hoses.

(7) Remove heater, air conditioner mounting bracket (one screw) and remove control.

Installation

(1) Install heater or air conditioner control and bracket.

(2) Connect electrical leads and vacuum hoses to the control.

(3) Install lower center air conditioner duct.

(4) Install control mounting nuts.

(5) Install radio trim bezel.

(6) Install steering column cover.

(7) Install lamp panel.

AIR CONDITIONER OUTLET—(Center)—Fury and VIP

Removal

(1) Remove air conditioner distribution duct (center only).

(2) Remove center outlet bezel mounting screws (two).

(3) Remove center outlet from panel.

Installation

(1) Position center outlet and install bezel mounting screws.

(2) Install center distribution duct. Reach up under instrument panel and install center cooler hose to bezel outlet, then reinstall center distribution duct.

Left Spot Cooler—Fury and VIP

Removal

(1) Remove lamp panel.

(2) Remove steering column cover.

(3) Remove two spot cooler bezel mounting screws and remove spot cooler.

Installation

(1) Position spot cooler bezel on instrument panel and install mounting screws.

(2) Install steering column cover.

(3) Install lamp panel.

Right Spot Cooler—Fury and VIP

Removal

(1) Remove two spot cooler mounting screws and remove spot cooler from panel.

Installation

(1) Install spot cooler and two mounting screws. Reach up under instrument panel and insert right spot cooler duct into housing.

REAR SPEAKER FADER OR STEREO CONTROL SWITCH—Fury and VIP

Removal

(1) Remove radio trim bezel.

(2) Remove the two switch mounting screws.

(3) Disconnect electrical leads and remove switch from radio bezel.

Installation

(1) Connect electrical leads to switch and install switch on radio bezel.

(2) Install radio trim bezel.

TACHOMETER—Fury

Removal

(1) Remove instrument cluster. See "Cluster Removal" Group 8 "Electrical".

(2) Remove the three tachometer mounting screws from rear of cluster bezel and remove tachometer.

Installation

(1) Position tachometer on cluster bezel and install the three mounting screws.

(2) Install instrument cluster. See "Cluster Installation" Group 8 "Electrical".

ASH RECEIVER—Fury and VIP

Removal

(1) Remove ash receiver receptacle and face plate assembly from the housing.

(2) Remove ash receiver housing mounting (three screws).
(3) Remove air conditioner distribution duct.
(4) Remove radio mounting bracket.
(5) Remove center air outlet tube at the ash receiver housing only. Move the hose up and out of the way.
(6) Disconnect electrical leads at lighter and lamp assemblies.
(7) Move ash receiver housing up at an angle and then turn it down and out through ash receiver opening in instrument panel.

Installation

(1) Enter ash receiver housing at an angle through instrument panel opening then move it up into position.
(2) Connect electrical leads at lighter and lighter lamp.
(3) Connect center air outlet tube.
(4) Install radio mounting bracket.
(5) Install air conditioner distribution duct.
(6) Install ash receiver housing mounting screws.
(7) Install ash receiver receptacle and face plate assembly.

REVERSE INDICATOR LIGHT

Removal

(1) From under instrument panel remove nut attaching lamp to instrument lower panel.
(2) Disconnect electrical lead and remove indicator lamp.

Installation

(1) Position indicator on column cover and install lamp mounting nut.
(2) Connect electrical lead. To replace lamp bulb only, reach under instrument panel and disconnect indicator lamp socket from indicator lamp housing and replace bulb.

ACCESSORY SWITCH—Fury and VIP

Removal

(1) Remove cluster assembly.
(2) Remove two switch mounting screws and remove switch from cluster bezel.

Installation

(1) Install switch and mounting screws on cluster bezel.
(2) Install cluster assembly.

GLOVE BOX—Fury and VIP

Removal

(1) Remove glove box door check arm (two screws).
(2) Remove glove box mounting screws (six screws).
(3) Remove two screws and two nuts mounting latch catch and remove catch.
(4) Fold glove box and remove glove box through glove box opening.

Installation

(1) Enter glove box through glove box door opening and unfold into position.
(2) Install latch, mounting screws and nuts.
(3) Install glove box mounting screws.
(4) Install glove box door check arm mounting screws.

WINDSHIELD WIPER SYSTEM

INDEX

	Page
End Play Adjustment	84
General Information	82
Links	87
Lubrication	88
Motor Installation	86
Motor Removal	86
Panel Switch Tests	84
Pivot Replacement	88
Service Diagnosis	83
Wiper Arm Adjustment	83

GENERAL INFORMATION

The windshield wipers can be operated with the windshield wiper switch only when the ignition switch is in the **Accessory** or **Ignition** position. A circuit breaker, integral with the wiper switch protects the circuitry of the wiper system and the vehicle. All models are equipped with a two speed wiper system as standard equipment. A variable speed wiper system is offered as optional equipment on Valiant and Barracuda models and a three speed system on Belvedere, Satellite, Fury and V.I.P. models.

Variable speed and three speed wiper motors are controlled by resistors in the field circuit. Variable speed motors have a rheostat built into the wiper switch. Three speed motors have a high speed resistor mounted on the switch and a resistance wire in the harness for medium speed.

Two speed wiper motors have permanent magnet fields and are controlled by feeding power to two different brushes for low and high speed. For low speed operation the current first flows through the

torque limiting resistor and then to the low speed brush (terminal "L" Fig. 3). For high speed, the brush (terminal "H") is fed directly.

The two speed wiper system on Valiant, Barracuda, Belvedere and Satellite models, will complete the wipe cycle and return to the park position when the switch is turned "Off". These two speed systems park in the lowest portion of the wipe pattern.

A depressed parking feature in the variable speed wiper system on Valiant, Barracuda and the three speed system on Belvedere, Satellite, Fury and V.I.P. models, is accomplished by reversing the rotation of the motor and the use of an eccentric motor shaft. When the wiper switch is turned "Off" the motor rotation is reversed, the motor inner shaft stops and the outer shaft rotates 180° degrees. This in effect, lengthens the drive link slightly to park the blades in the depresser position. The linkage shortens again when the motor is turned "On" and reverses the action.

The two speed wiper system used on the Fury and V.I.P. models accomplishes its depressed parking action by reversing the rotation of the motor and the use of a parking cam on the motor crank pin. When the wiper switch is turned "Off", the motor direction is reversed and at the same time, the parking cam rotates 180° degrees, lengthening the drive link slightly to park the blades in a depressed position. Motor operation in the wipe direction returns the cam to "run" position to restore the normal link and wipe pattern.

SERVICE DIAGNOSIS

Condition	Possible Cause	Correction
WIPER FAILS TO OPERATE	(a) Binding Linkage.	(a) Relieve binding condition.
	(b) Faulty instrument panel switch.	(b) Test Switch. See "Panel Switch Tests."
	(c) Linkage disconnected.	(c) Repair as necessary.
	(d) Faulty motor.	(d) Test motor. See "Motor Testing."
	(e) Open or grounded wiring.	(e) Test wiring for continuity. Repair as necessary.
WIPER BLADES NOT PARKING PROPERLY	(a) Arm set at incorrect position.	(a) Adjust arm. See "Wiper Arm Adjustment."
	(b) Motor park switch timing incorrect. (Variable and 3-speed only).	(b) Adjust park switch. See "Motor Park Switch Timing."
BLADES SLAP AGAINST WINDSHIELD MOULDINGS ON DRY GLASS	(a) Improperly adjusted wiper arm.	(a) See "Wiper Arm Adjustment."
	(b) Looseness of the motor crank or other drive parts.	(b) Tighten or replace part.
BLADES CHATTER	(a) Twisted arm holds blade at wrong angle to glass.	(a) Replace wiper arm. Do not attempt to straighten bent or twisted arm.
	(b) Bent or damaged blades.	(b) Replace blades.
	(c) Foreign substances such as body polish on glass or blades.	(c) Clean the glass or blades.
MOTOR WILL NOT STOP WHEN INSTRUMENT PANEL SWITCH IS TURNED "OFF"	(a) Motor park switch failure in the "closed" position.	(a) Replace motor assembly.
MOTOR STOPS IN ANY POSITION WHEN INSTRUMENT PANEL SWITCH IS TURNED "OFF"	(a) Motor park switch failure in the open position.	(a) Replace motor assembly.
	(b) Open parking circuit or open field circuit.	(b) Test continuity of blue, red and green wiring circuit and correct as necessary.
NO SPEED CONTROL	(a) Open circuit in red or green wiring (Variable or 3-speed); (red or brown wire—2-speed).	(a) Test continuity and correct as necessary.
	(b) Defective control switch.	(b) Replace switch.

SERVICE PROCEDURES

WIPER ARM ADJUSTMENT— Variable or Three Speed or Two Speed System on Fury and V.I.P.

To determine if an adjustment is required, apply a constant **upward** force of 50 ounces parallel to the windshield glass at the end of the wiper arm (where the blade is attached to the arm). With the force applied, pull the wiper blade away from the windshield glass once or twice to prevent glass friction from af-

fecting upward movement of the wiper arm and blade. With the force applied, the clearance between the tip of the wiper blade and the windshield lower moulding (Valiant, Barracuda, Belvedere Satellite) or the side of the wiper blade and the blade stop (Fury and V.I.P.) should be as follows:

Models	Clearance in Inches	
	Right	Left
Valiant-Barracuda	.5 to 2.25	.25 to 2.00
Belvedere-Satellite	.5 to 2.50	.25 to 2.25
Fury and V.I.P. Concealed Wipers	.75 to 2.50	.25 to 2.00

For non-concealed wiper blades, if the clearance is not in the specified range, use Tool C-3982 and reposition the wiper arm and blade assembly (Fig. 2). For concealed wipers, lift the wiper arm and insert a .090 inch diameter pin or drill (Fig. 1). With the pin in place, pull the wiper arm off the wiper pivot with a rocking motion.

Two Speed (Except Fury and V.I.P.)

To determine if an adjustment is required apply a constant **downward** force of 25 ounces, parallel to the windshield glass, at the end of the wiper arm (where the wiper blade is attached to the arm). With the 25 ounce force applied pull the wiper blade away from the windshield glass once or twice to prevent glass friction from affecting downward movement of the wiper arm and blade. With this force applied the clearance between the tip of the wiper blade and the windshield moulding should be as follows:

Models	Clearance in Inches Between Tip of Blade and Windshield Moulding	
	Right	Left
Valiant-Barracuda	.5 to 2.25	.25 to 2.00
Belvedere-Satellite	1.00 to 3.00	.25 to 2.25

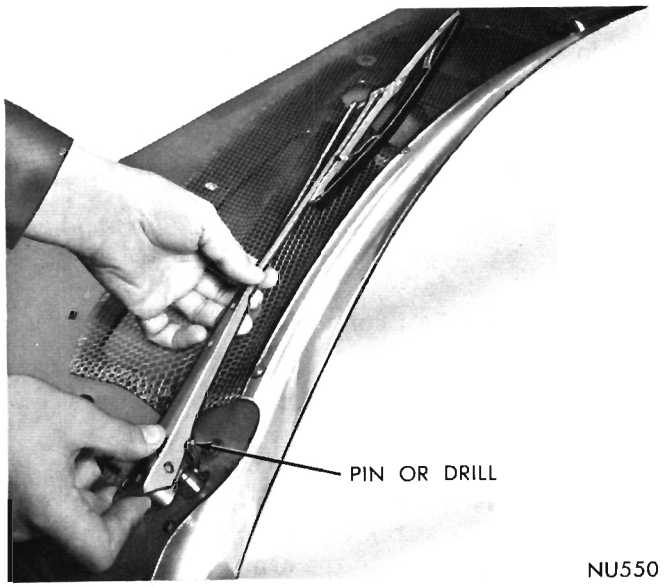

Fig. 1—Removing Wiper Arm and Blade Assembly (Fury and V.I.P.)

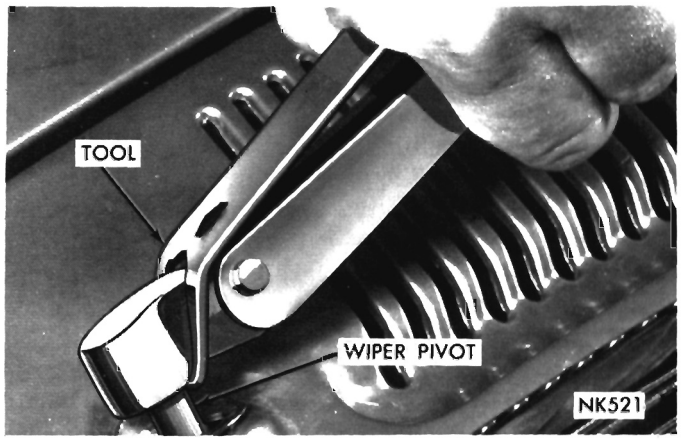

Fig. 2—Removing Wiper Arm and Blade (Valiant, Barracuda, Belvedere and Satellite)

If the clearance is not in the specified range use Tool C-3982 and reposition the wiper arm and blade assembly (Fig. 1).

CAUTION: The use of a screwdriver or other prying tool to remove an arm may distort it in a manner that will allow it to come off the pivot shaft in the future, regardless of how carefully it is installed. NEVER under any circumstances push or bend the spring clip in the base of the arm in an attempt to release the arm. This clip is self-releasing.

END PLAY ADJUSTMENT

(Vendor Manufactured Variable and 3-Speed Only)

To adjust the armature shaft end play, turn the adjustment screw in until it bottoms then back-off 1/8 turn (Fig. 3). This adjustment can be made without removing the wiper motor from the vehicle.

PANEL SWITCH TESTS

Two-Speed

To test the switch, disconnect the wiring and re-

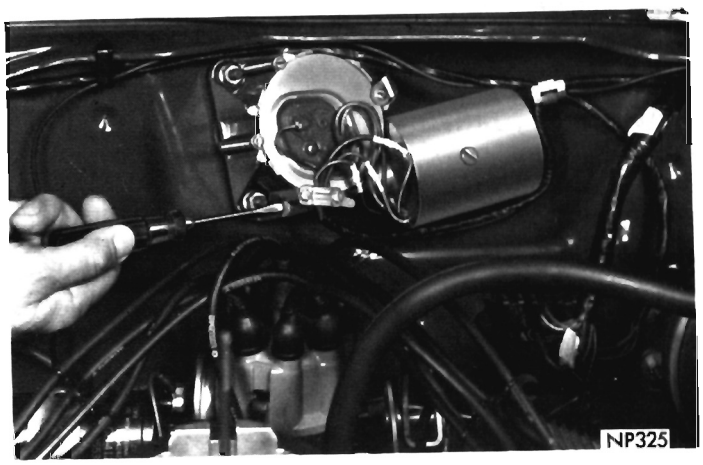

Fig. 3—End Play Adjustment (Variable and Three Speed)

move from the instrument panel. For removal and installation of the wiper switch see "Instrument Panels".

Using a continuity tester or an ohmmeter, test for continuity (no resistance) between the contact terminals of the switch as shown in the following chart. For test purposes, the first position is the "Off" position. The "Low" position is the first detent past the "Off" position. The "High" position is the second detent of the switch. The bench test of the switch does not require the use of a twelve volt battery. "Ground" is the case of the switch.

SWITCH CONTINUITY CHART

Chrysler Manufactured Two Speed— Valiant and Barracuda

Off	Low	High
B to B/U. B to P1. A to P2.	B to B/U. B to P1. B to A.	B to B/U. B to P1. B to H.
H-open	P2-open H-open	P2-open A-open

SWITCH CONTINUITY CHART

Chrysler Manufactured Two Speed— (Belvedere and Satellite)

Off	Low	High
B to B/U. B to P. A to F2.	B to B/U. B to P. B to A.	B to B/U. B to P. B to F1.
F1-open	F2-open F1-open	F2-open A-open

Variable and Three Speed

The two and three speed switches contain a resistor while the variable speed uses a rheostat to provide a means of controlling the current flow to the motor. The switch is designed to provide a circuit to the motor to reverse the current to the field winding which reverses the direction of the armature. A circuit breaker, built into the switch, protects the circuitry.

To test the switch, disconnect the wiring to the switch and remove the switch from the instrument panel. For removal and installation of the wiper switch, see "Instruments and Indicators."

Using a continuity tester or an ohmmeter, test for continuity (no resistance) between the contact terminals of the switch as shown in the following chart. For test purposes the "Park" position is the switch "Off" position. The "Low" speed is the position immediately past the "Off" detent and the High position is at the extreme position of the switch travel. **In the test chart the reference "Ground" means to attach one lead of the continuity tester or ohmmeter to the switch case.**

MOTOR TESTING

(Valiant, Barracuda, Belvedere and Satellite) Two Speed (Fig. 4)

(1) Disconnect motor leads at motor. Connect jumper from battery positive terminal to motor terminal "H". Motor should run at high speed. (The

SWITCH CONTINUITY CHART

Chrysler Manufactured Two Speed (Fury and V.I.P.)

Off	Low	High
B to B/U B to P	B to B/U	B to B/U
A to Ground	B to A F2 to Ground	B to H F2 to Ground
F2-Open	P-Open	P-Open
H-Open	H-Open	A-Open

SWITCH CONTINUITY CHART

(Vendor Manufactured Variable and Three Speed)

Off	Low	Medium (3 Speed Only)	High
B to B/U. B/U to P. A to F2.	B to B/U. B/U to A. A to F1.	B to B/U. B/U to A. F1 to R1.	B to B/U. B/U to A. F1 to R2. *A through the rheostat or resistor to F1.
F1 to Ground.	F2 to Ground. P-open.	F2 to Ground. P-open.	F2 to ground. P-open.

*As the switch knob of the variable speed switch is rotated the resistance shown on the ohmmeter should vary from a high reading to a low reading in a smooth rate of change.

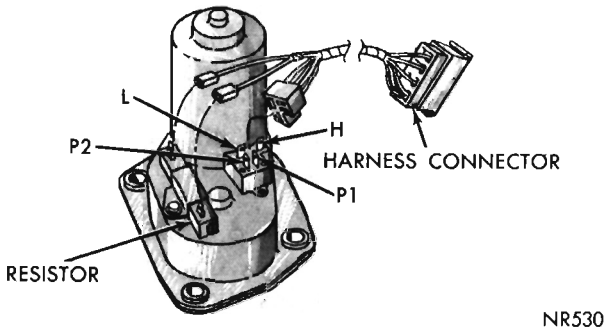

Fig. 4—Two Speed Motor—Chrysler Built

ground circuit is completed through the car body). Remove jumper.

(2) Connect jumper from battery positive terminal to resistor terminal. Connect second jumper from terminal "L" to the second resistor terminal. The motor should run at low speed. Remove jumpers.

(3) Connect jumper from battery positive terminal to motor terminal "P1". Connect a second jumper from motor terminal "P2" to terminal "L". The motor should park. (If the wiper blades are near the bottom of the glass, the motor may be parked. Run the motor as in step (2) until the blades are high on the glass. Then repeat step (3) to observe parking.)

Fury and V.I.P.

(1) Disconnect motor leads at motor. Connect jumper from battery positive terminal to motor (terminal "H"). Connect second jumper from (terminal "P2") to ground. Motor should run at high speed. Remove jumpers.

(2) Connect jumper from battery positive terminal to resistor terminal. Connect second jumper from (terminal "L") to the second resistor terminal. Connect a third jumper from (terminal "P2") to ground. The motor should run forward at low speed. Remove jumpers.

(3) Connect jumper from battery positive terminal to motor (terminal "P1"). Connect a second jumper from motor (terminal "L") to ground. The motor should run in reverse rotation for at least a half revolution and park.

Vender Manufactured, Variable Speed and Three Speed

(1) Disconnect motor leads at bulkhead disconnect. Connect a jumper from the green lead to ground. Connect a second jumper wire from the battery positive terminal to brown and red leads in bulkhead disconnect. (The ground circuit is completed through the car body). The motor should run continuously. Disconnect leads.

(2) Connect jumper wire from green lead to brown lead. Connect red lead to ground. Connect third jumper wire from battery positive terminal to blue lead. The wiper should run to the park position.

CAUTION: Motor can be damaged if not wired correctly.

MOTOR REMOVAL

(Valiant, Barracuda, Belvedere and Satellite)

(1) Disconnect the battery ground cable.

(2) Disconnect the wiper motor wiring harness.

(3) Remove the three wiper motor mounting nuts. (On vehicles without air conditioning it is easier to remove crank arm nut and crank arm from under instrument panel) first and omit steps (4) and (5).

(4) Work motor off mounting studs far enough to gain access to crank arm mounting nut. **Caution: Do not force or pry motor from mounting studs, as drive link can be easily distorted.**

(5) Using a 1/2 inch open end wrench, remove motor crank arm nut. Carefully pry arm off shaft.

(6) Remove wiper motor.

MOTOR INSTALLATION

(Valiant, Barracuda, Belvedere and Satellite)

Before installing motor, be sure all three spacers are inserted in holes of motor grommets.

(1) Balance wiper motor on upper right motor grommet.

(2) Index flats on motor shaft to mate with flats on crank arm. Start and tighten crank arm nut on shaft, being careful that crank arm remains indexed and fully seated on shaft. (On vehicles without air conditioning, it is easier to do step (3) before doing step (2) from under instrument panel.)

(3) Position wiper motor, then install and tighten the three mounting nuts, being sure that ground strap is attached securely.

(4) Connect wiper motor harness.

(5) Connect battery ground cable and test operation of windshield wiper system.

MOTOR REMOVAL

(Fury and V.I.P.)

(1) Disconnect battery ground cable.

(2) Using a .090 inch diameter pin or drill, remove wiper arm and blade assemblies (Fig. 1).

(3) Remove windshield lower moulding.

(4) Remove cowl screen.

(5) Remove drive crank arm retaining nut and drive crank. Disconnect wiring to motor.

(6) Remove three wiper motor mounting nuts and remove motor.

MOTOR INSTALLATION

(Fury and V.I.P.)

(1) Position motor on the three studs on dash

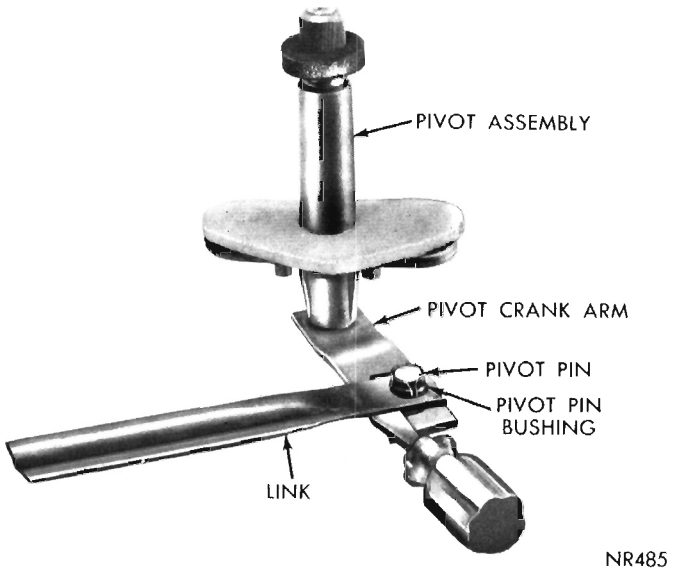

Fig. 5—Removing Link and Bushing (Except Fury and V.I.P.)

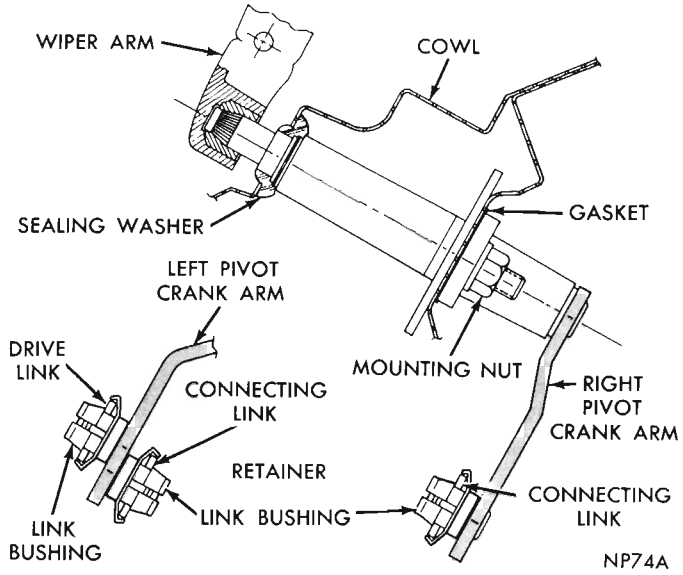

Fig. 6—Pivot Arm and Link Assemblies (Except Fury and V.I.P.)

panel. Make certain rubber gasket and spacers between motor and dash panel, are properly positioned.

(2) Install the three nuts that mount motor to dash panel and connect wiring to motor. Make sure ground strap is installed under one nut.

(3) Position drive crank on motor and install nut. Tighten to 140 inch-pounds.

(4) Connect battery ground cable and test operation of wiper motor.

(5) Install cowl screen.

(6) Install windshield lower moulding.

(7) Using Tool C-3982, install and adjust wiper arm and blade assemblies. (See Wiper Arm Adjustment).

LINKS

Removal—(All except Fury and V.I.P.)

(1) Disconnect battery ground cable.

(2) If air conditioning equipped, remove the duct supplying left spot cooler to provide easier access to the left wiper pivot.

Insert a wide blade screwdriver between plastic link bushing and the pivot crank arm. Gently twist the screwdriver to force the bushing and link from the pivot pin (See Fig. 5). Remove three motor mounting nuts, pull motor away from bulkhead and remove motor crank arm retaining nut. After crank arm is removed from motor shaft, remove drive link assembly from under left side of panel.

In heater equipped models, remove motor drive crank arm retaining nut and pry crank arm off of motor shaft. Gently pry drive link and bushing from left pivot crank arm pin and withdraw assembly from under panel. Remove motor drive crank arm from drive link after removal of assembly from vehicle (Fig. 7).

(3) To remove connecting link from pivots, remove glove box. Reaching through glove box opening, gently pry the bushing and link from the right pivot pin. (See Fig. 6). Lift the link from the pivot crank arm pin and repeat operation at left pivot (Fig. 6). Withdraw from under left side of panel.

Lubrication

The crank arm pin and the pivot pins for all systems should be lubricated with Automotive Multipurpose Lubricant NLGI2.

Installation

(1) Install bushing on motor crank arm pin, position drive link on bushing so large side of **pivot bushing** faces away from drive crank arm. Large side of pivot bushing will be on same side of link as crank arm retainer.

(2) Install spring washer, convex side towards link and install retainer (Fig. 7).

If retainer was distorted in removal, it should be replaced.

(3) In heater equipped vehicles, insert drive link assembly under left side of instrument panel, position crank arm on motor shaft indexing flats on motor shaft with flats of crank arm and install crank arm retaining nut.

In Belvedere and Satellite models equipped with air conditioning, install drive link from under instrument panel. Install motor crank arm on motor shaft from engine compartment side of bulkhead. Position motor on studs and secure with three nuts. Place plastic bushing at end of drive link over proper pin on left pivot (See Fig. 6) and press into position. Be certain

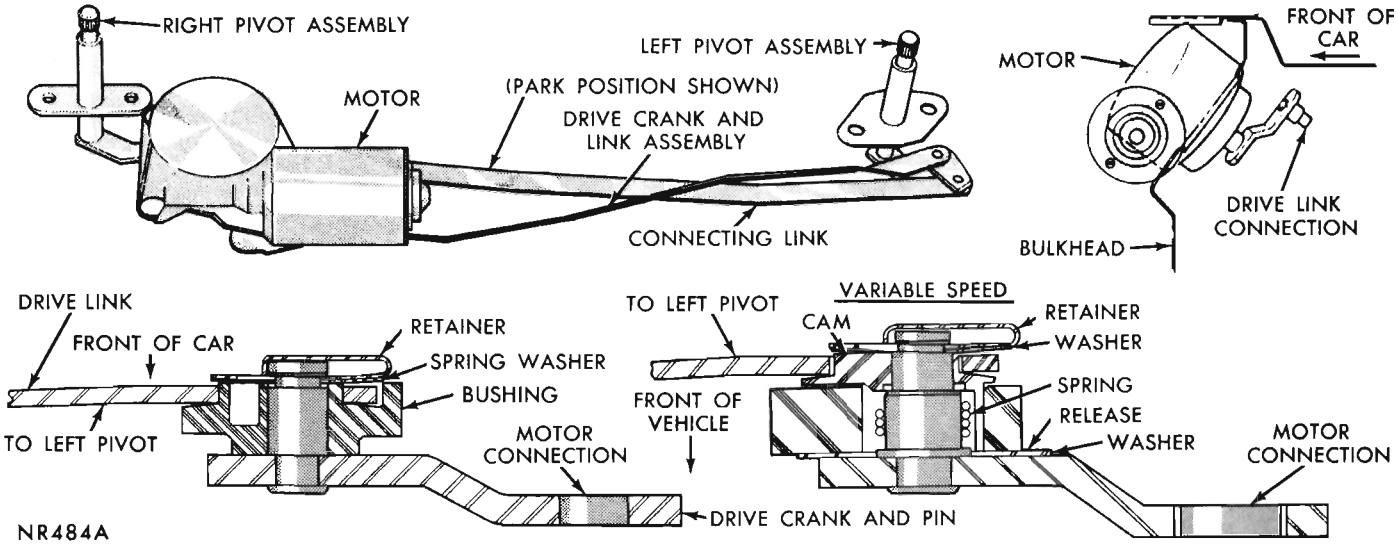

Fig. 7—Wiper System (Except Fury and V.I.P.)

that the plastic bushing is fully seated to assure locking action in the groove on the pivot pin.

(4) Insert connecting link into place with "R" (right side) and "L" (left side) stamped in link facing instrument panel side. Press each link bushing fully into place on the pivot crank pins.

(5) Reconnect battery cable and test the operation of the wiper system. Reinstall glove box if necessary.

LINKAGE REMOVAL

(Fury and V.I.P.)

To service either the drive link or the connecting link it is necessary to remove the wiper arm and blade assemblies, the windshield lower moulding and the cowl screen to provide access to the wiper system.

(1) Disconnect battery ground cable.

(2) Remove the crank arm nut and crank arm from motor shaft.

(3) Remove retainer clip and link from pivot crank pin on right pivot.

(4) Remove bolts mounting left pivot to body (Fig. 9).

(5) Remove links and left pivot through cowl top opening. The linkage can be serviced on bench after links are removed from the vehicle. (Refer to Figure 8).

WIPER SYSTEM LUBRICATION

Should it be necessary to service the wiper system for any reasons, the parking spring in the two speed parking mechanism should be lubricated with Mopar Lubricant provided with service package. Apply the lubricant to inside coils of spring first and to the outside of the spring coils after installation of the spring.

The three speed crank arm pin and the pivot pins for all systems should be lubricated with Automotive Multi-Purpose Lubricant NLGI2.

Installation

If servicing of the mechanism on the 3-speed motor crank is required, be certain that during reassembly, the link is positioned between the ears of the cover retainer.

Seat the rubber cover fully in the groove provided for it on the cover retainer.

Any retainer clips distorted during removal should be replaced.

(1) Insert the linkage and left pivot, assembled as a unit, through the cowl panel opening. Install spring washer on right pivot pin, lubricate pin and position right end bushing of connecting link on pivot pin, then fully seat retaining clip on pivot pin.

(2) Install left pivot.

(3) Position crank arm on motor shaft and tighten mounting nut to 140 inch-pounds. Reconnect battery ground cable and test wiper system for operation and parking action.

(4) Install cowl screen and windshield lower moulding.

(5) Using a .090 inch diameter pin or drill, install and adjust wiper arm and blade assemblies.

PIVOT REPLACEMENT

(All Except Fury and V.I.P.)

(1) Remove battery ground cable.

(2) Using Tool C-3982, remove wiper arm assembly (Fig. 2).

(3) From under instrument panel, remove two retaining nuts from pivot mounting studs and lower

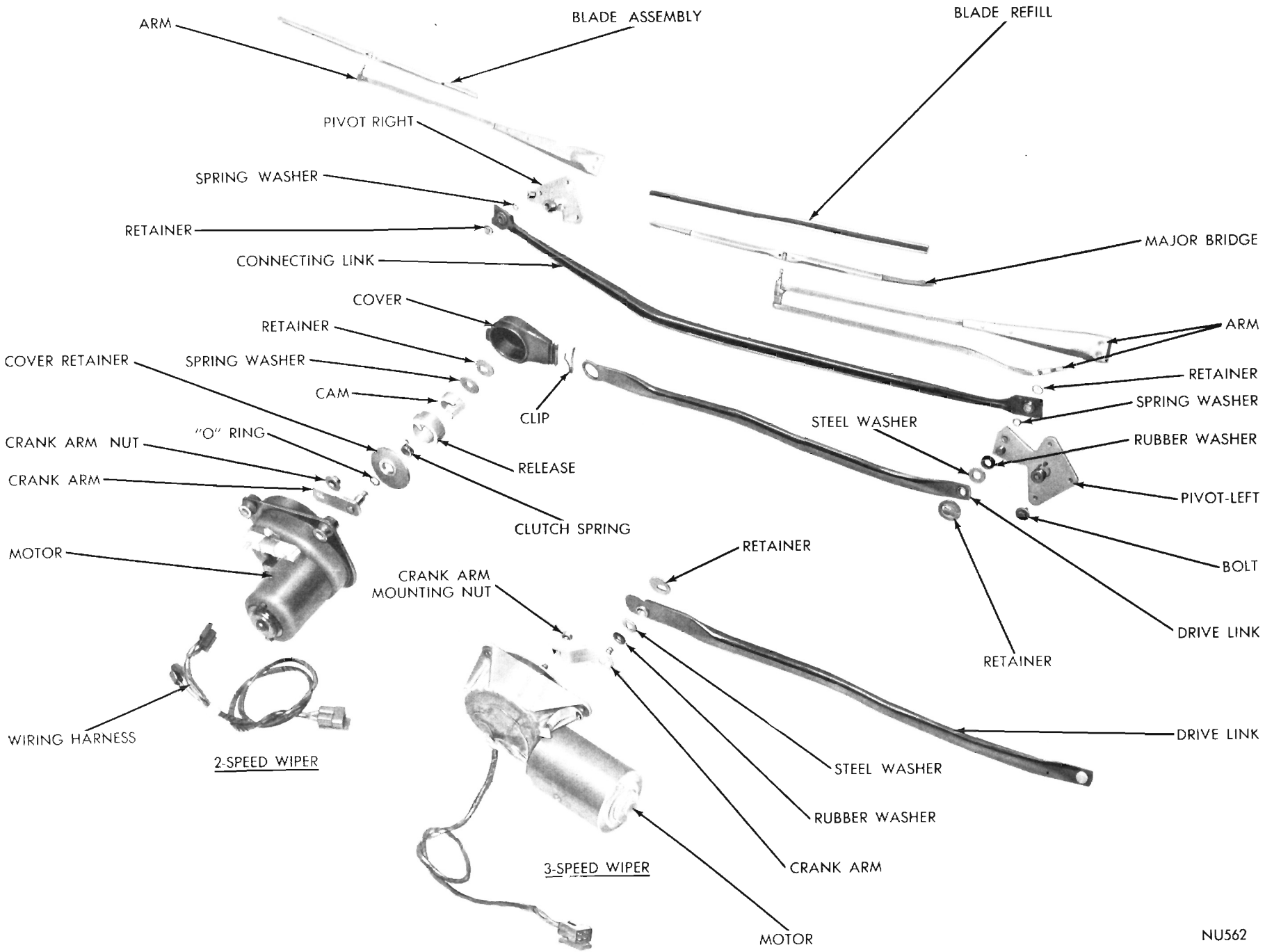

Fig. 8—Wiper System (Fury and V.I.P.)

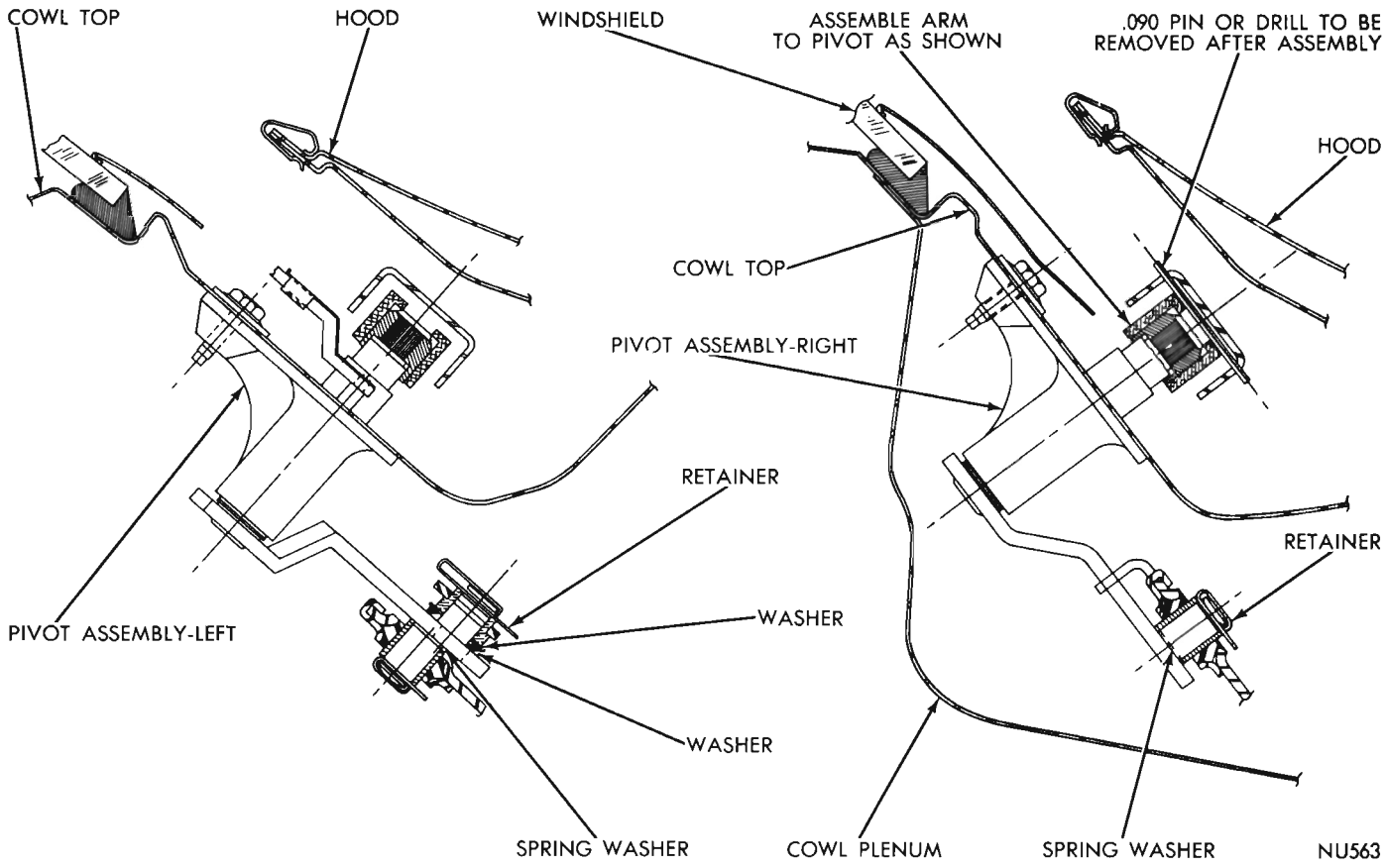

Fig. 9—Pivot Arm and Link Assemblies (Fury and V.I.P.)

pivot far enough to remove connecting link (and drive link on left pivot) from pivot crank arm pin (See Fig. 6). If air conditioning equipped, it is necessary to remove glove box for access to right connecting link and pivot retaining nuts. Remove pivot assemblies.

(4) Install replacement pivot assembly, with new gasket, loosely on the mounting studs.

(5) Lubricate pivot pins and snap link bushings fully into position on pivot pins.

(6) Tighten pivot mounting nuts.

(7) Reconnect battery ground cable and test wiper system for operation and parking action.

(8) Replace glove box if required and using Tool C-3982, install and adjust the wiper arm and blade assemblies. (See Wiper Arm Adjustment).

(Fury and V.I.P.)

To service either of the wiper pivots it is necessary to remove the wiper arm and blade assemblies, the windshield lower moulding and the cowl screen.

The right pivot is serviced after disconnecting the connecting link at the pivot and removing the bolts that mount the pivot to the body (Fig. 9).

The left pivot is serviced after disconnecting the connecting link at the right pivot, disconnecting the drive crank at the motor, removing the bolts that mount the left pivot to the body and removing the links and left pivot as an assembly through the cowl top opening.

Remove linkage from pivot or pivots to be replaced by prying off the retainer clips. **Any retainer clip that becomes bent or distorted during removal should be replaced.**

When installing connecting link on pivot pins, place spring washer on pin and lubricate pin.

Install connecting link and retaining clip.

Place foam rubber washer and flat metal washer on drive pin of left pivot. Lubricate pin and install drive link and retainer clip.

Insert as an assembly through cowl top opening. Bolt pivots in position.

Position motor crank arm on motor shaft and tighten mounting nut to 140 inch pounds. Connect battery cable.

Test wiper system operation and replace cowl screen and windshield lower moulding.

Using a .090 diameter pin or drill, install and adjust wiper arm and blade assemblies. (See Wiper Arm Adjustment).

WINDSHIELD WASHERS

GENERAL INFORMATION

Valiant and Barracuda models are equipped with a foot operated pump as standard equipment or electric washers as part of an option. Belvedere, Satellite, Fury and V.I.P. models are equipped with push button electric washers as standard equipment.

Foot pump equipped models have a unique reservoir mounted in the engine compartment. Check valves are built into the rear of the foot pump to control the direction of fluid flow from the reservoir to the pump and from the pump to the nozzles.

Electric pump equipped models have the electric pump assembly mounted directly to the reservoir. A permanently lubricated sealed motor is coupled to a rotor type pump. Fluid, gravity fed from the reservoir, is forced by the pump through rubber hoses to the nozzles which direct the streams to the windshields.

The pump and reservoir in either system are serviced as separate assemblies.

SERVICE DIAGNOSIS

FOOT PUMP

Condition	Possible Cause	Correction
HIGH OPERATING EFFORT	(a) Low aimed nozzles.	(a) Adjust nozzles.
	(b) Pinched hoses.	(b) Correct as necessary.
LOW OUTPUT	(a) Low aimed nozzles.	(a) Adjust nozzles.
	(b) Leaky hoses.	(b) Correct as necessary.
	(c) Defective pump.	(c) Replace pump.

SERVICE DIAGNOSIS

As an aid to determine if the pump assembly is defective, connect a jumper wire from the blade terminal of the pump (Fig. 4), to the positive terminal of the battery. If pump operates, check wiring and switch. If pump does not operate, it may be defective or frozen. Replace the pump and motor assembly if defective.

ELECTRIC PUMP

Condition	Possible Cause	Correction
INTERMITTENT OPERATION OF SYSTEM	(a) Loose wiring connections.	(a) Repair as necessary.
	(b) Faulty switch.	(b) Replace switch.
	(c) Faulty motor.	(c) Replace motor and pump assembly.
MOTOR RUNS DOES NOT PUMP FLUID	(a) Nozzle jets plugged.	(a) Clean nozzle jets.
	(b) Broken or loose hose.	(b) Replace hose.
	(c) Faulty pump.	(c) Replace motor and pump assembly.
	(d) Nozzle jet under air intake grille.	(d) Adjust nozzles.
PUMP ASSEMBLY INOPERATIVE	(a) Poor ground.	(a) Clean ground wire terminal and tighten mounting screw.
	(b) Loose wiring terminals.	(b) Tighten terminals.
	(c) Corroded terminals.	(c) Clean and tighten terminals.
	(d) Broken wires.	(d) Repair or replace the wires.
	(e) Faulty switch.	(e) Replace switch assembly.
	(f) Faulty motor.	(f) Replace motor and pump assembly.
LOW OUTPUT	(a) Low aimed nozzles.	(a) Adjust nozzles.
	(b) Poor electrical connections.	(b) Clean and tighten terminals.
	(c) Pinched or leaky hoses.	(c) Correct as necessary.
	(d) Defective motor.	(d) Replace motor and pump assembly.

SERVICE PROCEDURES

Nozzle Adjustment (Valiant, Barracuda and Belvedere)

To compensate for lateral adjustment, loosen the mounting screws and move the nozzle and bracket assembly until the nozzle is centered between the grille louvers. Vertical nozzle adjustment is made

by bending the tab of the nozzle mounting bracket up or down.

Foot pump models may be aimed higher for improved water distribution.

Adjust nozzles so that the centers of the streams contact the windshield glass as shown in Figures 1, 2 and 3. The oval pattern formed by the streams striking the windshield glass is not "centered" on the center of the stream. The stream is toward the bottom of the oval pattern.

(Fury and V.I.P.)

The nozzles are mounted on the underside of the hood. Vertical and lateral adjustments is obtained by bending the nozzle tube with the finger. **Caution: To prevent possible injury, do not adjust the nozzles while the wipers are operating.**

Motor and Pump Assembly

Removal

(1) Disconnect motor feed wire connector and rubber hose from bottom of pump.

(2) Remove reservoir mounting screws, remove reservoir and pump assembly. Empty fluid from reservoir.

(3) Using a suitable extension and a 7/8 inch deep-well socket through filler neck, remove pump mounting nut inside reservoir.

It may be necessary in some older pumps to use a 15/16 in. deep-well socket due to the expansion of the nylon nut through absorption of windshield washer fluid.

(4) Remove pump from bottom of reservoir and discard rubber gasket.

Installation

Any time the pump is removed from the reservoir, always replace the rubber gasket.

(1) Install new rubber gasket on reservoir.

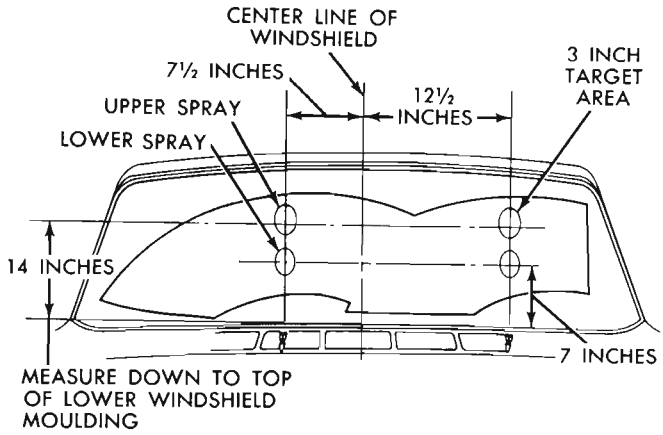

Fig. 1—Washer Aiming Diagram (Valiant and Barracuda)

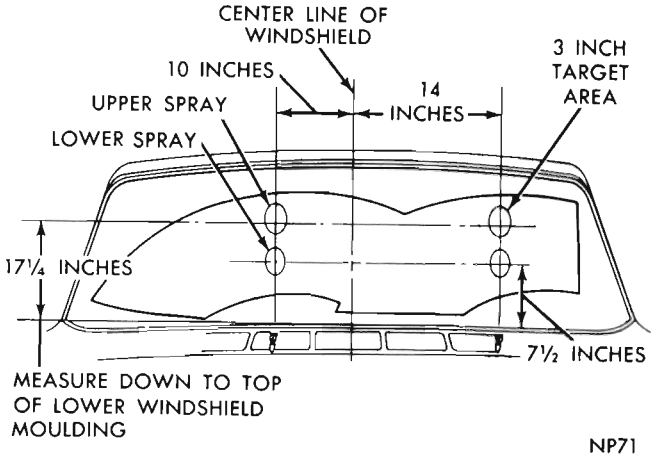

Fig. 2—Washer Aiming Diagram (Belvedere and Satellite)

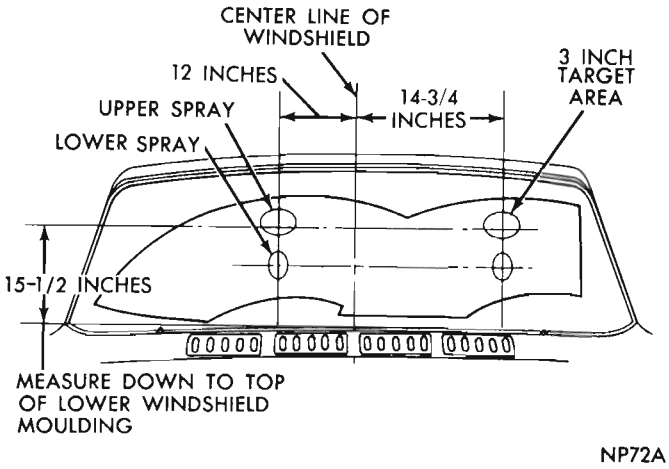

Fig. 3—Washer Aiming Diagram (Fury and V.I.P.)

(2) Install pump assembly through gasket. Place plastic washer under screen and nut assembly and tighten securely. **Do not overtighten.**

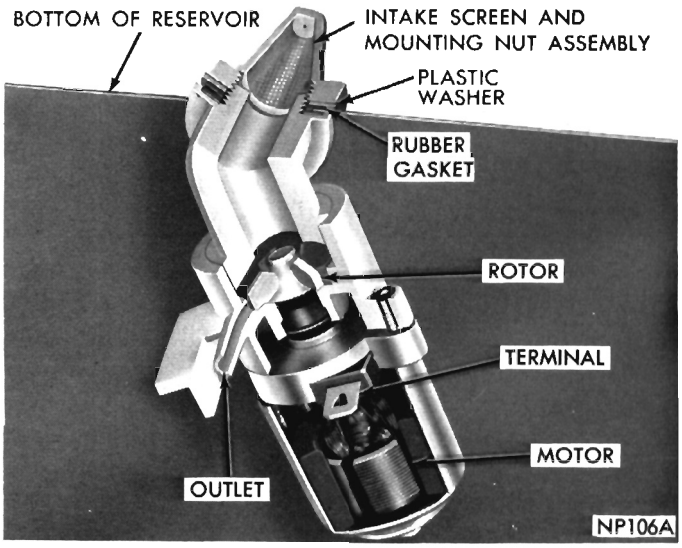

Fig. 4—Reservoir and Pump Assembly

(3) Install pump and reservoir in vehicle with mounting screws **making sure motor ground wire is installed under one of the mounting screws.**

(4) Connect motor feed wire connector and rubber hose to pump. Fill reservoir, inspect for leaks and test operation of washer system, making sure the nozzles are adjusted properly.

FOOT PUMP

Removal

CAUTION: Before removing foot pump, clamp the hose at the reservoir to prevent the siphoning of washer fluid into the passenger compartment.

(1) Remove the two screws which mount the pump to the floor pan.

(2) Disconnect hoses.

Installation

(1) Attach the hoses first.

(2) Mount pump assembly and install mounting screws.

(3) Tighten the mounting screws securely.

(4) Remove the clamp from the hose at the reservoir.

(5) Check for leaks and test the operation of the system, making sure the nozzles are aimed properly.

ELECTRIC DOOR LOCK SYSTEM

All doors may be locked or unlocked electrically. To lock mechanically, depress front and rear door locking buttons. To lock electrically, depress either of the front door locking buttons.

Adjustment—(Fig. 1)

(1) Loosen solenoid to mounting screws and slide solenoid to full down position.

(2) Extend solenoid rod until latch is in locked position.

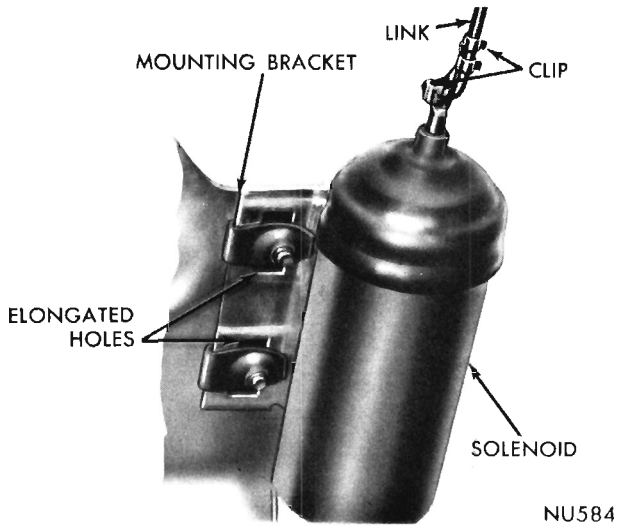

Fig. 1—Solenoid Adjustment

(3) Tighten solenoid to mounting screws and test operation of lock.

ELECTRICAL TESTS

The battery must be fully charged before testing. Make certain solenoids are correctly adjusted before circuits are tested. The circuit breaker is located behind the left side cowl trim panel. The relay is located behind the right side cowl trim panel.

Connect positive lead of voltmeter to buss bar between the two relays and negative lead of voltmeter to a good ground (Fig. 2). With no load, voltage should be 12.6 volts and 9.4 volts when locks are activated. If no reading is obtained at relay, the circuit breaker should be tested next. See "Wiring Diagrams" for appropriate schematic wiring diagram.

Connect voltmeter positive lead to light green terminal of circuit breaker and other lead to a good ground. If a reading of 12.4 volts is not obtained, inspect for a broken wire or loose connection at ammeter. Replace circuit breaker only if continuity of imput wire has been established.

To determine which solenoid is faulty, check each individual door for electrical lock and unlock or disconnect the solenoid connectors one at a time, while operating the door lock switch. When faulty solenoid is disconnected, the remaining door lock will operate. If necessary to replace solenoid, refer to Group 23 "Body and Frame".

WINDOW REGULATORS

Electrical Tests

Electric window lift motors are the permanent magnet type. The motors are grounded through the master switch by a black wire attached to the left cowl panel (Fig. 1).

Circuit Breaker Test

Connect one lead of a test light to output terminal

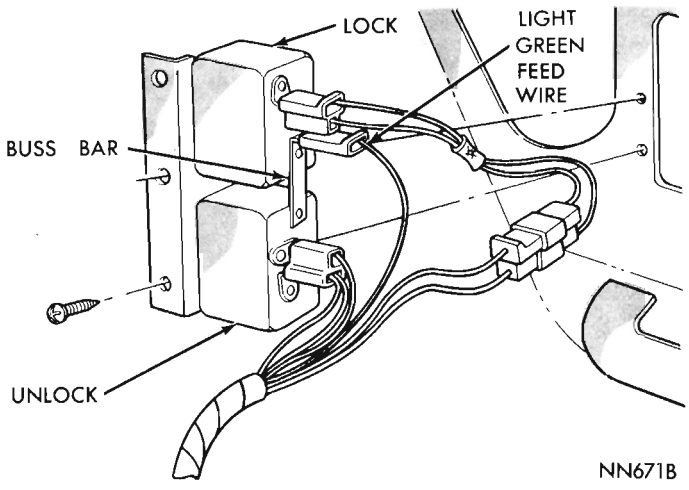

Fig. 2—Door Lock Relay

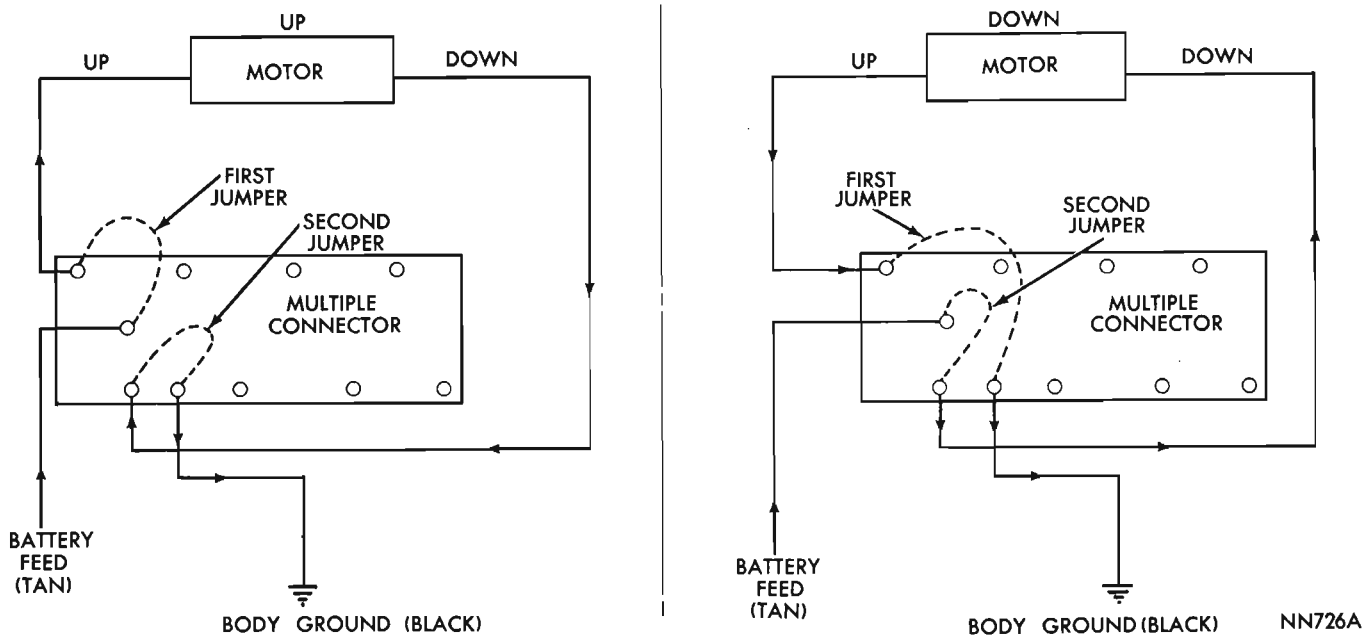

Fig. 1—Testing Electrical Switch

of circuit breaker and other lead to a good ground. The test bulb should light, if not and wire continuity has been established, replace the circuit breaker.

Window Lift Switch

Remove switch from trim panel for testing purposes. Slide a thin blade behind the switch housing (front and back) to depress retaining clips and pull switch out from panel. Carefully separate multiple terminal block from switch body. Connect one lead of a test light to black wire terminal and touch other lead to tan wire terminal. The test bulb should light, if not, test wires for an open circuit. Use two jumper wires to test continuity of circuits. Connect one jumper to the tan lead and the other end to the **Up** or **Down** terminal (opposite of glass position). Connect the other jumper to a good ground and to the opposite terminal (Fig. 1).

If motor runs, install switch body on multiple connector and activate switch. Should motor fail to run, replace switch body. Each switch is tested in same manner.

The motor should run, if not, test continuity of wiring. Should continuity be established and motor still does not run, replace motor.

Motor Bench Test

Connect a jumper from positive terminal of a test battery to one of the motor leads. Connect another jumper from the test battery negative terminal to the other motor lead and the motor should run. To reverse direction of motor rotation, switch leads of jumper wires at test battery terminals.

MOTOR LUBRICATION

With motor removed from regulator. Remove seal (Fig. 2) from the motor gearbox housing. Apply a liberal amount of the lubricant in the gearbox housing to the entire inside diameter of seal marked "A" and the outside diameter of the gear and pinion assembly marked "B" where the seal contacts the rubber coupling.

If there is no lubricant in the gear box, fill to top of gear with Mopar 2525035 Multi-Mileage Lubricant or Mopar 1064768 Lubri-plate.

TAIL GATE ELECTRICAL TESTS

A tail gate glass may not move due to a binding condition between the glass and run channels. Correct the binding condition before making electrical tests.

CONTROL SWITCH

Disconnect black wire at control switch and hold firmly against yellow wire terminal on control switch. The glass (if raised) should lower. Repeat test with

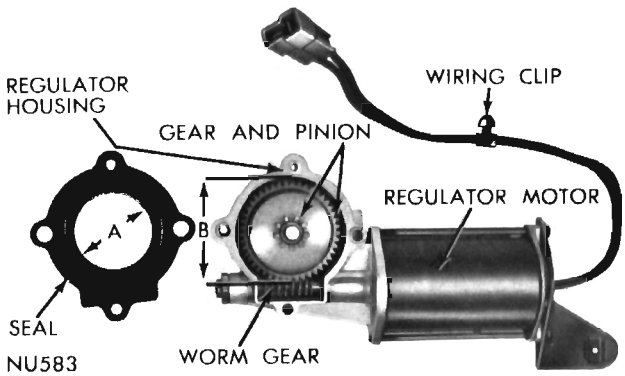

Fig. 2—Window Lift Motor Lubrication

brown wire. The glass (in lowered position) should rise. If glass operates during tests, but fails to operate when the control switch lever is moved, the switch is at fault. If glass fails to move during these tests, perform the wire harness tests.

WIRE HARNESS AND REGULATOR MOTOR

Disconnect wire harness connector at motor. Connect one wire of a test light to brown wire and the other to a good body ground. Position instrument panel switch in the "UP" position. The bulb should light. Repeat test with the yellow wire, but position switch in the "DOWN" position. If bulb fails to light either time, and all wire terminals are tight, replace the circuit breaker. See "Wiring Diagrams" for appropriate schematic wiring diagram.

Should bulb light on one wire but not the other, inspect harness for a broken wire. If bulb lights in both tests, place one wire of test light to black wire terminal on motor and other wire to a good body ground. Position switch in either "UP" or "DOWN" position. If bulb lights, inspect for a bad ground connection or broken black wire. If test bulb does not light and the wire harness continuity has been established, replace the motor. See "Group 23" for replacement and adjustments of tail gate components.

TOP LIFT (CONVERTIBLE)

Electrical Tests

Control Switch

Refer to Figure 1 and appropriate wiring diagram (See "Wiring Diagrams") and disconnect red wire at switch. Hold firmly against yellow wire terminal on switch. The top (if raised) should start to lower. Repeat test with the brown wire. The top (in lowered position) should start to rise. If top operates during these tests, but fails to operate when the control switch lever is moved to "UP" or "DOWN" position, the switch is at fault and should be replaced. If the top fails to operate during these tests, inspect and test wires between switch and motor.

Circuit Breaker

Disconnect the wire harness connector at the motor

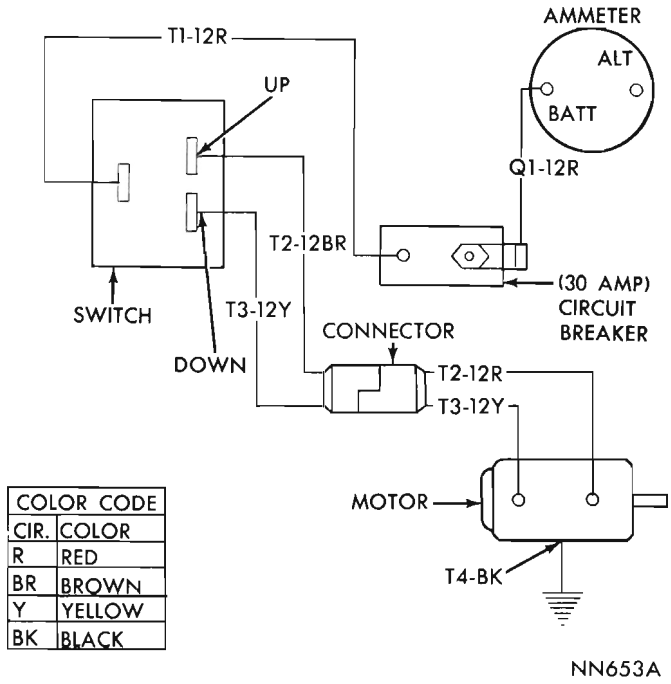

Fig. 1—Wiring Circuit

and connect one wire of test light to brown wire and the other to a good body ground. Position the instrument panel switch in the "UP" position. The bulb should light. Repeat this test with the yellow wire but position the switch in the "DOWN" position. If the bulb fails to light either time and wire continuity has been established, replace the circuit breaker.

Pump Motor

Should the test bulb light on one wire but not the other, inspect wire harness for a broken wire. If the bulb lights in both tests, place one wire of the test light to the black wire terminal (ground) on the motor and the other wire to a good body ground. Position the switch in either "UP" or "DOWN" position. If bulb should light inspect for a poor ground connection or broken black wire. If the bulb does not light and wire harness continuity has been established, test black wire with a needle type connector as close to motor as possible without touching motor. If bulb fails to light, replace motor. (Refer to Group 23, "Body and Frame").

POWER SEATS

INDEX

	Page
GENERAL INFORMATION	96
SERVICE PROCEDURES	96
Adjuster	97
Installation	97
Removal	97
Cable and Housing	97
Installation	98
Removal	97
Electrical Tests	96
Horizontal and Vertical Transmissions	98
Installation	98
Removal	98

	Page
Motor	97
Installation	97
Removal	97
Seat Assembly and Adjuster	97
Installation	97
Removal	97
WIRING DIAGRAMS	113

GENERAL INFORMATION

This power seat can be adjusted in six different directions - up, down, forward, back, tilt forward, or tilt rearward.

The control switch is located on the lower outboard side of the seat. The front lever on the switch (Fig. 1) raises or lowers (tilts) the front of the seat, the center lever raises or lowers the complete seat, and also moves it forward or backward, the rear lever raises or lowers (tilts) the back of the seat.

A three armature permanent magnet reversible motor is coupled through cables to rack and pinion assemblies located in the seat tracks, providing the various seat movements.

The electrical circuit is protected by a 30 amp circuit breaker located on the fuse block on the inside of the cowl panel to the left of the steering column.

SERVICE PROCEDURES

ELECTRICAL TESTS

Before any testing is attempted the battery should be fully charged and all connections and terminals cleaned and tightened to insure proper continuity and grounds. With everything connected and the dome light on, apply switch in direction of failure, if dome light dims the seat motion is trying to work indicating mechanical jamming. If dome light does not dim then proceed with the following electrical tests.

(1) Disconnect wire from instrument panel feed at fuse block side cowl circuit breaker.

(2) Connect test lamp C-744 in series between instrument panel feed and good ground. If test lamp lights feed-in wiring is good.

(3) Remove test lamp and connect feed to circuit breaker.

(4) Disconnect wiring from other side of circuit breaker. Connect test lamp C-744 in series between circuit breaker and good ground, if test lamp lights circuit breaker is good.

(5) Remove test lamp and connect wiring harness.

(6) Disconnect wiring harness at connector under seat. Connect test lamp C-744 between red (R) and black (BK) wire in female connector on harness, if test lamp lights harness to seat is good.

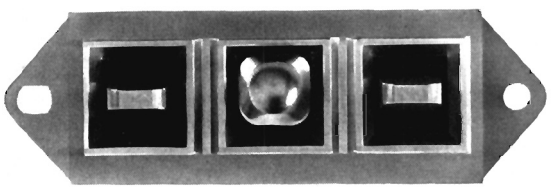

NU523

Fig. 1—Switch Assembly

(7) Remove test lamp and connect harness.

(8) Remove switch from seat harness.

(9) To check front motor connect a covered jumper wire between the red (R) terminal in the center section (Fig. 2) either the red with dark green (R-DGN) tracer, or yellow with dark green (Y-DGN) tracer connection in the front section. Connect a second covered jumper wire between the black (BK) terminal in the center section and the open connection in the front section, if motor does not operate, reverse the jumpers in the front section. If motor still does not operate, either the harness or complete three motor assembly should be replaced.

(10) To check center motor connect a covered jumper wire between the red (R) terminal of the center section (Fig. 2) and either the red with white tracer (R-W) tracer, or yellow with white (Y-W) tracer connection in the center section. Connect a second covered jumper wire between the black (BK) terminal in the center section and the open connection in the center section, if motor does not operate, reverse the jumpers (R-W) and (Y-W). If motor still does not operate, either the harness or complete three motor assembly should be replaced.

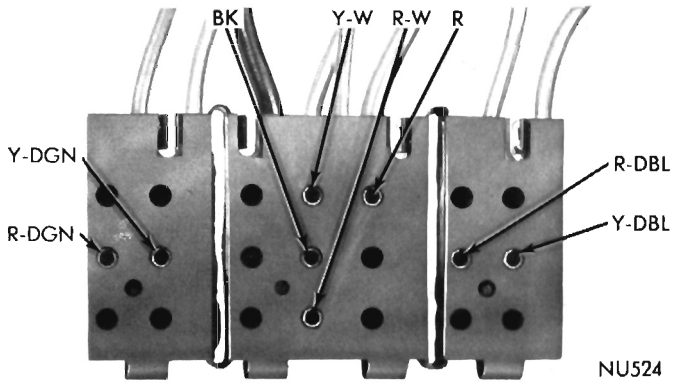

NU524

Fig. 2—Electrical Test Area Identification

(11) To check rear motor connect a covered jumper wire between the red (R) terminal in the center section (Fig. 2) and either the red with dark blue (R-DBL) tracer, or yellow with dark blue (Y-DBL) tracer connection in the rear section. Connect a second covered jumper wire between the black (BK) terminal in the center section and the open connection in the rear section, if motor does not operate, reverse the jumpers in the rear section. If motor still does not operate, either the harness or complete three motor assembly should be replaced.

(12) If all motors and the seat operate properly this indicates that the switch is bad and should be replaced. For additional wiring diagrams see "Wiring Diagram" section at end of this group.

SEAT ASSEMBLY AND ADJUSTER

Removal

(1) Disconnect battery ground cable.
(2) From underneath vehicle remove mounting nuts holding seat assembly to floor pan.
(3) Tilt seat and disconnect wiring harness.
(4) Remove assembly from vehicle.

Installation

(1) Position seat assembly in vehicle.
(2) Connect wiring harness.
(3) From underneath vehicle install and tighten mounting nuts.
(4) Connect battery ground cable and check seat operation.

ADJUSTER

Removal

(1) Remove seat assembly from vehicle following procedure outlined under, "Seat Assembly and Adjuster."
(2) Lay seat on its back on some clean object.
(3) Remove bolts attaching adjuster to seat assembly.

Installation

(1) Lay seat on its back on some clean object.
(2) Position adjuster to seat assembly and install attaching bolts.
(3) Install seat assembly following procedure outlined under "Seat Assembly and Adjuster."

MOTOR

Removal

CAUTION: Anytime the motor, cable and housing assemblies or vertical and horizontal transmission assemblies require maintenance, the assemblies must be synchronized to insure easy and proper operation.

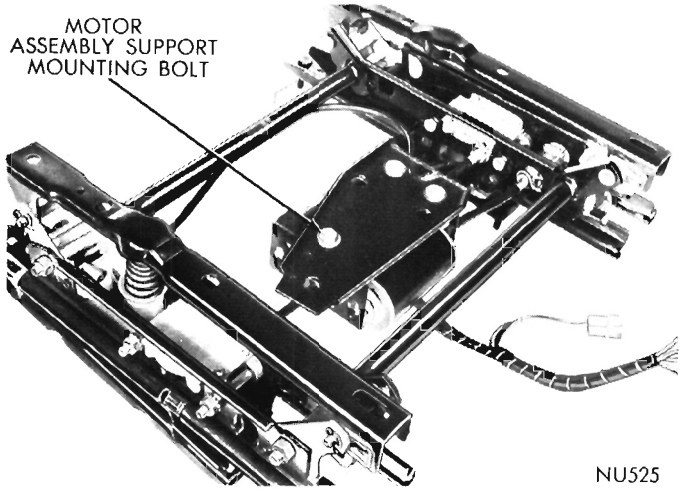

Fig. 3—Mounting Bolt Location

(1) Remove seat assembly from vehicle following procedure outlined under "Seat Assembly and Adjuster."
(2) Lay seat assembly on its back on some clean object.
(3) Remove bolt which holds motor to support (Fig. 3). Then remove mounting (Fig. 4) screws.
(4) Carefully disconnect housings and cables from motor assembly.

Installation

(1) Place motor assembly into position.
(2) Carefully connect cables and housings to motor assembly.
(3) Install mounting screws.
(4) Install bolt holding motor assembly to adjuster.
(5) Install seat assembly following procedure outlined under, "Seat Assembly and Adjuster."

CABLE AND HOUSING

Removal

CAUTION: Anytime the motor, cable and housing assemblies or vertical and horizontal transmission

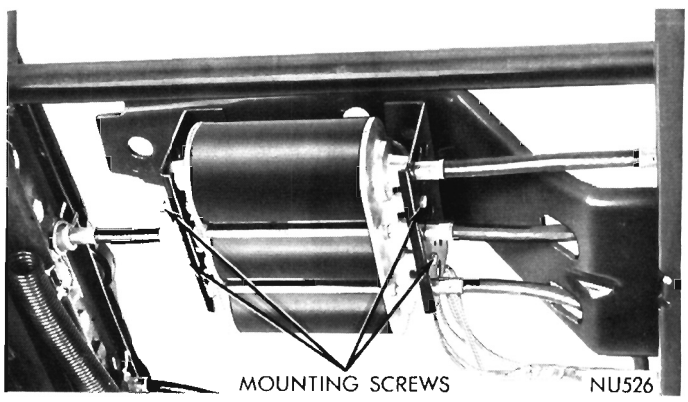

Fig. 4—Motor Mounting Screw Location

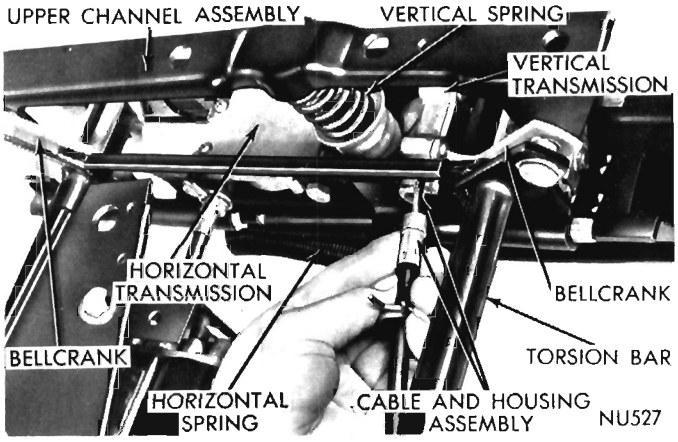

Fig. 5—Removing or Installing Cable and Housing

assemblies require maintenance, the assemblies must be synchronized to insure easy and proper operation.

It is recommended that anytime a cable is to be replaced that the motor assembly be removed also for ease of replacement.

(1) After motor has been disconnected. Remove corbin clamp from cable housing then slide cable and housing out of connector (Fig. 5).

Installation

(1) Insert cable and housing into connector and install corbin clamp.

(2) Install motor assembly.

HORIZONTAL AND VERTICAL TRANSMISSIONS

Removal

CAUTION: Anytime the motor, cable and housing assemblies or vertical and horizontal transmission assemblies require maintenance, the assemblies must be synchronized to insure easy and proper operation.

(1) Remove seat assembly from vehicle following procedure outlined under, "Seat Assembly and Adjuster."

(2) Remove motor assembly following procedure outlined under, "Motor."

(3) Fasten a 10 inch "C" clamp from the mounting base assembly to the upper channel assembly just tight enough to keep it in place while removing cotter key and the front (5/16″) clevis pin.

(4) After clevis pin is removed slowly release the tension on the vertical spring.

(5) Remove cotter key and rear (3/8″) clevis pin and upper channel assembly.

(6) Remove horizontal spring.

(7) Remove the through bolts from each end of the side rail assembly.

(8) Remove the through bolts from the transmission assemblies and separate rails and transmission assemblies (Fig. 6).

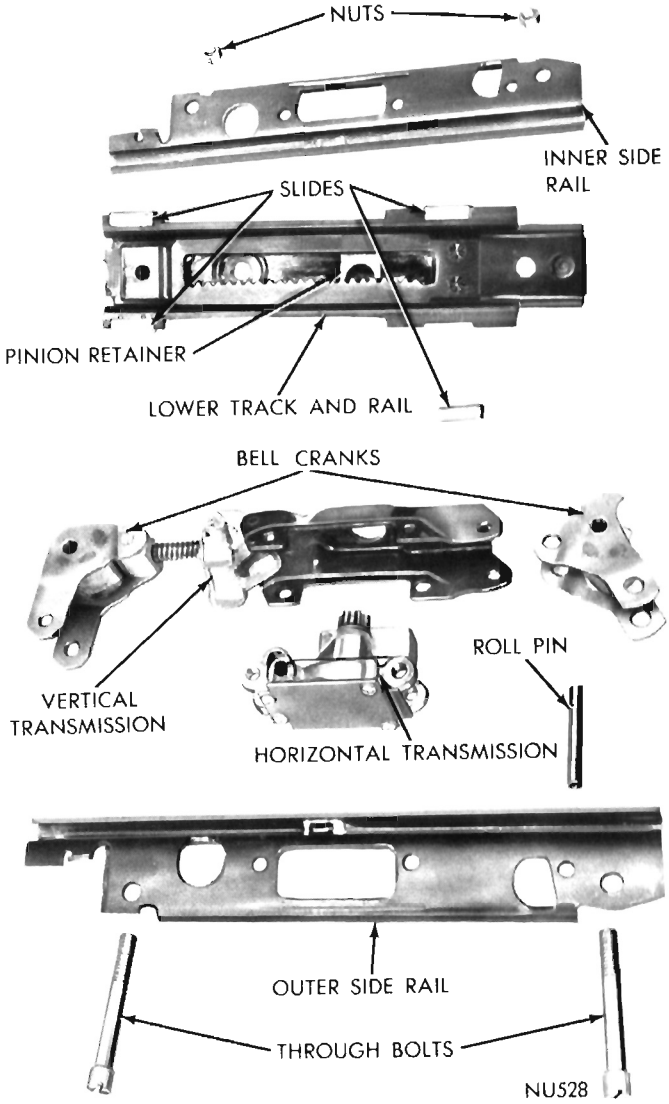

Fig. 6—Side Rail (Disassembled)

Installation

During assembly constant care should be exercized to keep both track and rail assemblies synchronized.

(1) Position transmission assemblies between side rails and install through bolts and nuts.

(2) Locate roll pin and install through bolts in each end of assembly.

(3) Install horizontal spring.

(4) Position rail assemblies at end of torsion bars. Line up holes and upper channel and install rear (3/8″) clevis pin and cotter key.

(5) Insert vertical spring and apply pressure with "C" clamp just enough to align holes in mounting base and upper channel. Install front (5/16″) clevis pin and cotter key.

(6) Install motor assembly following procedure outlined under "Motor."

(7) Install seat assembly following procedure outlined under, "Seat Assembly and Adjuster."

SPECIFICATIONS

ELECTRICAL

BATTERY

Engine Usage	170 Cu. In. Engine Standard Equipment	170 Cu. In. Engine Special Equipment	225, 273, LA-318 and 340 Cu. In. Engines Standard Equipment
Capacity (Ampere Hours)	38	48	48
Voltage	12	12	12
Number of Plates Per Cell	7	9	9
Ground Terminal	Negative	Negative	Negative
Model Identification Number	20-HB-38	24-MB-48	24-MB-48
Engine Usage	383 Cu. In. Engine Standard Equipment	170, 225, 273, and 340 Cu. In. Engine Special Equipment	170, 225, 273, LA-318, and 340 Cu. In. Engines Special Equipment
Capacity (Ampere Hours)	59	59	70
Voltage	12	12	12
Number of Plates Per Cell	11	11	11
Ground Terminal	Negative	Negative	Negative
Model Identification Number	24-MB-59	24-MB-59	24-HB-70R

Engine Usage	426 and 440 Cu. In. Engines Standard Equipment	383 Cu. In., 440 Cu. In. Engines Special Equipment
Capacity (Ampere Hours)	70	70
Voltage	12	12
Number of Plates Per Cell	13	13
Ground Terminal	Negative	Negative
Model Identification Number	27-MB-70	27-MB-70R

GEAR REDUCTION STARTING MOTOR

(All Models Equipped with 170 Cu. In. Engine)

Starting Motor Model	2098500
Make	Chrysler
Voltage	12
No. of Fields	4 (4 Series)
No. of Poles	4
Brushes	4
Spring Tension	32 to 36 Ounces
Drive	Solenoid Shift Overrunning Clutch
End Play	.010"-.045"
Cranking Amperage Draw Test	*155 to 170 Amps.
Free-Running Test	
Voltage	11
Amperage Draw Maximum	90
Minimum Speed RPM	2950
Locked Resistance Test	
Voltage	4
Amperage Draw	340 to 420
Solenoid	
Pull-In Coil	13.3 to 14.9 Amps. @ 6.0 Volts at 77°F.
Hold-In Coil	8.0 to 9.0 Amps. @ 6.0 Volts at 77°F.

* Engine should be at operating temperature.

GEAR REDUCTION STARTING MOTOR

(All Models Except Models Equipped with the 170 Cu. In. Engines)

Starting Motor Model	2095150
Make	Chrysler
Voltage	12
No. of Fields	4 (3 Series, 1 Shunt)

No. of Poles	4
Brushes	4
Spring Tension	32 to 36 Ounces
Drive	Solenoid Shift Overrunning Clutch
End Play	.010"-.045"
Cranking Amperage Draw Test	*155 to 170 Amps. 273 Cu. In. Engines *165 to 180 Amps. 225, 318 and 340 Cu. In. Engines *180 to 200 Amps. 383, 426 and 440 Cu. In. Engines
Free-Running Test	
Voltage	11
Amperage Draw	90
Speed RPM	1925 to 2600
Locked Resistance Test	
Voltage	4
Amperage Draw	400 to 450
Solenoid	
Pull-In Coil	13.3 to 14.9 Amps. @ 6.0 Volts at 77°F.
Hold-In Coil	8.0 to 9.0 Amps. @ 6.0 Volts at 77°F.

* Engine should be at operating temperature

STARTING MOTOR

(Direct Drive)

(Taxi with 11 Inch Clutch and 225 Cu. In. Engine)

Starting Motor Model	1889100
Make	Chrysler
Voltage	12
No. of Fields	4 (3 Series 1 Shunt)
No. of Poles	4
Brushes	4
Spring Tension	32 to 36 Ounces
Drive	Solenoid Shift Overrunning Clutch
End Play	.005" Minimum
Cranking Amperage Draw Test	165-185 Amps.*
Free-Running Test	
Voltage	11
Amperage Draw	78 Amps. Maximum
Minimum Speed RPM	3800 RPM
Locked-Resistance Test	
Voltage	4
Amperage Draw	310 to 445
Solenoid	
Pull-In Coil	22.4 to 24.0 Amps. @ 6.0 Volts and 77°F.
Hold-In Coil	8.3 to 9.3 Amps. @ 6.0 Volts and 77°F.

* Engine should be at operating temperature.

DIRECT DRIVE STARTING MOTOR

(426 Cu. In. Engine—Hemi-Street Package—Manual Transmission)

Starting Motor Model	2642930
Make	Chrysler
Voltage	12
No. of Fields	4 (3 Series 1 Shunt)
No. of Poles	4
Brushes	4
Spring Tension	32 to 36 Ounces

Drive	Solenoid Shift Overrunning Clutch
End Play	.005" Minimum
Cranking Amperage Draw Test	180 to 220 Amps. *
Free-Running Test	
Voltage	11
Amperage Draw	78 Amps. Maximum
Minimum Speed RPM	3800 Minimum
Locked-Resistance Test	
Voltage	4
Amperage Draw	310 to 445
Solenoid	
Pull-In Coil	22.4 to 24.0 Amps. at 6 Volts and 77°F.
Hold-In Coil	8.3 to 9.3 Amps. at 6 Volts and 77°F.

* Engine Should Be At Operating Temperature.

ALTERNATOR

Rotation	Clockwise at Drive End
Voltage	12 Volt System
Current Output	Design Controlled
Voltage Output	Limited by Voltage Regulator
Brushes (Field)	2
Condenser Capacity	.50 Microfarad plus or minus 20%
Field Current Draw @ 12 Volts	2.38 to 2.75 Maximum amperes
Current Output—	
Standard With 170 or 225 Cu. In. Engine	26 plus or minus 3 amperes*
Standard with 318, 340, 273, 383, 426, 440 Engines	34.5 plus or minus 3 amperes*
Special Equipment, Heavy Duty and/or Air Conditioning	41 plus or minus 3 amperes*
Special Equipment	51 plus or minus 3 amperes*

*Plus or minus three ampere tolerance is provided to allow for temperature variation. Current output is measured at 1250 engine RPM and 15 volts at the alternator. If measured at the battery, current output will be approximately 5 amperes lower than above values. This is a test point and not the maximum output.

Voltage is controlled by variable load (carbon pile) across the battery.

ALTERNATOR VOLTAGE REGULATOR

Alternator Voltage	(Chrysler Built)
Regulator Identification Number	2098300
Volts	12
Ground Polarity	Negative
Point Gap	.014 inch plus or minus .002 inch
Air Gap	.048 to .052 inch nominal setting**

**Measure gap with gauge back of stop.

Temperature in Degrees	47°F.	70°F.	93°F.	117°F.	140°F.	163°F.
Minimum Setting	13.6 to	13.5 to	13.4 to	13.3 to	13.2 to	13.1 to
Maximum Setting	14.6	14.5	14.4	14.3	14.2	14.1

IGNITION SYSTEM

Engine Application	WITH CLEANER AIR PACKAGE 170 Manual Trans.	170 Automatic Trans.
Engine Displacement	170 Cu. In.	170 Cu. In.
Distributor Part No.—(Chrysler Built)	2875813	2875855
Advance—Centrifugal (Distributor Degrees at Distributor RPM)	2° to 6° @ 600 RPM 12.5° to 14.5° @ 1100 RPM 17° to 19° @ 2200 RPM	1° to 8° @ 550 RPM 9° to 11° @ 900 RPM 14° to 16° @ 2200 RPM
Advance—Vacuum (Distributor Degrees at Inches of Mercury)	1° to 4° @ 7.5″ 6° to 8.5° @ 10″	1° to 4° @ 7.5″ 6° to 8.5° @ 10″
Contact Gap	.017″ to .023″	.017″ to .023″
Dwell Angle	42° to 47°	42° to 47°
Contact Arm Spring Tension	17 to 20 oz.	17 to 20 oz.
Condenser Capacity	.25 to .285 mfd.	.25 to .285 mfd.
Shaft Side Play (New or Rebuilt)	.000″ to .003″ •	.000″ to .003″ *
Shaft End Play (After Assembly)	.003″ to .017″	.003″ to .017″
Rotation	Clockwise	Clockwise
Timing	5°ATC**	TDC
Spark Plug Type	N14Y-Champion or P-6-6P Mopar***	N14Y-Champion or P-6-6P Mopar***
Size	14MM-3/4″ Reach	14MM-3/4″ Reach
Gap	.035″	.035″
Firing Order	1-5-3-6-2-4	1-5-3-6-2-4
Coil	Chrysler-Prestolite —or—	Chrysler-Essex
Identification Number	2444242	2444241
Primary Resistance @ 70°-80°F	1.65 to 1.70 Ohms	1.41 to 1.55 Ohms
Secondary Resistance @ 70°-80°F	9400 to 11700 Ohms	9200 to 10600 Ohms
Ballast Resistor	2095501	
Resistance @ 70°-80°F	0.5 to 0.6 Ohms	
Current Draw (Coil and ballast resistor in circuit) Engine Stopped	3.0 amperes	
Engine Idling	1.9 amperes	

* Service wear tolerance should not exceed .006 inch.

** Set at idle speed; See "Idle Speed Adjustment, Fuel System."

*** No gasket required.

IGNITION SYSTEM

Engine Application	WITH CLEANER AIR PACKAGE 225 Manual Transmission	225 Automatic Transmission
Engine Displacement	225 Cu. In.	225 Cu. In.
Distributor Part No.—(Chrysler Built)	2875822	2875826
Advance—Centrifugal (Distributor Degrees at Distributor RPM)	1° to 5° @ 550 RPM 9.5° to 11.5° @ 1000 RPM 12° to 14° @ 2000 RPM	1° to 5° @ 550 RPM 9.5° to 11.5° @ 1000 RPM 12° to 14° @ 2000 RPM
Advance—Vacuum (Distributor Degrees at Inches of Mercury)	0.5° to 3.5° @ 10″ 5.25° to 7.75° @ 16″	0.5° to 3.5° @ 7″ 5.25° to 7.75° @ 10″
Contact Gap	.017″ to .023″	.017″ to .023″
Dwell Angle	42° to 47°	42° to 47.
Contact Arm Spring Tension	17 to 20 oz.	17 to 20 oz.
Condenser Capacity	.25 to .285 mfd.	.25 to .285 mfd.
Shaft Side Play (New or Rebuilt)	.000″ to .003″ *	.000″ to .003″ *
Shaft End Play (After Assembly)	.003″ to .017″	.003″ to .017″
Rotation	Clockwise	Clockwise
Timing	TDC**	TDC**
Spark Plug Type	N14Y-Champion or P-6-6P Mopar***	N14Y-Champion or P-6-6P Mopar***

	WITH CLEANER AIR PACKAGE	
	225 Manual Trans.	225 Automatic Trans.
Size	14MM-3/4" Reach	14MM-3/4" Reach
Gap	.035"	.035"
Firing Order	1-5-3-6-2-4	1-5-3-6-2-4
Coil	Chrysler-Prestolite —or—	Chrysler-Essex
Identification Number	2444242	2444241
Primary Resistance @ 70°-80°F	1.65 to 1.79 Ohms	1.41 to 1.55 Ohms
Secondary Resistance @ 70°-80°F	9400 to 11700 Ohms	9200 to 10600 Ohms
Ballast Resistor	2095501	
Resistance @ 70°-80°F	0.5 to 0.6 Ohms	
Current Draw (Coil and ballast resistor in circuit) Engine Stopped	3.0 amperes	
Engine Idling	1.9 amperes	

* Service wear tolerance should not exceed .006 inch.

** Set at idle speed; See "Idle Speed Adjustment, Fuel System."

*** No gasket required.

IGNITION SYSTEM

	WITH CLEANER AIR PACKAGE
Engine Application	273 2-Barrel Carburetor Manual or Automatic Trans.
Engine Displacement	273 Cu. In.
Distributor Part No.—(Chrysler Built)	2875790
Advance—Centrifugal (Distributor Degrees at Distributor RPM)	2° to 8.5° @ 550 RPM 11.5° to 13.5° @ 900 RPM 14° to 16° @ 1900 RPM
Advance—Vacuum (Distributor Degrees at Inches of Mercury)	2° to 5.5° @ 8.5" 10.5° to 13.5° @ 13.5"
Contact Gap	.014" to .019"
Dwell Angle	30° to 35°
Contact Arm Spring Tension	17 to 20 oz.
Condenser Capacity	.25 to .285 mfd.
Shaft Side Play (New or Rebuilt)	.000" to .003" *
Shaft End Play (After Assembly)	.003" to .017"
Rotation	Clockwise
Timing	2-1/2° ATC
Spark Plug Type	N14Y Champion or P6-6P Mopar
Size	14MM-3/4" Reach
Gap	.035"
Firing Order	1-8-4-3-6-5-7-2
Coil	Chrysler-Prestolite —or— Chrysler-Essex
Identification Number	2444242 2444241
Primary Resistance @ 70°-80°F	1.65 to 1.79 Ohms 1.41 to 1.55 Ohms
Secondary Resistance @ 70°-80°F	9400 to 11700 Ohms 9200 to 10600 Ohms
Ballast Resistor	2095501
Resistance @ 70°-80°F	0.5 to 0.6 Ohms
Current Draw (Coil and ballast resistor in circuit) Engine Stopped	3.0 amperes
Engine Idling	1.9 amperes

* Service wear tolerance should not exceed .006 inch.

** Set at idle speed; See "Idle Speed Adjustment, Fuel System."

IGNITION SYSTEM

Engine Application	WITH CLEANER AIR PACKAGE 340 4-Barrel Carburetor Manual Transmission	340 4-Barrel Carburetor Automatic Transmission
Engine Displacement	340 Cu. In.	340 Cu. In.
Distributor Part No.—(Chrysler Built)	2875782	2875779
(Prestolite Built)	IBS-4015B	
Advance—Centrifugal (Distributor Degrees at Distributor RPM)	1° to 6.5° @ 550 RPM 9.5° to 11.5° @ 900 RPM 12° to 14° @ 1800 RPM	2° to 6° @ 600 RPM 7° to 9° @ 900 RPM 10° to 12° @ 2000 RPM
Advance—Vacuum (Distributor Degrees at Inches of Mercury)	2° to 5.5° @ 8" 7° to 10° @ 10.5"	2° to 5.5° @ 8" 7° to 10° @ 10.5"
Contact Gap	.014" to .019"	.014" to .019"
Dwell Angle	one set points 27° to 32° both sets points 37° to 42°	30° to 35°
Contact Arm Spring Tension	17 to 21.5 oz.	17 to 20 oz.
Condenser Capacity	.25 to .285 mfd.	.25 to .285 mfd.
Shaft Side Play (New or Rebuilt)	.000" to .003"*	.000" to .003"*
Shaft End Play (After Assembly)	.003" to .017"	.003" to .017"
Rotation	Clockwise	Clockwise
Timing	TDC**	5° BTC**
Spark Plug Type	N9Y-Champion	N9Y-Champion
Size	14MM-3/4" Reach	14MM-3/4" Reach
Gap	.035"	.035"
Firing Order	1-8-4-3-6-5-7-2	1-8-4-3-6-5-7-2
Coil	Chrysler-Essex —or— Chrysler-Prestolite	
Identification Number	2444241	2444242
Primary Resistance @ 70°-80°F	1.41 to 1.55 Ohms	1.65 to 1.79 Ohms
Secondary Resistance @ 70°-80°F	9200 to 10600 Ohms	9400 to 11700 Ohms
Ballast Resistor	2095501	
Resistance @ 70°-80°F	0.5 to 0.6 Ohms	
Current Draw (Coil and ballast resistor in circuit) Engine Stopped	3.0 amperes	
Engine Idling	1.9 amperes	

* Service wear tolerance should not exceed .006 inch.

** Set at idle speed; See "Idle Speed Adjustment, Fuel System."

IGNITION SYSTEM

Engine Application	WITH CLEANER AIR PACKAGE LA-318 2-Barrel Carburetor Manual and Automatic Trans.
Engine Displacement	318 Cu. In.
Distributor Part No.—(Chrysler Built)	2875796
Advance—Centrifugal (Distributor Degrees at Distributor RPM)	1.5° to 6.5° @ 550 RPM 7.5° to 9.5° @ 850 RPM 17° to 19° @ 2400 RPM
Advance—Vacuum (Distributor Degrees at Inches of Mercury)	1° to 4° @ 10.5" 8.25° to 10.75° at 15"
Contact Gap	.014" to .019"
Dwell Angle	30° to 35°
Contact Arm Spring Tension	17 to 20 oz.
Condenser Capacity	.25 to .285 mfd.
Shaft Side Play (New or Rebuilt)	.000" to .003" *
Shaft End Play (After Assembly)	.003" to .017"
Rotation	Clockwise

Timing	TDC**	
Spark Plug Type	N-14Y Champion or P-6-6P Mopar	
Size	14MM-3/4" Reach	
Gap	.035"	
Firing Order	1-8-4-3-6-5-7-2	
Coil	Chrysler-Prestolite —or—	Chrysler-Essex
Identification Number	2444242	2444241
Primary Resistance @ 70°-80°F	1.65 to 1.79 Ohms	1.41 to 1.55 Ohms
Secondary Resistance @ 70°-80°F	9400 to 11700 Ohms	9200 to 10600 Ohms
Ballast Resistor	2095501	
Resistance @ 70°-80°F	0.5 to 0.6 Ohms	
Current Draw (Coil and ballast resistor in circuit) Engine Stopped	3.0 amperes	
Engine Idling	1.9 amperes	

* Service wear tolerance should not exceed .006 inch.

** Set at idle speed; See "Idle Speed Adjustment, Fuel System."

IGNITION SYSTEM

	WITH CLEANER AIR PACKAGE	
Engine Application	**383 2-Barrel Carburetor Manual Trans.**	**383 2-Barrel Carburetor Automatic Trans.**
Engine Displacement	383 Cu. In.	383 Cu. In.
Distributor Part No.—(Chrysler Built)	2875742	2875747
Advance—Centrifugal (Distributor Degrees at Distributor RPM)	1° to 9.5° @ 550 RPM 11° to 13° @ 800 RPM 21° to 23° @ 2350 RPM	1° to 6° @ 500 RPM 8° to 10° @ 750 RPM 17° to 19° @ 2300 RPM
Advance—Vacuum (Distributor Degrees at Inches of Mercury)	2° to 5.5° @ 8.5" 10.5° to 13.5° @ 13.5"	2° to 5.5° @ 8.5" 10.5° to 13.5° @ 13.5"
Contact Gap	.014" to .019"	.014" to .019"
Dwell Angle	30° to 35°	30° to 35°
Contact Arm Spring Tension	17 to 20 oz.	17 to 20 oz.
Condenser Capacity	.25 to .285 mfd.	.25 to .285 mfd.
Shaft Side Play (New or Rebuilt)	.000" to .003"*	.000" to .003"*
Shaft End Play (After Assembly)	.003" to .017"	.003" to .017"
Rotation	Counterclockwise	Counterclockwise
Timing	TDC **	7 1/2° BTC **
Spark Plug Type	J-14Y Champion or P-3-6P MOPAR	J-14Y Champion or P-3-6P MOPAR
Size	14MM 3/8" Reach	14MM 3/8" Reach
Gap	.035"	.035"
Firing Order	1-8-4-3-6-5-7-2	1-8-4-3-6-5-7-2
Coil	Chrysler-Essex —or—	Chrysler-Prestolite
Identification Number	2444241	2444242
Primary Resistance @ 70°-80°F	1.41 to 1.55 Ohms	1.65 to 1.79 Ohms
Secondary Resistance @ 70°-80°F	9200 to 10600 Ohms	9400 to 11700 Ohms
Ballast Resistor	2095501	
Resistance @ 70°-80°F	0.5 to 0.6 Ohms	
Current Draw (Coil and ballast resistor in circuit) Engine Stopped	3.0 Amperes	
Engine Idling	1.9 Amperes	

* Service wear tolerance should not exceed .006 inch.

** Set at idle speed; See "Idle Speed Adjustment, Fuel System."

IGNITION SYSTEM

Engine Application	WITH CLEANER AIR PACKAGE 383 4-Barrel Carburetor Manual Transmission	 383 4-Barrel Carburetor Automatic Transmission
Engine Displacement	383 Cu. In.	383 Cu. In.
Distributor Part No.—(Chrysler Built)	2875750	2875731
Advance—Centrifugal (Distributor Degrees at Distributor RPM)	1° to 7° @ 550 RPM 12° to 14° @ 900 RPM 17° to 19° @ 2500 RPM	1° to 7.5° @ 550 RPM 10.5° to 12.5° @ 850 RPM 15° to 17° @ 2500 RPM
Advance—Vacuum (Distributor Degrees at Inches of Mercury)	0.5° to 3.5° @ 8″ 9° to 12° @ 15″	0.5° to 3.5° @ 8″ 9° to 12° @ 15″
Contact Gap	.014″ to .019″	.014″ to .019″
Dwell Angle	30° to 35°	30° to 35°
Contact Arm Spring Tension	17 to 20 oz.	17 to 20 oz.
Condenser Capacity	.25 to .285 mfd.	.25 to .285 mfd.
Shaft Side Play (New or Rebuilt)	.000″ to .003″*	.000″ to .003″*
Shaft End Play (After Assembly)	.003″ to .017″	.003″ to .017″
Rotation	Counterclockwise	Counterclockwise
Timing	TDC **	5° BTC **
Spark Plug Type	J-11Y Champion or P-3-4P Mopar***	J-11Y Champion or P-3-4P Mopar***
Size	14MM-3/8″ Reach	14MM-3/8″ Reach
Gap	.035″	.035″
Firing Order	1-8-4-3-6-5-7-2	1-8-4-3-6-5-7-2
Coil	Chrysler-Prestolite—or— Chrysler-Essex	
Identification Number	2444242	2444241
Primary Resistance @ 70°-80°F	1.65 to 1.79 Ohms	1.41 to 1.55 Ohms
Secondary Resistance @ 70°-80°F	9400 to 11700 Ohms	9200 to 10600 Ohms
Ballast Resistor	2095501	
Resistance @ 70°-80°F	0.5 to 0.6 Ohms	
Current Draw (Coil and ballast resistor in circuit) Engine Stopped	3.0 amperes	
Engine Idling	1.9 amperes	

* Service wear tolerance should not exceed .006 inch.

** Set at idle speed; See "Idle Speed Adjustment, Fuel System."

*** J-11Y Champion. If J-11Y are not available, use Mopar P-3-4P or Champion J-10-Y.

IGNITION SYSTEM

Engine Application	WITH CLEANER AIR PACKAGE 383 4-Barrel Carburetor Manual (Formula "S" Only) Transmission	 383 4-Barrel Carburetor Automatic (Formula "S" Only) Transmission
Engine Displacement	383 Cu. In.	383 Cu. In.
Distributor Part No.—(Chrysler No. (Prestolite Built)	2875715 IBS-4016A	2875846 IBS-4016
Advance—Centrifugal (Distributor Degrees at Distributor RPM)	1° to 7° @ 550 RPM 12° to 14° @ 900 RPM 17° to 19° @ 2500 RPM	1° to 7.5° @ 550 RPM 10.5° to 12.5° @ 850 RPM 15° to 17° @ 2500 RPM
Advance—Vacuum (Distributor Degrees at Inches Mercury)	0.5° to 3.5° @ 8″ 9° to 12° @ 15″	1° to 3.5° @ 8″ 9° to 12° @ 15″
Contact Gap	.014″ to .019″	.014″ to .019″
Dwell Angle	one set points 27°-32° both sets points 37°-42°	one set points 27°-32° both sets points 37°-42°
Contact Arm Spring Tension	17 to 21.5 oz.	17 to 21.5 oz.
Condenser Capacity	.25 to .285 mfd.	.25 to .285 mfd.

Shaft Side Play (New or Rebuilt)	.000" to .003"*	.000" to .003"*
Shaft End Play (After Assembly)	.003" to .017"	.003" to .017"
Rotation	Counterclockwise	Counterclockwise
Timing	TDC	5° BTC**
Spark Plug Type	J-11Y Champion or P-3-4P Mopar***	J-11Y Champion or P-3-4P MoPar***
Size	14MM-3/8" Reach	14MM-3/8" Reach
Gap	.035"	.035"
Firing Order	1-8-4-3-6-5-7-2	1,8-4-3-6-5-7-2
Coil	Chrysler-Prestolite—or—Chrysler-Essex	
Identification Number	2444242	2444241
Primary Resistance @ 70°-80°F.	1.65 to 1.79 Ohms	1.41 to 1.55 Ohms
Secondary Resistance @ 70°-80°F.	9400 to 11700 Ohms	9200 to 10600 Ohms
Ballast Resistor		
Resistance @ 70°-80°F.	2095501	
Current Draw (Coil and ballast resistor in circuit) Engine Stopped	0.5 to 0.6 Ohms	
Engine Idling	3.0 amperes	
	1.9 amperes	

* Service wear tolerance should not exceed .006 inch

** Set at idle speed: See "Idle Speed Adjustment, Fuel System."

*** J-11Y Champion. If J-11Y are not available, use MoPar P-3-4P or Champion J-10Y.

IGNITION SYSTEM

WITH CLEANER AIR PACKAGE

Hemi-426 ENGINE-A102
Two 4-Barrel Carburetors

Engine Application	**Manual or Automatic Trans.**	
Engine Displacement	426 Cu. In.	
Distributor Part No.—(Chrysler Built)	2875140	
(Prestolite Built)	1BS-4014A	
Advance—Centrifugal (Distributor Degrees at Distributor RPM)	2.5° to 9.5° @ 650 RPM 10° to 12° @ 850 RPM 14° to 16° @ 1550 RPM	
Advance—Vacuum (Distributor Degrees at Inches of Mercury)	1.5° to 4.5° @ 10" 8.25° to 11° @ 15"	
Contact Gap	.014" to .019"	
Dwell Angle	one set points 27°-32° both sets points 37°-42°	
Contact Arm Spring Tension	17 to 21.5 oz.	
Condenser Capacity	.25 to .285 mfd.	
Shaft Side Play (New or Rebuilt)	.000" to .003" *	
Shaft End Play (After Assembly)	.003" to .017"	
Rotation	Counterclockwise	
Timing	TDC **	
Spark Plug Type	N10Y Champion	
Size	14MM-3/4" Reach	
Gap	.035"	
Firing Order	1-8-4-3-6-5-7-2	
Coil	Chrysler-Prestolite —or—	Chrysler-Essex
Identification Number	2444242	2444241
Primary Resistance @ 70°-80°F	1.65 to 1.79 Ohms	1.41 to 1.55 Ohms
Secondary Resistance @ 70°-80°F	9400 to 11700 Ohms	9200 to 10600 Ohms
Ballast Resistor	2095501	
Resistance @ 70°-80°F	0.5 to 0.6 Ohms	
Current Draw (Coil and ballast resistor in circuit)		
Engine Stopped	3.0 amperes	
Engine Idling	1.9 amperes	

* Service wear tolerance should not exceed .006 inch.

** Set at idle speed; See "Idle Speed Adjustment, Fuel System."

IGNITION SYSTEM

Engine Application	WITH CLEANER AIR PACKAGE 440 4-Barrel Carburetor Automatic Transmission
Engine Displacement	440 Cu. In.
Distributor Part No.—(Chrysler Built)	2875764
Advance-Centrifugal (Distributor Degrees at Distributor RPM)	0.5° to 3.5° @ 500 RPM 6.5° to 8.5° @ 850 RPM 12° to 14° @ 2250 RPM
Advance-Vacuum (Distributor Degrees at Inches Mercury)	2° to 5° @ 11.5" 10.5° to 13.5° @ 16"
Contact Gap	.014" to .019"
Dwell Angle	30° to 35°
Contact Arm Spring Tension	17 to 20 oz.
Condenser Capacity	.25 to .285 mfd.
Shaft Side Play (New or Rebult)	.000" to .003"*
Shaft End Play (After Assembly)	.003" to .017"
Rotation	Counterclockwise
Timing	7.5° BTC**
Spark Plug Type	J-13Y Champion or Mopar P-3-5P***
Size	14MM-3/8" Reach
Gap	.035"
Firing Order	1-8-4-3-6-5-7-2
Coil	Chrysler-Prestolite —or— Chrysler-Essex
Identification Number	2444242 — 2444241
Primary Resistance @ 70°-80°F	1.65 to 1.79 Ohms — 1.41 to 1.55 Ohms
Secondary Resistance @ 70°-80°F	9400 to 11700 Ohms — 9200 to 10600 Ohms
Ballast Resistor	2095501
Resistor @ 70°-80°F	0.5 to 0.6 Ohms
Current Draw (Coil and ballast resistor in circuit) Engine Stopped	3.0 amperes
Engine Idling	1.9 amperes

* Service wear tolerance should not exceed .006 inch.

** Set at idle speed; See "Idle Speed Adjustment, Fuel System."

*** If J-13Y Champion or P-3-5P Mopar are not available, use Champion J-12Y.

IGNITION SYSTEM

Engine Application	WITH CLEANER AIR PACKAGE A134-Hi-Performance 440 4-Barrel Carburetor Manual Trans.	440 4-Barrel Carburetor Automatic Trans.
Engine Displacement	440 Cu. In.	440 Cu. In.
Distributor Part No.—(Chrysler Built)	2875772	2875758
(Prestolite Built)	IBS-4014B	
Advance—Centrifugal (Distributor Degrees at Distributor RPM)	1° to 8.5° @ 550 RPM 11.5° to 13.5° @ 850 RPM 17° to 19° @ 2500 RPM	2° to 7° @ 550 RPM 9° to 11° @ 850 RPM 14° to 16° @ 2400 RPM
Advance—Vacuum (Distributor Degrees at Inches of Mercury)	1° to 4° @ 10.5" 9° to 12° @ 16"	1° to 4° @ 10.5" 9° to 12° @ 16"
Contact Gap	.014" to .019"	.014" to .019"

Dwell Angle	One set points 27° to 32° Both set points 37° to 42°		30° to 35°
Contact Arm Spring Tension	17 to 21.5 oz.		17 to 20 oz.
Condenser Capacity	.25 to .285 mfd.		.25 to .285 mfd.
Shaft Side Play (New or Rebuilt)	.000" to .003" *		.000" to .003" *
Shaft End Play (After Assembly)	.003" to .017"		.003" to .017"
Rotation	Counter-Clockwise		Counter-Clockwise
Timing	TDC **		5° BTC **
Spark Plug Type	J11Y Champion or P-3-4P Mopar***		J11Y Champion or P-3-4P Mopar***
Size	14MM-3/8" Reach		14MM-3/8" Reach
Gap	.035"		.035"
Firing Order	1-8-4-3-6-5-7-2		1-8-4-3-6-5-7-2
Coil	Chrysler-Essex	—or—	Chrysler-Prestolite
Identification Number	2444241		2444242
Primary Resistance @ 70°-80°F	1.41 to 1.55 Ohms		1.65 to 1.79 Ohms
Secondary Resistance @ 70°-80°F	9200 to 10700 Ohms		9400 to 11700 Ohms
Ballast Resistor	2095501		
Resistance @ 70°-80°F	0.5 to 0.6 Ohms		
Current Draw (Coil and ballast resistor in circuit) Engine Stopped	3.0 amperes		
Engine Idling	1.9 amperes		

* Service wear tolerance should not exceed .006 inch.
** Set at idle speed; See "Idle Speed Adjustment, Fuel System."
*** If J-11Y Champion or P-3-4P Mopar are not available, use Champion J-10Y.

LIGHT BULBS

	Barracuda	Valiant	Belvedere Satellite	Fury V.I.P.
Air Conditioner Control and Auto-Temp	**1445	**1445	**1892 (2)	**1893 (FL)
Ash Receiver	**1445	**1445	**1892	**1445
Back-up Lights	1156 (2)	1156 (2)	1156 (2)	1156 (2)
Brake System Warning Indicator	158	158	158	57
"C"-Pillar Light	211-1 (2)			
Clock			** 57	**1893 (FL)
Cornering Lights				1293 (2)
Courtesy Lamp	89		89	
Dome Lamp	1004	1004	1004	551
Pocket Panel Lamp	90	NA	90	90
Fender Mounted Turn Signal Indicator	330 (2)	330 (2)	330 (2)	330 (2)
Gear Selector Indicator	**1445	**1445	**1445	**1893 (FL)
Gear Selector with Console	** 57		** 57	** 57
Glove Compartment	1891	1891	1891	1891
High Beam Indicator	158	158	158	1892
Instrument Cluster and Speedometer Illumination	** 158 (4)	** 158 (3)	** 158 (4)	**1893 (FL)
Ignition Lamp	1445	1445	1445	1445
License Light	67	67	67	704
Map and Courtesy Lamp	89	89	90	90
Oil Pressure Indicator		158	158	57
Park and Turn Signal	1157A (2)	1157A (2)	1157 (2)	1157 (2)
Radio	**1816	**1816	**1816	**1893 (FL)
Radio with Tape			**1815	
Sealed Beam—Hi-Beam (No. 1)			4001	4001
Sealed Beam—Hi-Lo Beam (No. 2)			4002	4002
Sealed Beam—Single "7"	6012	6012		
Stereo Indicator				1445
Switch Lighting				**1893 (FL)
Tachometer	*		** 57	**1893 (FL)
Tail, Stop and Turn Signal	1157 (2)	1157 (2)	1157 (2)	1157 (2)
Trunk and/or Under Hood Lamp	1004	1004	1004	1004
Turn Signal Indicator (Panel)	158 (2)	158 (2)	158 (2)	57 (2)
Reverse 4-Speed Transmission Indicator	53	53	53	53
Heat Control				1893

FL—Floodlighted NA—Not Available
* —Included in Instrument Cluster Lighting **—Headlamp Rheostat Dimming

FUSES

Circuit	Car Model and Ampere Rating			
	Barracuda	Valiant	Belvedere Satellite	Fury VIP
Accessory	20	20	20	20
Console	—	—	—	20
Emergency Flasher	—	—	20	20
Heater and Air Conditioner	20	20	20	20
Instrument Lamps	3	3	3	3
Radio and Back-up Lamps	7.5	7.5	7.5	7.5
Stop and Dome Lamps	20	20	20	20
Tail Lamps and Cigar Lighter	20	20	20	20

CIRCUIT BREAKERS

Circuit	Location	Car Model and Ampere Rating			
		Barracuda	Valiant	Belvedere Satellite	Fury VIP
Convertible	On fuse block	—	—	30	30
	Integral with switch	30			
Door Locks	Behind right front cowl trim panel	—	—	15	15
Headlights	Integral with headlamp switch	15	15	20	20
Power Seats	On fuse block	—	—	—	30
Power Tail Gate	On fuse block	—	—	30	30
Power Windows	On fuse block	—	—	30	30
Windshield Wipers	Integral with wiper switch	6	6	7.5	7.5

WIRING DIAGRAMS

INDEX

	Page
Accessory Lamps Wiring—Valiant and Barracuda	111
Body Wiring Diagram—Barracuda	112
Body Wiring Diagram—Except Station Wagon—Belvedere and Satellite	112
Body Wiring Diagram—Except Station Wagon—Fury and VIP	113
Body Wiring Diagram—Valiant	113
Body Wiring Diagram—Station Wagon—Fury	114
Console Wiring—Fury and VIP	115
Electric Window Lift and Electric Door Locks Wiring Diagram—Fury and VIP	116
Electric Window Lift Wiring Diagram—Belvedere and Satellite	115
Engine Compartment Wiring Diagram—Except Hemi Engines—Belvedere, Satellite, Valiant and Barracuda	117
Engine Compartment Wiring Diagram—Hemi Engines	118
Engine Compartment Wiring Diagram, Fury and VIP	119
Front End Lighting—Barracuda	120
Front End Lighting—Belvedere and Satellite	120
Front End Lighting—Fury and VIP	121
Front End Lighting—Valiant	121
Instrument Panel Accessory Wiring Diagram—Belvedere and Satellite	122-123
Instrument Panel Accessory Wiring Diagram—Fury and VIP	124
Instrument Panel Wiring Diagram—Barracuda	126-127
Instrument Panel Wiring Diagram—Belvedere and Satellite	128-129
Instrument Panel Wiring Diagram—Fury and VIP	130-131
Instrument Panel Wiring Diagram—Valiant	132-133
Map Lamp Wiring (Without Map Lamp Switch) Valiant and Barracuda	134
Map Lamp Switch and Glove Box Lamp Wiring (Service Only) Valiant and Barracuda	134
Power Seats Wiring Diagram	135
Rear Window Defogger Wiring Diagram—All Models	135
Speed Control Wiring Diagram	125
Tail Gate Window Washer Switch Wiring	125

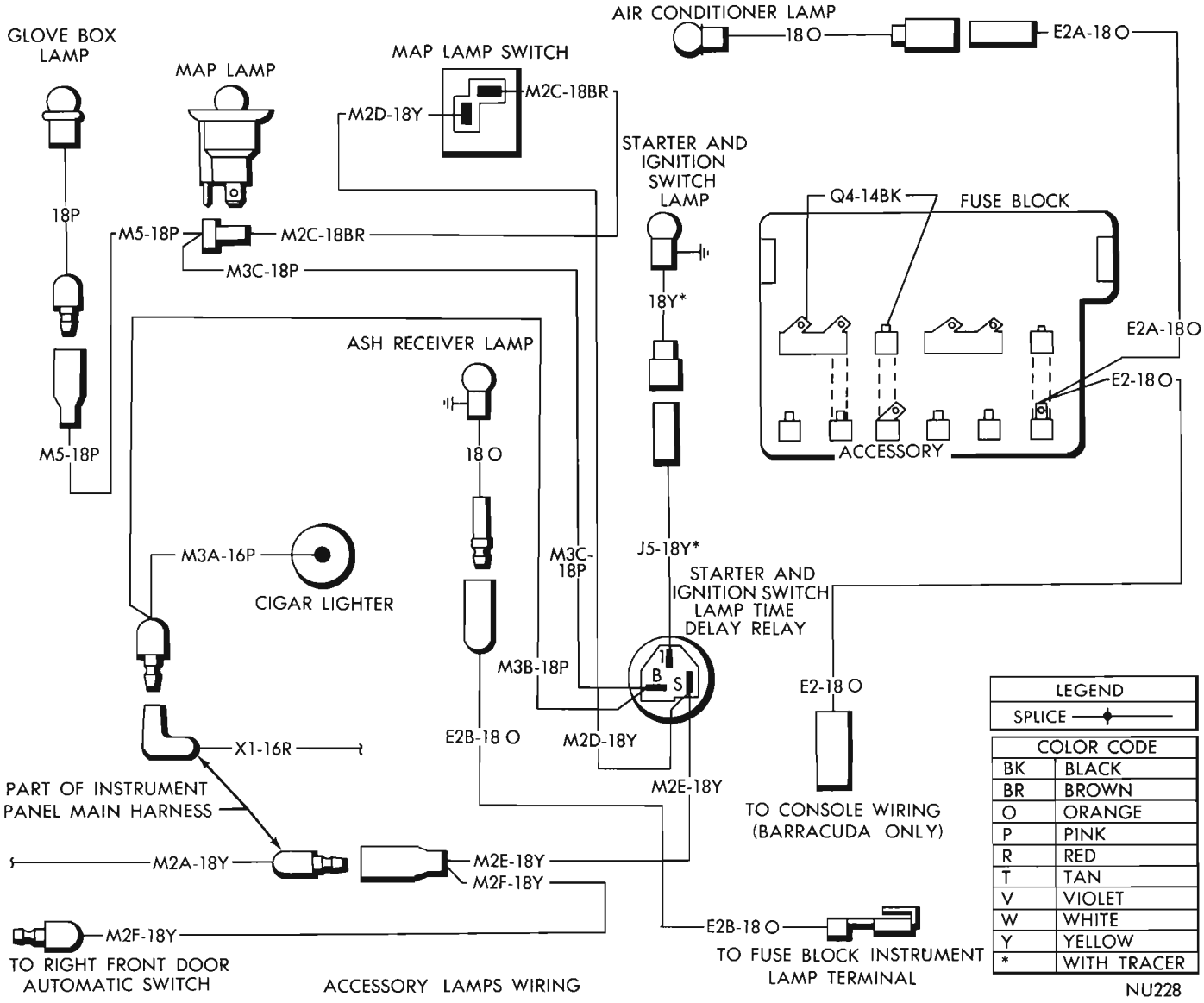

Fig. 1—Accessory Lamps Wiring—Valiant and Barracuda

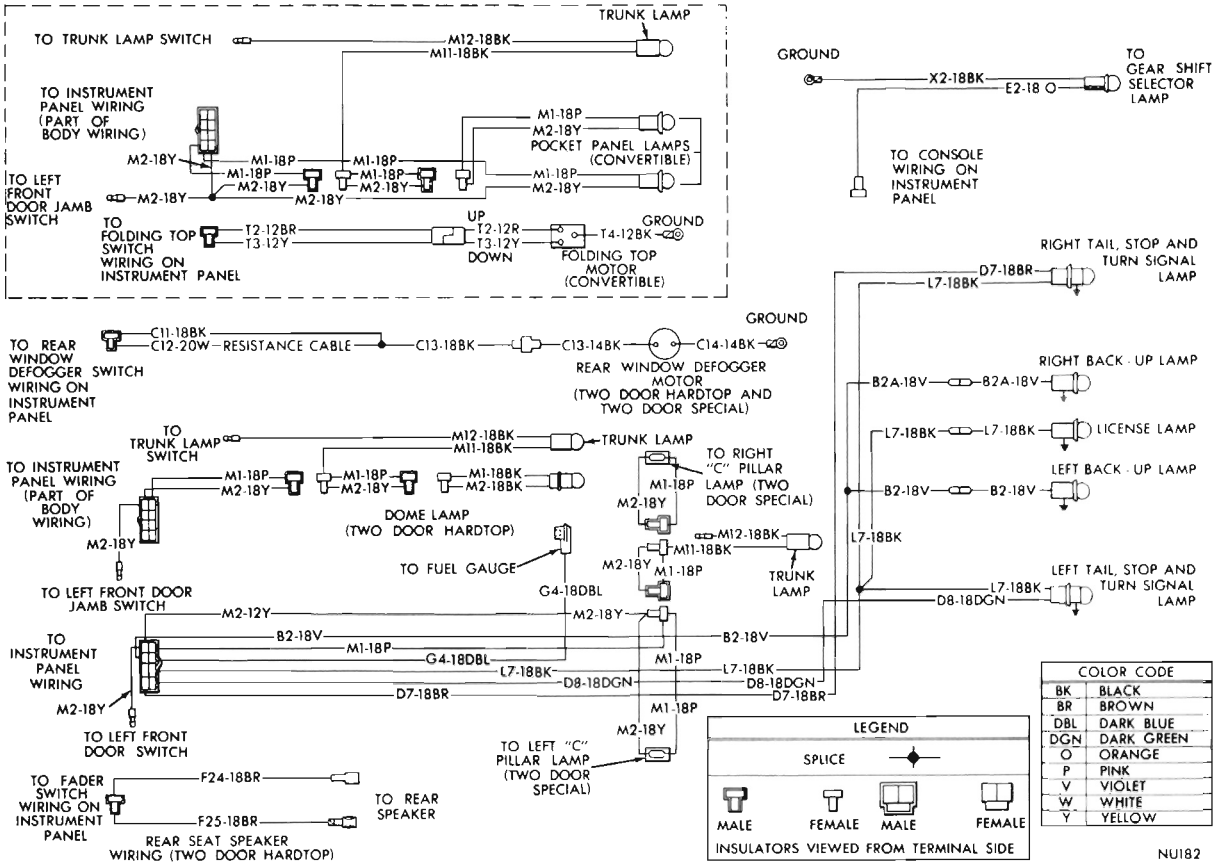

Fig. 2—Body Wiring Diagram—Barracuda

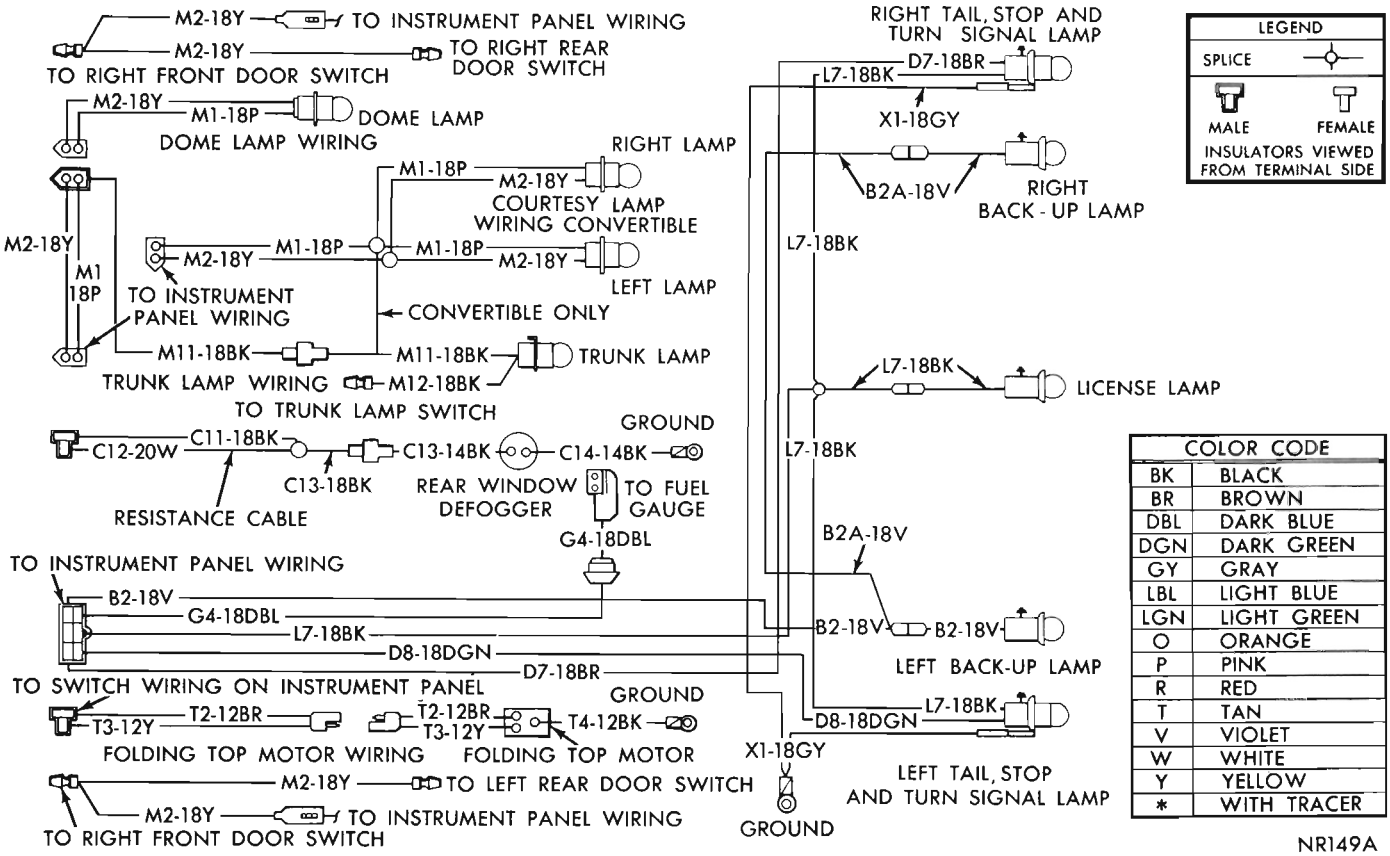

Fig. 3—Body Wiring Diagram—Except Station Wagon—Belvedere—Satellite

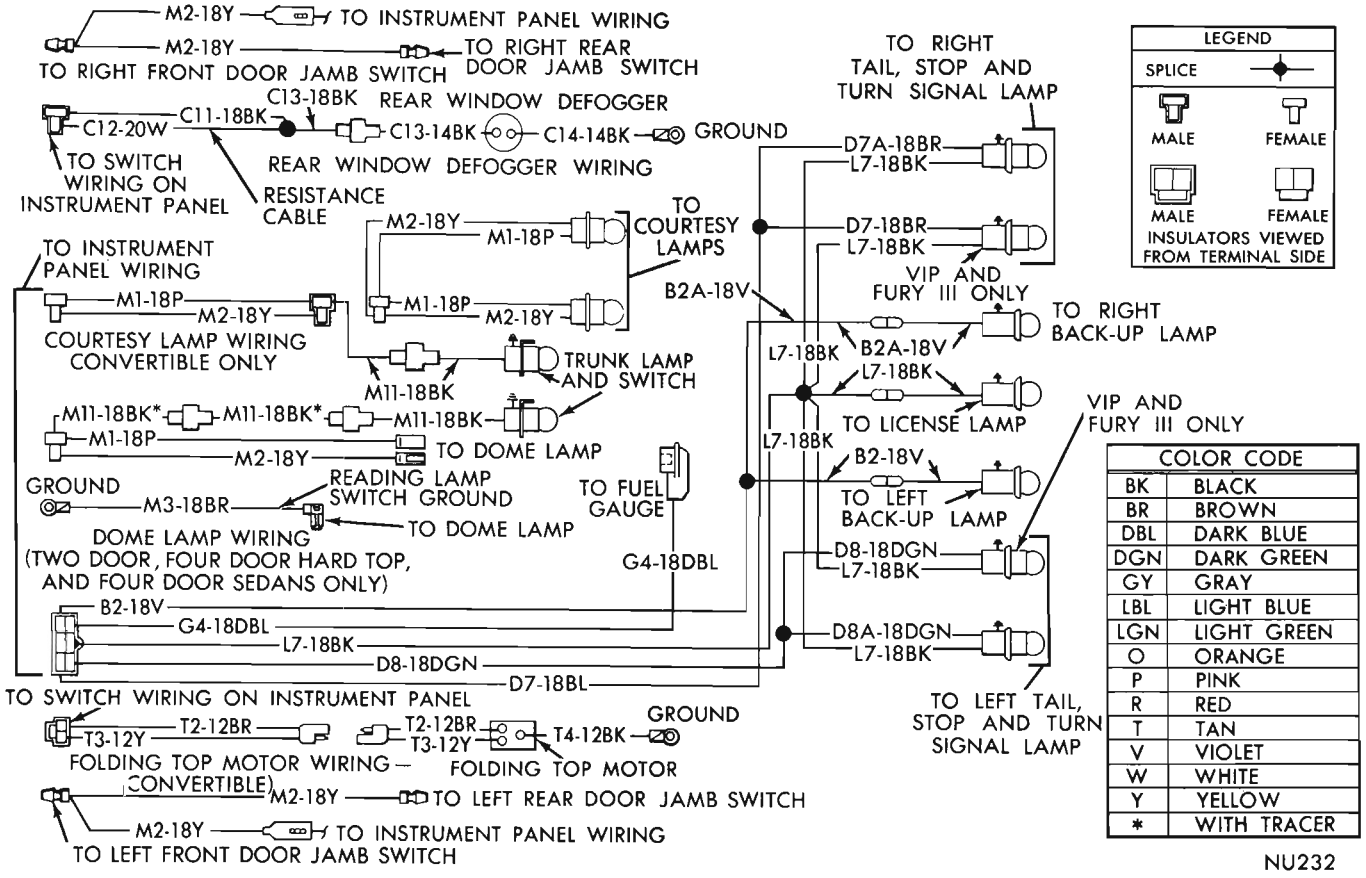

Fig. 4—Body Wiring Diagram—Except Station Wagon—Fury and VIP

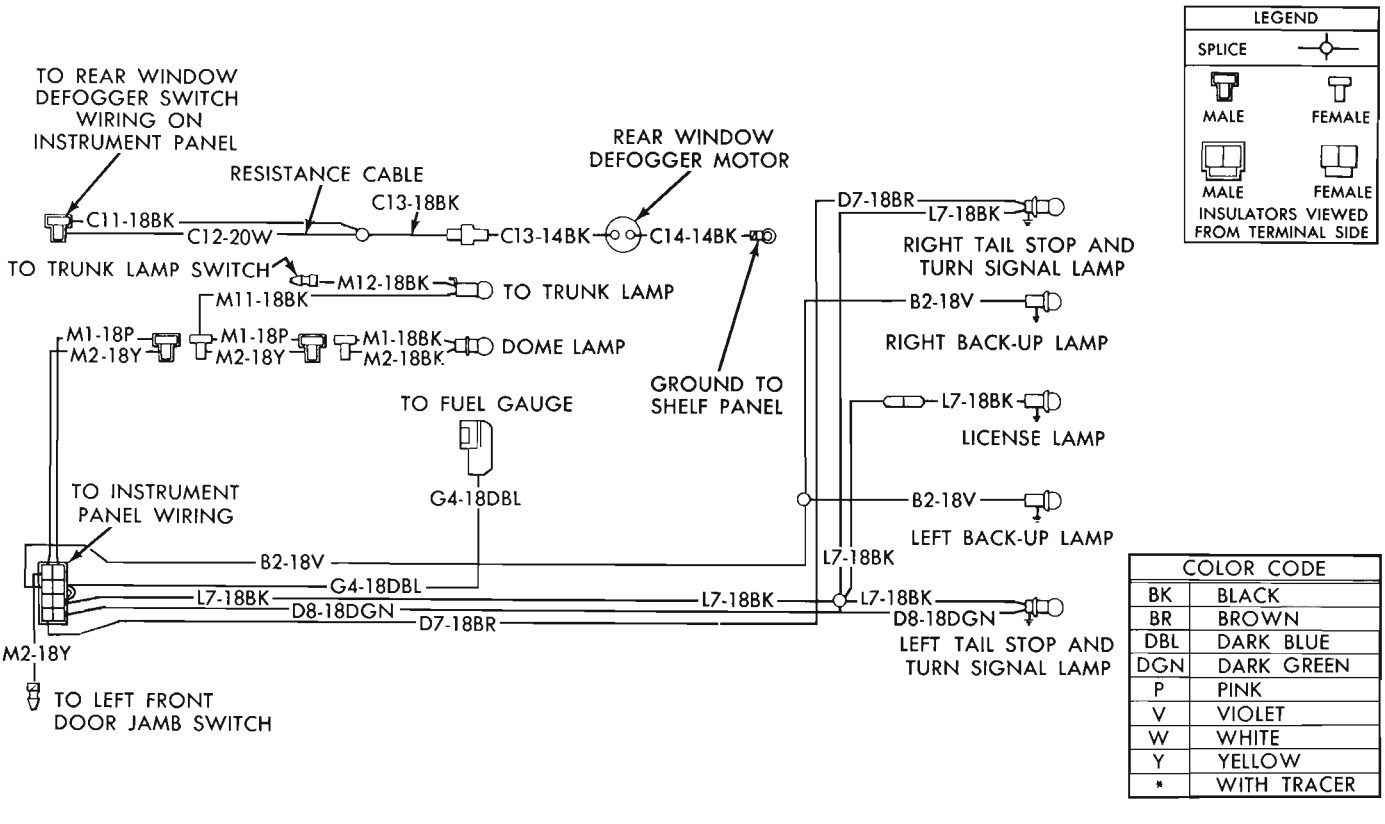

Fig. 5—Body Wiring Diagram—Valiant

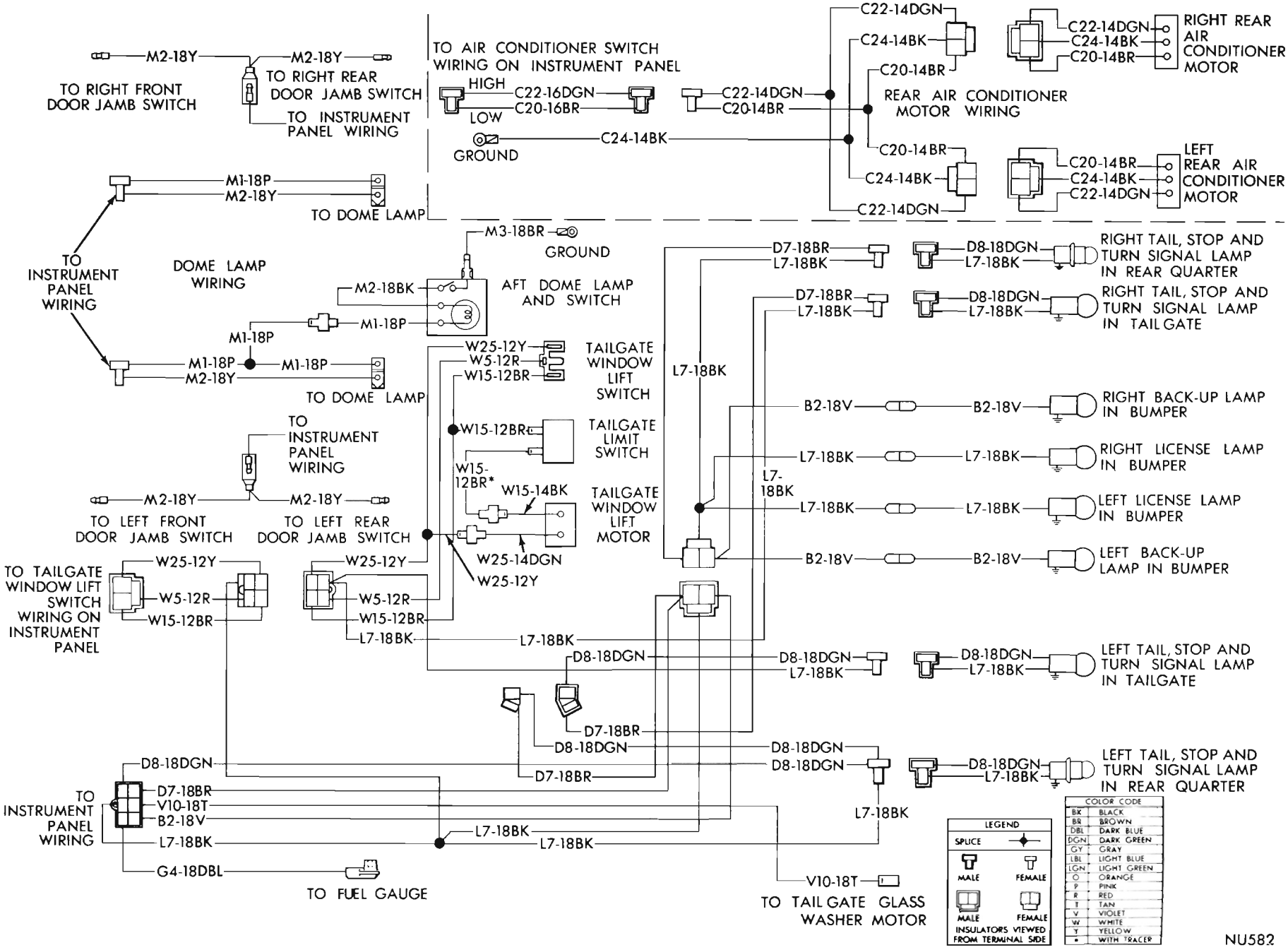

Fig. 6—Body Wiring Diagram—Station Wagon—Fury

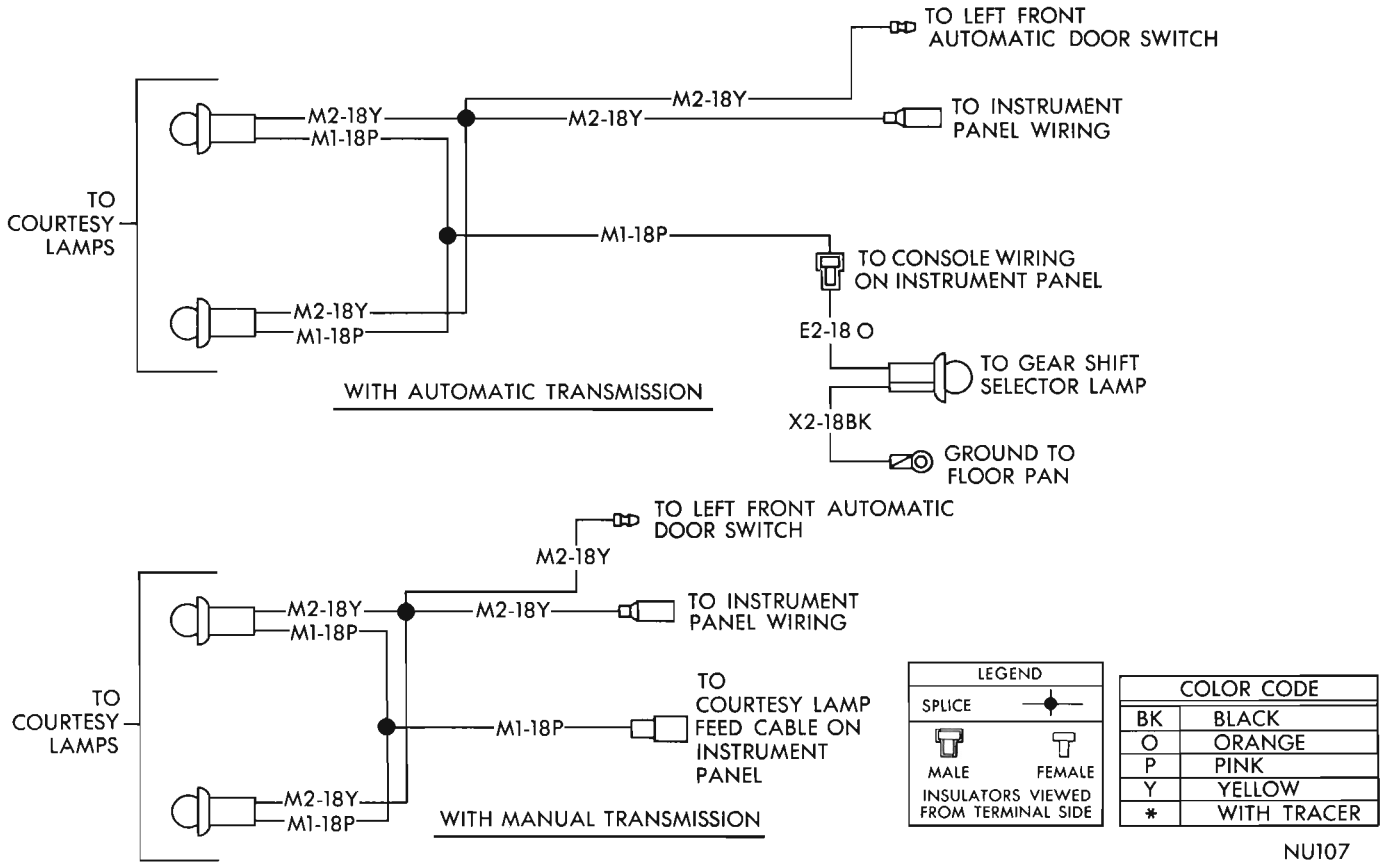

Fig. 7—Console Wiring—Fury and VIP

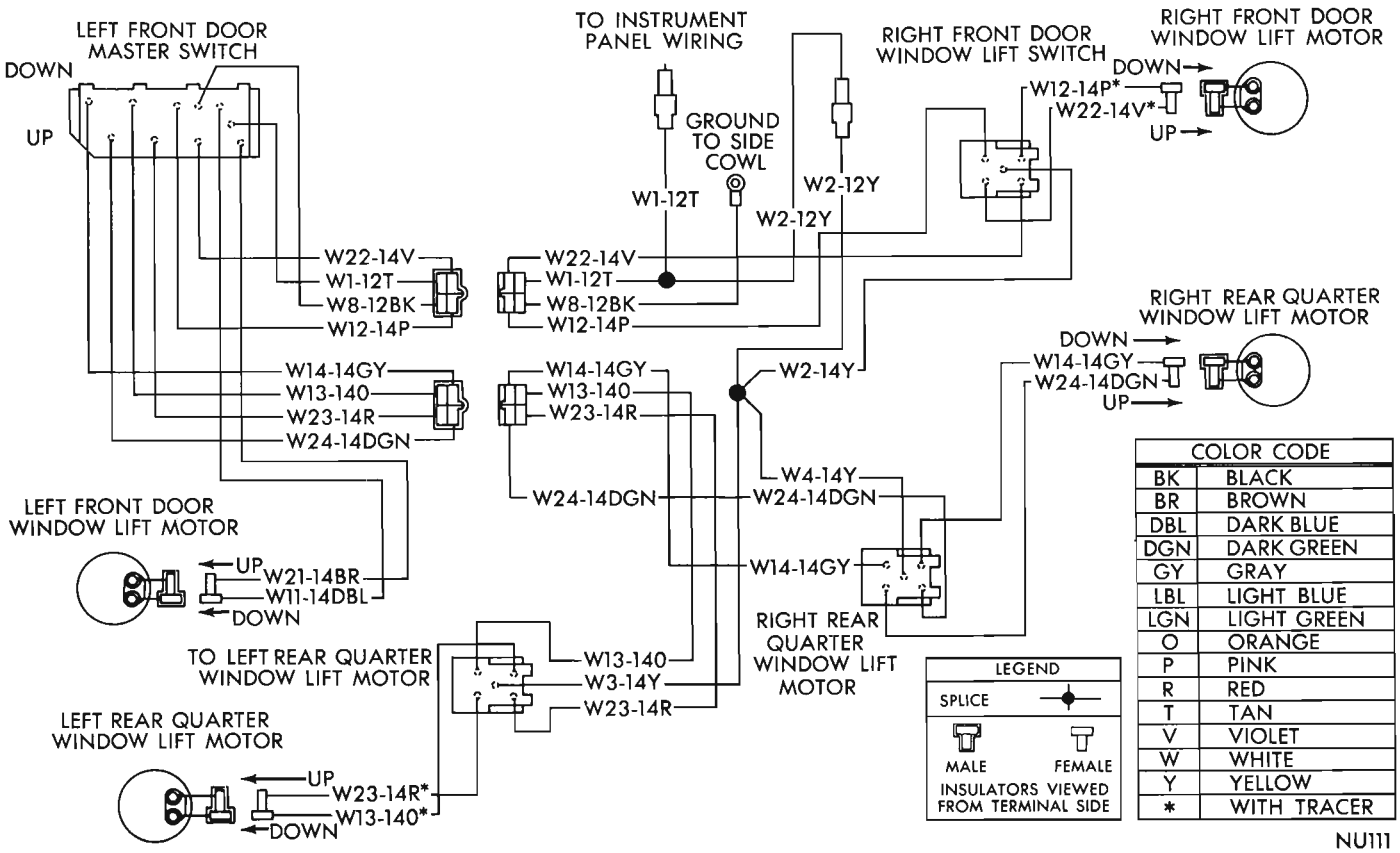

Fig. 8—Electric Window Lift Wiring Diagram—Belvedere—Satellite

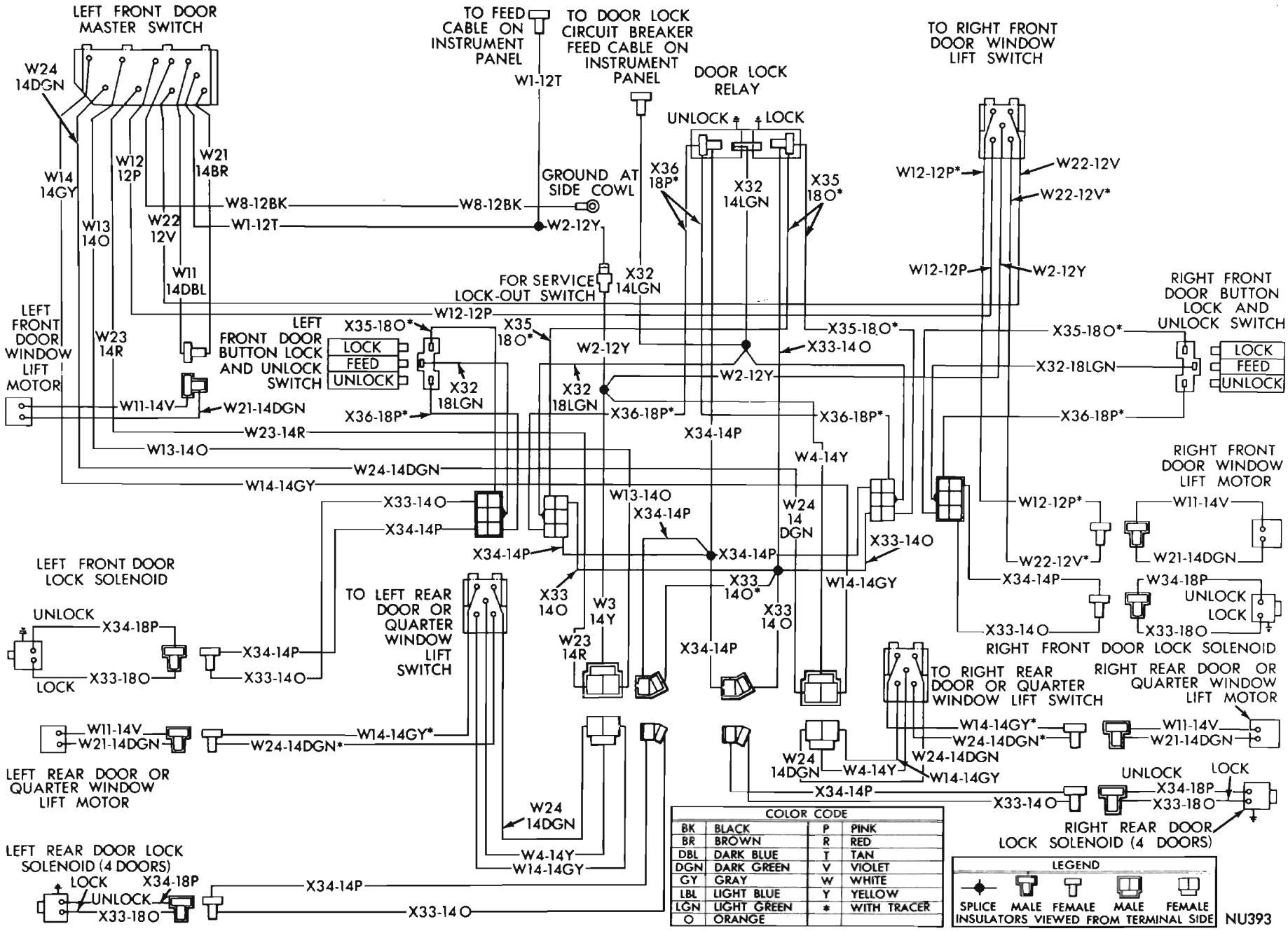

Fig. 9—Electric Window Lift and Electric Door Locks Wiring Diagram—Fury and VIP

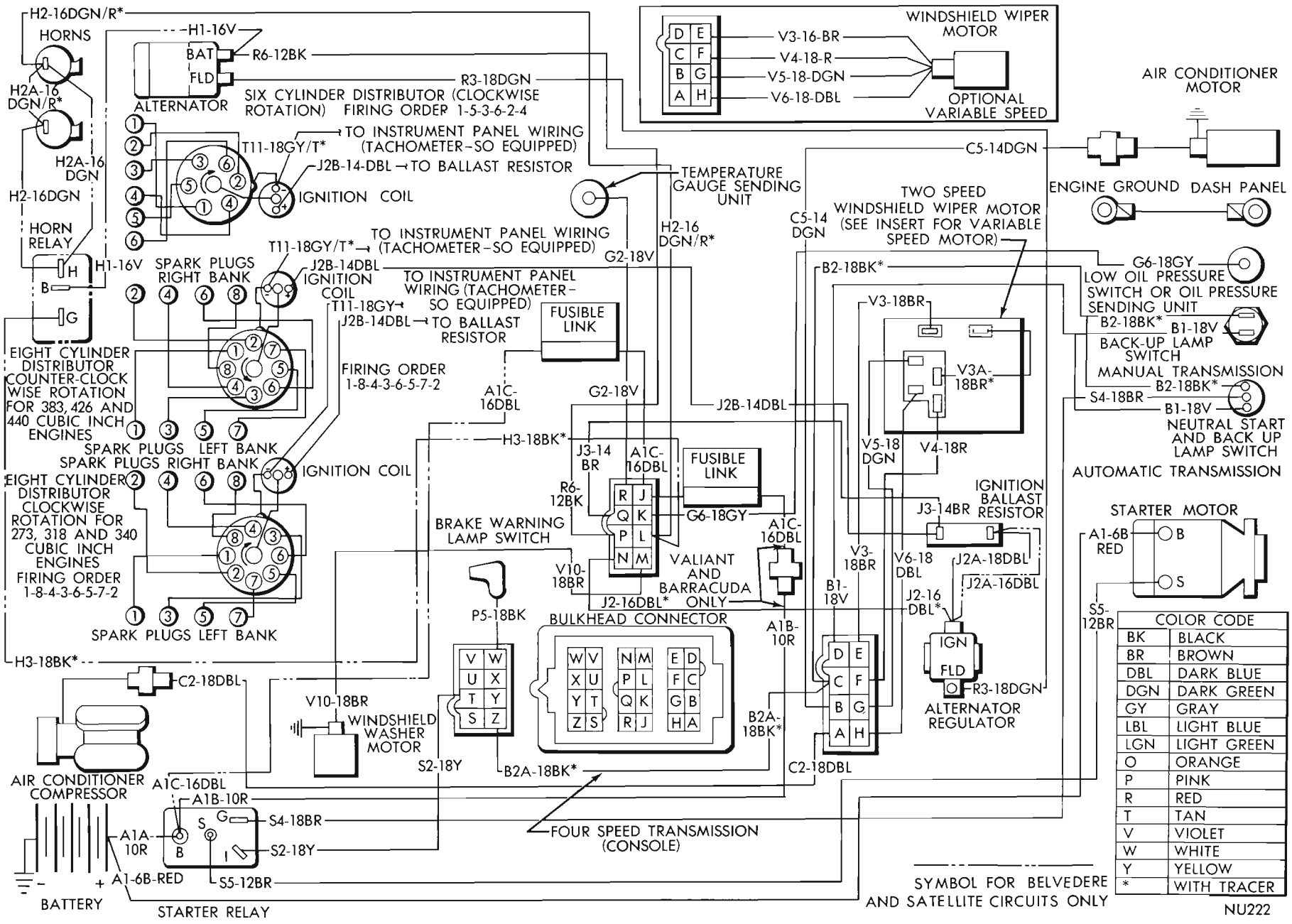

Fig. 10—Engine Compartment Wiring Diagram—Except Hemi Engines—Belvedere—Satellite

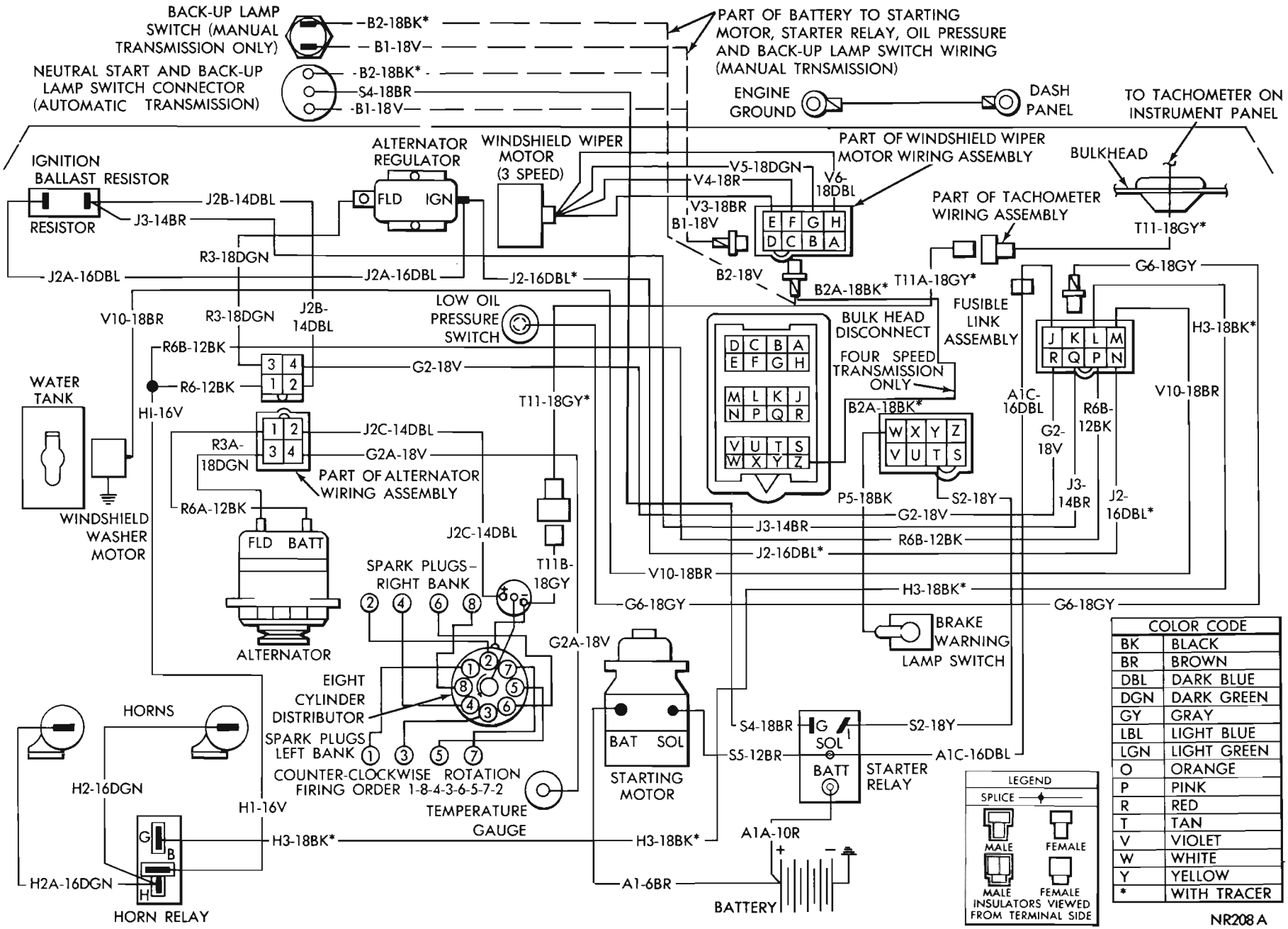

Fig. 11—Engine Compartment Wiring Diagram—Hemi Engines

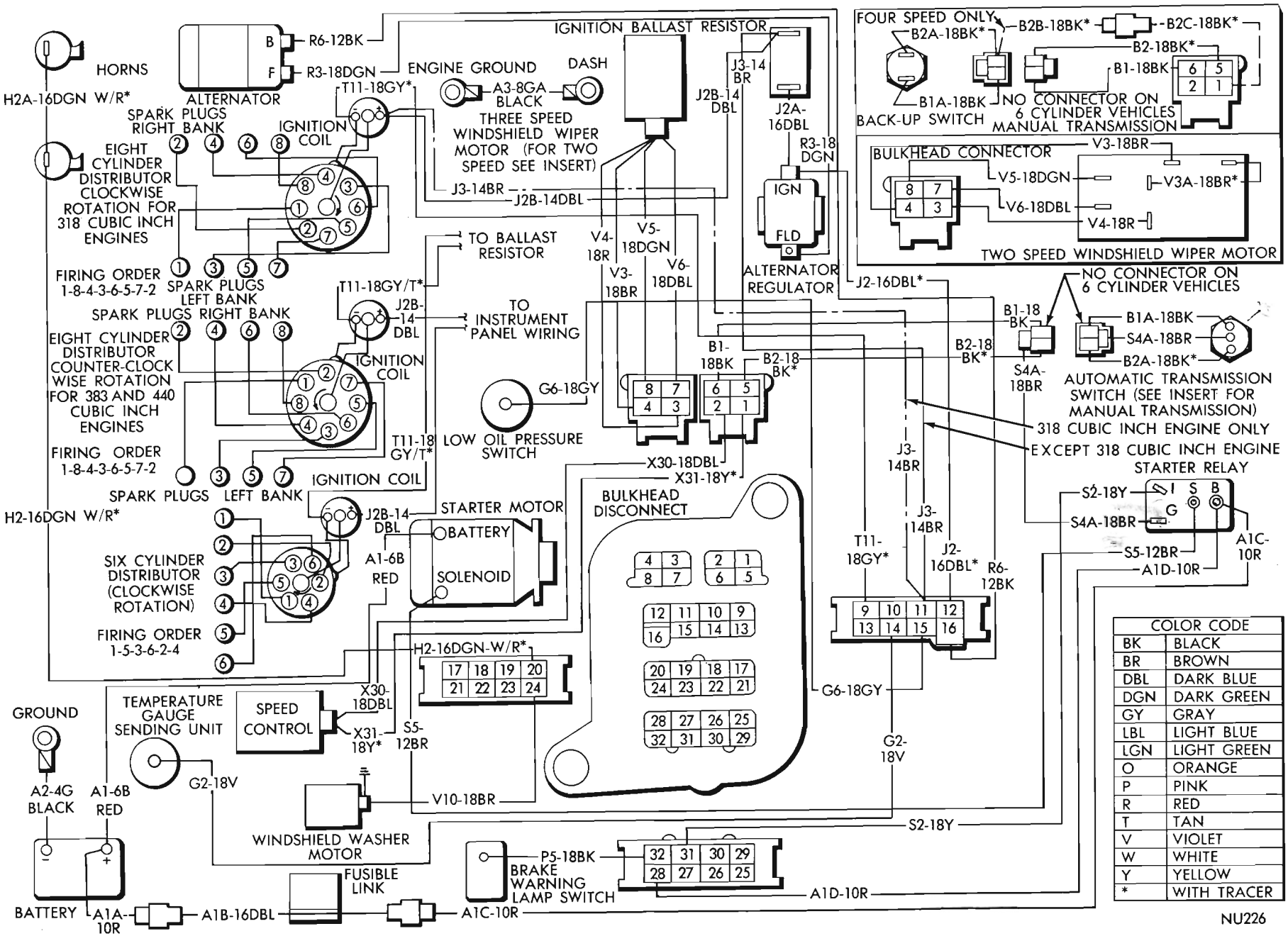

Fig. 12—Engine Compartment Wiring Diagram

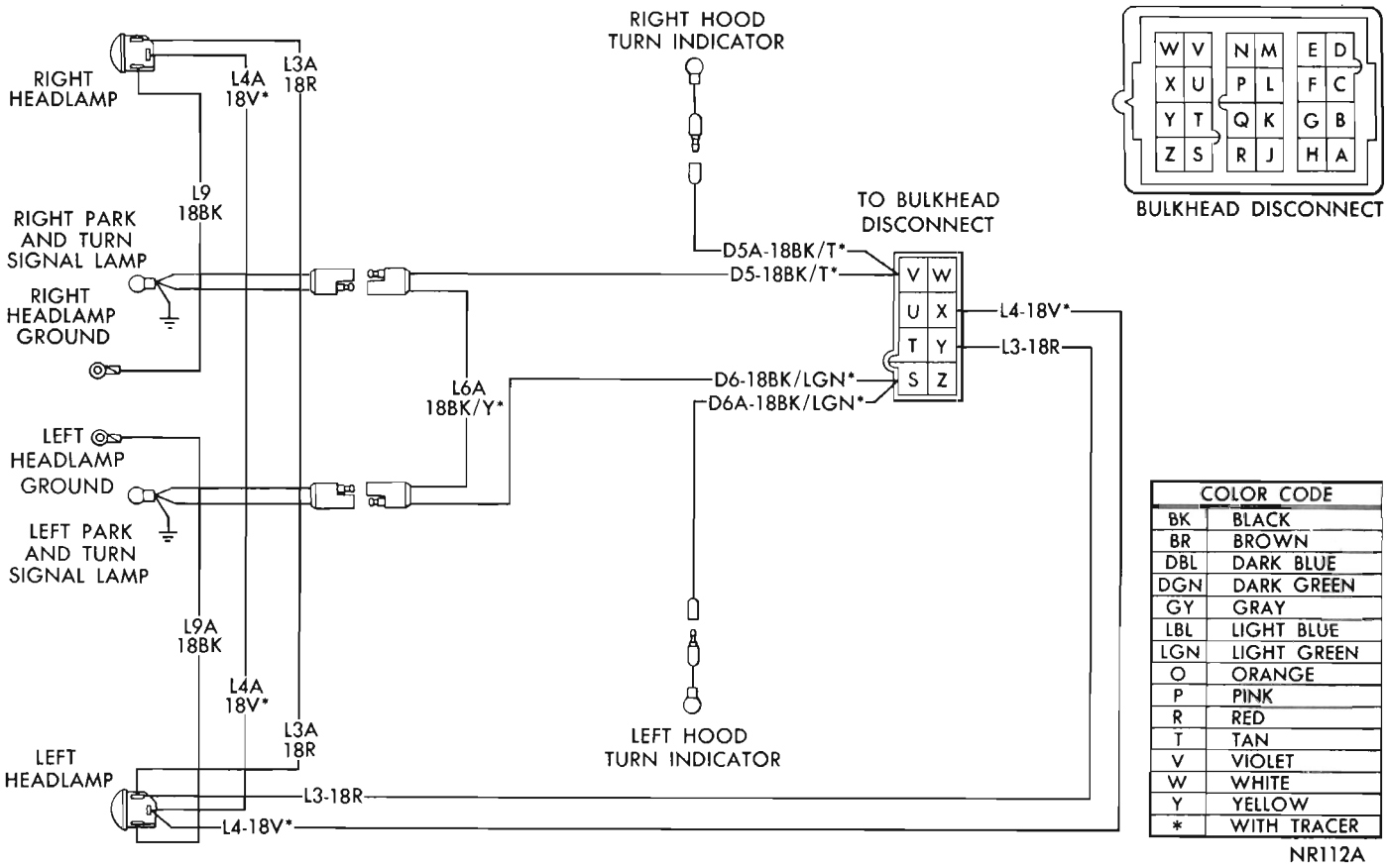

Fig. 13—Front End Lighting—Barracuda

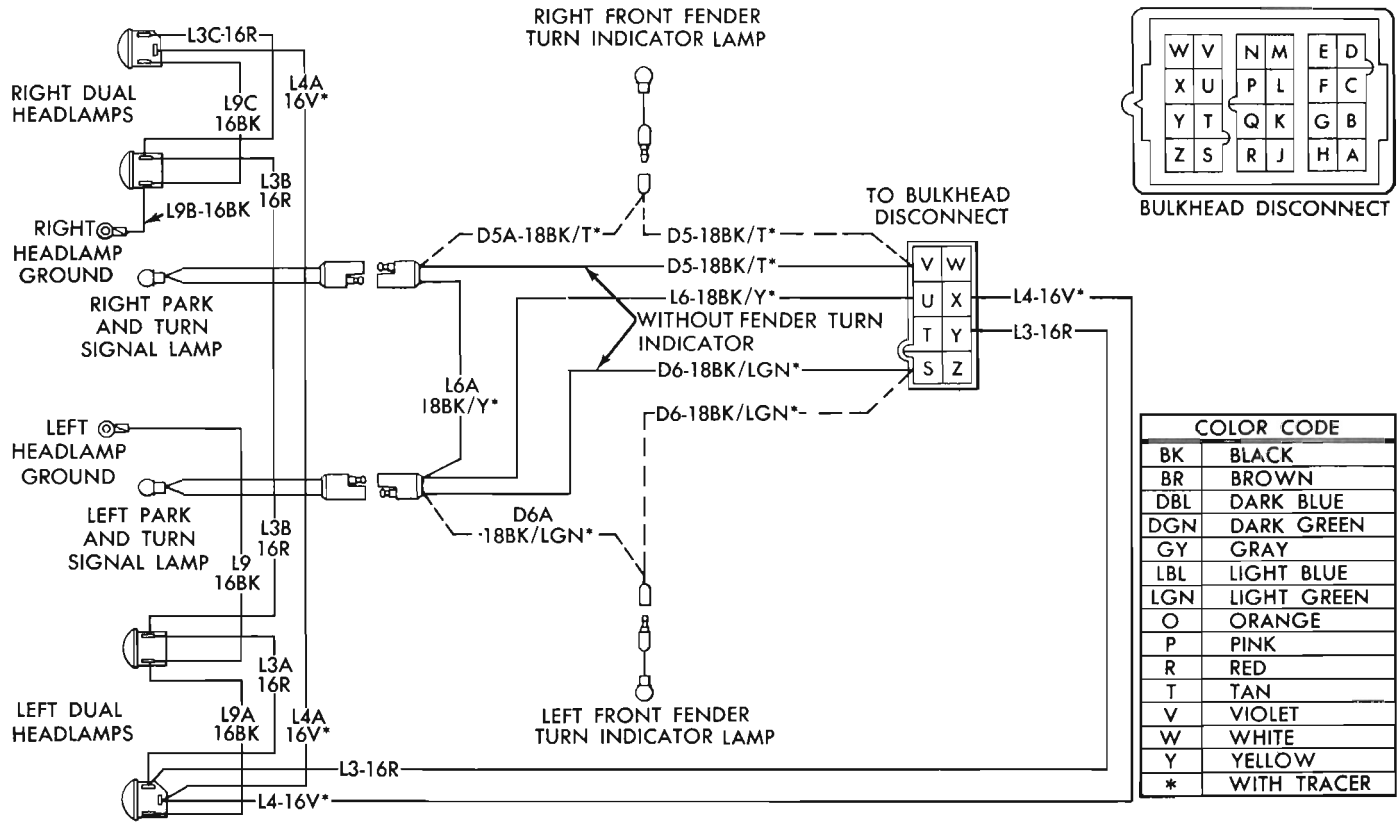

Fig. 14—Front End Lighting—Belvedere and Satellite

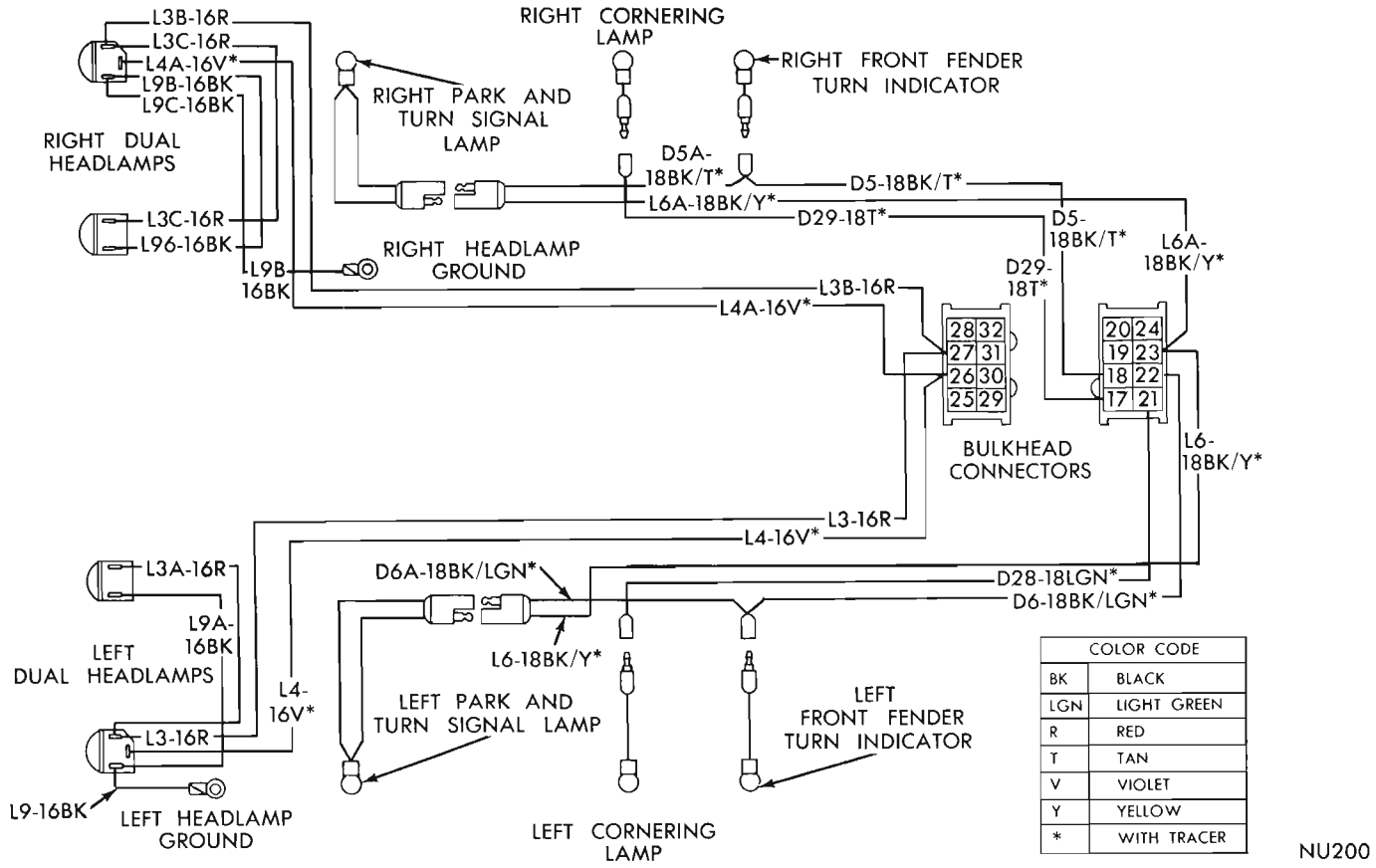

Fig. 15—Front End Lighting—Fury and VIP

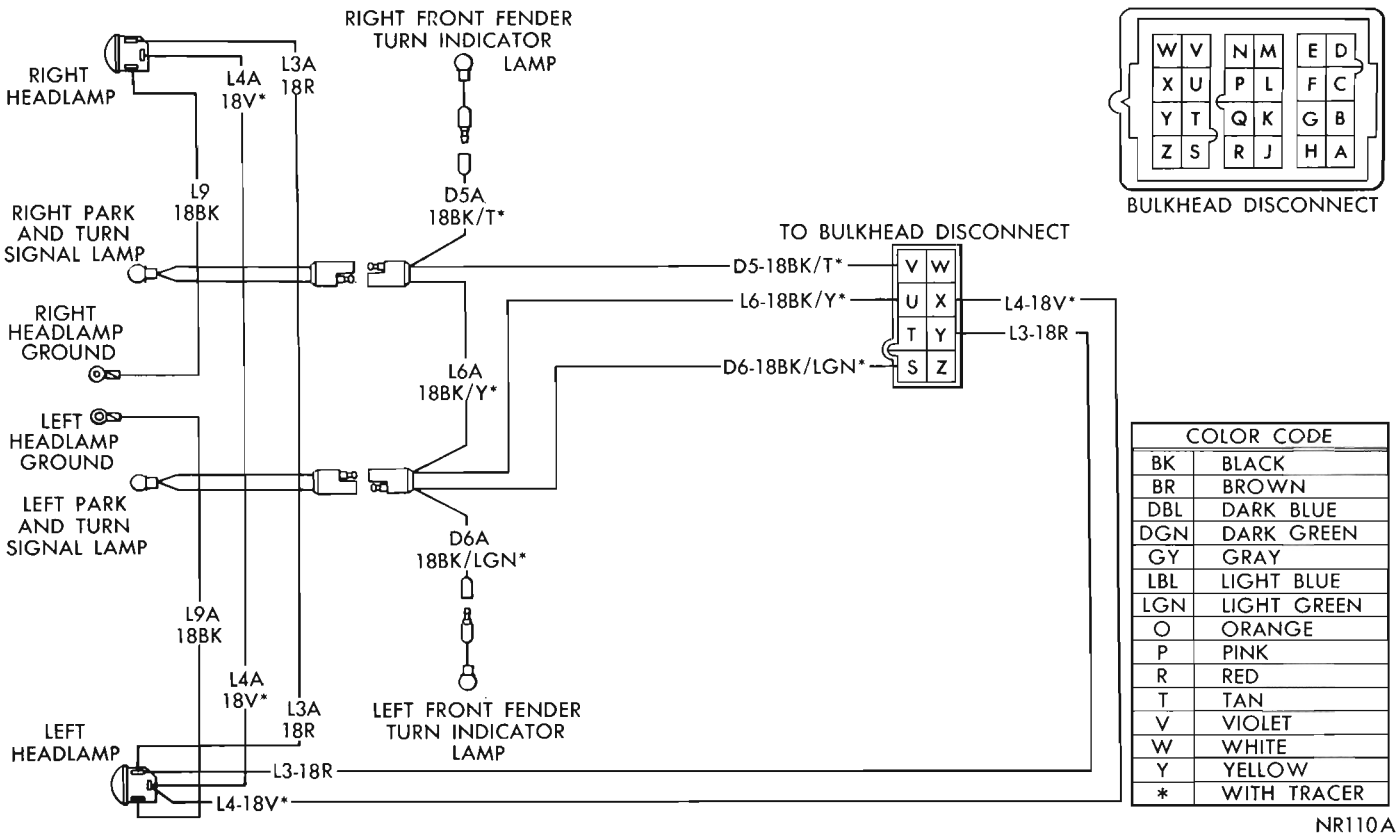

Fig. 16—Front End Lighting—Valiant

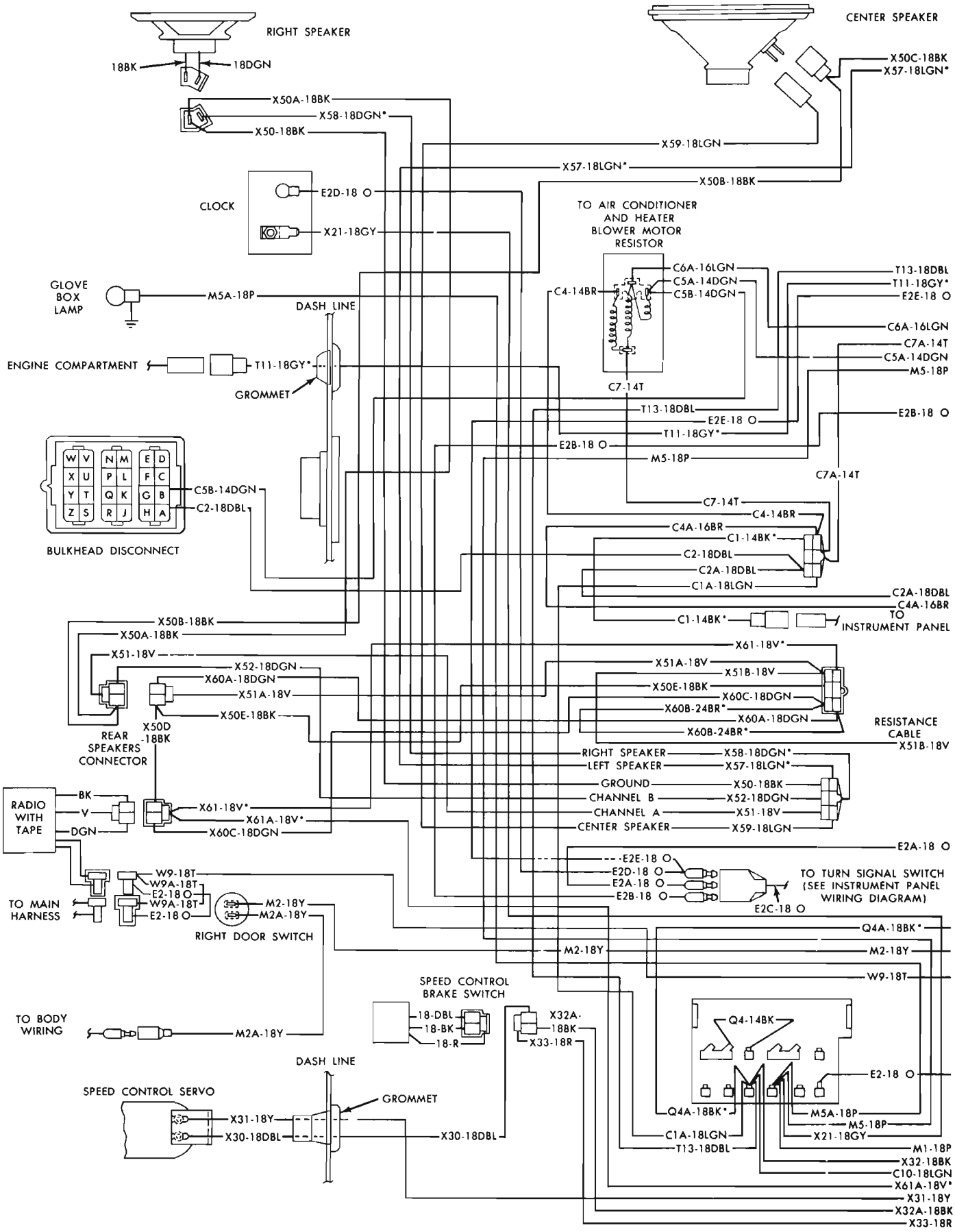
RIGHT SPEAKER
18BK
18DGN
CENTER SPEAKER
X50C-18BK
X57-18LGN*
X50A-18BK
X58-18DGN*
X50-18BK
X59-18LGN
X57-18LGN*
X50B-18BK
CLOCK
E2D-18 O
X21-18GY
TO AIR CONDITIONER AND HEATER BLOWER MOTOR RESISTOR
C6A-16LGN
C5A-14DGN
C5B-14DGN
C4-14BR
T13-18DBL
T11-18GY*
E2E-18 O
C6A-16LGN
C7A-14T
C5A-14DGN
M5-18P
C7-14T
GLOVE BOX LAMP
M5A-18P
DASH LINE
ENGINE COMPARTMENT
T11-18GY*
GROMMET
T13-18DBL
E2E-18 O
T11-18GY*
E2B-18 O
M5-18P
E2B-18 O
C7A-14T
C5B-14DGN
C2-18DBL
BULKHEAD DISCONNECT
C7-14T
C4-14BR
C4A-16BR
C1-14BK*
C2-18DBL
C2A-18DBL
C1A-18LGN
C2A-18DBL
C4A-16BR
C1-14BK*
TO INSTRUMENT PANEL
X50B-18BK
X50A-18BK
X51-18V
X52-18DGN
X60A-18DGN
X51A-18V
X50E-18BK
X61-18V*
X51A-18V
X51B-18V
X50E-18BK
X60C-18DGN
X60B-24BR*
X60A-18DGN
X60B-24BR*
RESISTANCE CABLE
X51B-18V
REAR SPEAKERS CONNECTOR
X50D-18BK
RIGHT SPEAKER
X58-18DGN*
LEFT SPEAKER
X57-18LGN*
GROUND
X50-18BK
CHANNEL B
X52-18DGN
CHANNEL A
X51-18V
CENTER SPEAKER
X59-18LGN
RADIO WITH TAPE
BK
V
DGN
X61-18V*
X61A-18V*
X60C-18DGN
E2A-18 O
E2E-18 O
E2D-18 O
E2A-18 O
E2B-18 O
E2C-18 O
TO TURN SIGNAL SWITCH (SEE INSTRUMENT PANEL WIRING DIAGRAM)
W9-18T
W9A-18T
E2-18 O
W9A-18T
E2-18 O
TO MAIN HARNESS
M2-18Y
M2A-18Y
RIGHT DOOR SWITCH
Q4A-18BK*
M2-18Y
M2-18Y
W9-18T
SPEED CONTROL BRAKE SWITCH
18-DBL
18-BK
18-R
X32A-18BK
X33-18R
Q4-14BK
TO BODY WIRING
M2A-18Y
E2-18 O
DASH LINE
SPEED CONTROL SERVO
GROMMET
X31-18Y
X30-18DBL
X30-18DBL
Q4A-18BK*
M5A-18P
M5-18P
C1A-18LGN
X21-18GY
T13-18DBL
M1-18P
X32-18BK
C10-18LGN
X61A-18V*
X31-18Y
X32A-18BK
X33-18R

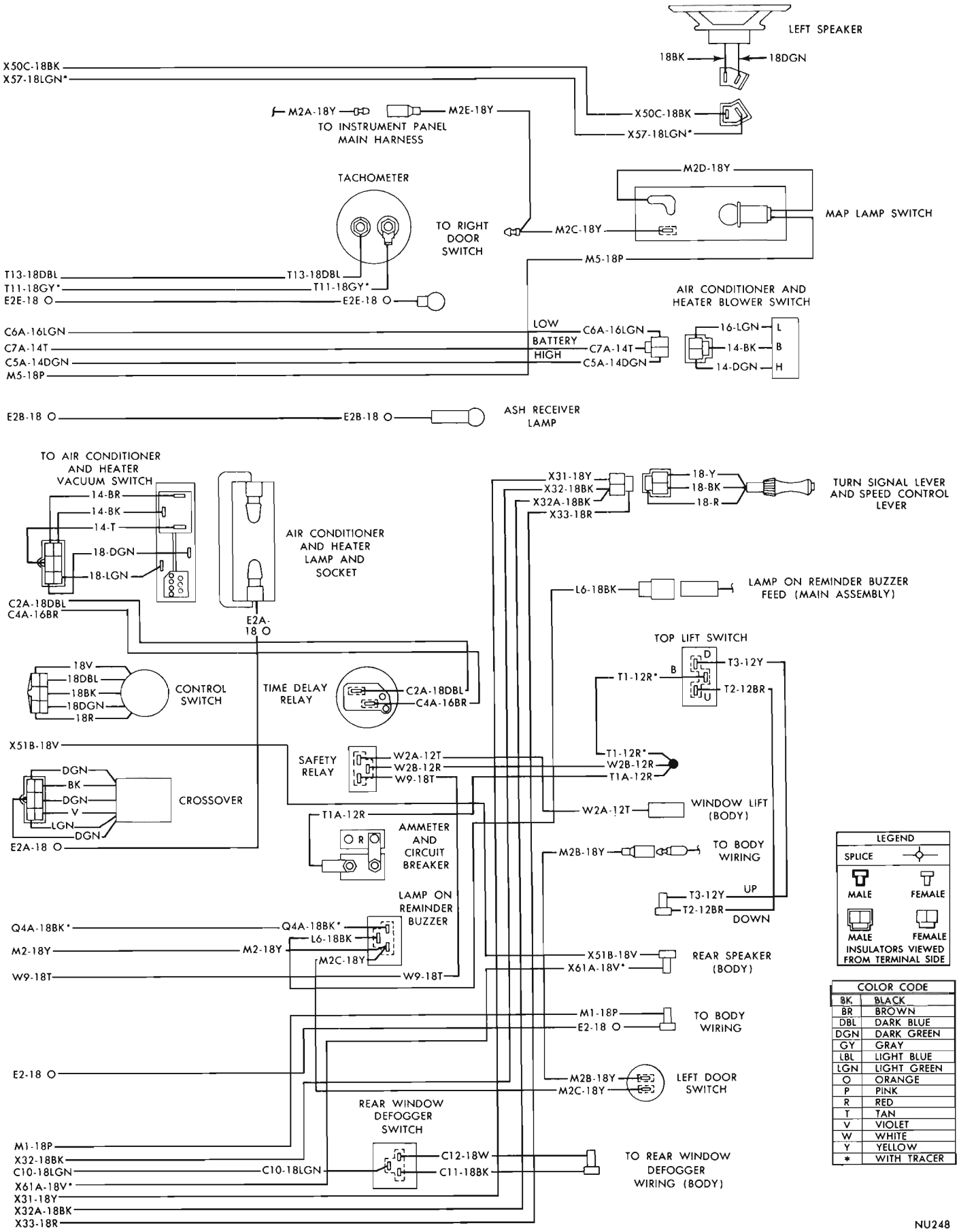

Fig. 17—Instrument Panel Accessory Wiring Diagram—Belvedere—Satellite

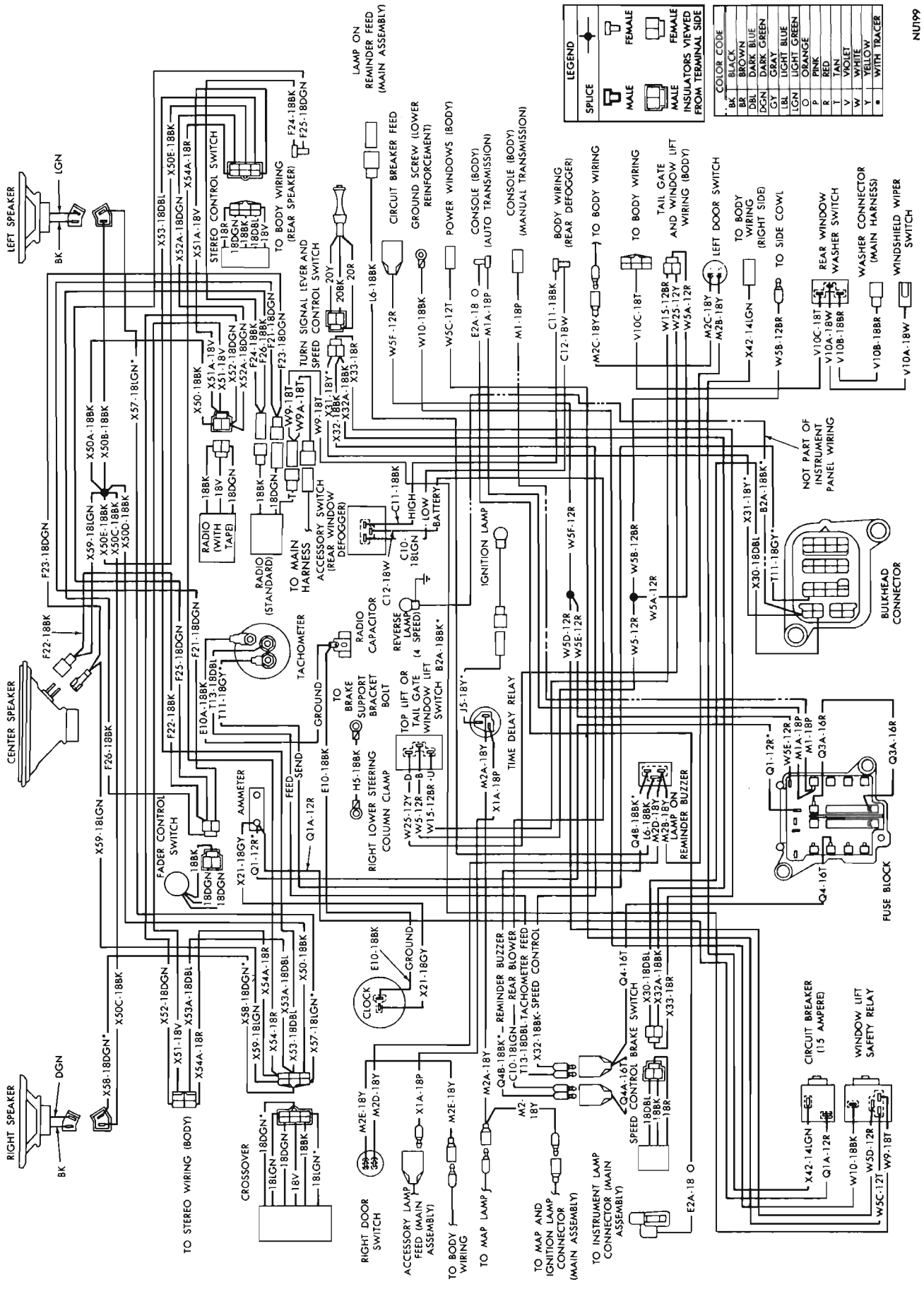

Fig. 18—Instrument Panel Accessory Wiring Diagram—Fury—VIP

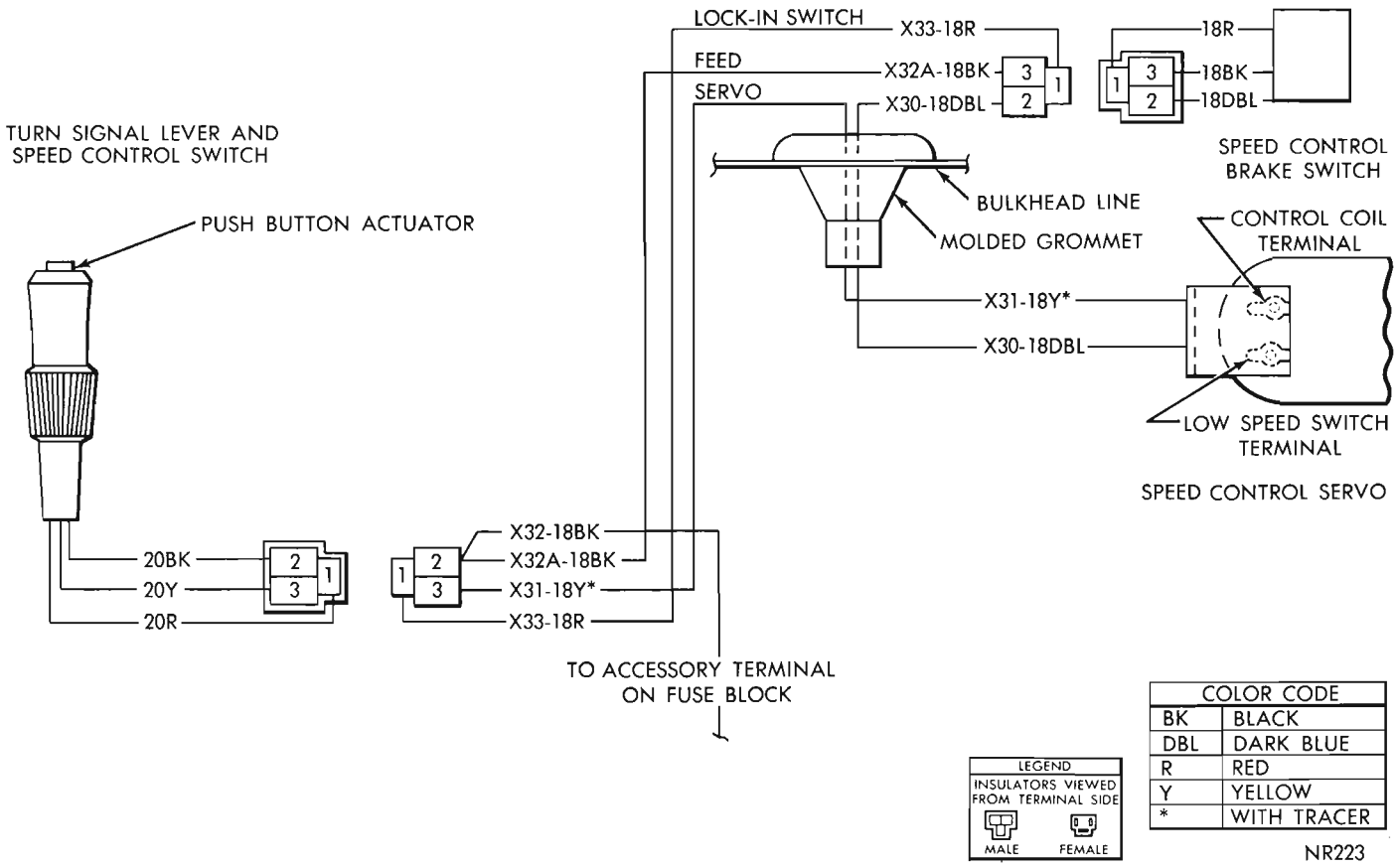

Fig. 18A—Speed Control Wiring Diagram

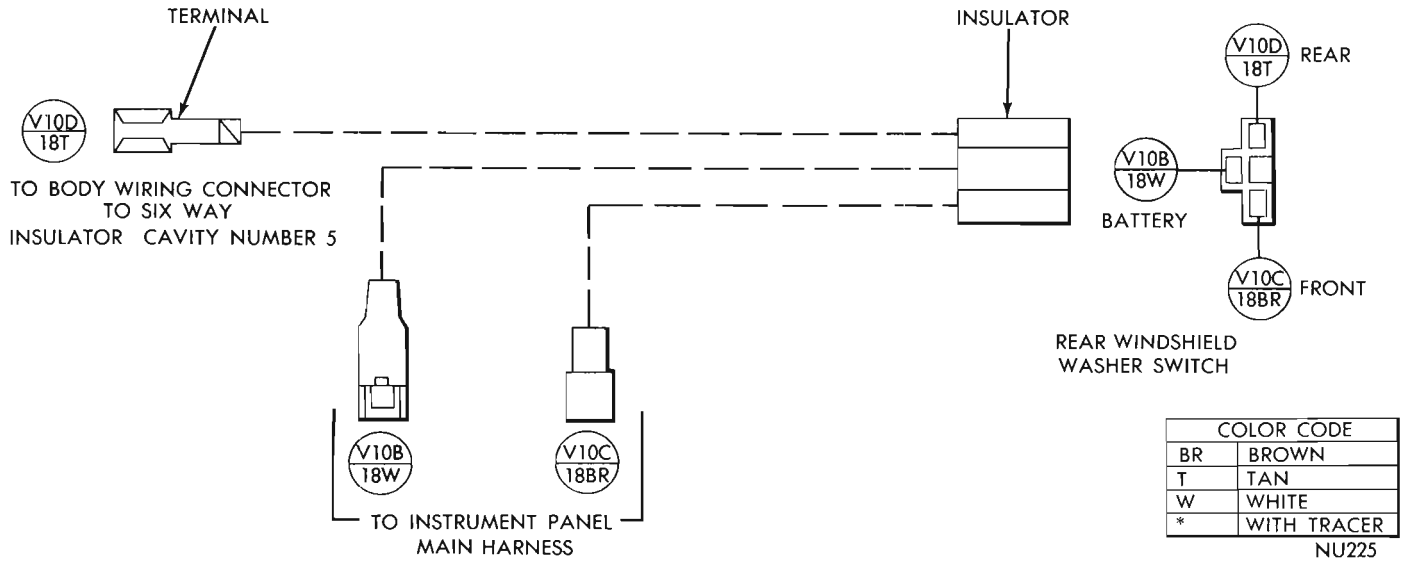

Fig. 18B —Tail Gate Window Washer Switch Wiring

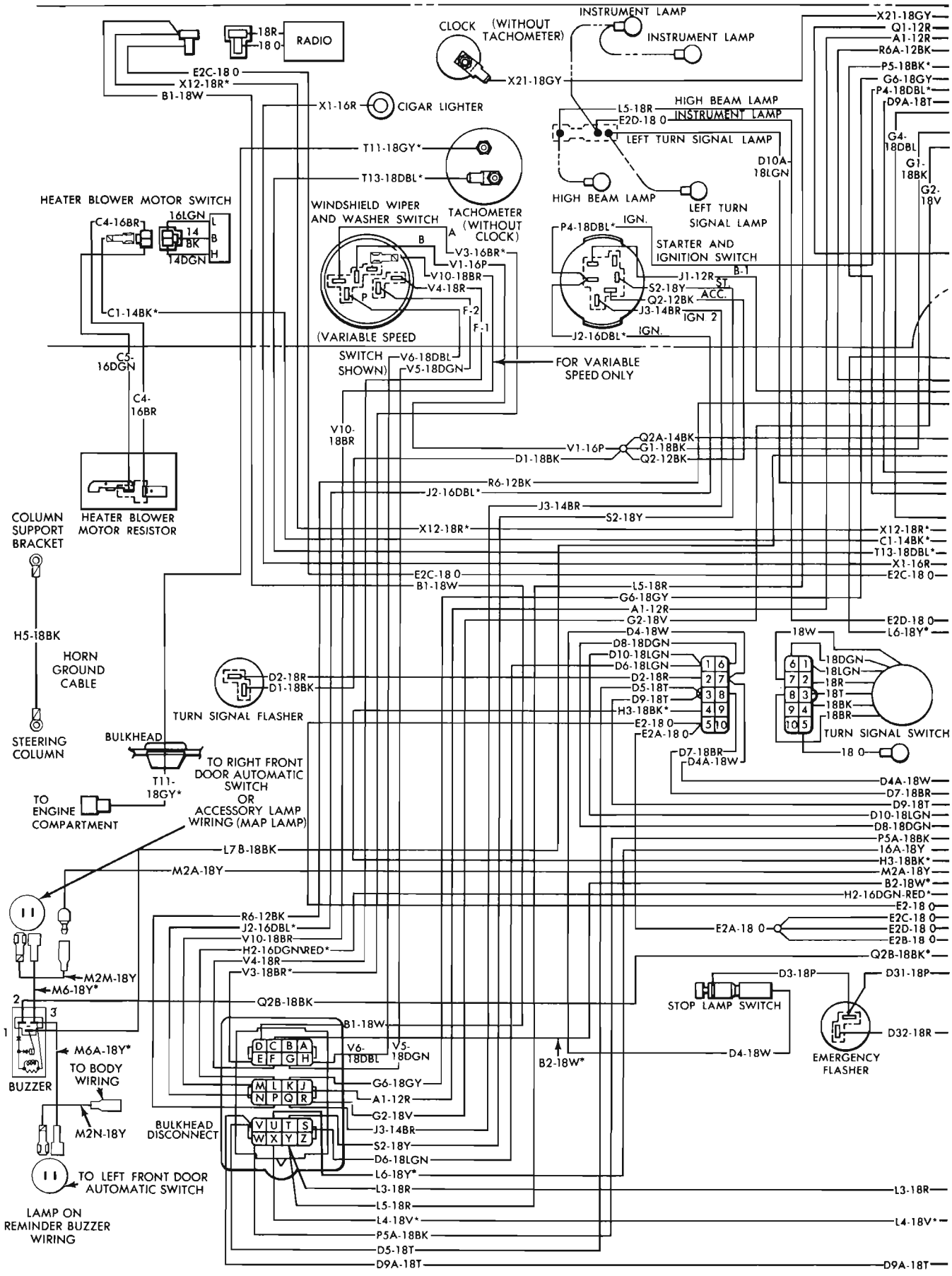
RADIO
18R
18 0
E2C-18 0
X12-18R*
B1-18W
CLOCK (WITHOUT TACHOMETER)
INSTRUMENT LAMP
INSTRUMENT LAMP
X21-18GY
X1-16R
CIGAR LIGHTER
L5-18R
HIGH BEAM LAMP
E2D-18 0
INSTRUMENT LAMP
LEFT TURN SIGNAL LAMP
T11-18GY*
T13-18DBL*
TACHOMETER (WITHOUT CLOCK)
HIGH BEAM LAMP
LEFT TURN SIGNAL LAMP
D10A-18LGN
G4-18DBL
G1-18BK
G2-18V
HEATER BLOWER MOTOR SWITCH
C4-16BR
16LGN
14 BK
14DGN
L
B
H
WINDSHIELD WIPER AND WASHER SWITCH
A
B
P
V3-16BR*
V1-16P
V10-18BR
V4-18R
F-2
F-1
P4-18DBL*
IGN.
STARTER AND IGNITION SWITCH
B-1
J1-12R
S2-18Y
ST.
Q2-12BK
ACC.
J3-14BR
IGN 2
J2-16DBL*
IGN.
C1-14BK*
(VARIABLE SPEED SWITCH SHOWN)
V6-18DBL
V5-18DGN
FOR VARIABLE SPEED ONLY
C5-16DGN
C4-16BR
V10-18BR
V1-16P
Q2A-14BK
G1-18BK
Q2-12BK
D1-18BK
R6-12BK
J2-16DBL*
J3-14BR
S2-18Y
X12-18R*
C1-14BK*
T13-18DBL*
X1-16R
E2C-18 0
COLUMN SUPPORT BRACKET
HEATER BLOWER MOTOR RESISTOR
E2C-18 0
B1-18W
L5-18R
G6-18GY
A1-12R
G2-18V
D4-18W
D8-18DGN
D10-18LGN
D6-18LGN
D2-18R
D5-18T
D9-18T
H3-18BK*
E2-18 0
E2A-18 0
E2D-18 0
L6-18Y*
18W
18DGN
18LGN
18R
18T
18BK
18BR
18 0
TURN SIGNAL SWITCH
H5-18BK
HORN GROUND CABLE
D2-18R
D1-18BK
TURN SIGNAL FLASHER
STEERING COLUMN
BULKHEAD
T11-18GY*
TO RIGHT FRONT DOOR AUTOMATIC SWITCH OR ACCESSORY LAMP WIRING (MAP LAMP)
TO ENGINE COMPARTMENT
D7-18BR
D4A-18W
D4A-18W
D7-18BR
D9-18T
D10-18LGN
D8-18DGN
P5A-18BK
16A-18Y
H3-18BK*
M2A-18Y
B2-18W*
H2-16DGN-RED*
E2-18 0
E2C-18 0
E2D-18 0
E2B-18 0
E2A-18 0
Q2B-18BK*
L7B-18BK
M2A-18Y
R6-12BK
J2-16DBL*
V10-18BR
H2-16DGN-RED*
V4-18R
V3-18BR*
M2M-18Y
M6-18Y*
Q2B-18BK
D3-18P
D31-18P
STOP LAMP SWITCH
D32-18R
EMERGENCY FLASHER
B1-18W
V6-18DBL
V5-18DGN
B2-18W*
D4-18W
M6A-18Y*
TO BODY WIRING
BUZZER
G6-18GY
A1-12R
G2-18V
J3-14BR
S2-18Y
D6-18LGN
L6-18Y*
L3-18R
L5-18R
L4-18V*
P5A-18BK
D5-18T
D9A-18T
M2N-18Y
BULKHEAD DISCONNECT
TO LEFT FRONT DOOR AUTOMATIC SWITCH
LAMP ON REMINDER BUZZER WIRING
L3-18R
L4-18V*
D9A-18T
X21-18GY
Q1-12R
A1-12R
R6A-12BK
P5-18BK*
G6-18GY
P4-18DBL*
D9A-18T

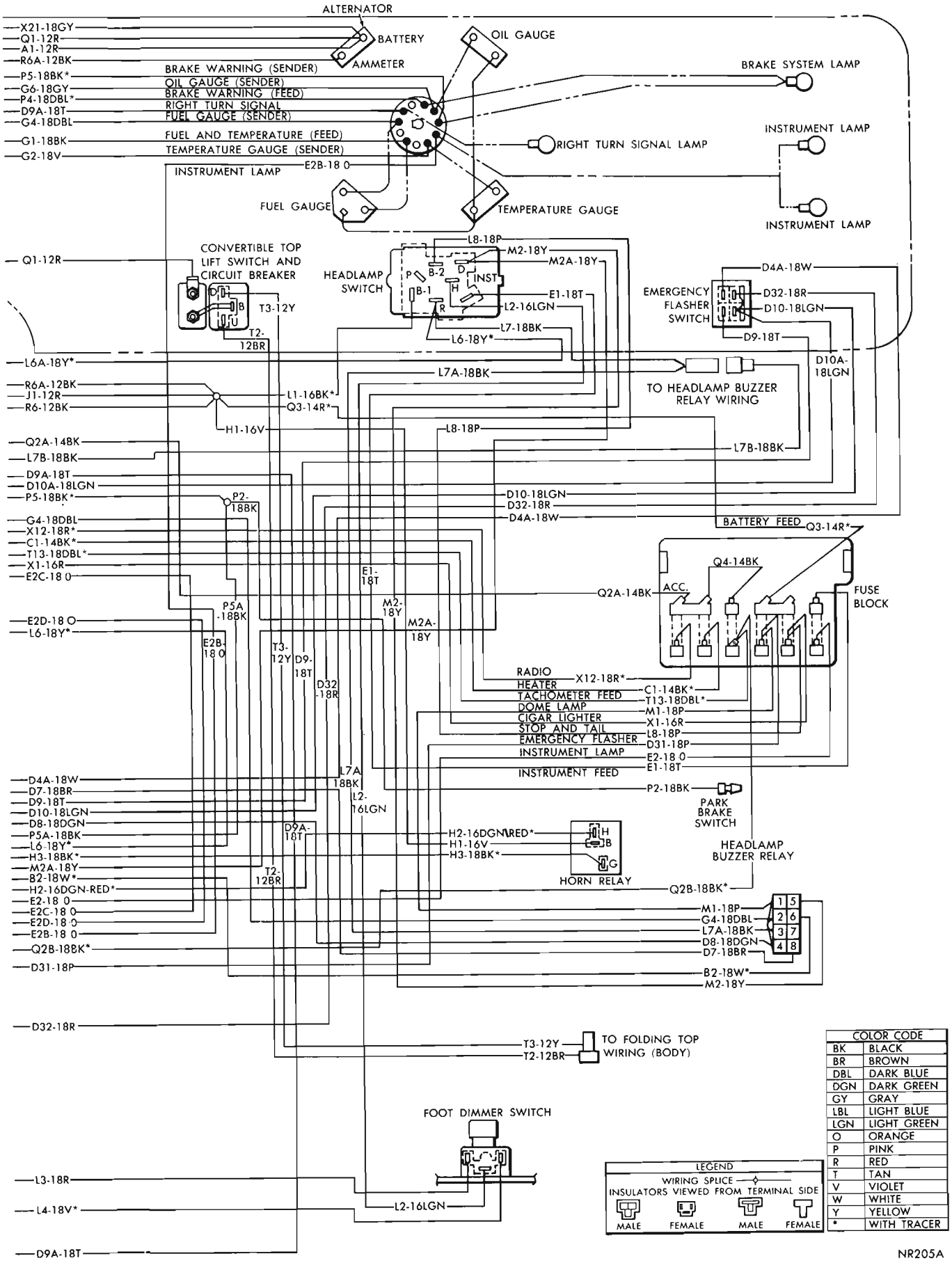

Fig. 19—Instrument Panel Wiring Diagram—Barracuda

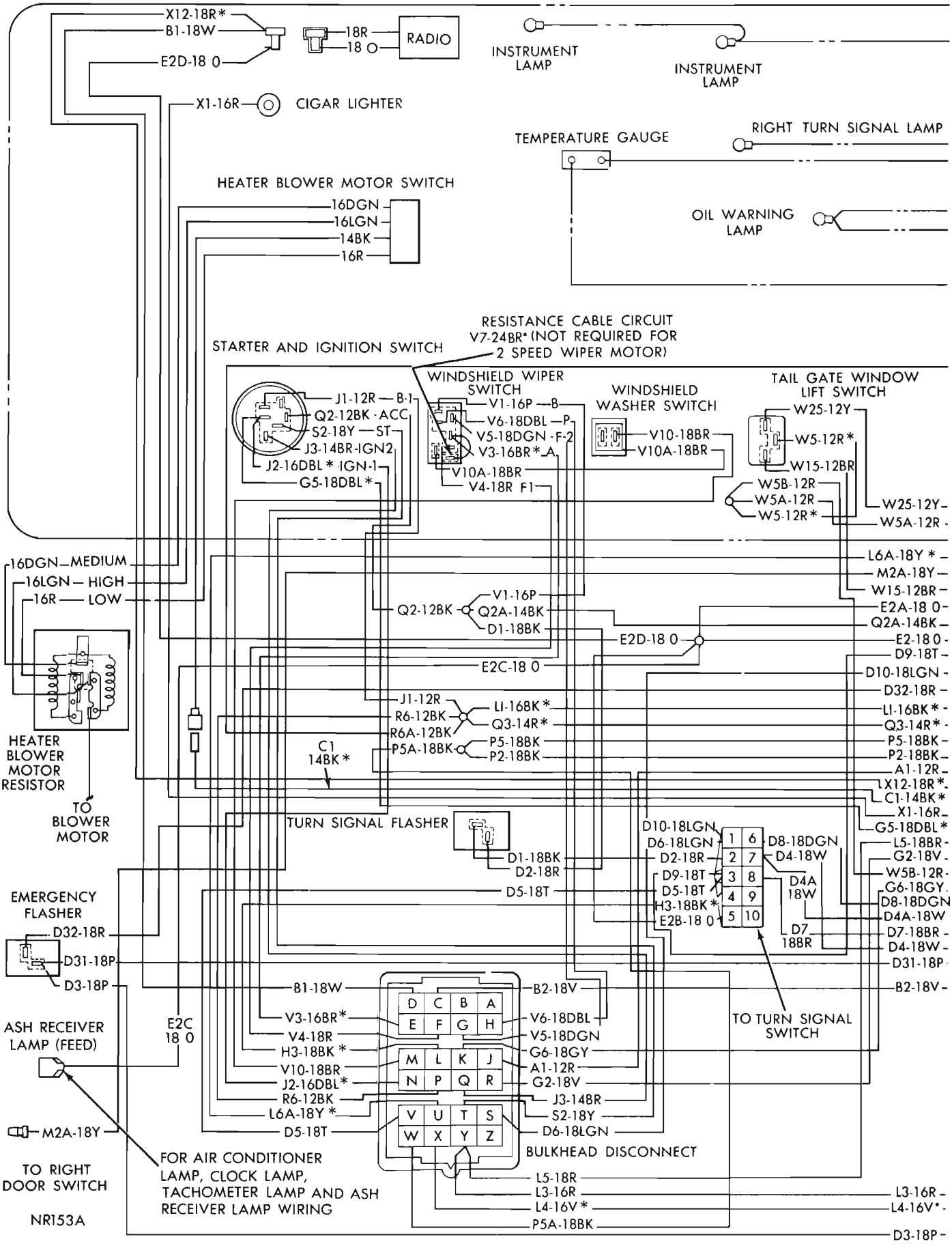
X12-18R*
B1-18W
E2D-18 0
18R
18 O
RADIO
INSTRUMENT LAMP
INSTRUMENT LAMP
X1-16R
CIGAR LIGHTER
TEMPERATURE GAUGE
RIGHT TURN SIGNAL LAMP
HEATER BLOWER MOTOR SWITCH
16DGN
16LGN
14BK
16R
OIL WARNING LAMP
RESISTANCE CABLE CIRCUIT V7-24BR* (NOT REQUIRED FOR 2 SPEED WIPER MOTOR)
STARTER AND IGNITION SWITCH
WINDSHIELD WIPER SWITCH
WINDSHIELD WASHER SWITCH
TAIL GATE WINDOW LIFT SWITCH
J1-12R — B-1
Q2-12BK - ACC
S2-18Y — ST
J3-14BR-IGN2
J2-16DBL* IGN-1
G5-18DBL*
V1-16P — B
V6-18DBL — P
V5-18DGN - F-2
V3-16BR* A
V10A-18BR
V4-18R F1
V10-18BR
V10A-18BR
W25-12Y
W5-12R*
W15-12BR
W5B-12R
W5A-12R
W5-12R*
W25-12Y
W5A-12R
16DGN — MEDIUM
16LGN — HIGH
16R — LOW
L6A-18Y*
M2A-18Y
W15-12BR
E2A-18 0
Q2A-14BK
E2-18 0
D9-18T
D10-18LGN
D32-18R
LI-16BK*
Q3-14R*
P5-18BK
P2-18BK
A1-12R
X12-18R*
C1-14BK*
X1-16R
G5-18DBL*
L5-18BR
G2-18V
W5B-12R
G6-18GY
D8-18DGN
D4A-18W
D7-18BR
D4-18W
D31-18P
B2-18V
Q2-12BK
V1-16P
Q2A-14BK
D1-18BK
E2D-18 0
E2C-18 0
J1-12R
R6-12BK
R6A-12BK
P5A-18BK
LI-16BK*
Q3-14R*
P5-18BK
P2-18BK
C1 14BK*
HEATER BLOWER MOTOR RESISTOR
TO BLOWER MOTOR
TURN SIGNAL FLASHER
D1-18BK
D2-18R
D5-18T
D10-18LGN
D6-18LGN
D2-18R
D9-18T
D5-18T
H3-18BK*
E2B-18 0
D8-18DGN
D4A 18W
D7 18BR
1 6
2 7
3 8
4 9
5 10
EMERGENCY FLASHER
D32-18R
D31-18P
D3-18P
B1-18W
B2-18V
V3-16BR*
V4-18R
H3-18BK*
V10-18BR
J2-16DBL*
R6-12BK
L6A-18Y*
D5-18T
V6-18DBL
V5-18DGN
G6-18GY
A1-12R
G2-18V
J3-14BR
S2-18Y
D6-18LGN
D C B A
E F G H
M L K J
N P Q R
V U T S
W X Y Z
BULKHEAD DISCONNECT
TO TURN SIGNAL SWITCH
ASH RECEIVER LAMP (FEED)
E2C 18 0
M2A-18Y
TO RIGHT DOOR SWITCH
FOR AIR CONDITIONER LAMP, CLOCK LAMP, TACHOMETER LAMP AND ASH RECEIVER LAMP WIRING
L5-18R
L3-16R
L4-16V*
P5A-18BK
L3-16R
L4-16V*
D3-18P
NR153A

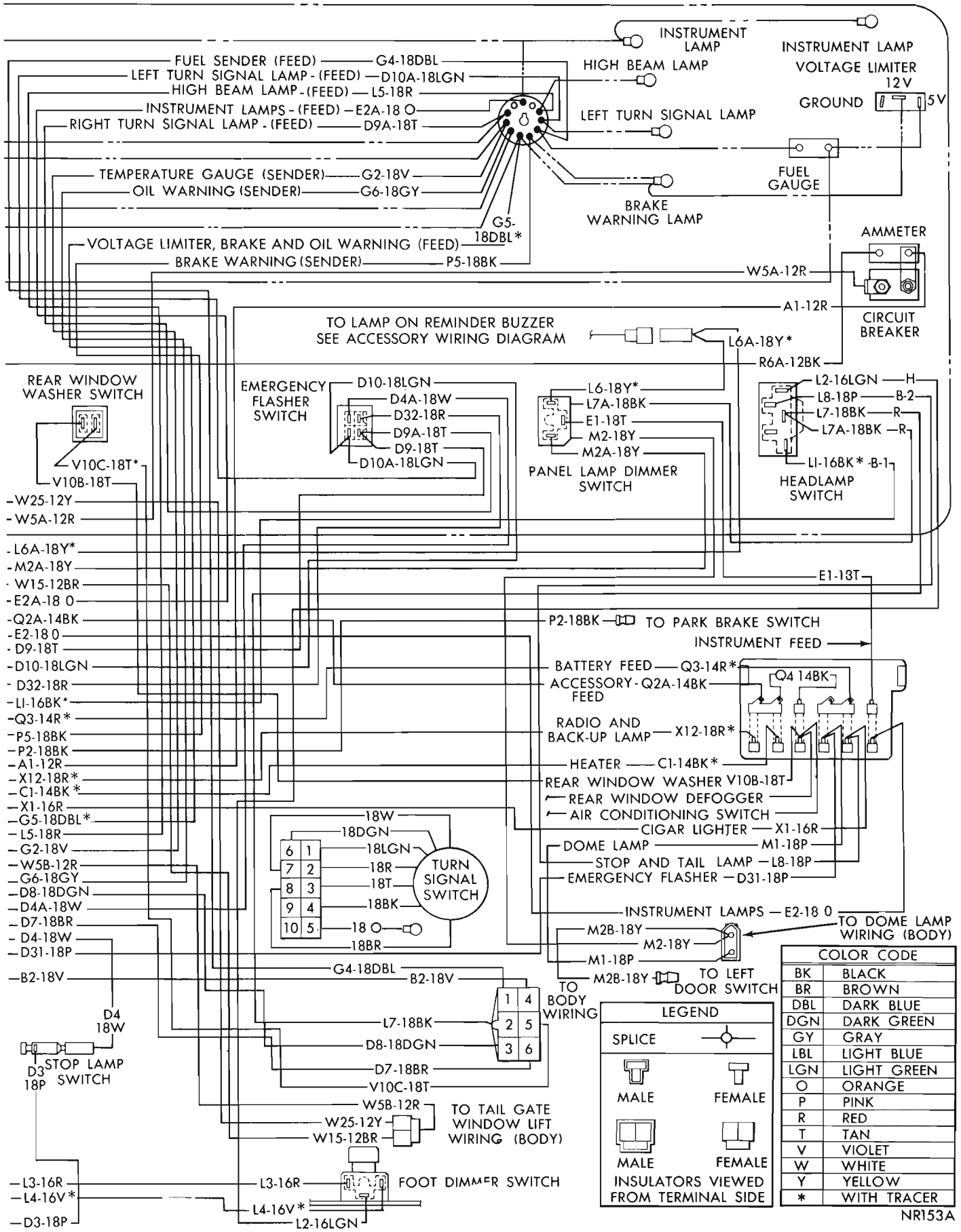

Fig. 20—Instrument Panel Wiring Diagram—Belvedere—Satellite

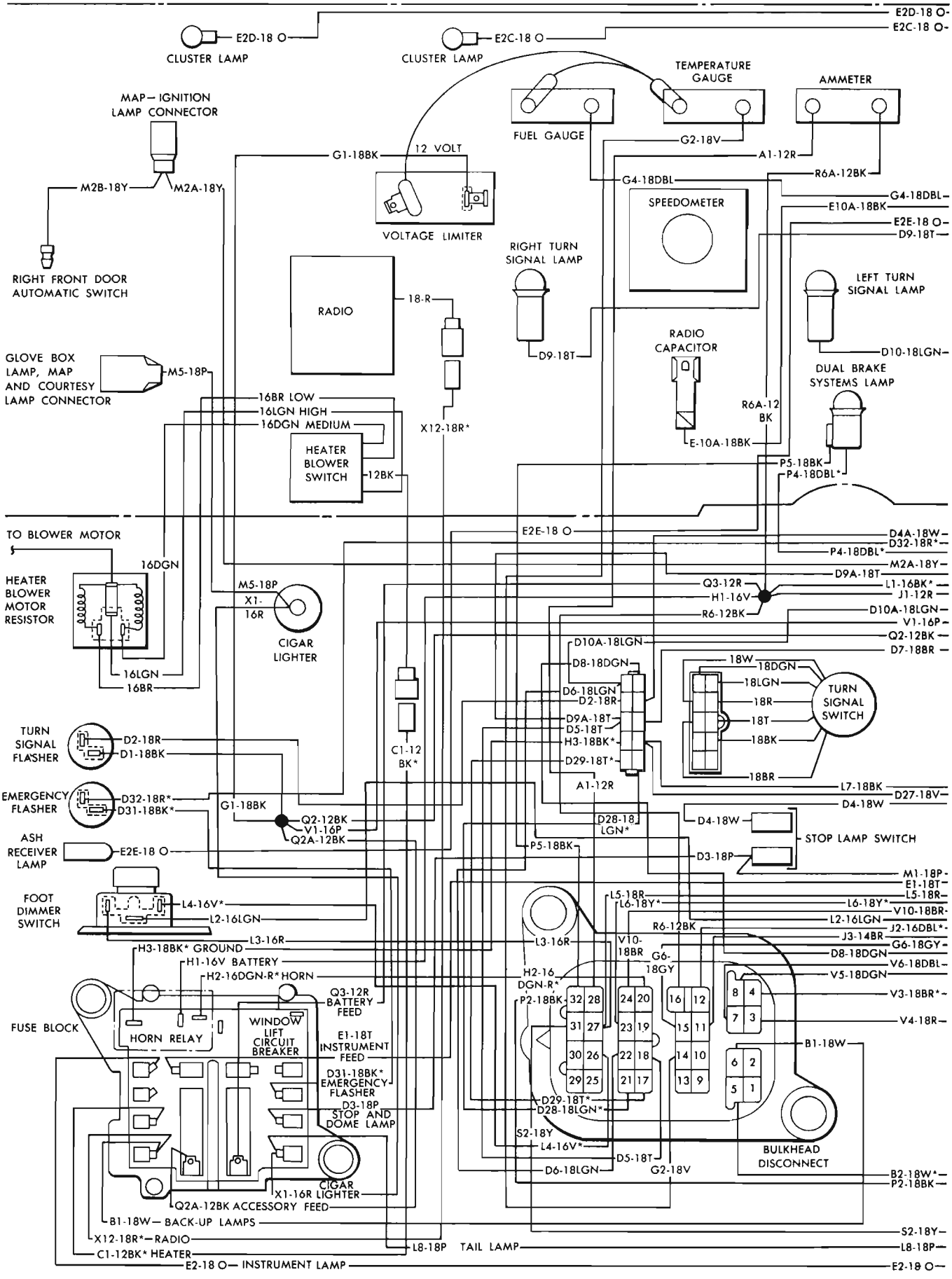
E2D-18 O
E2C-18 O
CLUSTER LAMP
CLUSTER LAMP
TEMPERATURE GAUGE
AMMETER
MAP—IGNITION LAMP CONNECTOR
FUEL GAUGE
G2-18V
A1-12R
R6A-12BK
G1-18BK
12 VOLT
G4-18DBL
M2B-18Y
M2A-18Y
SPEEDOMETER
G4-18DBL
E10A-18BK
E2E-18 O
D9-18T
VOLTAGE LIMITER
RIGHT FRONT DOOR AUTOMATIC SWITCH
RIGHT TURN SIGNAL LAMP
LEFT TURN SIGNAL LAMP
RADIO
18-R
RADIO CAPACITOR
D10-18LGN
GLOVE BOX LAMP, MAP AND COURTESY LAMP CONNECTOR
M5-18P
DUAL BRAKE SYSTEMS LAMP
16BR LOW
16LGN HIGH
16DGN MEDIUM
R6A-12 BK
X12-18R*
HEATER BLOWER SWITCH
12BK
E-10A-18BK
P5-18BK
P4-18DBL*
TO BLOWER MOTOR
E2E-18 O
D4A-18W
D32-18R*
P4-18DBL*
M2A-18Y
16DGN
HEATER BLOWER MOTOR RESISTOR
M5-18P
X1-16R
CIGAR LIGHTER
D9A-18T
Q3-12R
L1-16BK*
H1-16V
J1-12R
R6-12BK
D10A-18LGN
V1-16P
Q2-12BK
D7-18BR
D10A-18LGN
D8-18DGN
18W
18DGN
18LGN
18R
18T
18BK
18BR
TURN SIGNAL SWITCH
D6-18LGN
D2-18R
D9A-18T
D5-18T
H3-18BK*
D29-18T*
A1-12R
16LGN
16BR
C1-12 BK*
TURN SIGNAL FLASHER
D2-18R
D1-18BK
L7-18BK
D27-18V
D4-18W
EMERGENCY FLASHER
D32-18R*
D31-18BK*
G1-18BK
Q2-12BK
V1-16P
Q2A-12BK
D28-18 LGN*
D4-18W
STOP LAMP SWITCH
ASH RECEIVER LAMP
E2E-18 O
P5-18BK
D3-18P
M1-18P
E1-18T
FOOT DIMMER SWITCH
L4-16V*
L2-16LGN
L5-18R
L6-18Y*
L5-18R
V10-18BR
L2-16LGN
R6-12BK
J2-16DBL*
J3-14BR
L3-16R
L3-16R
V10-18BR
G6-18GY
G6-18BGY
H3-18BK* GROUND
H1-16V BATTERY
H2-16DGN-R* HORN
H2-16 DGN-R*
P2-18BK
D8-18DGN
V6-18DBL
V5-18DGN
V3-18BR*
Q3-12R BATTERY FEED
V4-18R
FUSE BLOCK
HORN RELAY
WINDOW LIFT CIRCUIT BREAKER
E1-18T INSTRUMENT FEED
B1-18W
D31-18BK* EMERGENCY FLASHER
D3-18P STOP AND DOME LAMP
D29-18T*
D28-18LGN*
S2-18Y
L4-16V*
D5-18T
D6-18LGN
G2-18V
BULKHEAD DISCONNECT
B2-18W*
P2-18BK
CIGAR LIGHTER
X1-16R LIGHTER
Q2A-12BK ACCESSORY FEED
B1-18W—BACK-UP LAMPS
S2-18Y
X12-18R*—RADIO
L8-18P TAIL LAMP
L8-18P
C1-12BK* HEATER
E2-18 O— INSTRUMENT LAMP
E2-18 O

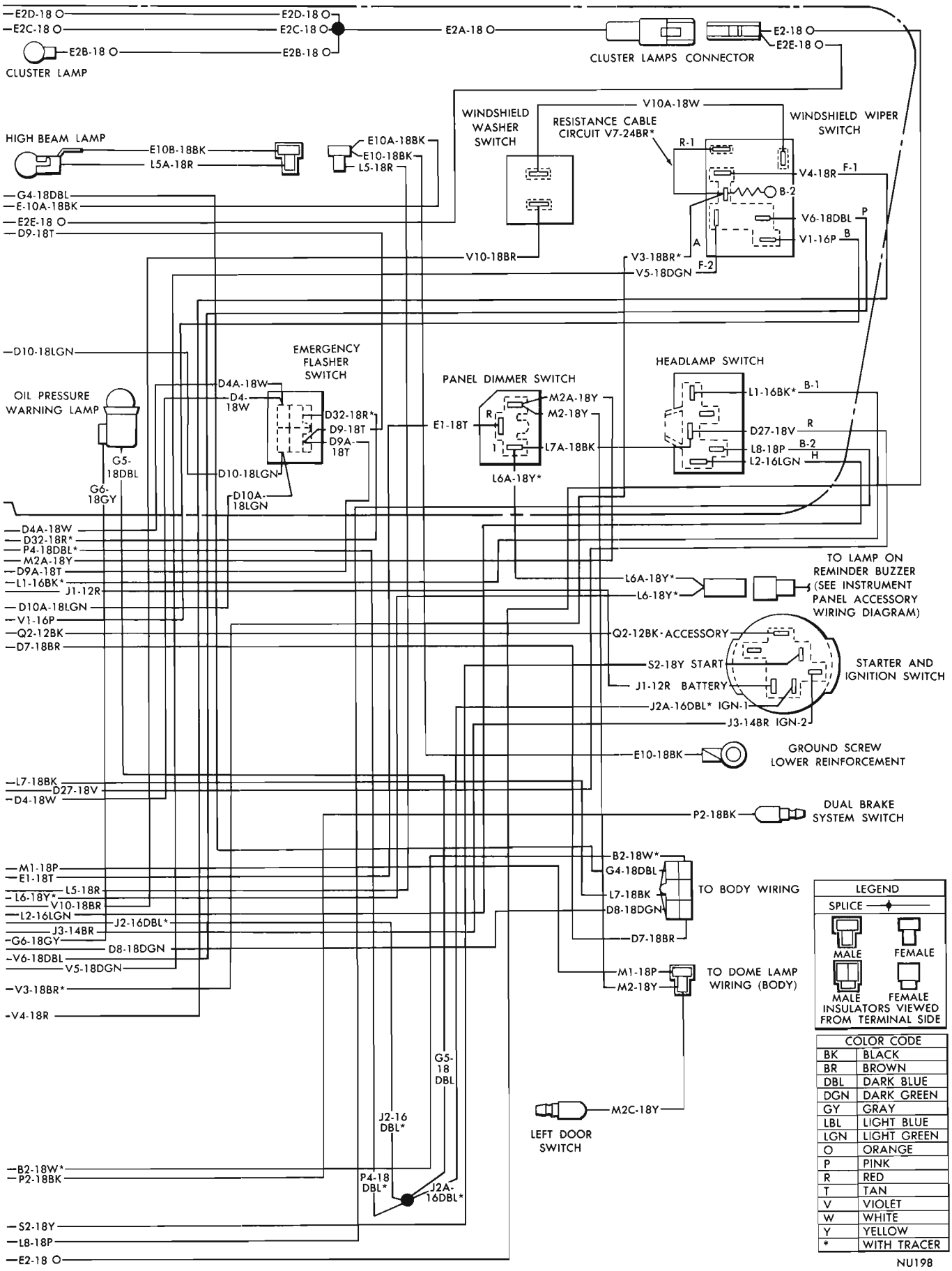

Fig. 21—Instrument Panel Wiring Diagram—Fury—VIP

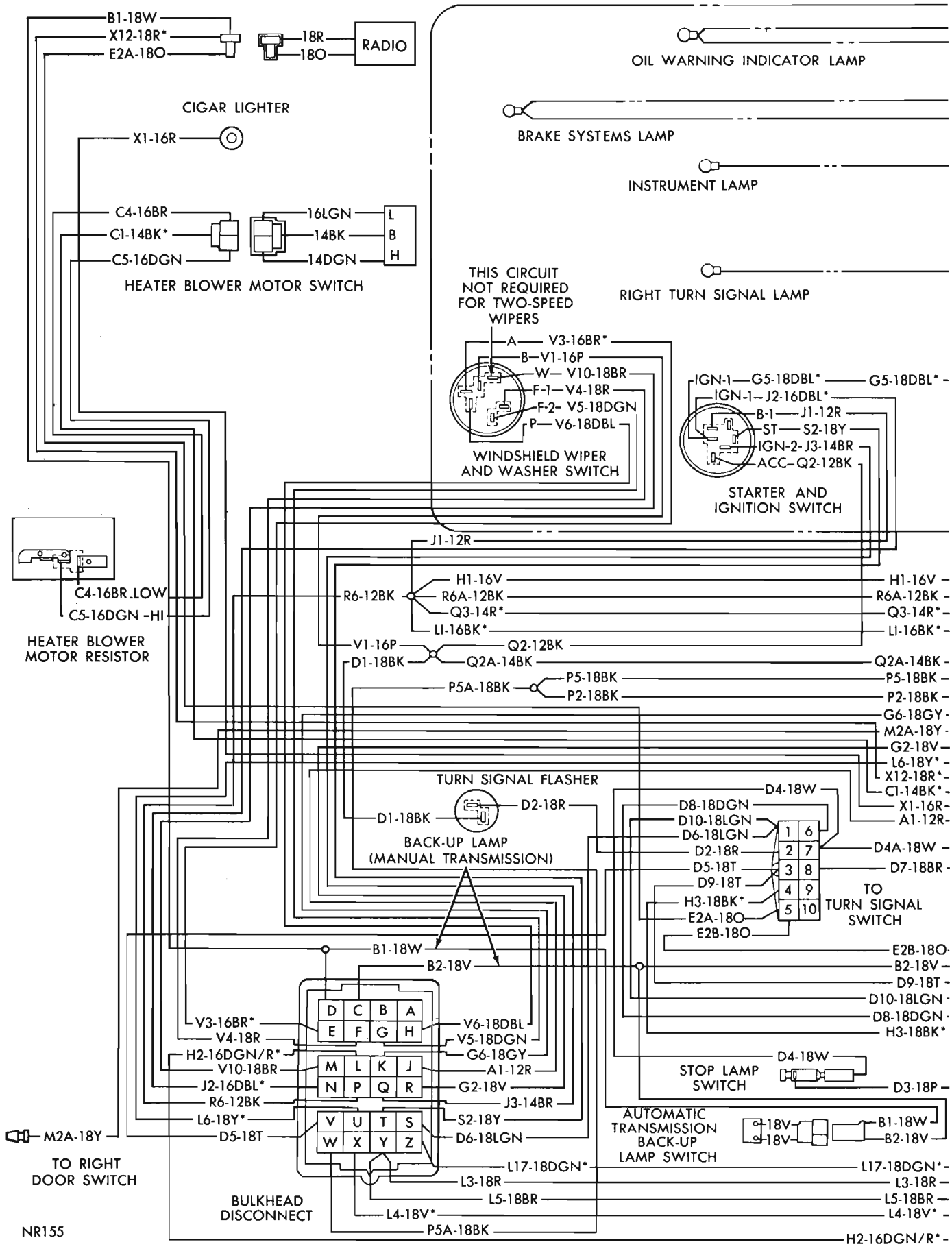
B1-18W
X12-18R*
E2A-18O
18R
18O
RADIO
CIGAR LIGHTER
X1-16R
OIL WARNING INDICATOR LAMP
BRAKE SYSTEMS LAMP
INSTRUMENT LAMP
C4-16BR
C1-14BK*
C5-16DGN
16LGN
14BK
14DGN
L
B
H
HEATER BLOWER MOTOR SWITCH
THIS CIRCUIT NOT REQUIRED FOR TWO-SPEED WIPERS
RIGHT TURN SIGNAL LAMP
A— V3-16BR*
B—V1-16P
W— V10-18BR
F-1—V4-18R
F-2- V5-18DGN
P—V6-18DBL
WINDSHIELD WIPER AND WASHER SWITCH
IGN-1—G5-18DBL*
IGN-1—J2-16DBL*
B-1—J1-12R
ST—S2-18Y
IGN-2-J3-14BR
ACC—Q2-12BK
STARTER AND IGNITION SWITCH
J1-12R
C4-16BR-LOW
C5-16DGN -HI
HEATER BLOWER MOTOR RESISTOR
H1-16V
R6-12BK
R6A-12BK
Q3-14R*
LI-16BK*
V1-16P
Q2-12BK
D1-18BK
Q2A-14BK
P5-18BK
P5A-18BK
P2-18BK
G6-18GY
M2A-18Y
G2-18V
L6-18Y*
X12-18R*
C1-14BK*
X1-16R
A1-12R
TURN SIGNAL FLASHER
D2-18R
D1-18BK
BACK-UP LAMP (MANUAL TRANSMISSION)
D4-18W
D8-18DGN
D10-18LGN
D6-18LGN
D2-18R
D5-18T
D9-18T
H3-18BK*
E2A-18O
E2B-18O
D4A-18W
D7-18BR
TO TURN SIGNAL SWITCH
B1-18W
B2-18V
D9-18T
D10-18LGN
D8-18DGN
H3-18BK*
V3-16BR*
V4-18R
H2-16DGN/R*
V10-18BR
J2-16DBL*
R6-12BK
L6-18Y*
D5-18T
V6-18DBL
V5-18DGN
G6-18GY
A1-12R
G2-18V
J3-14BR
S2-18Y
D6-18LGN
D4-18W
STOP LAMP SWITCH
D3-18P
AUTOMATIC TRANSMISSION BACK-UP LAMP SWITCH
18V
18V
B1-18W
B2-18V
M2A-18Y
TO RIGHT DOOR SWITCH
L17-18DGN*
L3-18R
L5-18BR
L4-18V*
P5A-18BK
H2-16DGN/R*
BULKHEAD DISCONNECT
NR155

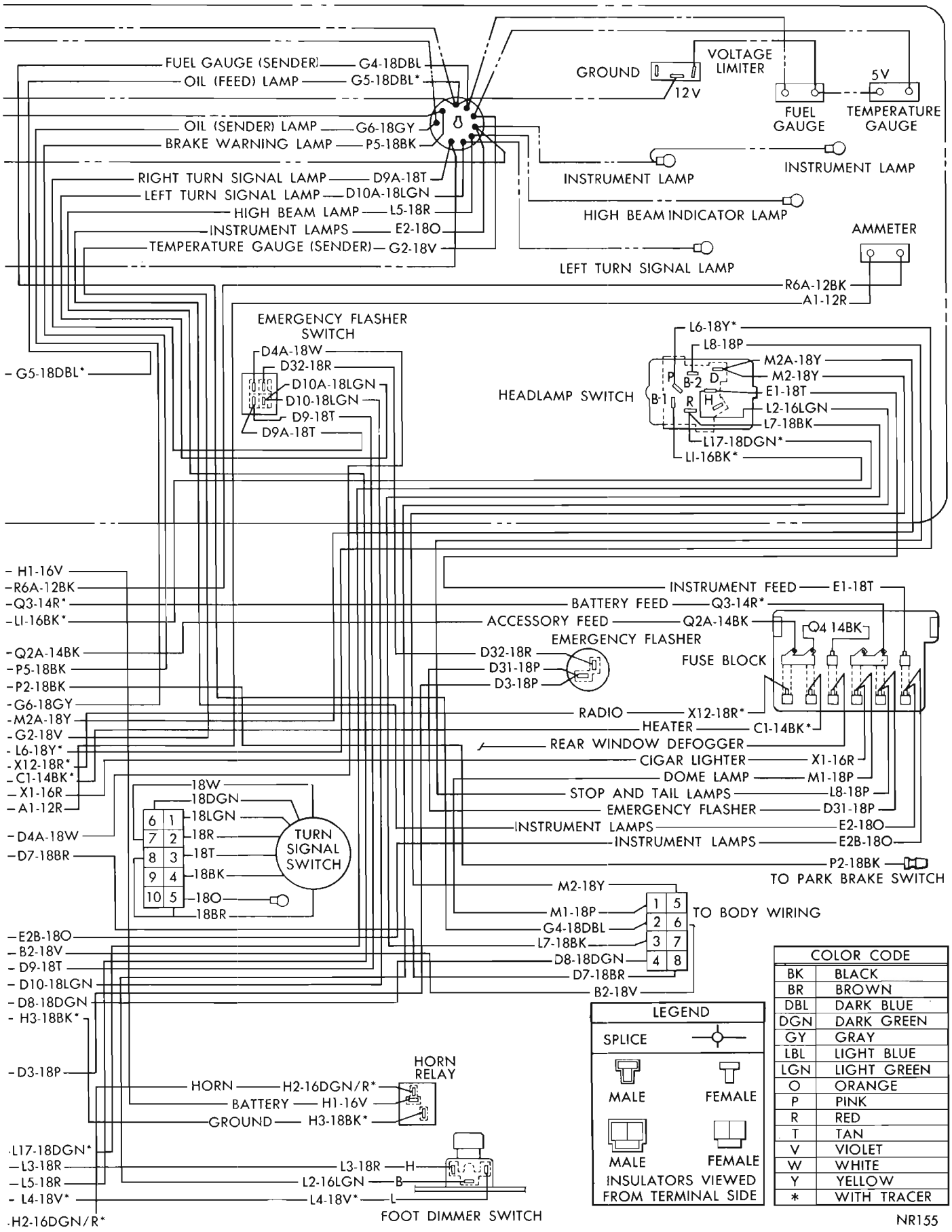

Fig. 22—Instrument Panel Wiring Diagram—Valiant

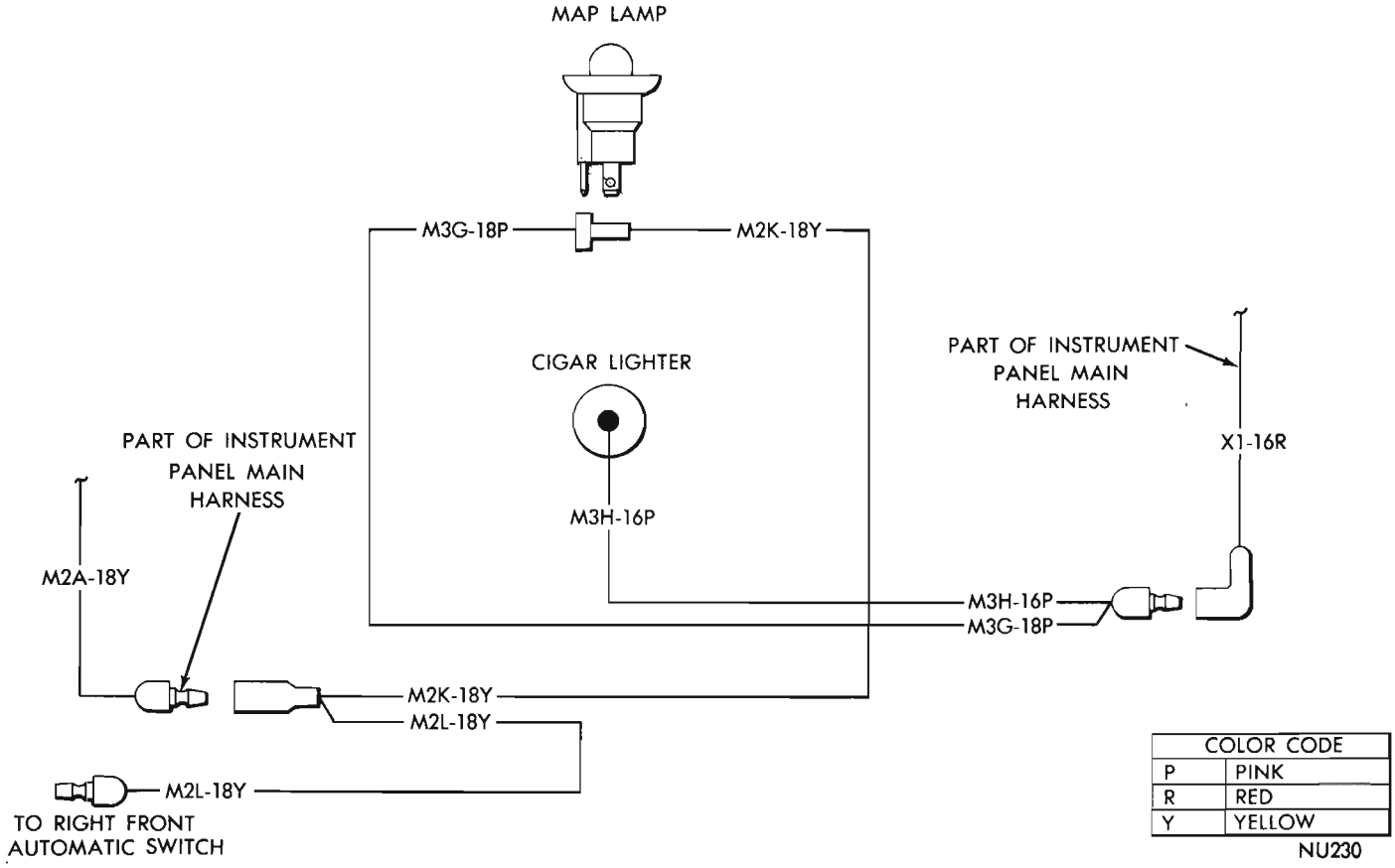

Fig. 23—Map Lamp Wiring (Without Map Lamp Switch) Valiant and Barracuda

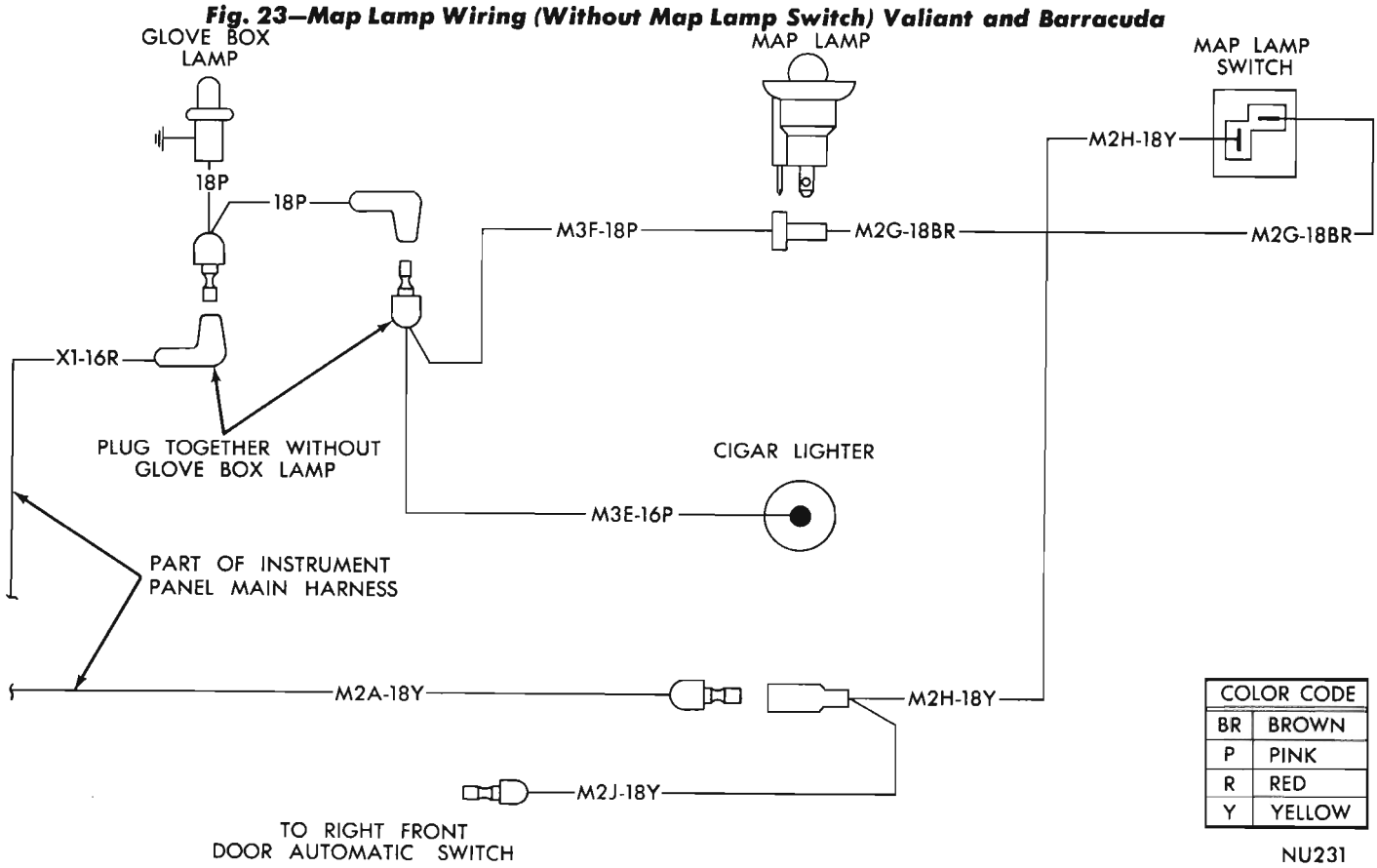

Fig. 24—Map Lamp Switch and Glove Box Lamp Wiring (Service Only) Valiant and Barracuda

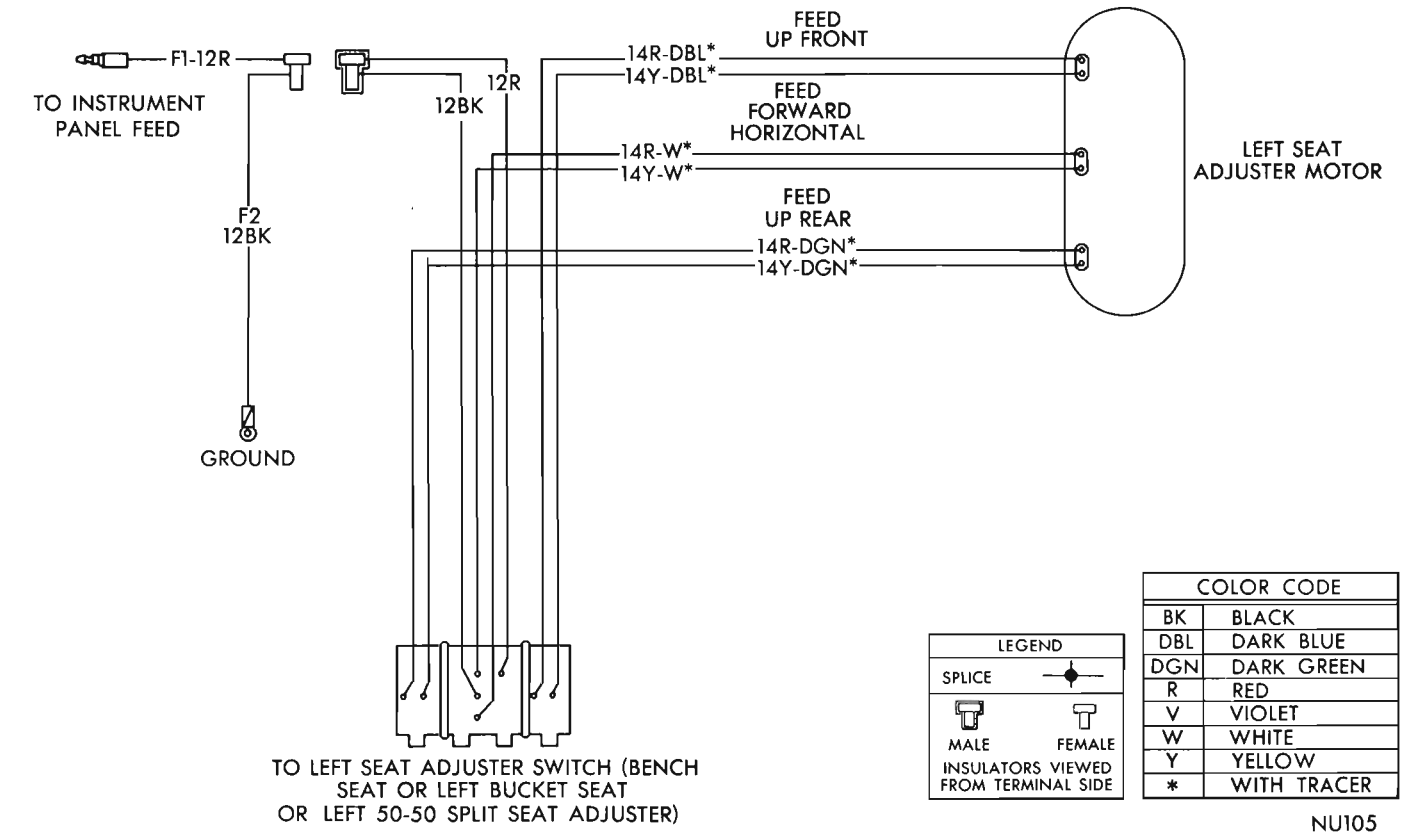

Fig. 25—Power Seats Wiring Diagram

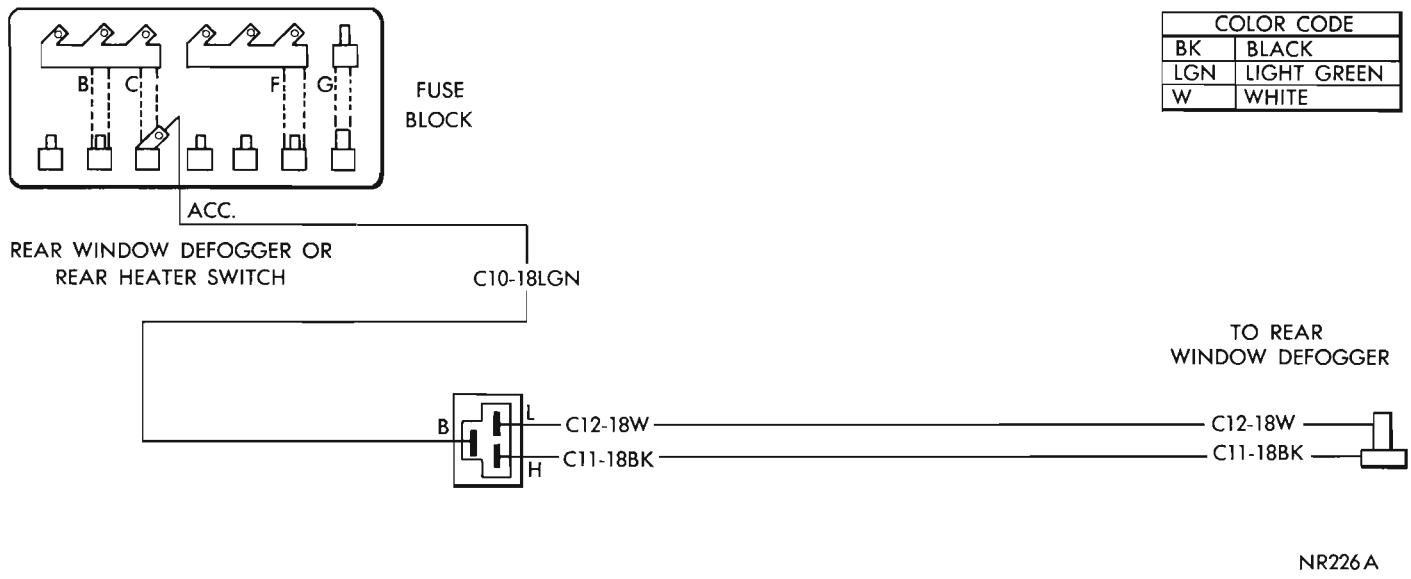

Fig. 26—Rear Window Defogger Wiring Diagram—All Models

ENGINE

CONTENTS

	Page		Page
CRANKCASE VENTILATION SYSTEM	84	383-440 CUBIC INCH ENGINES	45
GENERAL INFORMATION	1	426 CUBIC INCH "HEMI" ENGINES	67
SERVICE DIAGNOSIS	2	REPAIR OF DAMAGED OR WORN THREADS	85
170-225 CUBIC INCH 6 CYLINDER ENGINES	5	SPECIFICATIONS	85
273-318-340 CUBIC INCH V8 ENGINES	24	TIGHTENING REFERENCE	103

PLYMOUTH ENGINE APPLICATION

Model Application		No. Cyl.	Engine Type & Displacement	Compression Ratio	Remarks
Valiant 6	(Std)	6	"G" 170 Cubic Inch	8.5 to 1	1 BBl. Carb.
Valiant 6	(Opt)	6	"RG" 225 Cubic Inch	8.4 to 1	1 BBl. Carb.
Barracuda 6	(Std)				
Valiant 8	(Std)	8	"LA" 273 Cubic Inch	8.8 to 1	2 BBl. Carb., Std. Cam.
Barracuda	(Std)	8	"LA" 318 Cubic Inch	9.2 to 1	2 BBl. Carb., Std. Cam.
Valiant	(Opt)				
Barracuda	(Opt)	8	"LA" 340 Cubic Inch	10.5 to 1	4 BBl. Carb., Std. Cam.
	(Opt)	8	"LB" 383 Cubic Inch	10.0 to 1	4 BBl. Carb., Spec. Cam.
Belvedere 6	(Std)	6	"RG" 225 Cubic Inch	8.4 to 1	1 BBl. Carb.
Belvedere 8 Satellite 8	(Std)	8	"LA" 318 Cubic Inch	9.2 to 1	2 BBl. Carb., Std. Cam.
	(Opt)	8	"LB" 383 Cubic Inch	9.2 to 1	2 BBl. Carb., Std. Cam.
	(Opt)	8	"LB" 383 Cubic Inch	10.0 to 1	4 BBl. Carb., Std. Cam.
	(Opt)	8	"RB" 440 Cubic Inch	10.1 to 1	4 BBl. Carb., Spec. Cam.
	(Opt)	8	"RB" 426 Cubic Inch	10.25 to 1	2-4 BBl. Carb., Spec. Cam.
Road Runner	(Std)	8	"LB" 383 Cubic Inch	10.0 to 1	4 BBl. Carb., Spec. Cam.
Road Runner & G.T.X.	(Opt)	8	"RB" 426 Cubic Inch	10.25 to 1	2-4 BBl. Carb., Spec. Cam.
Road Runner (Opt) & G.T.X.	(Std)	8	"RB" 440 Cubic Inch	10.1 to 1	4 BBl. Carb., Spec. Cam.
Fury 6	(Std)	6	"RG" 225 Cubic Inch	8.4 to 1	1 BBl. Carb.
Fury 8	(Std)	8	"LA" 318 Cubic Inch	9.2 to 1	2 BBl. Carb., Std. Cam.
Fury 8 (Opt) Sport Fury 8	(Std)	8	"LB" 383 Cubic Inch	9.2 to 1	2 BBl. Carb., Std. Cam.
Fury 8 Sport Fury 8	(Opt)	8	"LB" 383 Cubic Inch	10.0 to 1	4 BBl. Carb., Std. Cam.
	(Opt)	8	"RB" 440 Cubic Inch	10.1 to 1	4 BBl. Carb., Std. Cam.
	(Opt)	8	"RB" 440 Cubic Inch	10.1 to 1	4 BBl. Carb., Spec. Cam.

GENERAL INFORMATION

Six Cylinder Engine

The 6 cylinder engine, (Fig. 1) is inclined toward the right at an angle of 30 degrees from the vertical in the engine compartment. This design permits a lower hood line and allows space in the engine compartment for the long intake manifold branches. The engine has in-line overhead valves and wedge shaped combustion chambers and a nominal compression ratio of 8.5:1 for the 170 cu. in. engine and 8.4:1 for the 225 cu. in. engine.

The lubrication system consists of an externally mounted rotor type pump on the lower right side of the cylinder block. A full flow replaceable element type oil filter is mounted on the rear of the oil pump body. Oil is forced by the oil pump to a series of oil passages in the engine (Fig. 48).

The semi-series flow cooling system contains an aluminum water pump body with a pressed in ball bearing and seal assembly and steel stamped impeller. The water pump housing is integral with the cylinder block.

V8 Engines

The V8 engines are all the valve-in-head type with hydraulic tappets. Engines vary in compression ratio, piston displacement, camshafts, valve springs, carburetors, intake manifolds and exhaust systems. The four barrel carburetor equipped engines use premium fuel.

The 426 hemi-head engine (Fig. 2) has twin four-barrel carburetors, nonsilenced low-restriction air cleaner, low-restriction intake manifold and exhaust headers, mechanical tappets.

Engine oiling system consists of a rotor type oil

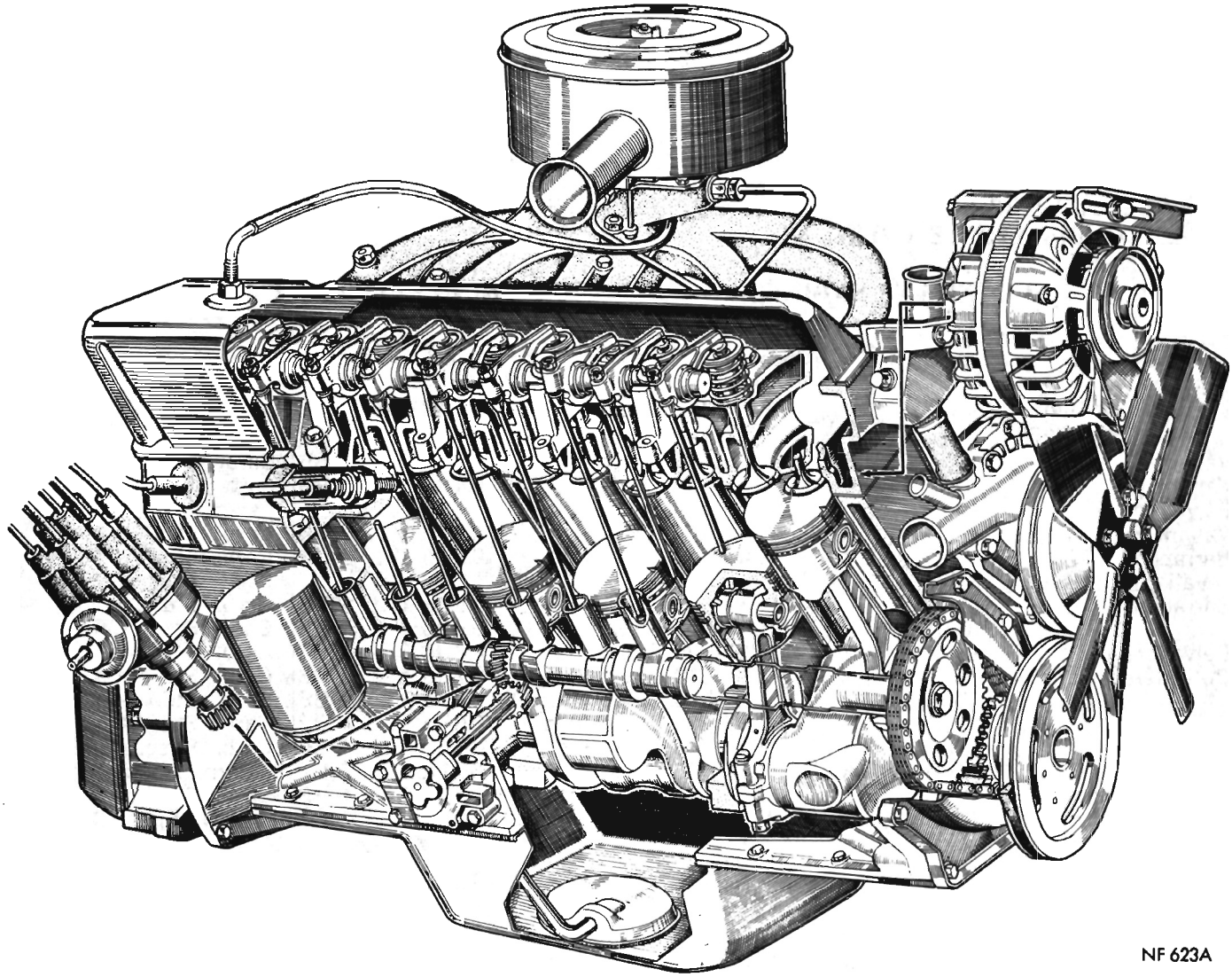

Fig. 1—Six Cylinder Engine Cutaway View

pump and a full flow oil filter. On the 273, 318 and 340 cubic inch engines, the pump is mounted internally. On the 383, 426 and 440 cubic inch engines, the pump is mounted externally. Oil is forced by the oil pump to a series of oil passages in the engine.

SERVICE DIAGNOSIS

Condition	Possible Cause	Correction
ENGINE WILL NOT START	(a) Weak battery.	(a) Test battery specific gravity. Recharge or replace as necessary.
	(b) Corroded or loose battery connections.	(b) Clean and tighten battery connections. Apply a coat of petroleum to terminals.
	(c) Faulty starter.	(c) Refer to "Starting Motor".*
	(d) Moisture on ignition wires and distributor cap.	(d) Wipe wires and cap clean and dry.
	(e) Faulty ignition cables.	(e) Replace any cracked or shorted cables.
	(f) Faulty coil or condenser.	(f) Test and replace if necessary.*
	(g) Dirty or corroded distributor contacts.	(g) Clean or replace as necessary.
	(h) Incorrect spark plug gap.	(h) Set gap at .035".
	(i) Incorrect ignition timing.	(i) Refer to "Ignition Timing."*
	(j) Dirt or water in fuel line or carburetor.	(j) Clean lines and carburetor.**

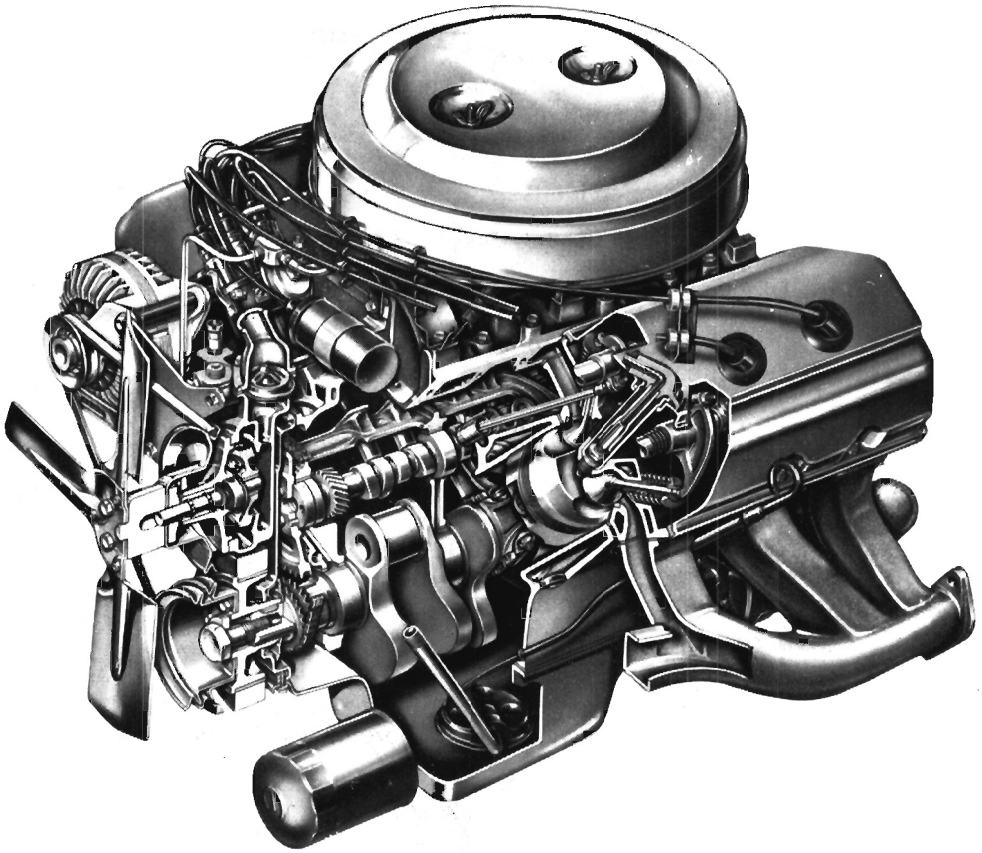

NN1033

Fig. 2—426 Hemi Engine Cutaway View

Condition	Possible Cause	Correction
	(k) Carburetor flooded.	(k) Adjust float level—check seats.**
	(l) Incorrect carburetor float setting.	(l) Adjust float level—check seats.**
	(m) Faulty fuel pump.	(m) Install new fuel pump.**
	(n) Carburetor percolating. No fuel in the carburetor.	(n) Measure float level. Adjust bowl vent.** Inspect operation of manifold control valve.
ENGINE STALLS	(a) Idle speed set too low.	(a) Adjust carburetor.**
	(b) Incorrect choke adjustment.	(b) Adjust choke.**
	(c) Idle mixture too lean or too rich.	(c) Adjust carburetor.**
	(d) Incorrect carburetor float setting.	(d) Adjust float setting.**
	(e) Leak in intake manifold.	(e) Inspect intake manifold gasket and replace if necessary.***
	(f) Dirty, burned or incorrectly gapped distributor contacts.	(f) Replace contacts and adjust.*
	(g) Worn or burned distributor rotor.	(g) Install new rotor.
	(h) Incorrect ignition wiring.	(h) Install correct wiring.
	(i) Faulty coil or condenser.	(i) Test and replace if necessary.*
	(j) Incorrect tappet lash.	(j) Adjust to specifications.
ENGINE LOSS OF POWER	(a) Incorrect ignition timing.	(a) Refer to "Ignition Timing."*
	(b) Worn or burned distributor rotor.	(b) Install new rotor.
	(c) Worn distributor shaft or cam.	(c) Remove and repair distributor.*
	(d) Dirty or incorrectly gapped spark plugs.	(d) Clean plugs and set gap at .035".
	(e) Dirt or water in fuel line, carburetor or filter.	(e) Clean lines, carburetor and replace filter.**
	(f) Incorrect carburetor float setting.	(f) Adjust float level.**
	(g) Faulty fuel pump.	(g) Install new pump.
	(h) Incorrect valve timing.	(h) Refer to "Checking Valve Timing."***
	(i) Blown cylinder head gasket.	(i) Install new head gasket.***

Condition	Possible Cause	Correction
	(j) Low compression.	(j) Test compression of each cylinder.***
	(k) Burned, warped or pitted valves.	(k) Install new valves.***
	(l) Plugged or restricted exhaust system.	(l) Install new parts as necessary.
	(m) Faulty ignition cables.	(m) Replace any cracked or shorted cables.
	(n) Faulty coil or condenser.	(n) Test and replace as necessary.*
ENGINE MISSES ON ACCELERATION	(a) Dirty, burned, or incorrectly gapped distributor contacts.	(a) Replace contacts and adjust.*
	(b) Dirty, or gap too wide in spark plugs.	(b) Clean spark plugs and set gap at .035".
	(c) Incorrect ignition timing.	(c) Refer to "Ignition Timing."*
	(d) Dirt in carburetor.	(d) Clean carburetor.**
	(e) Acceleration pump in carburetor.	(e) Install new pump.**
	(f) Burned, warped or pitted valves.	(f) Install new valves.***
	(g) Faulty coil or condenser.	(g) Test and replace if necessary.*
ENGINE MISSES AT HIGH SPEED	(a) Dirty or incorrectly gapped distributor contacts.	(a) Clean or replace as necessary.*
	(b) Dirty or gap set too wide in spark plug.	(b) Clean spark plugs and set gap at .035".
	(c) Worn distributor shaft or cam.	(c) Remove and repair distributor.*
	(d) Worn or burned distributor rotor.	(d) Install new rotor.
	(e) Faulty coil or condenser.	(e) Test and replace if necessary.*
	(f) Incorrect ignition timing.	(f) Refer to "Ignition Timing."*
	(g) Dirty jets in carburetor.	(g) Clean jets.**
	(h) Dirt or water in fuel line, carburetor or filter.	(h) Clean lines, carburetor and replace filter.**
NOISY VALVES	(a) High or low oil level in crankcase.	(a) Check for correct oil level.***
	(b) Thin or diluted oil.	(b) Change oil.***
	(c) Low oil pressure.	(c) Check engine oil level.**
	(d) Dirt in tappets.	(d) Clean tappets.**
	(e) Bent push rods.	(e) Install new push rods.***
	(f) Worn rocker arms.	(f) Inspect oil supply to rockers.***
	(g) Worn tappets.	(g) Install new tappets.***
	(h) Worn valve guides.	(h) Ream and install new valves with O/S stems.***
	(i) Excessive run-out of valve seats or valve faces.	(i) Grind valve seats and valves.***
	(j) Incorrect tappet lash.	(j) Adjust to specifications.
CONNECTING ROD NOISE	(a) Insufficient oil supply.	(a) Check engine oil level.***
	(b) Low oil pressure.	(b) Check engine oil level. Inspect oil pump relief valve and spring.***
	(c) Thin or diluted oil.	(c) Change oil to correct viscosity.
	(d) Excessive bearing clearance.	(d) Measure bearings for correct clearance.***
	(e) Connecting rod journals out-of-round.	(e) Replace crankshaft or regrind journals.***
	(f) Misaligned connecting rods.	(f) Replace bent connecting rods.***
MAIN BEARING NOISE	(a) Insufficient oil supply.	(a) Check engine oil level.***
	(b) Low oil pressure.	(b) Check engine oil level. Inspect oil pump relief valve and spring.***
	(c) Thin or diluted oil.	(c) Change oil to correct viscosity.
	(d) Excessive bearing clearance.	(d) Measure bearings for correct clearances.***
	(e) Excessive end play.	(e) Check No. 3 main bearing for wear on flanges.***
	(f) Crankshaft journal out-of-round or worn.	(f) Replace crankshaft or regrind journals.
	(g) Loose flywheel or torque converter.	(g) Tighten to correct torque.
OIL PUMPING AT RINGS	(a) Worn, scuffed, or broken rings.	(a) Hone cylinder bores and install new rings.***
	(b) Carbon in oil ring slots.	(b) Install new rings.***

Condition	Possible Cause	Correction
	(c) Rings fitted too tight in grooves.	(c) Remove the rings. Check grooves. If groove is not proper width, replace piston.***
OIL PRESSURE DROP	(a) Low oil level.	(a) Check engine oil level.
	(b) Faulty oil pressure sending unit.	(b) Install new sending unit.
	(c) Clogged oil filter.	(c) Install new oil filter.
	(d) Worn parts in oil pump.	(d) Replace worn parts or pump.
	(e) Thin or diluted oil.	(e) Change oil to correct viscosity.
	(f) Excessive bearing clearance.	(f) Measure bearings for correct clearance.***
	(g) Oil pump relief valve stuck.	(g) Remove valve and inspect, clean, and reinstall.
	(h) Oil pump suction tube loose, bent or cracked.	(h) Remove oil pan and install new tube if necessary.

* Refer to the "Electrical and Instruments" Group 8 for service procedures.
** Refer to the "Fuel System" Group 14 for service procedures.
*** Refer to the "Engine" Group 9 for service procedures.

SIX CYLINDER ENGINES

INDEX

	Page		Page
Camshaft	14	Oil Filter	24
Camshaft Bearings	15	Oil Pan	21
Connecting Rods	19	Oil Pump	22
Crankshaft Identification	18	Pistons, Pins and Rings	16
Crankshaft Main Bearings	19	Rear Main Bearing Oil Seal	21
Crankshaft Main Journals	19	Repair of Damaged or Worn Threads	85
Crankcase Ventilation System	84	Rocker Arms and Shaft Assembly	7
Cylinder Block	15	Specifications	85
Cylinder Head	8	Timing Chain Cover, Oil Seal and Chain	12
Engine Assembly	6	Tune-Up	5
Installing Piston and Connecting Rod Assembly	19	Valves and Valve Springs	9
Measuring Connecting Rod Bearing Clearance	19	Valve Timing	12
Measuring Main Bearing Clearance	20		

SERVICE PROCEDURES

TUNE-UP

(1) Test battery specific gravity, add water if necessary, clean and tighten battery connections.

(2) Test cranking voltage. See "Starting Motor Cranking Voltage" Electrical Group 8.

(3) Tighten intake and exhaust manifold bolts to 15 foot-pounds.

(4) Perform cylinder compression test. Compression should not vary more than 20 pounds.

(5) Clean or replace spark plugs as necessary and adjust gap to .035 inch. Tighten to 30 foot-pounds.

(6) Test resistance of spark plug cables. Refer to "Ignition System Secondary Circuit Inspection" Electrical Section.

(7) Inspect the breaker plate contacts, primary wire and vacuum advance operation. Test coil output voltage, primary and secondary resistance. Test Condenser. Replace parts as necessary. Refer to Ignition System and make necessary adjustments.

(8) Reset ignition timing with vacuum advance line disconnected. Ignition timing should be set to compensate for altitudes and/or gasoline grades.

(9) Set carburetor idle mixture adjustment. Adjust throttle stop screw to specifications. Perform a combustion analysis.

(10) Test fuel pump for pressure and vacuum. Refer to "Fuel System" Group 14, Specifications.

(11) Inspect manifold heat control valve in exhaust manifold for proper operation and apply Manifold Heat Control Valve Solvent Part Number 2525054 or equivalent to bushing and shaft.

(12) Every 6 months remove filter element and blow out dirt gently with an air hose. Direct air from inside out, and keep nozzle 2 inches away from element to avoid damaging. Clean metal housing and install element. Every two years, install a new factory recommended filter element or equivalent. Service



Fig. 3—Cleaning Filter Element

unit more frequently when driving under severe conditions, such as in dusty areas (Fig. 3).

(13) Inspect crankcase ventilation system as outlined on page 84.

(14) Inspect and adjust accessory belt drives referring to Cooling System, Group 7 for proper adjustments.

(15) Road test vehicle as a final test.

ENGINE ASSEMBLY

Removal

(1) Scribe hood hinge outlines on hood and remove hood.

(2) Drain cooling system and remove battery and carburetor air cleaner.

(3) Remove radiator and heater hoses and remove radiator.

(4) Remove closed ventilation system from cylinder head cover.

(5) Disconnect fuel lines, carburetor linkage and wiring to engine.

(6) Disconnect exhaust pipe at manifold.

(7) Raise vehicle on a hoist.

(8) Drain converter housing and transmission. Remove oil cooler lines, filler tube and shift cable.

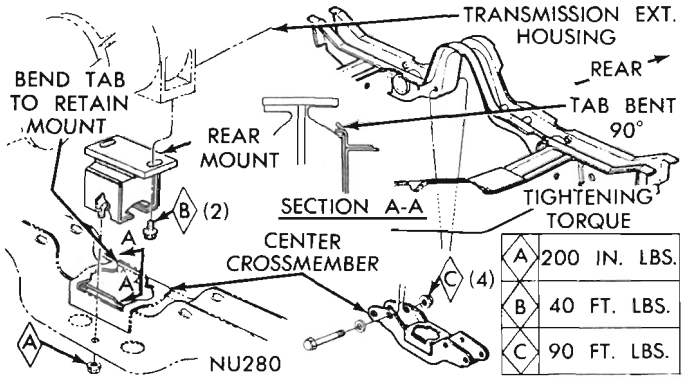

Fig. 4—Engine Rear Support—Valiant and Barracuda

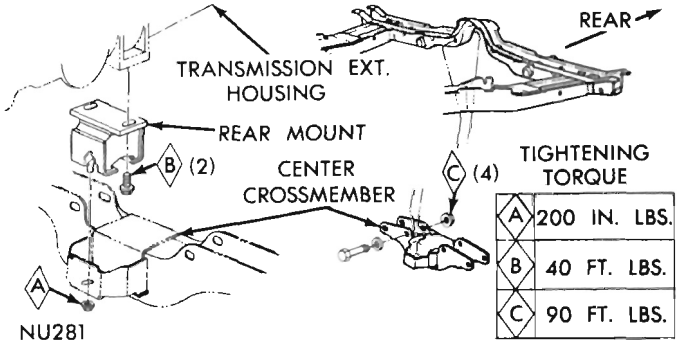

Fig. 5—Engine Rear Support—Satellite

(9) Remove clutch torque shaft, brake cables and rods.

(10) Remove speedometer cable and gear shift rods.

(11) Disconnect propeller shaft and tie-up out of way.

(12) Install engine support fixture Tool C-3487 and leg C-3806 to support rear of engine.

(13) Remove engine rear support crossmember (Figs. 4, 5 or 6).

(14) Remove transmission bolts from clutch housing.

(15) Remove transmission.

(16) Lower vehicle.

(17) Install engine lifting fixture Tool C-3804 to cylinder head and attach a chain hoist to fixture eyebolt.

(18) Remove engine support fixture.

(19) Remove front engine mount bolts (Figs. 7, 8 or 9).

(20) Lift engine from engine compartment and install in engine repair stand.

Installation

(1) Install engine lifting fixture Tool C-3804 and attach a chain hoist to fixture eyebolt.

(2) Lower engine into engine compartment until front of engine is positioned on front engine mounts.

(3) Install front engine mount bolts. **Do not tighten.**

(4) Install engine support fixture Tool C-3487 and leg C-3806.

(5) Remove chain hoist and engine lifting fixture.

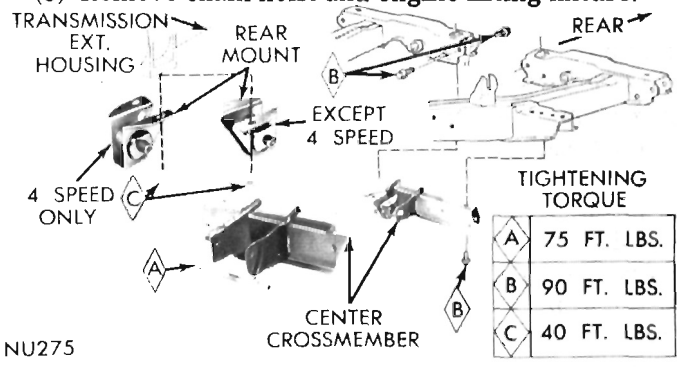

Fig. 6—Engine Rear Support—Fury

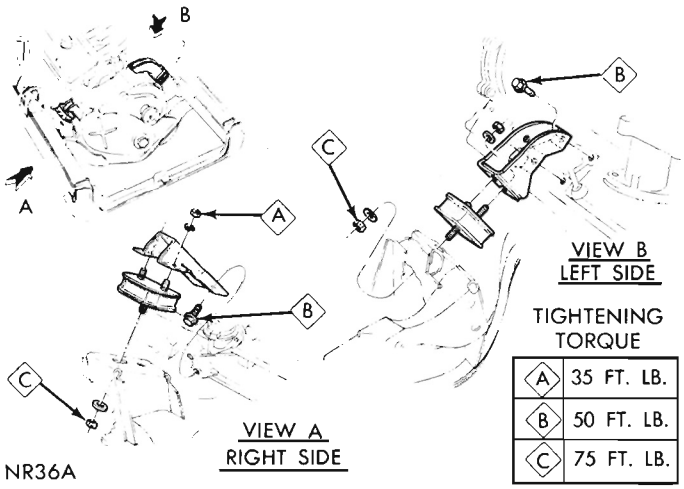

Fig. 7—Front Engine Mounts—Valiant and Barracuda

(6) Raise vehicle on a hoist.

(7) Position rear of engine and install transmission.

(8) Install engine rear support crossmember, remove engine support fixture.

(9) Connect propeller shaft at transmission.

(10) Install speedometer cable and gear shift rods.

(11) Install clutch torque shaft, brake cables and rods.

(12) Install cooler lines, and transmission filler tube.

(13) Lower vehicle.

(14) Tighten front engine mount bolts to specified torque.

(15) Connect exhaust pipe at the manifold using a new gasket.

(16) Connect fuel lines, carburetor linkage and wiring to engine.

(18) Install hood using scribe marks for proper alignment.

(17) Install closed ventilation system on the cylinder head cover.

(19) Close all drain cocks and fill cooling system.

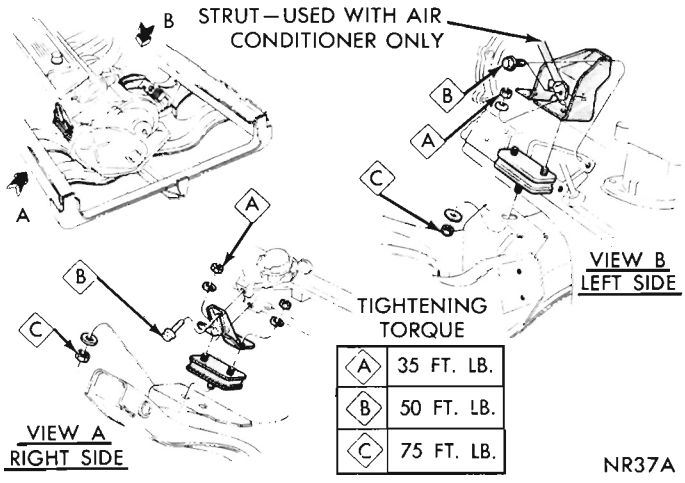

Fig. 8—Engine Front Mounts—Satellite

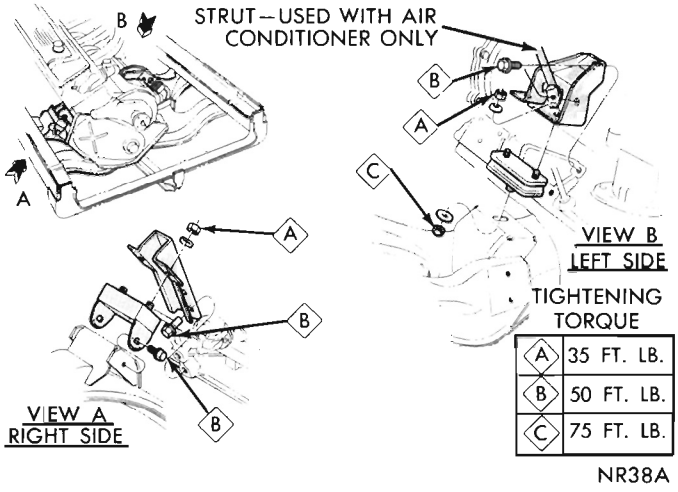

Fig. 9—Front Engine Mounts—Fury

(20) Fill engine crankcase and transmission. Refer to "Lubrication" Group O, for quantities and lubricants to use. Inspect entire system for leaks and correct.

Whenever an engine has been rebuilt and/or a new camshaft and/or tappets are installed, one quart of engine supplement, Chrysler Part Number 1879406 or equivalent should be added to the engine oil to aid in break-in. The oil mixture should be left in the engine for a minimum of 500 miles. Drain the oil mixture at the next normal oil change.

(21) Start engine and run until normal temperature is reached.

(22) Inspect timing (with vacuum advance line removed), adjust carburetor and transmission linkage as necessary. Connect vacuum line and road test vehicle.

ROCKER ARMS AND SHAFT ASSEMBLY

Stamped steel rocker arms are arranged on a single rocker arm shaft. Hardened steel spacers are used between the pairs of rocker arms. The rocker shaft is held in place by bolts and stamped steel retainers attached to the seven brackets on the cylinder head.

Removal

(1) Remove closed ventilation system.

(2) Remove cylinder head cover and gasket.

(3) Remove rocker shaft bolts and retainers.

(4) Remove rocker arms and shaft assembly.

Installation

(1) Rocker arms and shaft assembly must be installed, (Fig. 10). The flat on the end of rocker shaft must be on top and point toward front of engine. This is necessary to provide proper lubrication to rocker assemblies.

(2) Install rocker shaft retainers between rocker

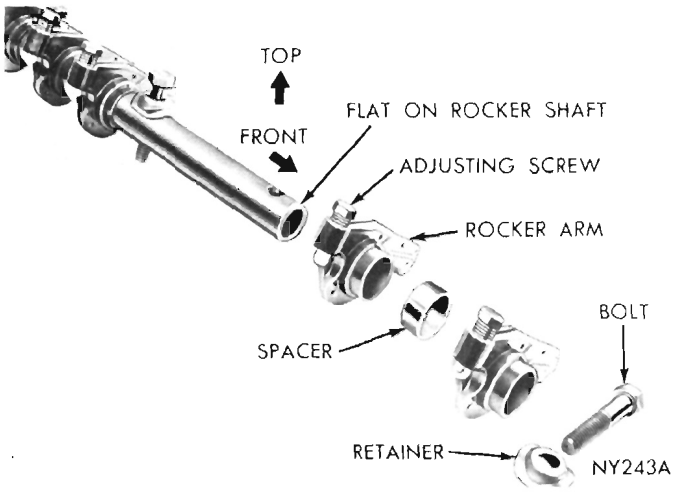

Fig. 10—Rocker Shaft Assembly

arms so they seat on rocker shaft and not on the extended bushing of rocker arm.

Be sure to install long retainer in center position only.

(3) Install rocker shaft bolts. Install long bolt at the rear of the engine. Tighten all bolts to 30 foot-pounds.

(4) Operate engine until normal operating temperature is reached (approximately 180°F. water temperature).

(5) Allow engine to idle at 550 rpm at this 180° F. temperature for five minutes.

(6) Adjust tappets, **Hot**; intake .010 inch, exhaust .020 inch.

(7) Place new cylinder head cover gasket in position and install the cylinder head cover. Tighten nuts to 40 inch-pounds.

(8) Install closed ventilation system.

CYLINDER HEAD

The chrome alloy cast iron cylinder head (Fig. 11) is held in place by 14 bolts. Spark plugs are located at the wide edge of the combustion chambers and aluminum spark plug tubes serve as spark plug gaskets.

Removal

(1) Drain cooling system.

(2) Remove carburetor air cleaner and fuel line.

(3) Disconnect accelerator linkage.

(4) Remove vacuum control tube at carburetor and distributor.

(5) Disconnect spark plug wires by pulling straight out in line with the plug.

(6) Disconnect heater hose and clamp holding by-pass hose.

(7) Disconnect heat indicator sending unit wire.

(8) Disconnect exhaust pipe at exhaust manifold flange.

(9) Remove intake and exhaust manifold and carburetor as an assembly.

(10) Remove closed ventilation system and cylinder head cover.

(11) Remove rocker arms and shaft assembly.

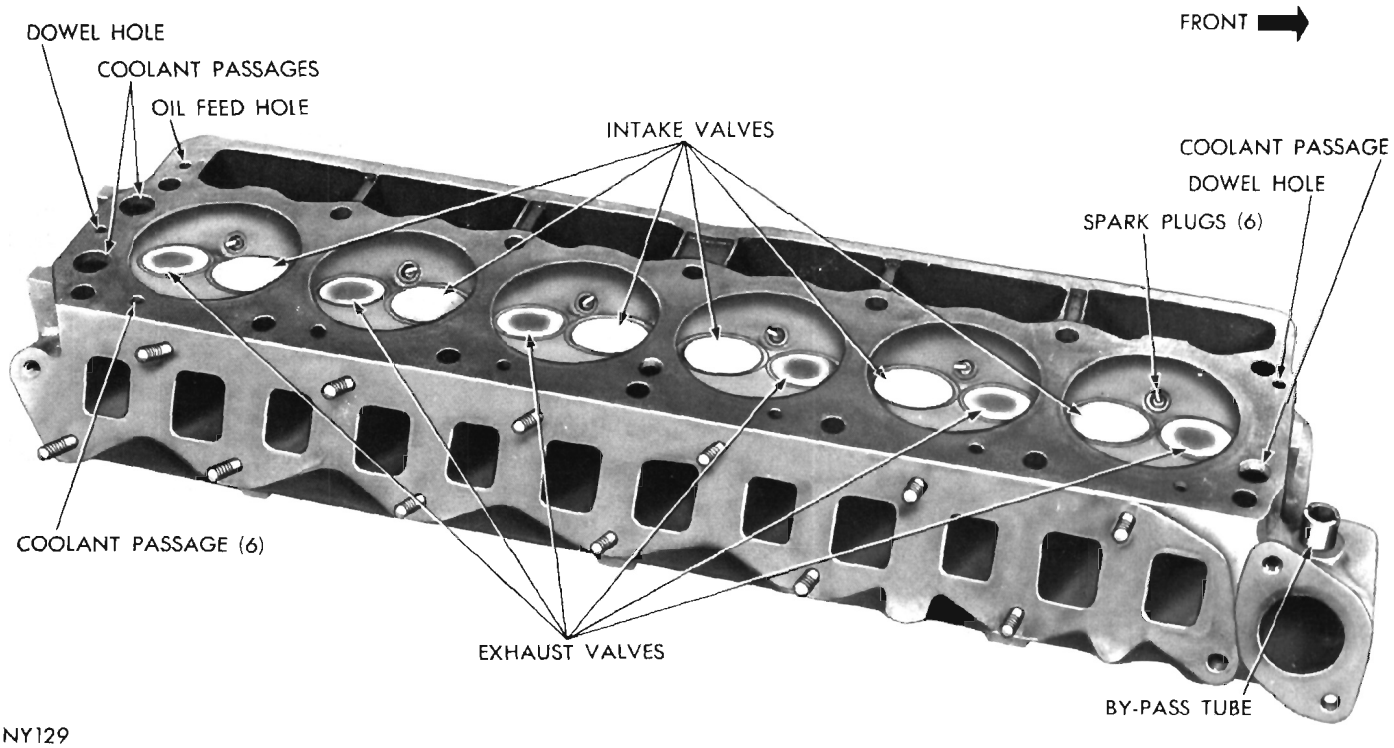

Fig. 11—Cylinder Head

(12) Remove push rods and place them in their respective slots in holder; Tool C-3068.

(13) Remove 14 head bolts and remove cylinder head.

(14) Place cylinder head in holding fixture Tool C-3626 and remove spark plugs and tubes.

Installation

(1) Clean all gasket surfaces of cylinder block and cylinder head and install spark plugs.

(2) Inspect all surfaces with a straight edge if there is any reason to suspect leakage.

(3) Coat new gasket lightly with Chrysler Sealer, Part Number 1057794 or equivalent. Install gasket and cylinder head.

(4) Install cylinder head bolts. Starting at top center, tighten all cylinder head bolts to 50 foot-pounds in sequence (Fig. 12). Repeat the procedure, retightening all cylinder head bolts to 65 foot-pounds.

(5) Install rocker arms and shaft assembly with "FLAT" on end of rocker shaft "ON TOP" and pointing toward front of engine, (Fig. 10) to provide proper lubrication to rocker assemblies. **Install rocker shaft retainers between rocker arms to they seat on rocker shaft and not on extended bushing on rocker arm.** Be sure to install long retainer in center position only. Install rocker shaft bolts (long bolt at rear of engine) and tighten to 25 foot-pounds.

(6) Loosen the 3 bolts holding intake manifold to exhaust manifold. This is required to maintain proper alignment.

(7) Install intake and exhaust manifold and carburetor assembly to the cylinder head with cup side of the conical washers against manifolds. Tighten nuts to 10 foot-pounds.

(8) Tighten 3 bolts holding intake manifold to exhaust manifold to 15 foot-pounds.

Sequence: Tighten inner bolt first, then the outer two bolts.

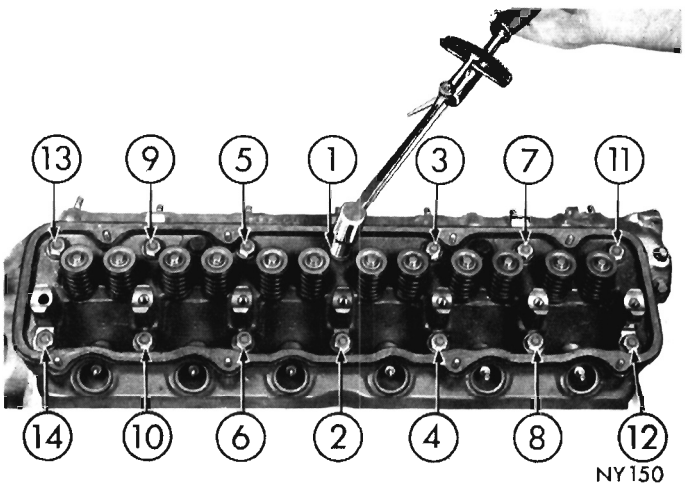

Fig. 12—Cylinder Head Tightening Sequence

(9) Connect heater hose and by-pass hose clamp.

(10) Connect heat indicator sending unit wire, accelerator linkage and spark plug cables.

(11) Install vacuum control tube at carburetor and distributor.

(12) Connect exhaust pipe to exhaust manifold flange.

(13) Install fuel line and carburetor air cleaner.

(14) Fill cooling system.

(15) Operate engine until normal operating temperature is reached (approximately 180° F. water temperature).

(16) Allow engine to idle at 550 rpm at this 180° F. temperature for five minutes.

(17) Adjust tappets, **HOT;** intake .010 inch, exhaust .020 inch.

(18) Place new cylinder head cover gasket in position and install the cylinder head cover. Tighten nuts to 40 inch-pounds.

(19) Install closed ventilation system.

VALVES AND SPRINGS

Valves are arranged in line in the cylinder head and operate in guides that are integral with the cylinder heads.

Removal

(1) With cylinder head removed, compress valve springs, using Tool C-3422A (Fig. 13).

(2) Remove valve retaining locks, valve spring retainers, valve stem cup seals and valve springs.

Remove any burrs from valve stem lock grooves to prevent damage to the valve guide when valves are removed. Identify valves to insure installation in original location.

Valve Inspection

(1) Clean valves thoroughly and discard burned, warped and cracked valves.

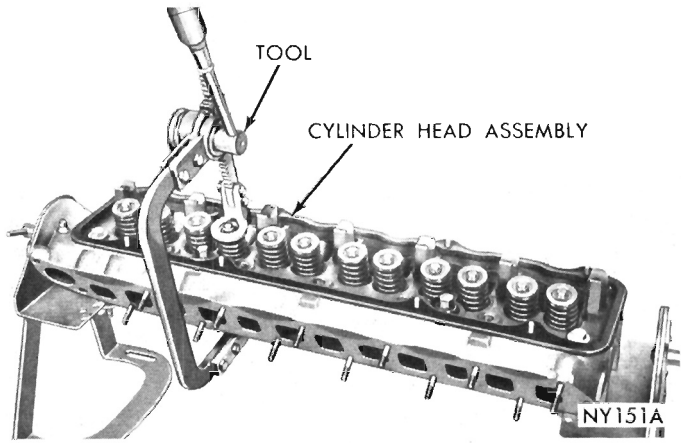

Fig. 13—Compressing Valve Spring

(2) Measure valve stems for wear. The intake valve stem diameter (new valve) should measure .372 to .373 inch and exhaust valve stem diameter (new valve) should measure .371 to .372 inch. If wear exceeds .002 inch, replace the valve.

(3) Remove carbon and varnish deposits from inside of valve guides, with Tool C-756.

(4) Measure valve stem guide clearance as follows:

(a) Install sleeve Tool C-3973 over valve stem and install valve (Fig. 14). The special sleeve places the valve at the correct height for measuring with a dial indicator.

(b) Attach dial indicator Tool C-3339 to cylinder head and set it at right angle to the valve stem being measured (Fig. 15).

(c) Move valve to and from the indicator. The total dial indicator reading should not exceed .017 inch. Ream guides for valves with oversize stems if dial indicator reading is excessive or if stems are scuffed or scored.

(5) Service valves with oversize stems are available in .005, .015 and .030 inch oversize. Reamers to accommodate the oversize valve stem are as follows:

Reamer Tool Number	Reamer Oversize	Valve Guide Size
C-3433	.005 in.	.379-.380 in.
C-3430	.015 in.	.389-.390 in.
C-3427	.030 in.	.404-.405 in.

(6) Slowly turn reamer by hand and clean guide thoroughly before installing a new valve. **Do not attempt to ream valve guides from standard directly to .030 inch. Use step procedure of .005, .015 and .030 inch so valve guides may be reamed true in relation to the valve seat.**

Refacing Valves and Valve Seats

(1) The intake and exhaust valve seats and the intake valve face have a 45 degree angle. The exhaust valve face has a 43 degree angle. The valve face and valve seat angles, are shown in Figure 16.

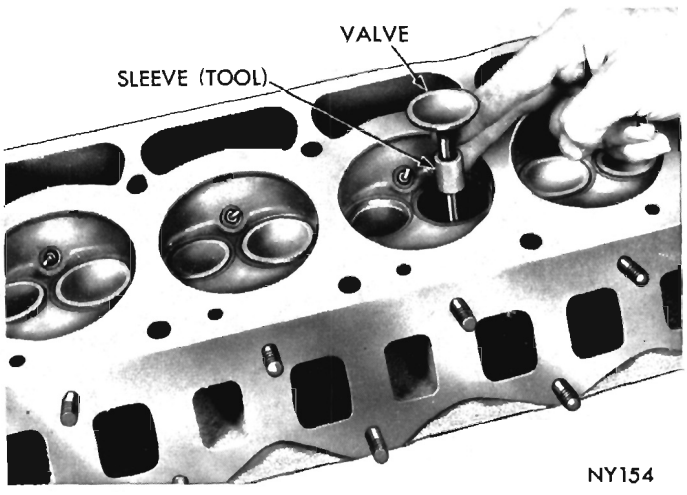

Fig. 14—Installing Valve and Tool C-3973

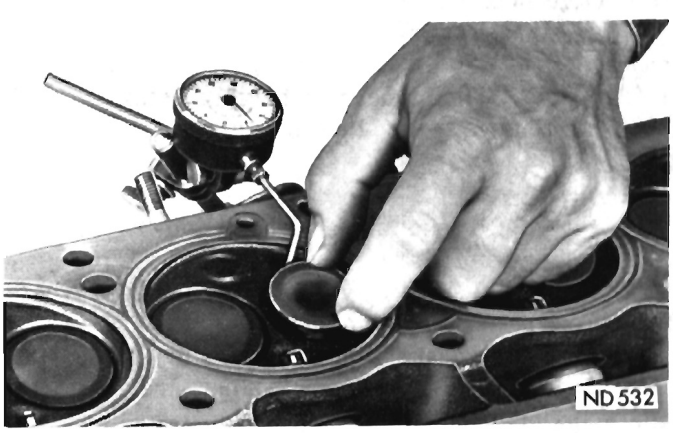

Fig. 15—Measuring Valve Guide Wear

(2) Inspect the remaining margin after the valves are refaced (Fig. 17). Valves with less than 3/64 inch margin should be replaced.

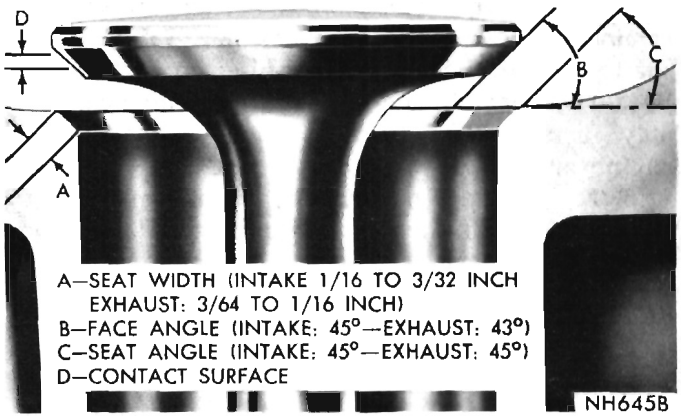

Fig. 16—Valve Face and Seat Angle

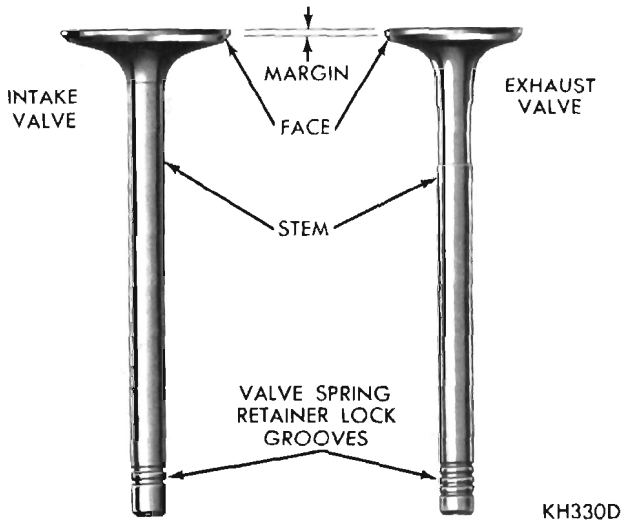

Fig. 17—Intake and Exhaust Valves

(3) When refacing valve seats, it is important that the correct size valve guide pilot be used for reseating stones. A true and complete surface must be obtained.

(4) Measure the concentricity of the valve seat using dial indicator No. 13725. Total runout should not exceed .002 inch (total indicator reading).

(5) Inspect valve seat with Prussian blue to determine where valve contacts the seat. To do this, coat valve seat **lightly** with Prussian Blue then set the valve in place. Rotate the valve with light pressure. If the blue is transferred to the center of the valve face, contact is satisfactory. If the blue is transferred to the top edge of valve face, lower the valve seat with a 30° stone. If the blue is transferred to the bottom edge of valve face raise the valve seat with a 60° stone.

(6) When the seat is properly positioned the width of intake seats should be 1/16 to 3/32 inch. The width of exhaust seats should be 3/64 to 1/16 inch.

Testing Valve Springs (Fig. 18)

(1) Whenever valves have been removed for inspection, reconditioning or replacement, valve springs should be tested. As an example, the compressed length of the spring to be tested is 1-5/16 inches. Turn table of Tool C-647 until the surface is in line with the 1-5/16 inch mark on the threaded stud and the zero mark to the front. Place spring over the stud on table and lift the compressing lever to set the tone device. Pull on torque wrench until ping is heard. Take reading on torque wrench at this instant. Multiply this reading by two. This will give the spring load at the test length. Fractional measurements are indicated on the table for finer adjustments. Refer to specifications to obtain specified height and allowable tensions. Discard the springs that do not meet specifications.

(2) Inspect each valve spring for squareness with a steel square and surface plate, test springs from both ends, (Fig. 19).

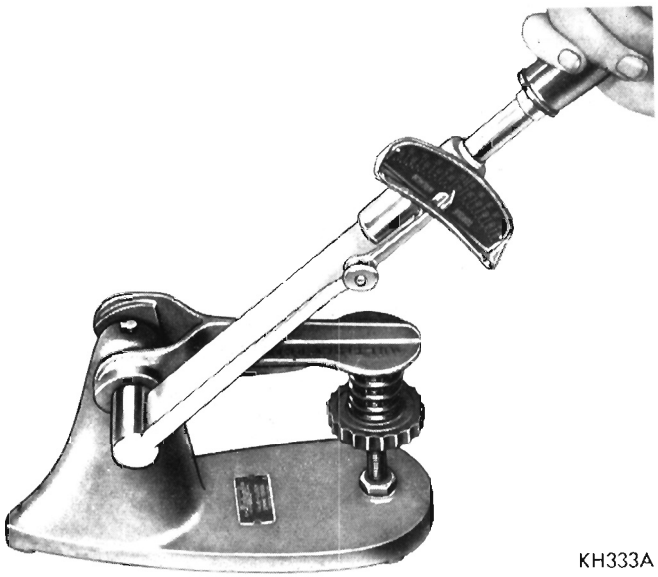

Fig. 18—Testing Valve Spring

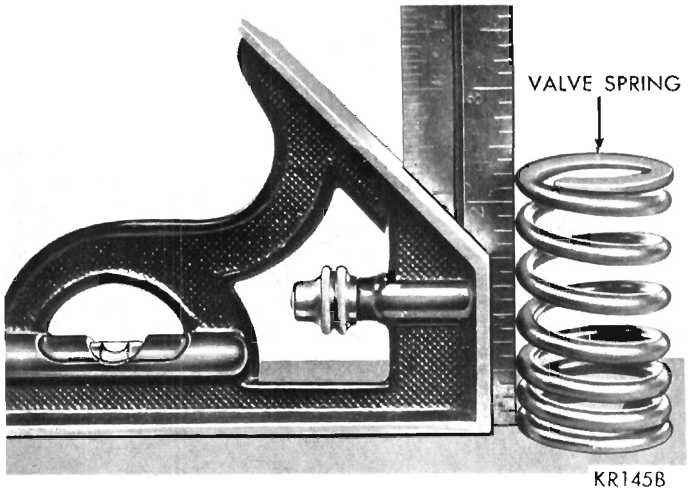

Fig. 19—Inspecting Valve Spring Squareness

If the spring is more than 1/16 inch out of square, install a new spring.

Installation

(1) Coat valve stems with lubrication oil and insert them in cylinder head.

(2) If valves or seats are reground, test valve stem height with Tool C-3746. If valve is too long, grind off the tip until length is within limits.

(3) Install new cup seals on all valve stems (long seal on intake valve and short seal on exhaust valve) and over valve guides (Figs. 20 and 21).—Install valve springs and retainers.

(4) Compress valve springs with Tool C-3422A, install locks and release the tool. **If valves and/or seats are reground, measure the installed height of springs. Make sure measurement is taken from the bottom of the spring seat in the cylinder head to the bottom surface of the spring retainer. (If spacers are in-**

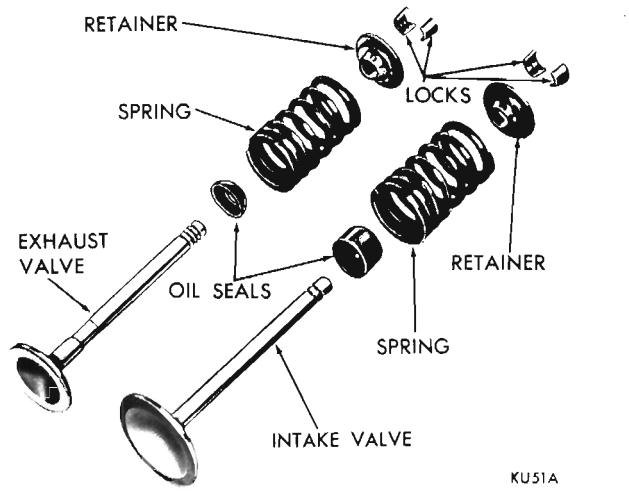

Fig. 20—Valve Assembly

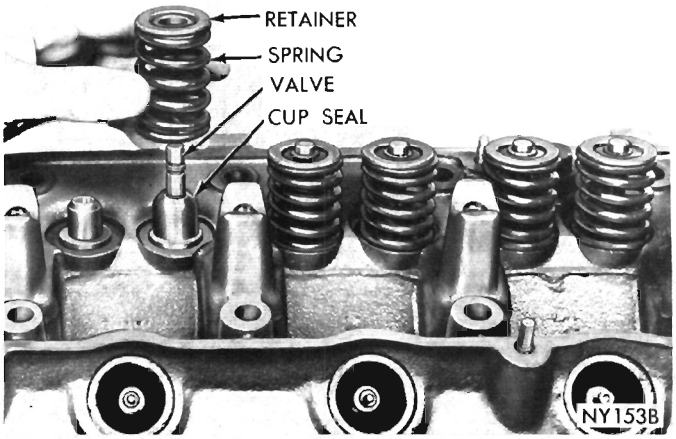

Fig. 21—Installing Valves and Cup Seals

stalled, measure from the top of spacer). If height is greater than 1-11/16 inches, install a 1/16 inch spacer in the head counterbore to bring the spring height back to normal 1-5/8 inches to 1-11/16 inches.

VALVE TIMING

(1) Rotate crankshaft until No. 6 exhaust valve is closing and No. 6 intake valve is opening. Install a dial indicator so that indicator pointer contacts valve spring retainer on No. 1 intake valve parallel to the axis of the valve stem.

(2) Turn No. 1 intake adjusting screw in one complete turn to remove the lash. Adjust dial indicator to zero. Rotate crankshaft clockwise (normal running direction) until valve has lifted .023 inch. The timing of the crankshaft pulley should now read from 12 degrees before top dead center to dead center. Readjust lash.

(3) If reading is not within specified limits:

(a) Inspect sprocket index marks.

(b) Inspect timing chain for wear.

(c) Inspect accuracy of "DC" mark on timing indicator.

TIMING CHAIN COVER, OIL SEAL AND CHAIN

Cover Removal

(1) Drain cooling system.

(2) Remove radiator and fan.

(3) Install Tool C-3732A and pull vibration damper assembly off end of crankshaft (Fig. 22).

(4) Loosen oil pans bolts to allow clearance and remove chain case cover and gasket.

It is normal to find particles of neoprene collected between seal retainer and crankshaft oil slinger after seal has been in operation.

(5) Slide crankshaft oil slinger off end of crankshaft.

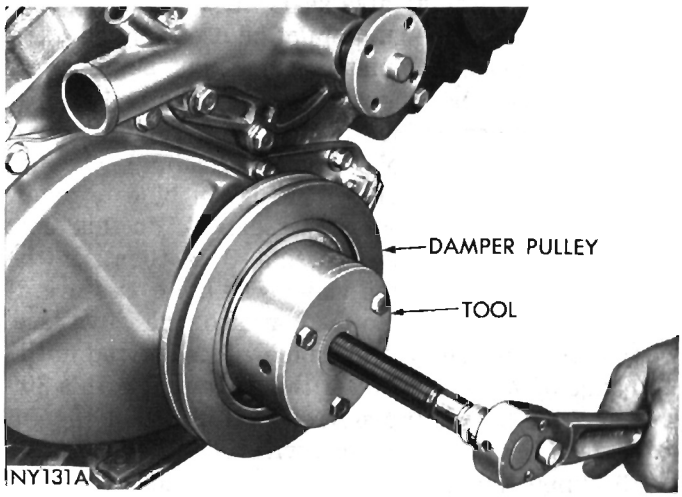

Fig. 22—Removing Vibration Damper Assembly

Measuring Timing Chain for Stretch

(1) Place a scale next to the timing chain so that any movement of the chain may be measured.

(2) Place a torque wrench and socket over the camshaft sprocket lock bolt and apply torque in the direction of crankshaft rotation to take up slack; 30 foot-pounds (cylinder head installed) or 15 foot-pounds (cylinder head removed). **With torque applied to the camshaft sprocket bolt, crankshaft should not be permitted to move. It may be necessary to block the crankshaft to prevent rotation.**

(3) Holding a scale with dimensional reading even with the edge of a chain link, apply torque in the reverse direction 30 foot-pounds (cylinder head installed) or 15 foot-pounds (cylinder head removed) and note the amount of chain movement (Fig. 23).

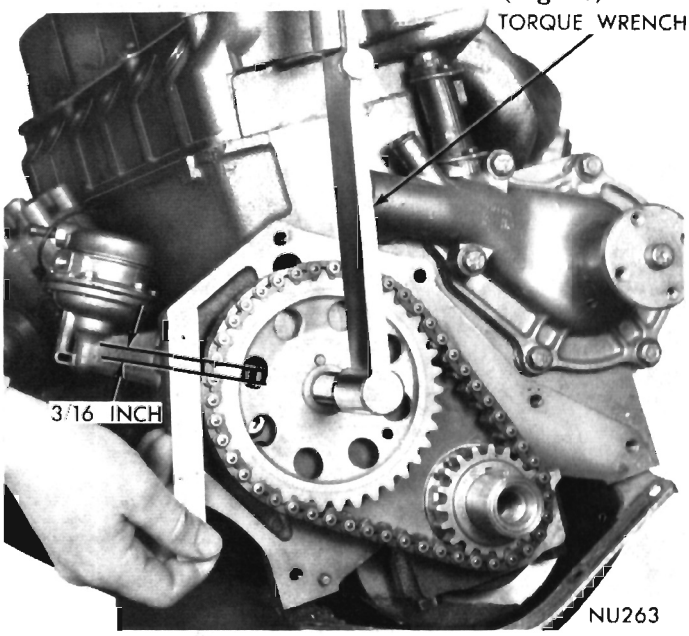

Fig. 23—Measuring Chain Stretch

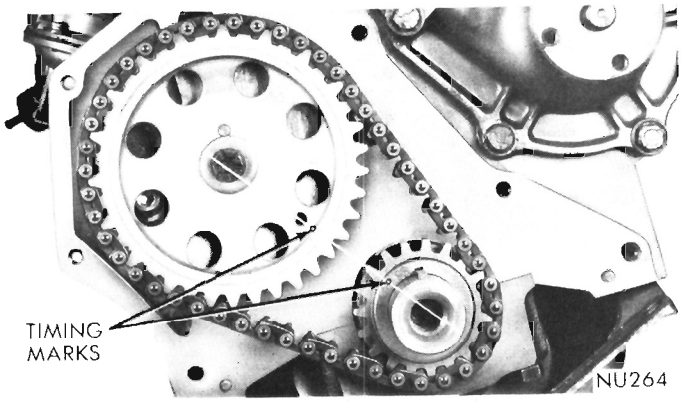

Fig. 24—Alignment of Timing Marks

(4) If chain movement exceeds 3/16 inch, install a new timing chain.

(5) If chain is satisfactory, slide the crankshaft oil slinger over the shaft and up against sprocket (flange away from sprocket).

(6) If chain is not satisfactory, remove camshaft sprocket attaching bolt and remove timing chain with camshaft sprocket.

(7) Turn crankshaft to line up the centerline of camshaft and crankshaft with the timing mark on crankshaft sprocket.

(8) Install camshaft sprocket and timing chain.

(9) Line up timing marks on the sprockets with the centerline of crankshaft and camshaft (Fig. 24).

(10) Tighten camshaft sprocket lock bolt to 35 foot-pounds. Slide the crankshaft oil slinger over the shaft and up against sprocket (flange away from sprocket).

Oil Seal Replacement (Cover Removed)

(1) Position remover screw of Tool C-3506 through case cover, the inside of case cover up. Position remover blocks directly opposite each other, and force angular lip between the neoprene and flange of seal

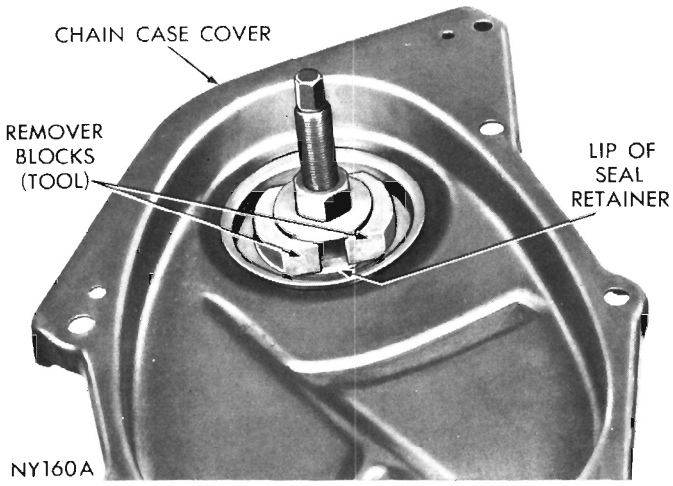

Fig. 25—Remover Blocks Expanded to Puller Position

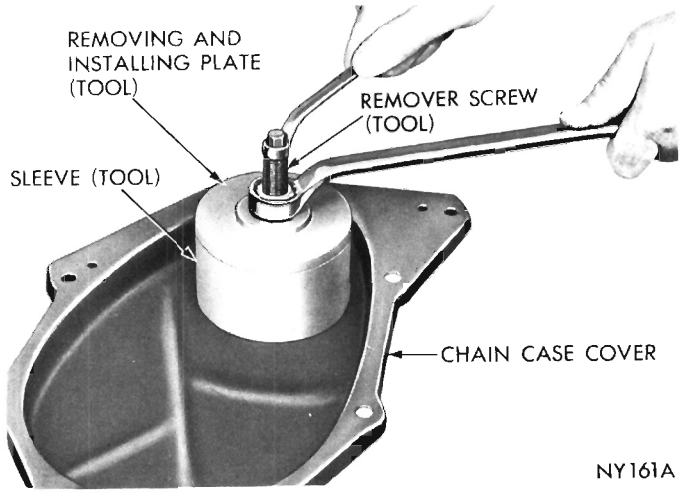

Fig. 26—Removing Oil Seal

retainer.

(2) Place washer and nut on the remover screw. Tighten nut forcing the blocks into the gap to a point of distorting the seal retainer lip (Fig. 25). **Remover is only positioned at this point.**

(3) Place sleeve over the retainer and install the removing and installing plate into the sleeve.

(4) Place flat washer and nut on remover screw. Hold center screw and tighten lock nut to remove seal (Fig. 26).

(5) Insert remover screw through the removing and installing plate so the thin shoulder will be facing up.

(6) Insert the remover screw with the plate through the seal opening (inside of chain case cover facing up).

(7) Place the seal in cover opening, with neoprene down. Place seal installing plate into the new seal, with the protective recess toward lip of seal retainer (Fig. 27).

(8) Install flat washer and nut on the remover screw; hold screw and tighten nut (Fig. 28).

(9) Seal is properly installed when the neoprene is

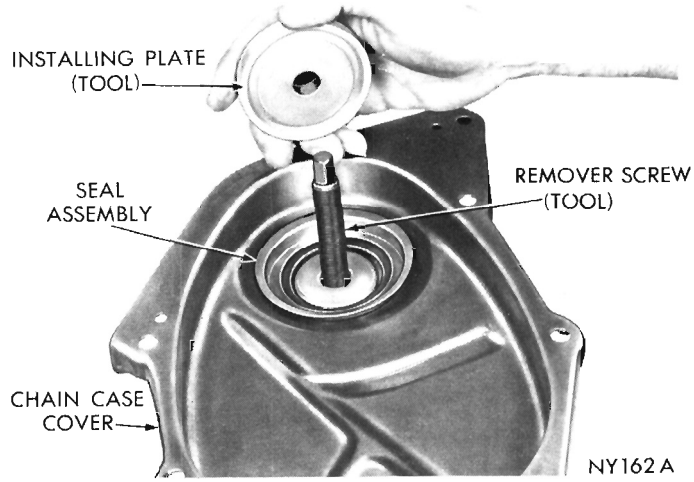

Fig. 27—Positioning Installer Plate

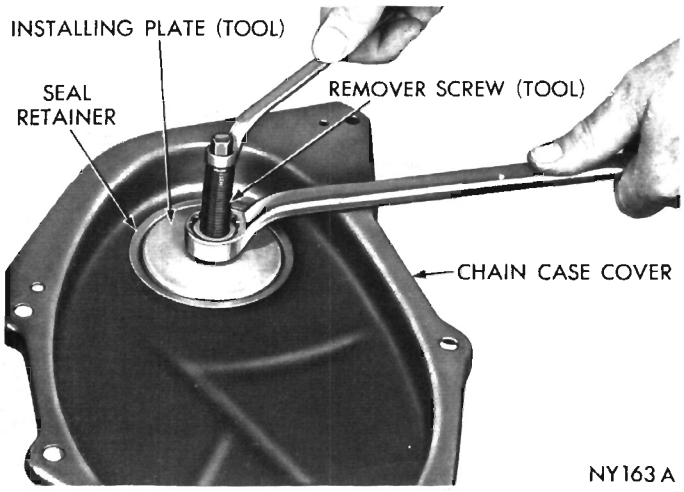

Fig. 28—Installing New Seal

tight against face of cover. Try to insert a .0015 inch feeler gauge between the neoprene and cover (Fig. 29) if the seal is installed properly, the feeler gauge cannot be inserted. **Do not over compress neoprene.**

Cover Installation

(1) Be sure mating surfaces of chain case cover and cylinder block are clean and free from burrs.

(2) Using a new gasket, slide chain case cover over locating dowels and tighten bolts to 15 foot-pounds. Be sure all oil pan gaskets are in place and tighten oil pan bolts to 200 inch-pounds.

(3) Place damper pulley assembly hub key in the slot in crankshaft, lubricate seal with Lubriplate and slide hub on the crankshaft.

(4) Place installing tool, part of puller set Tool C-3732A in position and press damper pulley assembly on the crankshaft (Fig. 30).

CAMSHAFT

The camshaft has an integral oil pump and distributor drive gear and fuel pump eccentric (Fig. 31).



Fig. 29—Inspecting Seal for Proper Seating

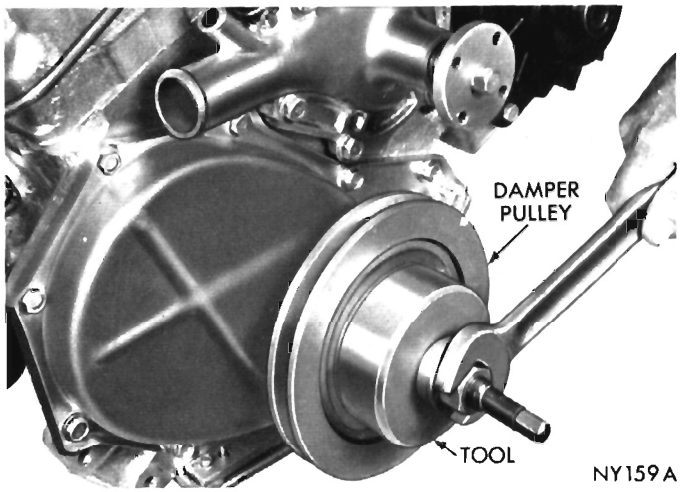

Fig. 30—Installing Vibration Damper Assembly

Rearward camshaft thrust is taken by the rear face of the aluminum camshaft sprocket hub, bearing directly on the front of the cylinder block, eliminating the need for a thrust plate.

The helical oil pump distributor drive gear and camshaft lobe taper both tend to produce only a rearward thrust.

Removal

(1) Remove tappets, using Tool C-3661.

(2) Remove timing sprockets, distributor and oil pump.

(3) Remove fuel pump.

(4) Install a long bolt into the front of camshaft to facilitate removal of the camshaft; remove camshaft, being careful not to damage cam bearings with the cam lobes.

Installation

(1) Lubricate camshaft lobes and camshaft bearing journals and insert the camshaft in cylinder block (Fig. 32).

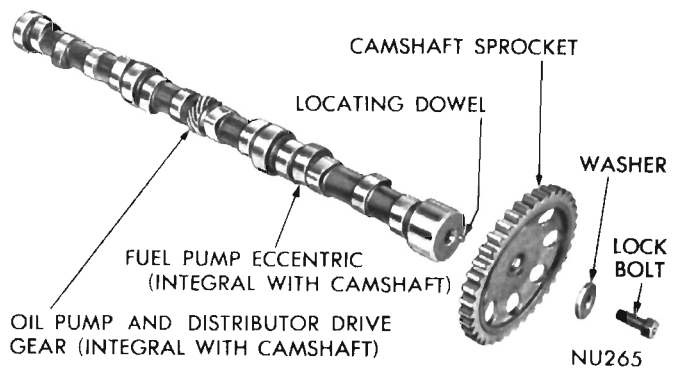

Fig. 31—Camshaft and Sprocket Assembly

Whenever an engine is rebuilt and/or a new camshaft and/or new tappets are installed, one quart of engine oil supplement, Chrysler Part Number 1879406 or equivalent should be added to the engine oil to aid in break-in. The oil mixture should be left in the engine for a minimum of 500 miles. Drain the oil mixture at the next normal oil change.

When replacing camshaft, all of the tappet faces must be inspected for crown with a straight edge. If any negative crown (dish) is observed, tappet must be replaced. The tappet must have a definite crown.

Installation of Distributor

Before installing the distributor, time the engine as follows:

The distributor rotates clockwise.

(1) Rotate crankshaft until the mark on inner edge of crankshaft pulley is in line with the "O" (TDC) mark on the timing chain case cover. No. 1 cyl. compression stroke (both valves closed).

(2) With distributor "O" rings in position, hold the distributor over mounting pad.

(3) Turn the rotor to point forward, corresponding to 4 o'clock.

(4) Install distributor so that with distributor fully seated on the engine, the gear has spiraled to bring the rotor to a 5 o'clock position.

(5) Turn the housing until the ignition contacts are separating and rotor is under No. 1 cap tower.

(6) Install hold down bolt and connect the primary wire.

(7) Adjust timing to specifications, using a timing light, then re-connect the vacuum line.

CAMSHAFT BEARINGS (Engine Removed from Vehicle)

Removal

(1) With camshaft removed, drive out rear cam bearing welch plug.

(2) Install proper size adapters and horse shoe washers (part of Tool C-3132A) at the back of each bearing shell and drive out all bearing shells.

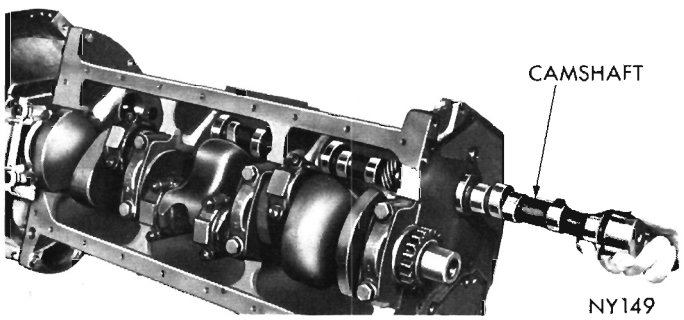

Fig. 32—Installing Camshaft

Installation

(1) Install new camshaft bearings with Tool C-3132A by sliding the new camshaft bearing shell over the proper adapter.

(2) Position bearing in tool. Install horseshoe lock and drive the bearing shell into place, (Fig. 33). **The camshaft bearing oil hole or holes must be in exact alignment with drilled oil passage or passages from the main bearing.**

(3) Install remaining shells in like manner. **Install NO. 1 camshaft bearing 3/32 inch inward from the front face of the cylinder block.**

(4) Apply sealer to a new welch plug and install at rear of camshaft. **Be sure this plug does not leak.**

CYLINDER BLOCK

Piston Removal

(1) Remove the top ridge of cylinder bores using Tool C-3012 before removing pistons from cylinder block. **Keep tops of the pistons covered during this operation.**

(2) Pistons and connecting rods must be removed from top of cylinder block. Rotate crankshaft so that each connecting rod is centered in the cylinder bore.

(3) Inspect connecting rods and connecting rod caps for cylinder identification. Identify them if necessary.

(4) Remove connecting rod cap. Install connecting rod bolt guide set on connecting rod bolts. Push each piston and rod assembly out of cylinder bore. **Be careful not to nick crankshaft journals.**

(5) Install bearing caps on mating rods.

Cleaning and Inspection

(1) Clean cylinder block thoroughly and check all core hole plugs for evidence of leaking.

(2) If new core plugs are installed, coat edges of plug and core hole with Number 105779 Sealer or equivalent. Drive the core plug in so that the rim lies at least 1/64" below the lead-in chamfer.

(3) Examine block for cracks or fractures.

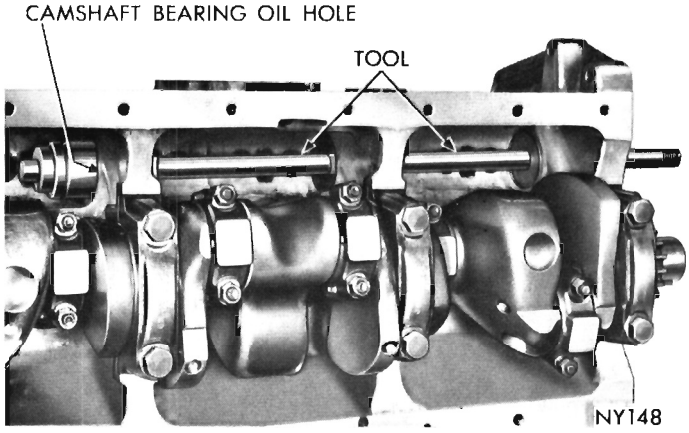

Fig. 33—Removing Camshaft Bearings (Tool C-3132A)

Cylinder Bore Inspection

The cylinder walls should be tested for out-of-round and taper with Tool C-119. If the cylinder bores show more than .005" out-of-round, or a taper of more than .010" or if the cylinder walls are badly scuffed or scored, the cylinder block should be rebored and honed, and new oversize pistons and rings fitted. Whatever type of boring equipment is used, boring and honing operation should be closely coordinated with the fitting of pistons and rings in order that specified clearance may be maintained.

Honing Cylinder Bores

Before honing, stuff plenty of clean rags under the bores, over the crankshaft to keep abrasive materials from entering crankcase area.

(1) Used carefully, the cylinder bore resizing hone Tool C-823, equipped with 220 grit stones, is the best tool for this job. In addition to deglazing, it will reduce taper and out-of-round as well as removing light scuffing, scoring or scratches. Usually a few strokes will clean up a bore and maintain the required limits.

(2) Deglazing of the cylinder walls may be done using a cylinder surfacing hone, Tool C-3501, equipped with 280 grit stones (C-3501-3810). If the cylinder bore is straight and round 20-60 strokes depending on the bore condition will be sufficient to provide a satisfactory surface. Inspect cylinder walls after each 20 strokes. Use honing oil C-3501-3880 or a light honing oil available from a major oil distributor. **Do not use engine or transmission oil, mineral spirits or kerosene.**

(3) Honing should be done by moving the hone up and down fast enough to get a cross-hatch pattern. When hone marks intersect at 60°, the cross hatch angle is most satisfactory for proper seating of the rings. (See Fig. 34).

(4) After honing, it is necessary that the block be cleaned again to remove all traces of abrasives. **CAUTION: Be sure all abrasives are removed from engine parts after honing. It is recommended that a solution of soap and water be used with a brush and the parts then thoroughly dried. The bore can be considered clean when it can be wiped clean with a white cloth and cloth remains clean. Oil bores after cleaning to prevent rusting.**

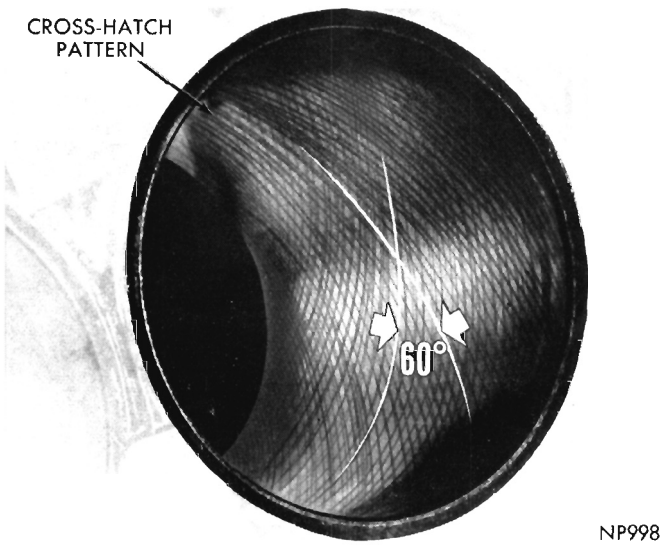

Fig. 34—Cross Hatch Pattern

PISTONS, PINS AND RINGS

The pistons are cam ground so that the diameter at the pin boss is less than its diameter across the thrust face. This allows for expansion under normal operating conditions. The expansion forces the pin bosses away from each other, and the piston assumes a more round shape. Inspect pistons for taper and elliptical shape before they are fitted into cylinder bores. (See Fig. 35).

Finished Pistons

All pistons are machined to the same weight in grams, regardless of oversize to maintain piston balance. For cylinder bores which have been honed or rebored, all service pistons include pins and are available in standard and the following oversizes: .005, .020, .040 inch.

Fitting Pistons

The piston and cylinder wall must be clean and dry. Specified clearance between the piston and cylinder wall is .0005 to .0015 inch.

(1) Pistons and cylinder bores should be measured at normal room temperature, 70 degrees F.

(2) Measure piston diameter at the top of skirt 90 degrees to piston pin axis.

(3) Measure cylinder bores halfway down cylinder bore and transverse to engine crankshaft center line.

Fitting Rings

(1) Measure piston ring gap about two inches from the bottom of the cylinder bore in which it is to be

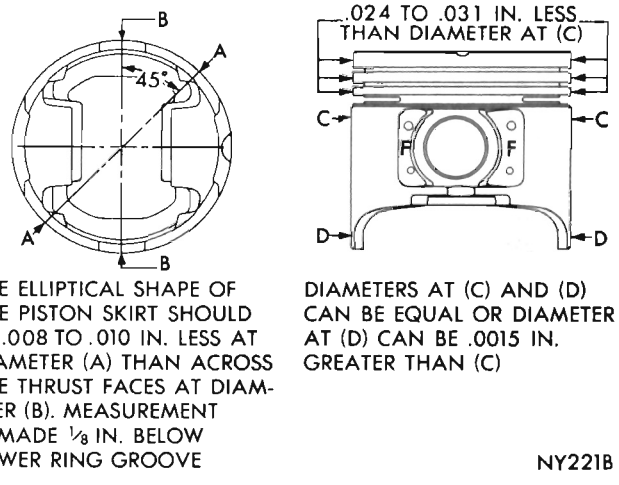

Fig. 35—Piston Measurements

fitted. (An inverted piston can be used to push rings down to insure positioning rings squarely in cylinder bore).

(2) Insert feeler stock in the gap. Ring gap should be .010 to .047 inch for compression rings and .015 to .062 inch for oil ring steel rails in standard size bores. Maximum gap in .005 inch o/s bores should be .060 inch for compression rings and .070 inch for oil ring steel rails.

(3) Measure side clearance between piston ring and ring land, (Fig. 36).

Clearance should be .0015 to .004 inch for top compression ring and intermediate ring.

(4) Starting with oil ring expander, place expander ring in lower ring groove and install oil control ring using instructions in package. Steel rail service oil ring should be free in groove, but should not exceed .005 inch side clearance.

(5) Install compression rings in middle and top grooves, using ring installer, Tool C-3805. Be sure the mark "TOP" on each compression ring is to the top of piston.

Piston Pin Removal

(1) Arrange Tool C-3724 parts for removal of piston pin (Fig. 37).

(2) Install pilot on main screw.

(3) Install screw through piston pin.

(4) Install anvil over threaded end of main screw with small end of anvil against piston boss. **Be sure spring is removed from anvil.**

(5) Install nut loosely on main screw and place assembly on the press (Fig. 38). Press piston pin out of connecting rod.

When the pin falls free from connecting rod, stop the press to prevent damage to bottom of the anvil.

(6) Remove tool from piston.

Installation

(1) Measure piston pin fit in the piston. It should be a sliding fit in piston at 70 degrees F. Piston pins are supplied in standard sizes only.

(2) Lubricate piston pin holes in piston and connecting rod.

(3) Arrange tool parts for installation of piston pin (Fig. 39).

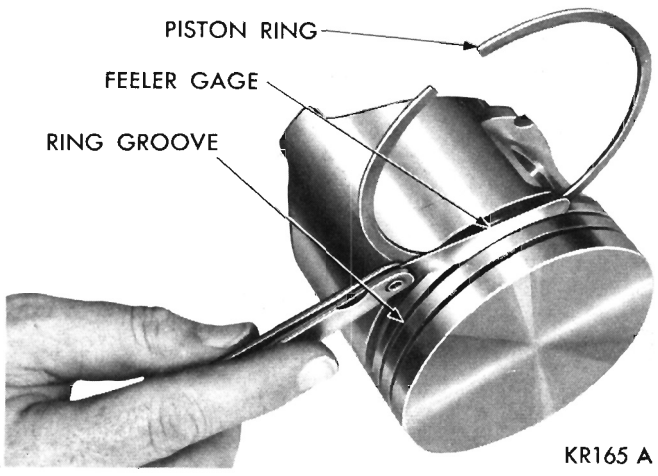

Fig. 36—Measuring Piston Ring Side Clearance

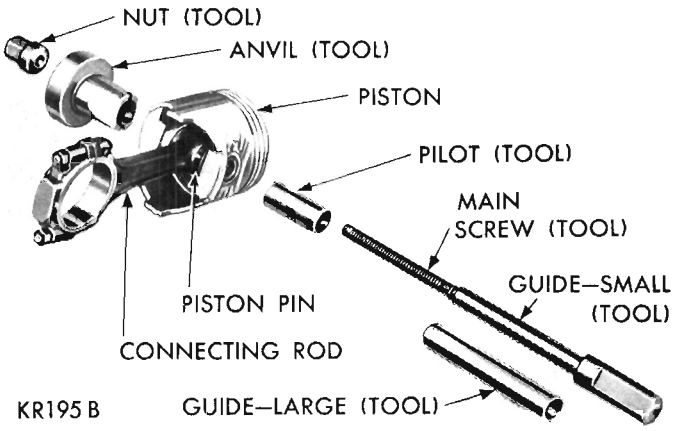

Fig. 37—Tool Arrangement for Removing Piston Pin

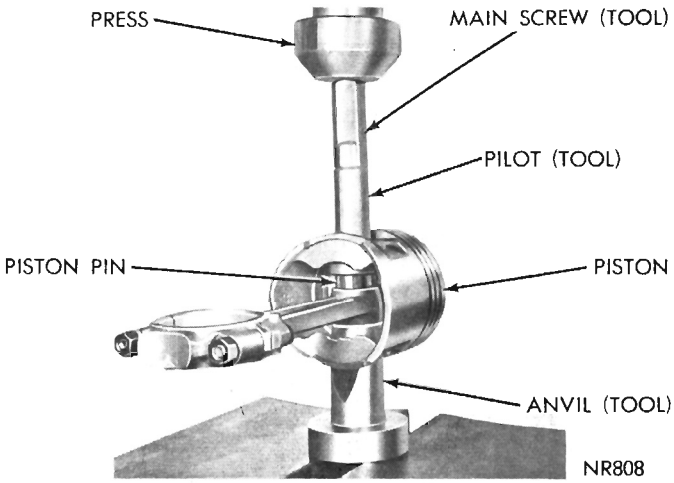

Fig. 38—Removing Piston Pin

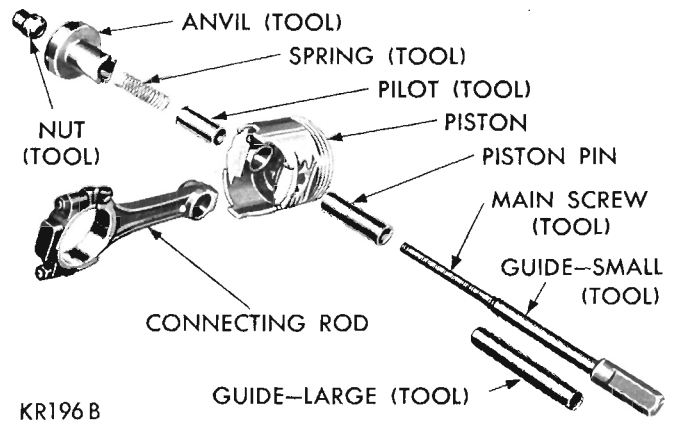

Fig. 39—Tool Arrangement for Installing Piston Pin

(4) Install spring inside the pilot and install spring and pilot in the anvil.

(5) Install piston pin over main screw.

(6) Place piston, with "Notch Front" up, over the pilot so that pilot extends through piston pin holes.

(7) Position connecting rod over the pilot which extends through piston hole. **The oil hole in connecting rod must point toward the direction shown in Figure 40.**

(8) Install main screw and piston pin in piston (Fig. 41).

(9) Install nut on main screw to hold assembly together. Place assembly on a press (Fig. 41).

(10) Press piston pin in the piston until pin bottoms on pilot, properly positioning pin in connecting rod.

(11) Remove tool and arrange tool parts and piston assembly in the same manner, as shown in Figure 37 for measuring pin fit.

(12) Place assembly in a vise (Fig. 42).

(13) Attach torque wrench to nut and test torque up to 15 foot-pounds. If connecting rod moves downward on the piston pin, reject this connecting rod and piston pin combination. Install a new connecting rod and repeat the installation and testing procedure.

If the connecting rod does not move under 15 foot-pounds, piston and connecting rod interference is satisfactory.

(14) Remove tool.

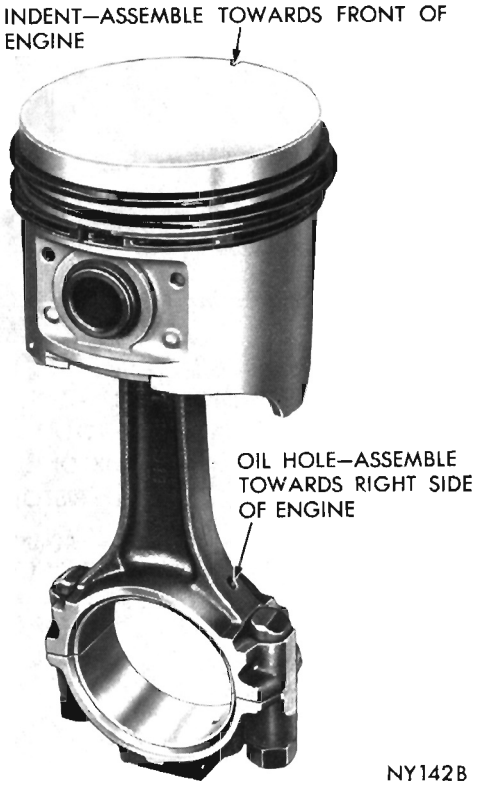

Fig. 40—Connecting Rod Oil Hole

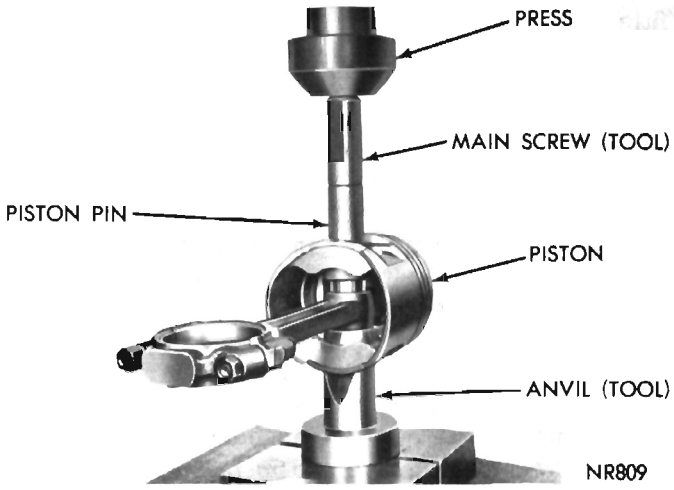

Fig. 41—Installing Piston Pin

CRANKSHAFT IDENTIFICATION

A Maltese Cross stamped on the engine numbering pad on right side of block, on top boss directly behind coil indicates that engine is equipped with a crankshaft which has one or more connecting rods and/or main bearing journals finished .001 inch undersize. The position of the undersize journal or journals is stamped on the center counterweight of crankshaft.

A Maltese Cross with an X indicates that all connecting rods and/or all main bearing journals are .010 inch undersize.

Connecting rod journals will be identified by the letter "R" and main bearing journals by the letter "M". For example "M-1" indicates that No. 1 main bearing is .001 inch undersize.

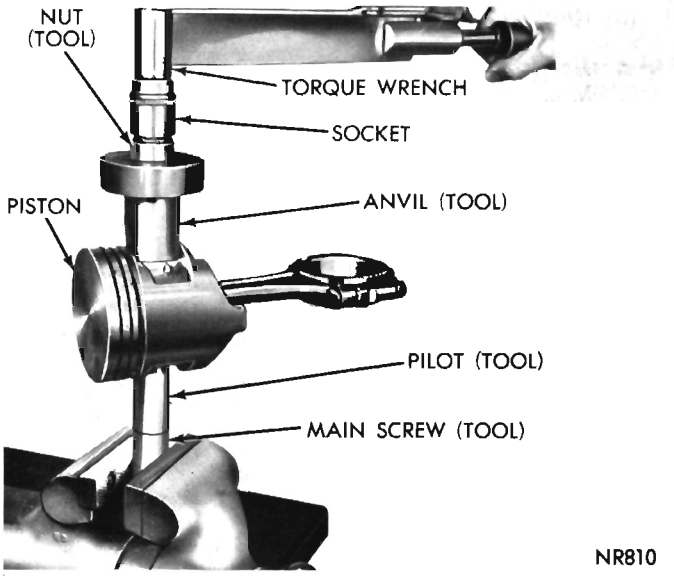

Fig. 42—Testing Fit of Piston Pin in Connecting Rod

CONNECTING RODS

Installing Connecting Rod Bearings

(1) Install connecting rod bearings so small formed tang fits into machined groove in connecting rod.

(2) The limits of taper or out-of-round on any crankshaft journal should be held to .001 inch. Bearings are available in standard .001, .002, .003, .010 and .012 inch undersize.

(3) Install bearings in pairs. **Do not use a new bearing with an old bearing. Do not file rods or bearing caps.**

MEASURING CONNECTING ROD BEARING CLEARANCE

Shim Stock Method

(1) Smooth the edges of a 1/2 x 3/4 inch piece of brass shim stock, .001 inch thickness.

(2) Oil and place between the bearing and connecting rod journal.

(3) Install bearing cap and tighten to 45 foot-pounds.

(4) Turn connecting rod 1/4 turn in each direction. A slight drag should be felt which indicates clearance is satisfactory. Correct clearance is from .0005 to .0015 inch.

(5) Side play should be from .006 to .012 inch.

INSTALLING PISTON AND CONNECTING ROD ASSEMBLY

(1) Compression ring gaps should be located on the left side of the engine and staggered about 60° apart. Neither gap should line up with oil ring rail gaps.

(2) Rotate oil ring expander so that ends are at right side of engine. Rotate steel rails so that gaps are approximately opposite and positioned above piston pin holes.

(3) Immerse piston head and rings in clean engine oil. Slide the ring compressor, Tool C-385, over the piston and tighten with special wrench (part of Tool C-385). **Position of rings must not change during this operation.**

(4) The notch on top of piston must point toward front of engine so that squirt hole in connecting rod is toward right side of engine.

(5) Install connecting rod bolt protectors on rod bolts, the long protector should be installed on squirt hole side of connecting rod. **Rotate crankshaft so that connecting rod journal is on the center of cylinder bore.**

(6) Insert rod and piston into cylinder bore and guide rod over the crankshaft journal (Fig. 43). Be careful not to nick connecting rod journals.

(7) Tap piston down in cylinder bore, using handle of a hammer. At the same time, guide connecting rod into position on crankshaft journal.

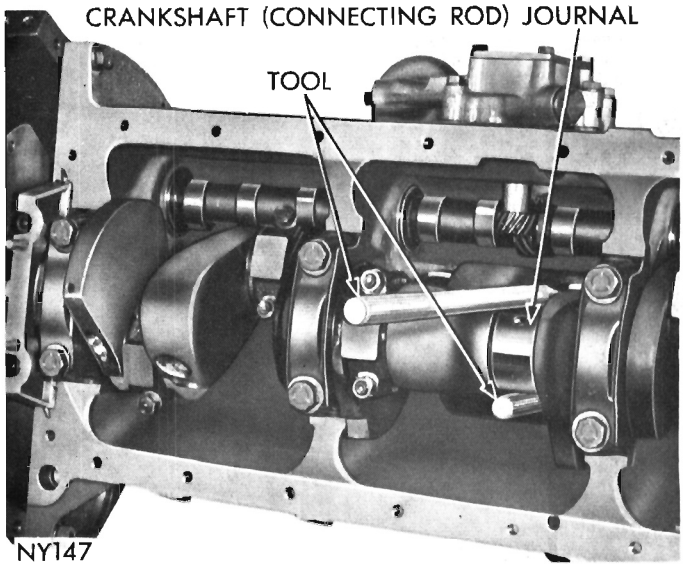

Fig. 43—Removing and Installing Connecting Rod

(8) Install rod caps, tighten nuts to 45 foot-pounds.

CRANKSHAFT MAIN JOURNALS

Crankshaft journals should be inspected for excessive wear, taper and scoring. Limits of taper or out-of-round on any crankshaft journal should be held to .001 inch. Journal grinding should not exceed .012 inch under the standard journal diameter. Do not grind thrust faces of No. 3 main bearing. Do not nick connecting rod or main bearing journal fillets. After regrinding, remove rough edges from crankshaft oil holes and clean out all oil passages.

CRANKSHAFT MAIN BEARINGS

The NOs. 1, 2 and 4 lower main bearings are interchangeable (Fig. 44). The NOs. 2 and 4 upper main bearings are interchangeable.

The NO. 1 upper main bearing **is not interchangeable and is chamfered** on the tab side for timing chain oiling and can be identified by a red marking on the edge of the bearing. Upper main bearings are grooved and lower main bearings are plain and are not **interchangeable.** The NO. 3 upper and lower main bearings are flanged to carry the crankshaft thrust loads and **are not interchangeable** with any other main bearings in the engine. **Bearings that are not badly worn, scored or pitted should be reinstalled in the same bearing bore.**

The bearing caps are not interchangeable and the numbers should be marked at removal to insure correct assembly. Bearings are available in standard and the following undersizes, .001, .002, .003, .010 and

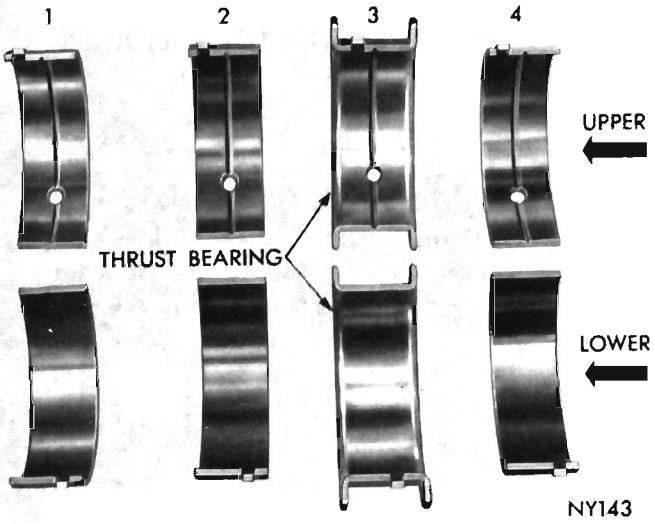

Fig. 44—Main Bearing Identification

.012 inch. Never install an undersize bearing that will reduce the clearance below specifications.

Removal

(1) Remove oil pan and inspect the bearing cap identifying numbers.

(2) Remove bearing caps one at a time. Remove upper half of bearing by inserting Tool C-3059 (Fig. 45) in the oil hole of crankshaft.

(3) Slowly rotate crankshaft clockwise, forcing out upper half of bearing shell.

Installation

Only one main bearing should be selectively fitted while all other main bearing caps are properly tightened.

When installing a new upper bearing shell, slightly chamfer the sharp edges from the plain side.

(1) Start bearing in place, and insert Tool C-3059 into oil hole of crankshaft (Fig. 45).

(2) Slowly rotate crankshaft counter-clockwise sliding the bearing into position. Remove Tool C-3059.

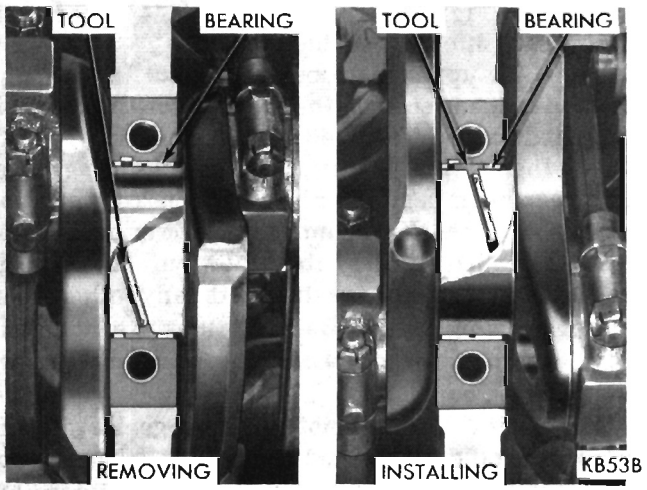

Fig. 45—Removing or Installing Upper Main Bearing

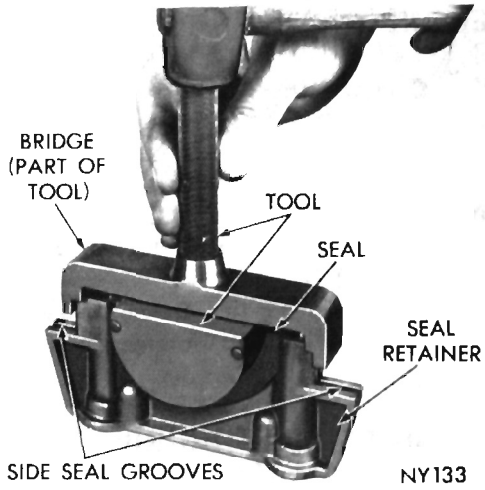

Fig. 46—Installing Rear Main Bearing Oil Seal

MEASURING MAIN BEARING CLEARANCE

Shim Stock Method

(1) Smooth edges of a 1/2 x 3/4 inch piece of brass shim stock, .001 inch thickness.

(2) Install bearing in center main bearing cap, **bearing tang in groove in cap,** lubricate bearing and position shim stock across the bearing, install cap, tighten bolts to 85 foot-pounds.

(3) If a slight drag is felt as crankshaft is turned (moved no more than 1/4 turn in either direction), clearance is .001 inch or less and is considered satisfactory.

If, however, no drag is felt, the bearing is too large or crankshaft cannot be rotated, bearing is too small and should be replaced with the correct size.

(4) Measure crankshaft end play .002 to .007 inch. If end play is less than .002 inch or more than .007 inch, install a new number 3 main bearing.

(5) Fit remaining bearings in same manner.

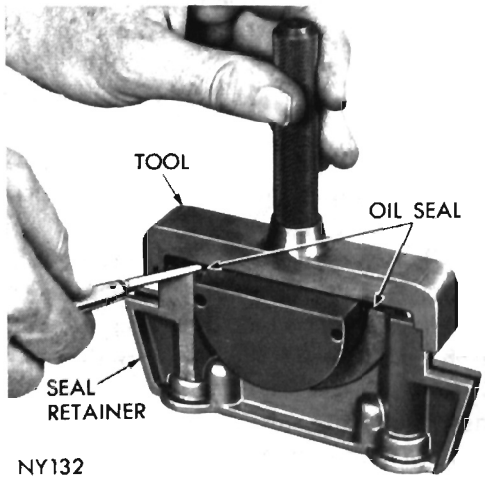

Fig. 47—Trimming Lower Rear Main Bearing Oil Seal

It is permissable to use one .001 inch undersize bearing shell with one standard bearing shell or one .002 inch undersize bearing shell with one .001 inch undersize shell. **Always use the smaller diameter bearing half as the upper. Never use an upper bearing half more than .001 inch smaller than the lower bearing half and never use a new bearing half with a used bearing half.**

REAR MAIN BEARING OIL SEAL (Crankshaft Removed)

Upper Seal

(1) Install a new oil seal in the cylinder block so that both ends protrude.

(2) Tap seal down into position, using Tool C-3743 (with bridge removed) until the tool is seated in the bearing bore.

(3) Hold tool in this position and cut off the portion of the seal that extends above the block on both sides.

Lower Seal

(1) Install a new seal in seal retainer so that ends protrude (Fig. 46).

(2) Install the bridge on the tool and tap seal down into position until tool is seated.

(3) Trim off portion of seal that protrudes above cap (Fig. 47).

(4) Install two side seals in grooves in seal retainer.

(5) When installing seal retainer, tighten screws to 30 foot-pounds.

ENGINE OILING SYSTEM (Fig. 48)

OIL PAN

Removal 170 or 225 Cubic Inch Engine (Valiant and Barracuda)

(1) Raise vehicle on hoist. Drain oil pan.

(2) Remove center link from steering arm and idler arm ball joints, see "Front Suspension". Remove motor mount stud nuts.

(3) Lower vehicle, disconnect negative ground cable, remove oil dipstick, air cleaner, fan shroud if so equipped.

(4) Install engine lifter plate Tool C-3804 and fix-

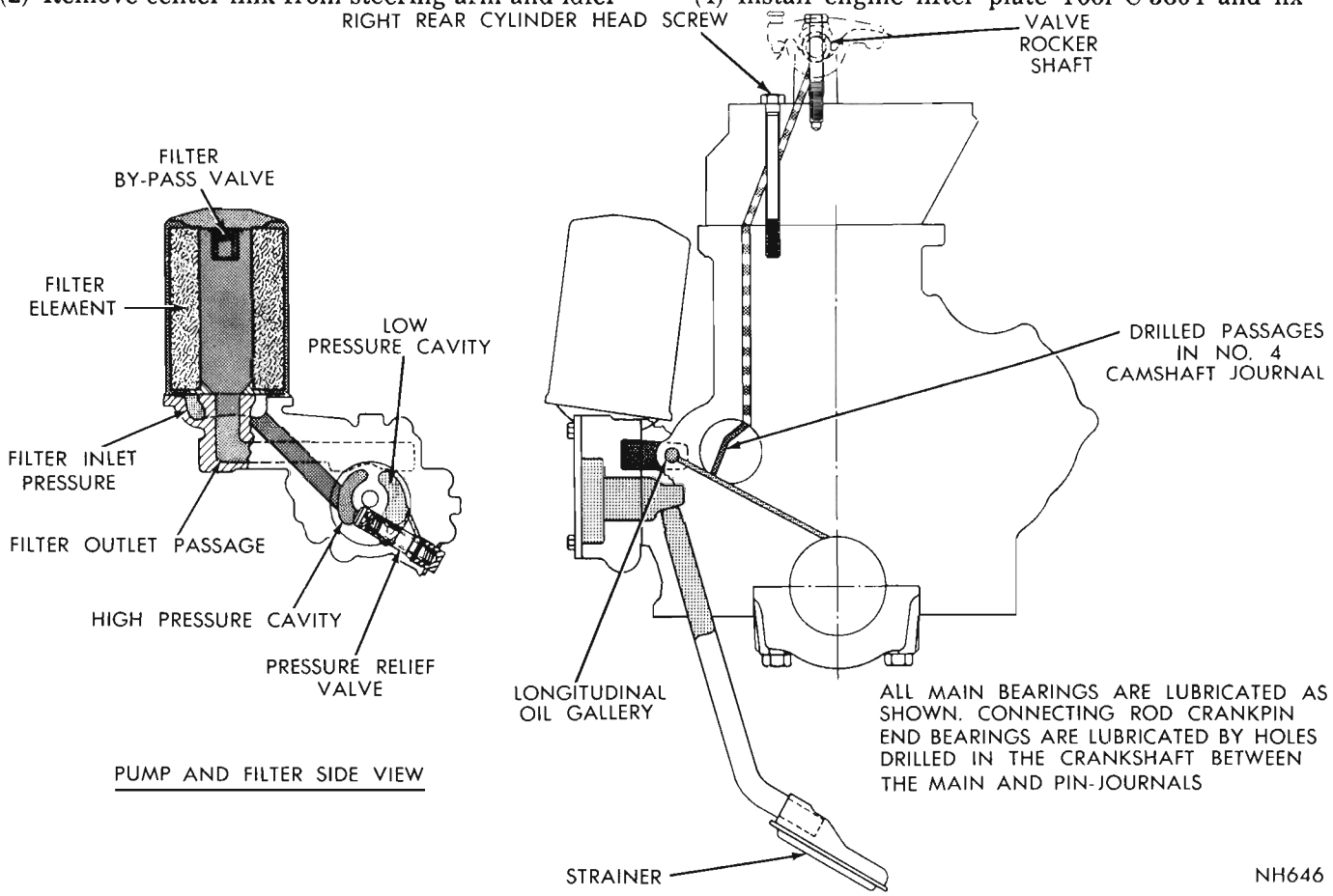

Fig. 48—Engine Oiling System

ture C-3809. Raise engine approximately 1-1/2 to 2 inches.

(5) Again raise vehicle on hoist. Remove oil pan attaching bolts, rotate engine crankshaft to clear counterweight and remove oil pan.

225 Cubic Inch Engine (Belvedere and Fury)

(1) Remove oil dipstick, disconnect negative ground cable. Raise vehicle on hoist and drain oil pan.

(2) Remove center link from steering arm and idler arm ball joints, see "Front Suspension".

(3) Disconnect exhaust pipe from manifold and tie out of way.

(4) Remove oil pan attaching bolts, rotate engine crankshaft to clear counterweights and remove oil pan.

Cleaning and Inspection

Clean oil pan in solvent and wipe dry with a clean cloth. Scrape all gasket material from mounting surface of pan and block.

Inspect oil drain plug and plug hole for stripped or damaged threads and repair as necessary. Install a new drain plug gasket. Tighten to 20 foot-pounds.

Inspect oil pan mounting flange for bends or distortion. Straighten flange if necessary.

Clean oil screen and pipe thoroughly in clean solvent. Inspect condition of screen.

Install oil screen and pipe. Turn pipe in until it begins to tighten in the crankcase, continue tightening until screen is positioned (Fig. 49). Hold a steel rule against flat surface inside the case and measure from edge of rule to edge of oil screen. Measurement should be 1-1/8 inches with screen properly positioned.

Screen must be an interference with bottom of oil pan.



Fig. 49—Positioning Oil Pick-up Tube and Screen

Installation

170 or 225 Cubic Inch Engine (Valiant and Barracuda)

(1) Using a new pan gasket, install oil pan and tighten bolts to 200 inch-pounds.

(2) Connect steering and idler arm ball joints to center link. Tighten retaining nuts to 40 foot-pounds, and secure with cotter pins.

(3) Lower vehicle on hoist, then lower the engine down into position. Remove lifting fixture and plate.

(4) Install fan shroud, oil dipstick and air cleaner.

(5) Again raise the vehicle on the hoist and install motor mount stud nuts. Tighten to 75 foot-pounds.

(6) Lower vehicle and fill crankcase to recommended level with proper grade of motor oil. Connect negative ground cable at battery.

225 Cubic Inch Engine (Belvedere and Fury)

(1) Using a new oil pan gasket set, install the oil pan and tighten bolts to 200 inch-pounds.

(2) Connect steering and idler arm ball joints to center link. Tighten retaining nuts to 40 foot-pounds and secure with cotter pins. Install dust shield.

(3) Install exhaust pipe to manifold, use a new gasket. Tighten to 35 foot-pounds.

(4) Lower vehicle install oil dipstick and fill crankcase to recommended level with proper grade of motor oil. Connect negative ground cable at battery.

OIL PUMP

Removal

(1) Drain radiator, disconnect upper and lower hoses. Remove fan shroud, if so equipped.

(2) Raise vehicle on hoist, support front of engine with a jack stand placed under the right front corner of engine oil pan. **(Do not support the engine at the crankshaft pulley or vibration damper.)** Remove front engine mount bolts.

(3) Raise engine approximately 1-1/2 to 2 inches.

(4) Remove oil filter, oil pump attaching bolts and remove pump assembly.

Installation

(1) Using new "O" rings, install oil pump and tighten to 200 inch-pounds.

(2) Lower engine to its original position, install front engine mount bolts.

(3) Connect upper and lower radiator hoses. Install fan shroud, if so equipped.

(4) Install oil filter.

(5) Refill radiator.

Disassembly (Fig. 50)

(1) Remove pump cover and seal ring.

(2) Press off drive gear. Support gear to keep the load off of aluminum body.

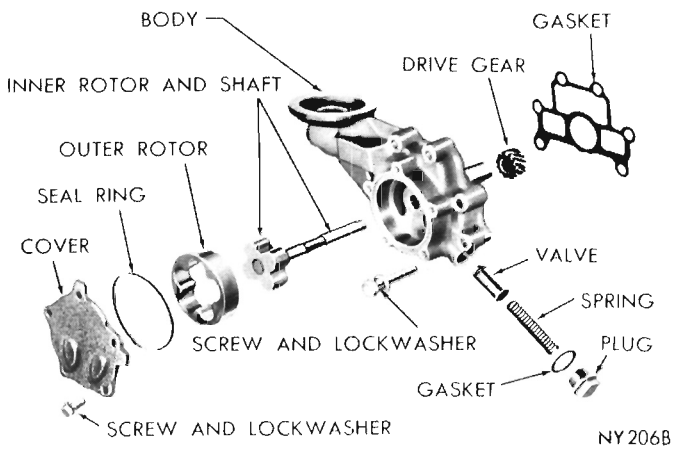

Fig. 50—Oil Pump Disassembled View

(3) Remove pump rotor and shaft and lift out outer pump rotor.

(4) Remove oil pressure relief valve plug and lift out spring and plunger.

Inspection and Repair

(1) Clean all parts thoroughly. Mating face of oil pump cover should be smooth. Replace cover if it is scratched or grooved.

(2) Lay a straightedge across the oil pump cover surface (Fig. 51). If a .0015 inch feeler gauge can be inserted between cover and straightedge, cover should be replaced.

(3) If outer rotor length measures less than .649 inch (Fig. 52), and the diameter less than 2.469 inches, replace outer rotor.

(4) If inner rotor length measures less than .649 inch (Fig. 53), replace inner rotor.

(5) Install outer rotor into pump body, pressing to one side with fingers and measure clearance between outer rotor and pump body (Fig. 54). If measurement is more than .012 inch, replace oil pump body.

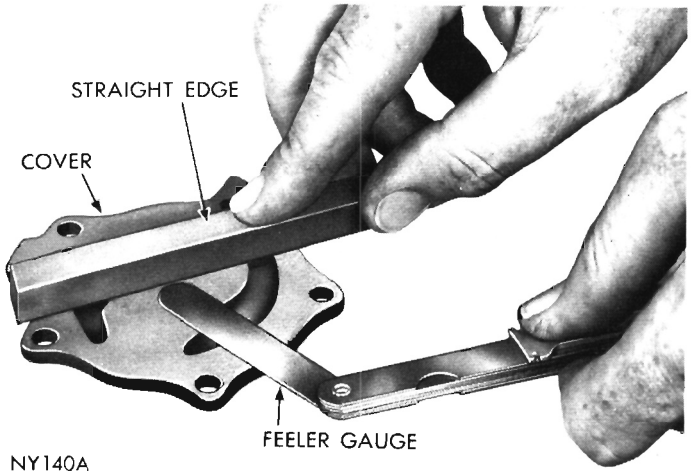

Fig. 51—Measuring Oil Pump Cover Flatness

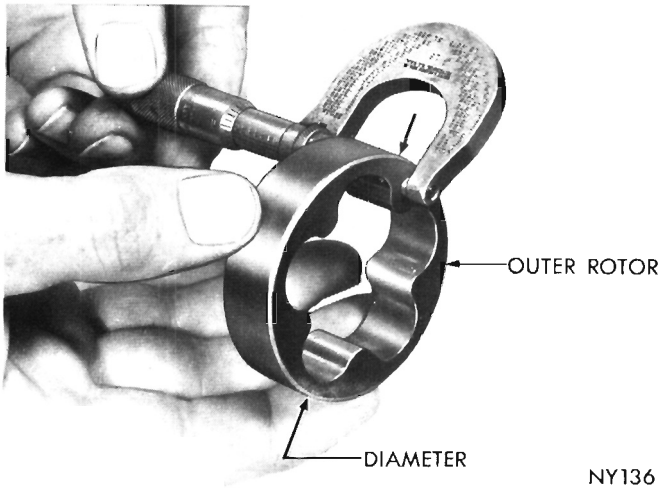

Fig. 52—Measuring Outer Rotor Thickness

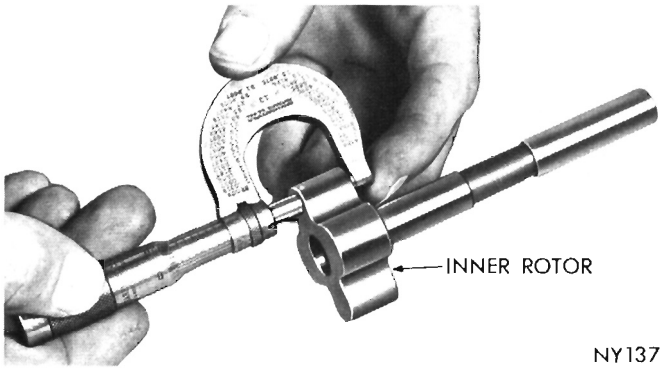

Fig. 53—Measuring Inner Rotor Thickness

(6) Install inner rotor into pump body and place a straightedge across face between bolt holes (Fig. 55). If a feeler gauge of more than .004 inch can be inserted between the rotors and straightedge, replace pump body.

(7) If clearance between inner rotor and outer rotor (Fig. 56) is more than .010 inch, replace inner and outer rotors.

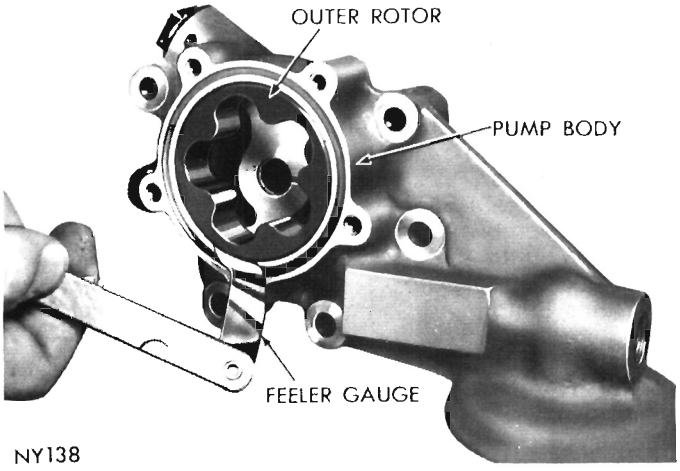

Fig. 54—Measuring Clearance Over Rotors

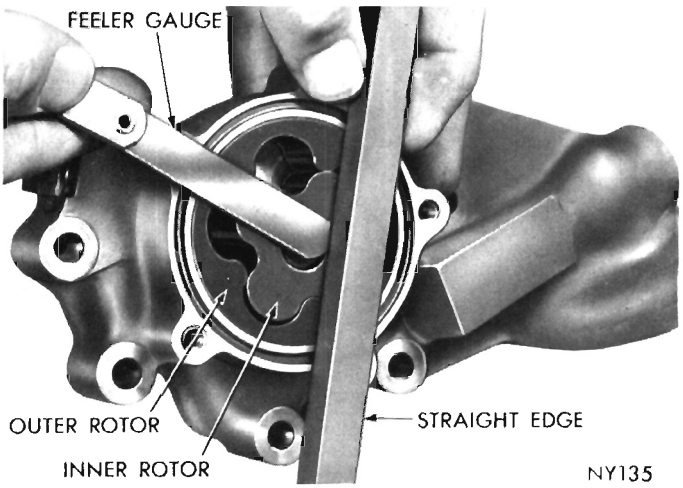

Fig. 55—Measuring Outer Rotor Clearance

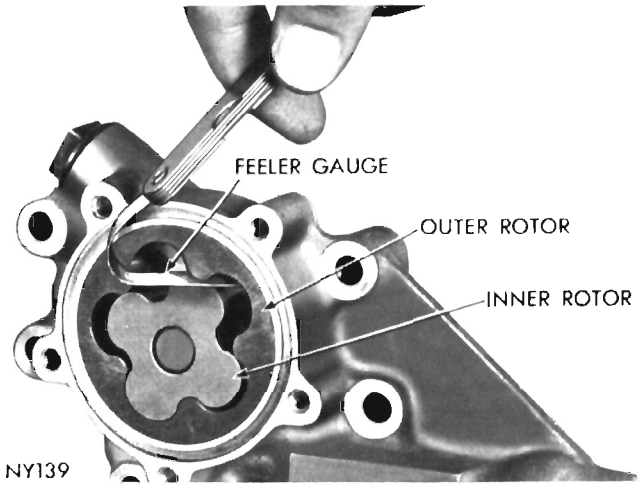

Fig. 56—Measuring Clearance Between Rotors

(8) Inspect oil pump relief valve plunger for scoring and for free operation in its bore. Small scores may be removed with 400 grit wet or dry paper.

(9) For 170-225 cubic inch engines the relief valve spring has a free length of 2-9/32 to 2-19/64 inch and should test 14.85 to 15.85 lbs. when compressed to 1/19-32 inch. Discard spring that fails to meet specifications.

(10) If oil pressure is low, inspect for worn bearings, or look for other causes of possible loss of oil pressure.

Assembly

(1) Assemble pump, using new parts as required.

(2) Install new oil seal rings between cover and body. Tighten cover bolts to 95 inch-pounds.

(3) Install the oil pump on engine. Tighten attaching bolts to 200 inch-pounds.

OIL FILTER

The oil filter should be replaced to coincide with every second oil change.

(1) Using Tool C-3845, unscrew filter from base of oil pump and discard.

(2) Wipe base clean.

(3) Screw new filter on the base until gasket on filter contacts base.

(4) To obtain an effective seal, tighten filter by **hand** the additional number of turns **indicated on the replacement filter.** Start engine and inspect for leaks.

EIGHT CYLINDER ENGINES

273-318-340 CUBIC INCH

INDEX

	Page		Page
Camshaft	35	Measuring Connecting Rod Bearing Clearance	39
Camshaft Bearings	36	Measuring Main Bearing Clearance	41
Connecting Rods	39	Oil Filter	24
Crankshaft Identification	39	Oil Pan	43
Crankshaft Main Bearings	40	Oil Pump	43
Crankshaft Main Journals	40	Pistons, Pins and Rings	38
Crankcase Ventilation System	84	Rear Main Bearing Oil Seal	41
Cylinder Block	37	Repair of Damaged or Worn Threads	85
Cylinder Heads	27	Rocker Arms and Shaft Assembly	27
Distributor Drive Shaft Bushing	36	Specifications	85
Engine Assembly	26	Timing Chain Cover, Oil Seal and Chain	33
Engine Mounts	25 & 26	Tune-Up	24
Hydraulic Tappets	31	Valves and Valve Springs	28
Installing Piston and Connecting Rod Assembly	39	Valve Timing	32

SERVICE PROCEDURES

TUNE-UP

(1) Test battery specific gravity, add water if necessary, clean and tighten battery connections.

(2) Test cranking voltage. See "Starting Motor Cranking Voltage" Electrical Section of this manual.

(3) Tighten the intake manifold bolts to specifications.

(4) Perform cylinder compression test. Compression should not vary more than 20 pounds.

(5) Clean or replace spark plug as necessary and adjust gap to .035 inch. Tighten to 30 foot-pounds using new gaskets.

(6) Test resistance of spark plug cables. Refer to "Ignition System Secondary Circuit Inspection" Electrical Section.

(7) Inspect the breaker plate contacts, primary wire and vacuum advance operation. Test coil output voltage, primary and secondary resistance. Test Condenser. Replace parts as necessary. Refer to Ignition System and make necessary adjustments.

(8) Reset ignition timing and vacuum advance line disconnected. Ignition timing should be set to compensate for altitudes and/or gasoline grades.

(9) Set carburetor idle mixture adjustment. Adjust throttle stop screw to specifications. Perform a combustion analysis.

(10) Test fuel pump for pressure and vacuum. Refer to "Fuel System" Group 14, Specifications.

(11) Inspect manifold heat control valve in the right exhaust manifold for proper operation and apply Manifold Heat Control Valve Solvent Part Number 2525054 or equivalent to the bushing and shaft.

(12) Every 6 months, remove air cleaner filter element and blow out dirt gently with air hose. Direct air from inside out, and keep nozzle 2 inches away from element to avoid damaging. Clean metal housing and replace element (Fig. 1). Every two years, install a new factory recommended filter element or equivalent. Service unit more frequently when driving under severe conditions, such as in dusty areas.

(13) Inspect crankcase ventilation system as outlined on page 84.

(14) Inspect and adjust accessory belt drives referring to "Cooling System," Group 7, for proper adjustments.

(15) Road test vehicle as a final test.

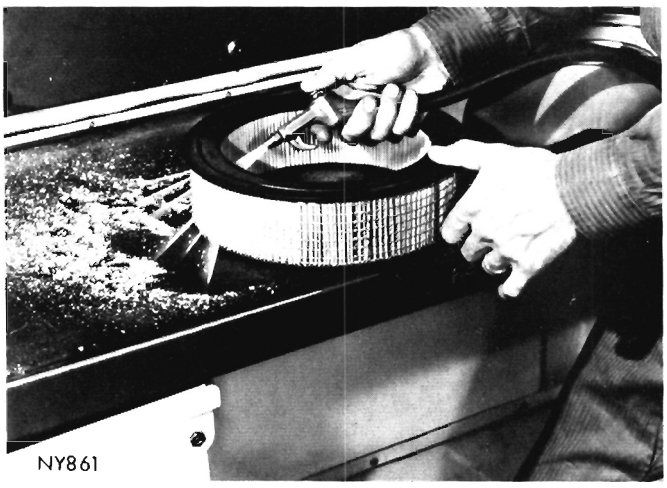

Fig. 1—Cleaning Filter Element

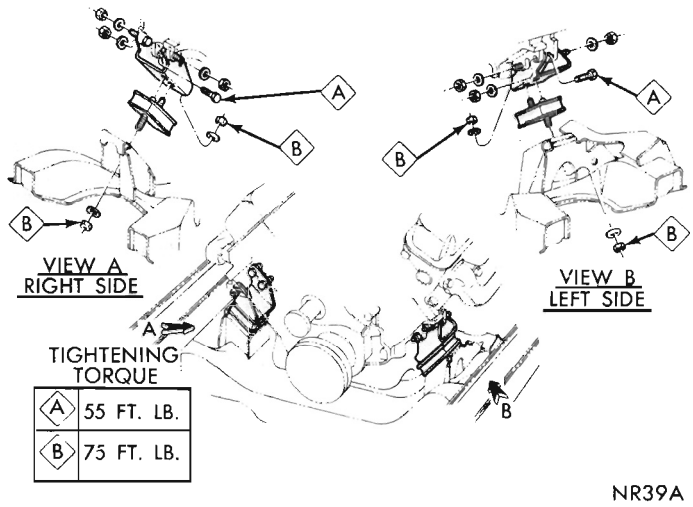

Fig. 2—Front Engine Mounts—273-318 Cubic Inch Valiant & Barracuda

FRONT ENGINE MOUNTS (Figs. 2, 3 and 4)

Removal

(1) Disconnect throttle linkage at transmission and at carburetor.

(2) Raise hood and position fan to clear radiator hose and radiator top tank.

(3) Remove torque nuts from insulator studs.

(4) Raise engine just enough to remove front engine mount assembly.

Installation

(1) Install insulator to engine bracket and tighten as specified.

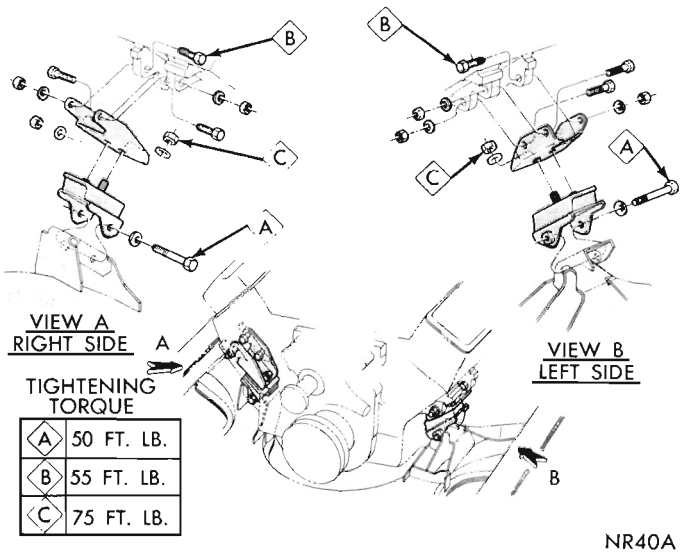

Fig. 3—Front Engine Mounts—318 Cubic Inch—Satellite and Fury

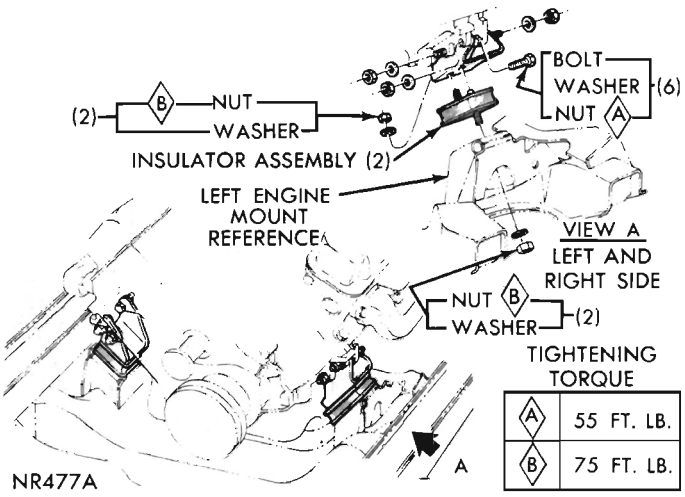

Fig. 4—Front Engine Mounts—340 Cubic Inch Barracuda

(2) Lower engine and install washers and prevailing torque nuts to insulator studs; tighten nuts as specified.

(3) Connect throttle at transmission and carburetor.

REAR ENGINE MOUNTS (Figs. 5, 6, 7 and 8)

Removal

(1) Raise vehicle on hoist.

(2) Install transmission jack.

(3) Remove rear engine crossmember from frame and remove rear mount.

Installation

(1) Install rear engine mount to crossmember and tighten nut as specified.

(2) Install rear crossmember to frame and tighten bolts as specified.

(3) Remove transmission jack.

(4) Install rear engine mount to transmission bolts and tighten as specified.

(5) Lower vehicle.

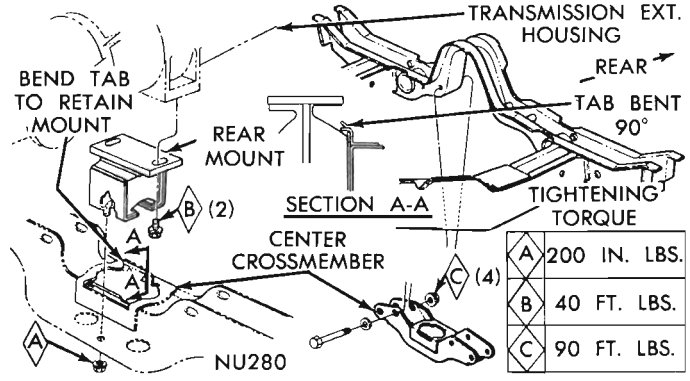

Fig. 5—Engine Rear Support—Valiant-Barracuda

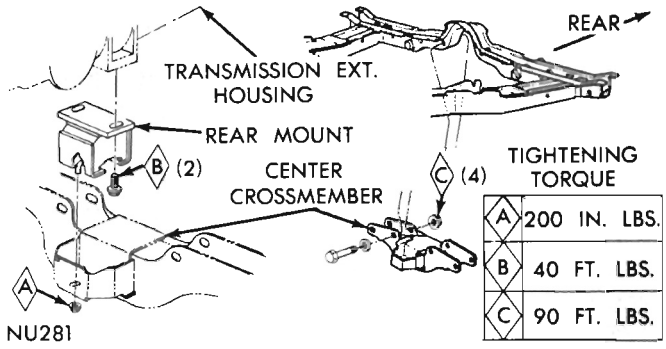

Fig. 6—Engine Rear Support—Satellite except with 4 Speed Transmission

ENGINE ASSEMBLY

Removal

(1) Scribe outline of hinge brackets on the hood to assure proper adjustment when installing. Remove hood.

(2) Drain cooling system and remove battery.

(3) Remove all hoses, fan shroud (if so equipped), oil cooler lines and radiator.

(4) Disconnect fuel lines, linkage and wires attached to engine, remove air cleaner and carburetor.

(5) Attach engine lifting fixture to carburetor flange studs on intake manifold.

(6) Raise vehicle on a hoist and install engine support fixture Tool C-3487 on the chassis to support rear of engine.

(7) Drain transmission and torque converter.

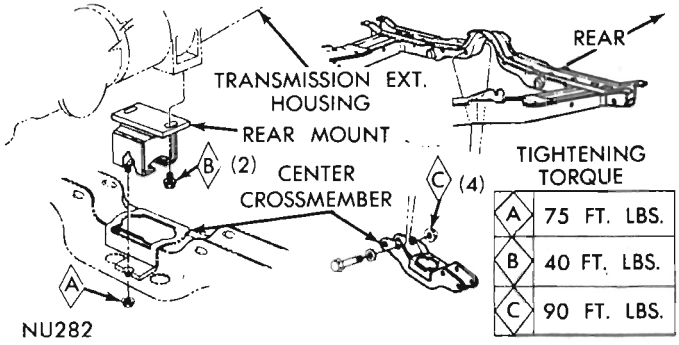

Fig. 7—Engine Rear Support—Satellite with 4 Speed Transmission

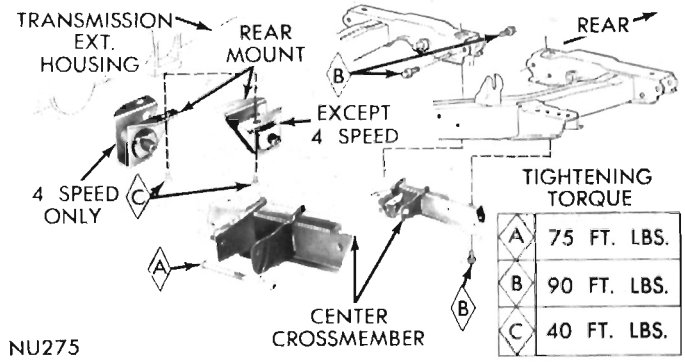

Fig. 8—Engine Rear Support—Fury

(8) Disconnect exhaust pipes at the manifolds, propeller shaft, wires linkage, speedometer cable, and oil cooler lines at transmission.

(9) Remove engine rear support crossmember and remove transmission from vehicle.

(10) Lower vehicle and attach a crane or other suitable lifting tool to fixture eyebolt.

(11) Remove engine front mounts. Raise engine with lifting tool and work engine out of chassis.

(12) Place engine in repair stand C-3167 and adapter C-3662 for disassembly using transmission mounting bolts.

Installation

(1) Attaching engine lifting fixture to carburetor flange studs on intake manifold.

(2) Attach a crane or other suitable lifting tool to fixture eyebolt.

(3) Remove engine from repair stand and lower engine carefully until engine is positioned in the chassis with front engine mounts in place.

(4) Install engine support fixture Tool C-3487 on chassis to support rear of engine. Remove the crane or lifting tool.

(5) Raise vehicle on a hoist, install the transmission, engine rear support crossmember, tighten front engine mounts, remove the engine support fixture, Tool C-3487.

(6) Connect propeller shaft, wires, linkage, speedometer cable, oil cooler lines at transmission, connect exhaust pipes to manifolds. Install transmission filler tube.

(7) Lower vehicle and remove engine lifting fixture from engine. Install carburetor and fuel lines.

(8) Install radiator, fan shroud, hoses, oil cooler lines and connect all wires and linkage.

(9) Install hood using scribe marks for proper alignment.

(10) Close all drain cocks and fill cooling system, install battery.

(11) Fill engine crankcase and transmission. Refer to "Lubrication" Group 0, for quantities and lubricants to use. Inspect entire system for leaks and correct as necessary.

Whenever an engine has been rebuilt and/or a new camshaft and/or tappets are installed, one quart of engine supplement, Chrysler Part Number 1879406 or equivalent should be added to the engine oil to aid in break-in. The oil mixture should be left in the engine for a minimum of 500 miles. Drain the oil mixture at the next normal oil change.

(12) Start engine and run until normal operating temperature is reached.

(13) Test timing (with vacuum advance line removed) and adjust carburetor and transmission linkage as necessary. Connect vacuum lines, install air cleaner and road test the vehicle.

ROCKER ARMS AND SHAFT ASSEMBLY

Removal

(1) Disconnect spark plug wires by pulling on the boot straight out in line with plug.

(2) Disconnect closed ventilation system from cylinder head cover.

(3) Remove cylinder head cover and gasket.

(4) Remove five rocker shaft bolts and retainers.

(5) Remove rocker arms and shaft assembly.

Installation

(1) Install rocker arm and shaft assemblies with "NOTCH" on end of rocker shaft pointing to centerline of engine and toward front of engine on the left bank and to the rear on right bank, making sure to install the long stamped steel retainers in the number two and four positions, tighten to 30 foot-pounds.

(2) Install cylinder head cover and tighten to 40 inch-pounds.

(3) Install closed crankcase ventilation system.

CYLINDER HEADS

The chrome alloy cast iron cylinder heads shown in Figure 9 are held in place by 10 bolts. The spark plugs are located in peak of the wedge between the valves.

Removal

(1) Drain cooling system and disconnect battery ground cable.

(2) Remove alternator, carburetor air cleaner and fuel line.

(3) Disconnect accelerator linkage.

(4) Remove vacuum control hose between carburetor and distributor.

(5) Remove distributor cap and wires.

(6) Disconnect coil wires, heat indicator sending unit wire, heater hoses and by-pass hose.

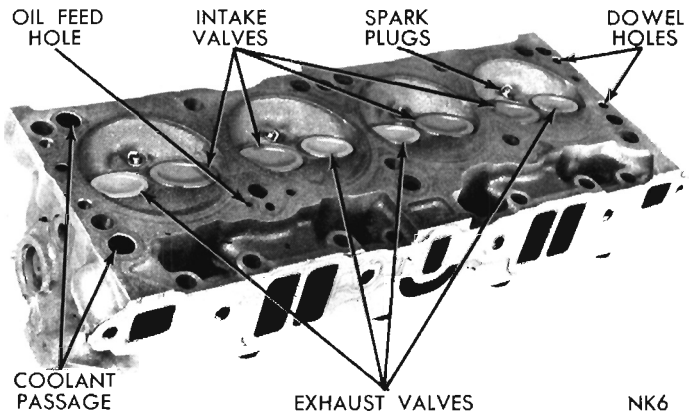

Fig. 9—Cylinder Head Assembly

(7) Remove closed ventilation system and cylinder head covers.

(8) Remove intake manifold, ignition coil and carburetor as an assembly.

(9) Remove exhaust manifolds.

(10) Remove rocker arm and shaft assemblies. Remove push rods and **identify to insure installation in original location.**

(11) Remove the 10 head bolts from each cylinder head and remove cylinder heads.

(12) Place cylinder heads in holding fixture Tool C-3626. Remove spark plugs.

Installation

(1) Clean all gasket surfaces of cylinder block and cylinder heads.

(2) Inspect all surfaces with a straightedge if there is any reason to suspect leakage.

(3) Coat new gaskets lightly with number 1057794 Sealer and install on cylinder block.

(4) Remove cylinder heads from holding fixtures Tool C-3626 and place heads on engine.

(5) Install cylinder head bolts. Starting at top center, tighten all cylinder head bolts to 50 foot-pounds in sequence, as shown in Figure 10. Repeat procedure, retighten all cylinder head bolts to 85 foot-pounds **on 273-318 Cubic Inch Engine and 95 foot-pounds on 340 Cubic Inch Engine.**

(6) Install push rods, rocker arm and shaft assemblies with the "NOTCH" on the end of rocker shaft pointing to centerline of engine and toward front of engine on the left bank and to the rear on right bank, making sure to install the long stamped steel retainers in the number two and four positions, tighten to 30 foot-pounds.

(7) Inspect push rods and replace worn or bent rods.

(8) Coat intake manifold side gaskets lightly with number 1057794 sealer or equivalent and end gaskets with 1316241 sealer or equivalent. Install intake manifold gaskets with the bead down and end seals locked in the tangs of head gasket. Add a drop of sealer in the "V" notches at ends of side seals after installation.

(9) Position intake manifold on engine and install the twelve attaching cap screws "Finger Tight." Tighten cap screws one through four to 25 foot-pounds and tighten remaining cap screws to 25 foot-pounds, in the tightening sequence shown in Figure 11, then retighten cap screws one through four to 35 foot-pounds and follow by retightening the remaining cap screws to 35 foot-pounds in sequence shown.

(10) Install exhaust manifolds with new gaskets, the extended shield is used on left side, tighten to 30 foot-pounds.

(11) Adjust spark plugs to .035 inch gap and install the plugs tightening to 30 foot-pounds.

(12) Install coil wires, heat indicator sending unit wire, heater hoses and by-pass hose.

(13) Install vacuum control hose between carburetor and distributor.

(14) Install accelerator linkage and adjust as necessary.

(15) Install distributor cap and wires.

(16) Install fuel line, alternator and drive belt. Tighten alternator mounting bolt to 30 foot-pounds and adjusting strap bolt to 200 inch-pounds. See Cooling Section on adjusting belt tension.

(17) Place new cylinder head cover gaskets in position and install cylinder head covers. Tighten to 40 inch-pounds.

(18) Install closed crankcase ventilation system.

(19) Fill cooling system and install battery ground cable.

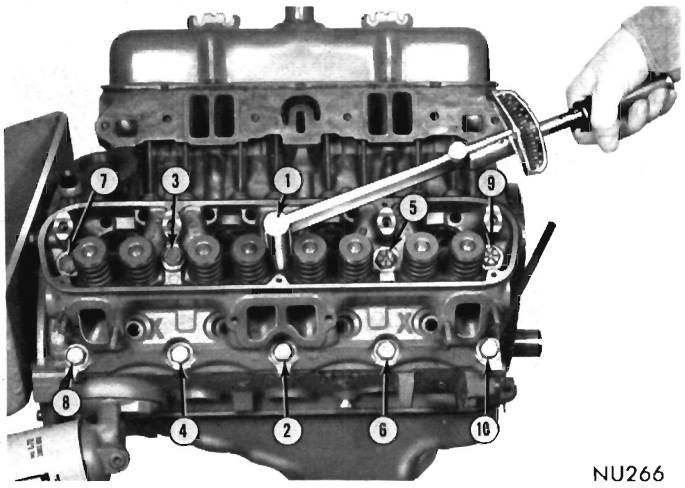

Fig. 10—Cylinder Head Tightening Sequence

VALVES AND VALVE SPRINGS

The valves are arranged in-line in the cylinder heads and inclined 18 degrees. The rocker shaft support and the valve guides are cast integral with the heads.

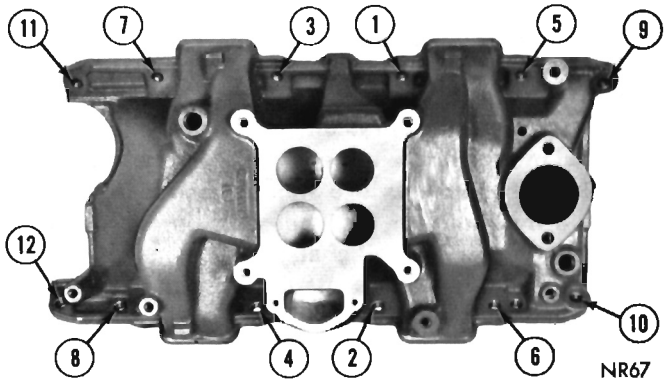

Fig. 11—Intake Manifold Tightening Sequence (Typical) 340 Cubic Inch Shown

Removal

(1) With cylinder head removed, compress valve springs using Tool C-3422A, as shown in Fig. 12.

(2) Remove valve retaining locks, valve spring retainers, valve stem cup seals and valve springs.

(3) Before removing valves, **remove any burrs from valve stem lock grooves to prevent damage to the valve guide. Identify valves to insure installation in original location.**

Valve Inspection

(1) Clean valves thoroughly and discard burned, warped and cracked valves.

(2) Measure valve stems for wear. New intake valve stem diameter should measure .372 to .373 inch and exhaust valve stem diameter should measure .371 to .372 inch. If wear exceeds .002 inch, replace valve.

(3) Remove carbon and varnish deposits from inside of valve guides with cleaner, Tool C-756.

(4) Measure valve stem guide clearance as follows:

(a) Install sleeve Tool C-3973 over valve stem (Fig. 13) and install valve. The special sleeve places the valve at the correct height for checking with a dial indicator.

(b) Attach dial indicator Tool C-3339 to cylinder head and set it at right angle of valve stem being measured (Fig. 14).

(c) Move valve to and from the indicator. The total dial indicator reading should not exceed .017 inch. Ream the guides for valves with oversize stems if dial indicator reading is excessive or if the stems are scuffed or scored.

(5) Service valves with oversize stems are available in .005, .015 and .030 inch oversize. Reamers to accommodate the oversize valve stem are as follows:

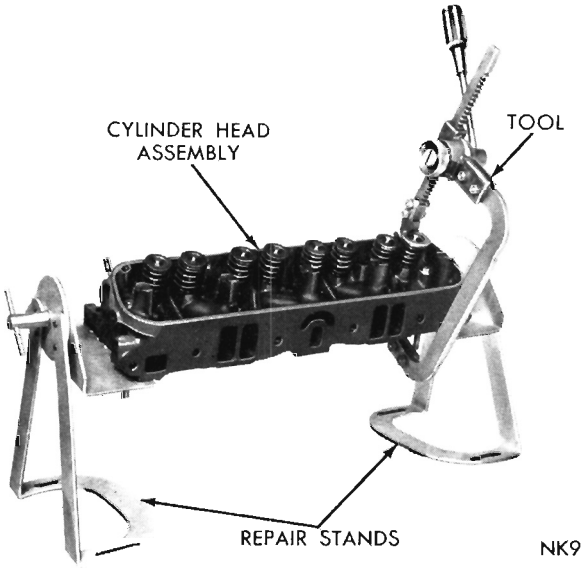

Fig. 12—Compressing Valve Spring

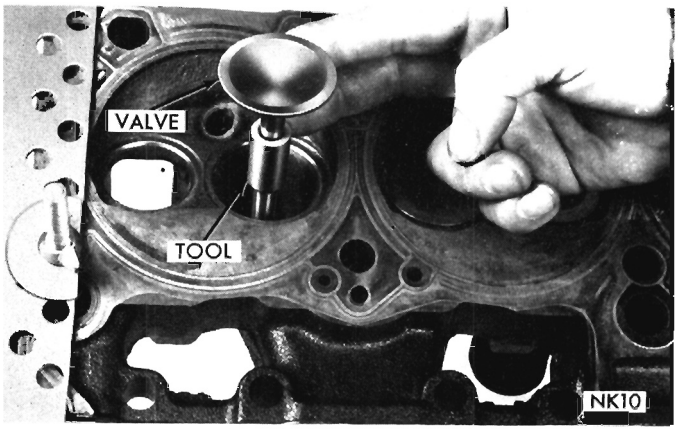

Fig. 13—Installing Valve and Tool C-3973

Reamer Tool Number	Reamer Oversize	Valve Guide Size
C-3433	.005 in.	.379-.380 in.
C-3430	.015 in.	.389-.390 in.
C-3427	.030 in.	.404-.405 in.

(6) Slowly turn reamer by hand and clean guide thoroughly before installing new valve. **Do not attempt to ream the valve guides from standard directly to .030 inch. Use step procedure of .005, .015 and .030 inch so the valve guides may be reamed true in relation to the valve seat.**

Refacing Valves and Valve Seats

(1) The intake and exhaust valve seats and intake valve face have a 45 degree angle. The exhaust valve face has a 43 degree angle. The valve face and valve seat angles are shown in Figure 15.

(2) Inspect the remaining margin after the valves are refaced (Fig. 16). Valves with less than 3/64 inch margin should be discarded.

(3) When refacing valve seats, it is important that the correct size valve guide pilot be used for reseating

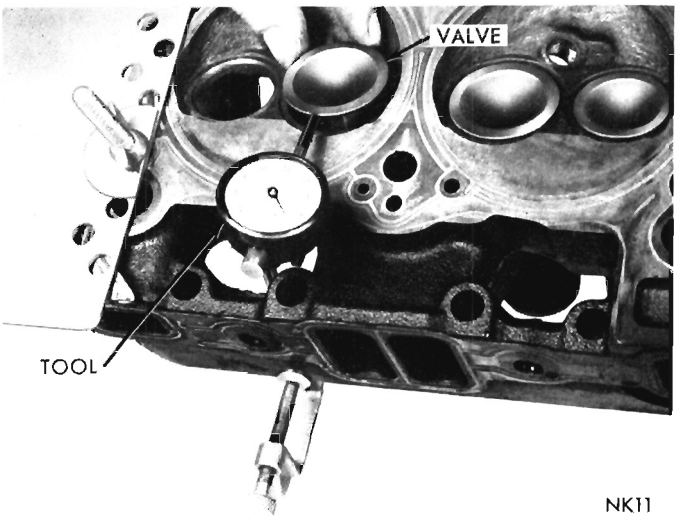

Fig. 14—Measuring Valve Guide Wear

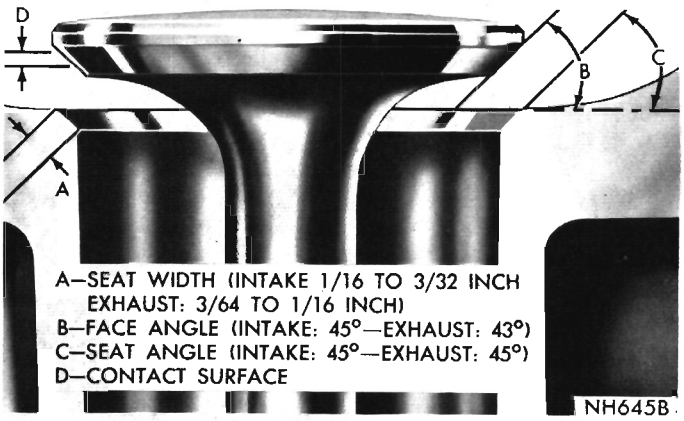

Fig. 15—Valve Face and Seat Angle

stones. A true and complete surface must be obtained.

(4) Measure the concentricity of valve seat using dial indicator No. 13725. Total runout should not exceed .002 inch (total indicator reading).

(5) Check the valve seat with Prussian blue to determine where the valve contacts the seat. To do this, coat valve seat lightly with Prussian blue then set valve in place. Rotate the valve with light pressure. If the blue is transferred to the center of valve face, contact is satisfactory. If the blue is transferred to top edge of valve face, lower valve seat with a 30° stone. If the blue is transferred to bottom edge of valve face raise valve seat with a 60° stone.

(6) When seat is properly positioned the width of intake seats should be 1/16 to 3/32 inch. The width of the exhaust seats should be 3/64 to 1/16 inch.

Testing Valve Springs (Fig. 17)

(1) Whenever valves have been removed for inspection, reconditioning or replacement, valve springs should be tested. As an example the compression length of the spring to be tested is 1-5/16 inches. Turn table of Tool C-647 until surface is in line with the

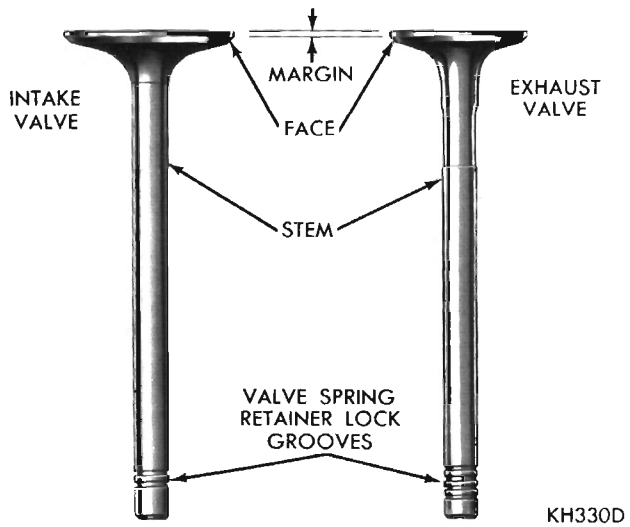

Fig. 16—Intake and Exhaust Valves

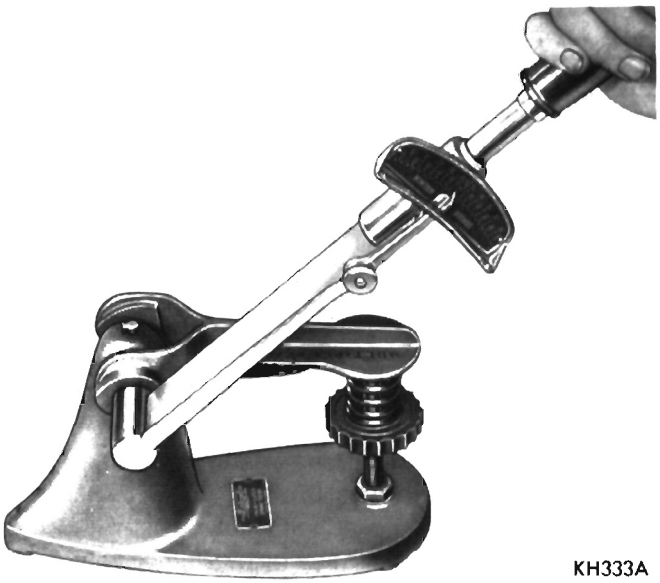

Fig. 17—Testing Valve Springs

1-5/16 inch mark on the threaded stud and the zero mark to the front. Place spring over stud on the table and lift compressing lever to set tone device. Pull on torque wrench until ping is heard. Take reading on torque wrench at this instant. Multiply this reading by two. This will give the spring load at test length. Fractional measurements are indicated on the table for finer adjustments. Refer to specifications to obtain specified height and allowable tensions. Discard the springs that do not meet specifications.

(2) Inspect each valve spring for squareness with a steel square and surface plate, test springs from both ends (Fig. 18).

If the spring is more than 1/16 inch out of square, install a new spring.

Installation

(1) Coat valve stems with lubrication oil and insert them in cylinder head.

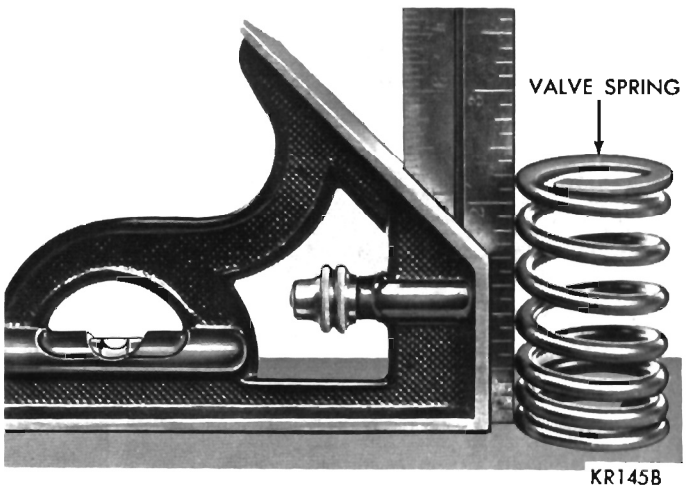

Fig. 18—Checking Valve Spring Squareness

(2) If valves or seats are reground, check valve stem height with Tool C-3968 (Fig. 19). If valve is too long, grind off the tip until length is within limits.

(3) Install new cup seals on all valve stems and over valve guides (Fig. 20). Install valve springs and retainers.

(4) Compress valve springs with Tool C-3422A, install locks and release tool. **If valves and/or seats are reground, measure the installed height of springs, make sure measurement is taken from bottom of spring seat in cylinder head to the bottom surface of spring retainer (if spacers are installed, measure from the top of spacer). If height is greater than 1-11/16 inches, install a 1/16 inch spacer in head counterbore to bring spring height back to normal 1-5/8 inches to 1-11/16 inches.**

HYDRAULIC TAPPETS

Preliminary to Checking the Hydraulic Tappets

Before disassembling any part of the engine to correct tappet noise, read the oil pressure at the gauge (Install a reliable gauge at pressure sending unit if vehicle has no oil pressure gauge.) and check the oil level in the oil pan. The pressure should be between 45 and 65 pounds at 1000 R.P.M.

The oil level in the pan should never be above the "full" mark on dipstick, or below the "add oil" mark. Either of these two conditions could be responsible for noisy tappets.

Oil Level Too High

If oil level is above the "full" mark on dipstick, it is possible for the connecting rods to dip into the oil while engine is running and create foam. Foam in oil pan would be fed to the hydraulic tappets by the oil pump causing them to lose length and allow valves to seat noisily.

Oil Level Too Low

Low oil level may allow oil pump to take in air which, when fed to the tappets, causes them to lose length and allows valves to seat noisily. Any leaks on intake side of pump through which air can be drawn will create the same tappet action. When tappet noise is due to aeration, it may be intermittent or constant, and usually more than one tappet will be noisy. When oil level and leaks have been corrected, engine should be operated at fast idle for sufficient time to allow all of the air inside of the tappets to be bled out.

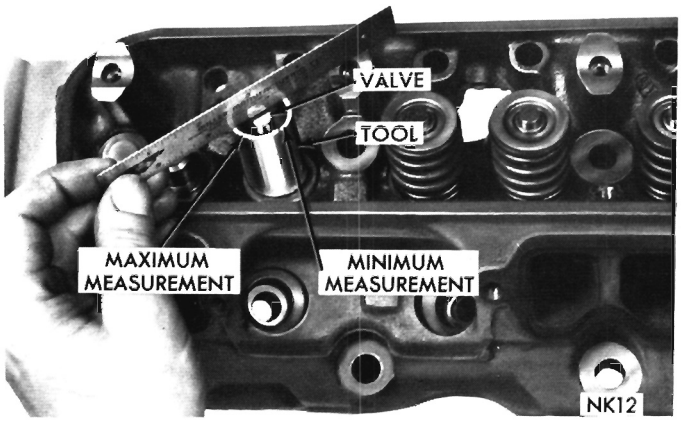

Fig. 19—Measuring Valve Stem Length

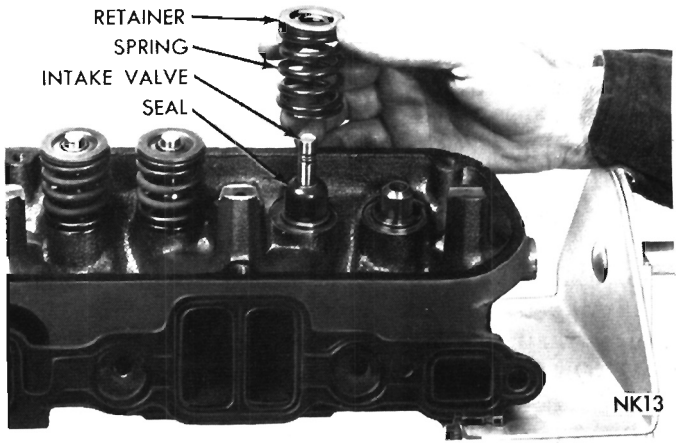

Fig. 20—Installing Valve, Cup Seal, Spring and Retainer

Tappet Noise Diagnosis

(1) To determine source of tappet noise, operate engine at idle with cylinder head covers removed.

(2) Feel each valve spring or rocker arm to detect noisy tappet. The noisy tappet will cause the affected spring and/or rocker arm to vibrate or feel rough in operation.

Worn valve guides or cocked springs are sometimes mistaken for noisy tappets. If such is the case, noise may be dampened by applying side thrust on the valve spring. If noise is not appreciably reduced, it can be assumed the noise is in the tappet. Inspect the rocker arm push rod sockets and push rod ends for wear.

(3) Valve tappet noise ranges from light noise to a heavy click. A light noise is usually caused by excessive leakdown around the unit plunger which will necessitate replacing the tappet, or by the plunger partially sticking in the tappet body cylinder. A heavy click is caused either by a tappet check valve not seating, or by foreign particles becoming wedged between the plunger and the tappet body, causing the plunger to stick in the down position. This heavy click will be accompanied by excessive clearance between the valve stem and rocker arm as valve closes. In either case, tappet assembly should be removed for inspection and cleaning.

Tappet Removal

(1) The tappets can be removed without removing

cylinder heads by following this recommended procedure: Remove cylinder head covers.

(2) Remove rocker arms and shaft assembly.

(3) Remove push rods and **identify to insure installation in original location.**

(4) Slide magnetic pickup tool through opening in cylinder head and seat tool firmly in the head of tappet.

(5) Pull tappet out of bore with a twisting motion. If all tappets are to be removed, **identify tappets to insure installation in original location.**

CAUTION: The plunger and tappet bodies are not interchangeable. The plunger and valve must always be fitted to the original body. It is advisable to work on one tappet at a time to avoid mixing of parts. Mixed parts are not compatible. Do not disassemble a tappet on a dirty work bench.

Disassembly (Fig. 21)

(1) Pry out plunger retainer spring clip.

(2) Clean varnish deposits from inside of tappet body above plunger cap.

(3) Invert tappet body and remove plunger cap, plunger, flat check valve, check valve spring, check valve retainer and plunger spring.

Cleaning and Assembly

(1) Clean all tappet parts in a solvent that will remove all varnish and carbon.

(2) Replace tappets that are unfit for further service with new assemblies.

(3) If plunger shows signs of scoring or wear and valve is pitted, or if valve seat on end of plunger indicates any condition that would prevent valve from seating, install a new tappet assembly.

(4) Assemble tappets (Fig. 21).

Testing

(1) Fill a pan with clean kerosene.

(2) Remove cap from plunger and plunger from tappet body.

(3) Fill tappet body with kerosene and install plunger.

(4) Unseat check valve with a brass rod to permit complete installation of plunger. Replace cap.

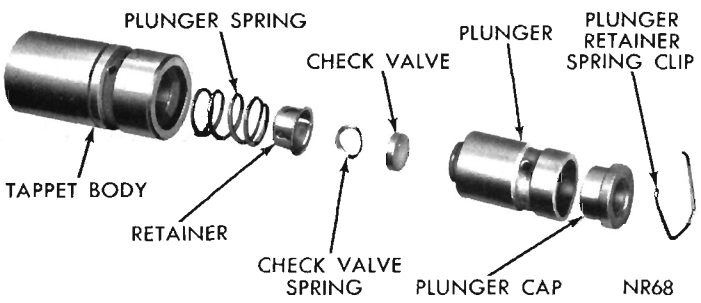

Fig. 21—Hydraulic Tappet Assembly (Disassembled View)

(5) Hold tappet in an upright position and insert lower jaw of pliers, Tool C-3160, in the groove of tappet body (Fig. 22).

(6) Engage jaw of pliers with top of tappet plunger. Test leakdown by compressing the pliers. If plunger collapses almost instantly as pressure is applied, disassemble tappet, clean and test again (Fig. 22).

(7) If tappet still does not operate satisfactorily after cleaning, install a new tappet assembly.

If the tappet or bore in cylinder block is scored, scuffed, or shows signs of sticking, ream the bore to next oversize.

Installation

(1) Lubricate tappets.

(2) Install tappets and push rods in their original positions.

(3) Install rocker arm and shaft assembly.

(4) Start and operate engine. Warm up to normal operating temperature.

CAUTION: To prevent damage to valve mechanism, engine must not be run above fast idle until all hydraulic tappets have filled with oil and have become quiet.

VALVE TIMING

(1) Turn crankshaft until the NO. 6 exhaust valve is closing and NO. 6 intake valve is opening.

(2) Insert a 1/4 inch spacer between rocker arm pad and stem tip of No. 1 intake valve. Allow spring load to bleed tappet down giving in effect a solid tappet.

(3) Install a dial indicator so plunger contacts valve spring retainer as nearly perpendicular as possible. Zero the indicator.

(4) Rotate crankshaft clockwise (normal running direction) until the valve has lifted .010 inch for 273 and 318 cubic inch engines or .030 inch for 340 cubic inch engine.

CAUTION: Do not turn crankshaft any further clock-

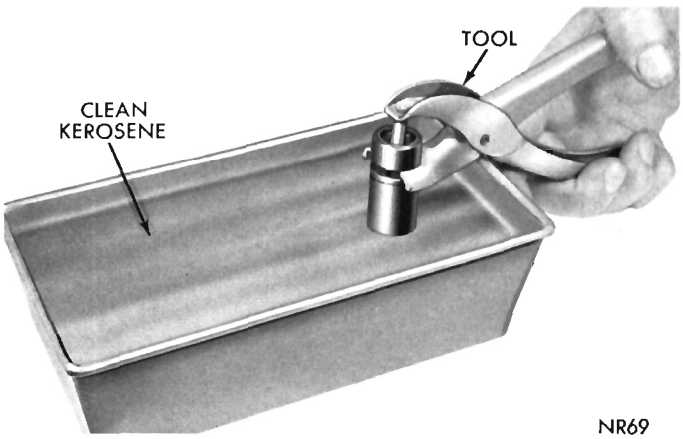

Fig. 22—Testing Tappet Using Tool C-3160

wise as valve spring might bottom and result in serious damage.

The timing of the crankshaft pulley should now read from 10 degrees before top dead center to 2 degrees after top dead center. Remove spacer.

(5) If reading is not within specified limits:

(a) Check sprocket index marks.

(b) Inspect timing chain for wear.

(c) Check accuracy of DC mark on timing indicator.

TIMING CHAIN COVER, OIL SEAL AND CHAIN

Cover Removal

(1) Drain cooling system and remove radiator, fan belt and water pump assembly.

(2) Remove pulley from vibration damper and bolt and washer securing vibration damper on crankshaft.

(3) Install Tool C-3688 and pull vibration damper from end of crankshaft (Fig. 23).

(4) Remove fuel lines and fuel pump.

(5) Loosen oil pan bolts and remove the front bolt at each side.

(6) Remove chain case cover and gasket using extreme caution to avoid damaging oil pan gasket.

It is normal to find particles of neoprene collected between the crankshaft seal retainer and crankshaft oil slinger.

(7) Slide crankshaft oil slinger from end of crankshaft.

Measuring Timing Chain for Stretch

(1) Place a scale next to timing chain so that any movement of chain may be measured.

(2) Place a torque wrench and socket over camshaft sprocket attaching bolt and apply torque in direction of crankshaft rotation to take up slack; 30 foot-pounds (with cylinder head installed) or 15 foot-pounds (cylinder heads removed). **With a torque applied to the camshaft sprocket bolt, crankshaft should not be permitted to move. It may be necessary to block crankshaft to prevent rotation.**

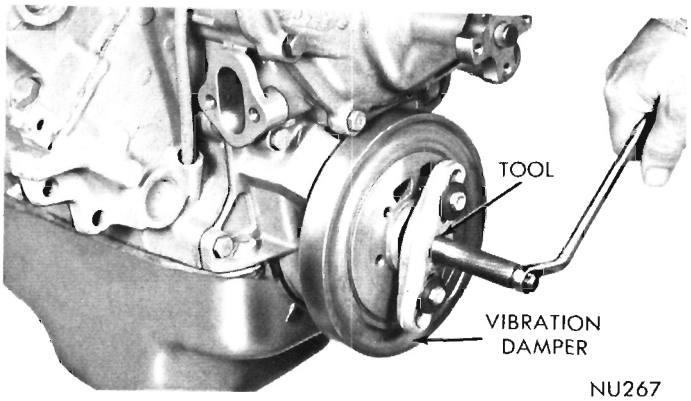

Fig. 23—Removing Vibration Damper Asembly

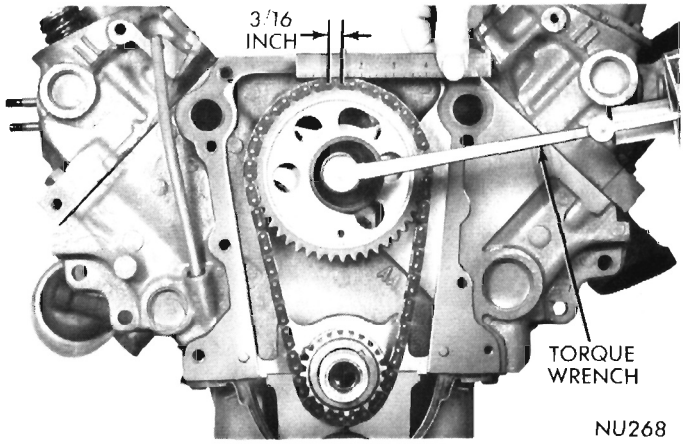

Fig. 24—Measuring Timing Chain Stretch

(3) Holding a scale with dimensional reading even with edge of a chain link, apply torque in the reverse direction 30 foot-pounds (with cylinder heads installed) or 15 foot-pounds (cylinder heads removed) and note amount of chain movement (Fig. 24).

(4) Install a new timing chain, if its movement exceeds 3/16 inch.

(5) If chain is satisfactory, slide the crankshaft oil slinger over shaft and up against sprocket (flange away from sprocket).

(6) If chain is not satisfactory, remove camshaft sprocket attaching cup washer, fuel pump eccentric and remove timing chain with crankshaft and camshaft sprockets.

When installing timing chain, use Tool C-3509 to prevent camshaft from contacting the welch plug in the rear of engine block. Remove distributor and oil pump-distributor drive gear. Locate tool against rear side of cam gear and attach tool with distributor retainer plate bolt (Fig. 25).

(7) Place both camshaft sprocket and crankshaft sprocket on the bench with timing marks on exact imaginary center line through both camshaft and crankshaft bores.

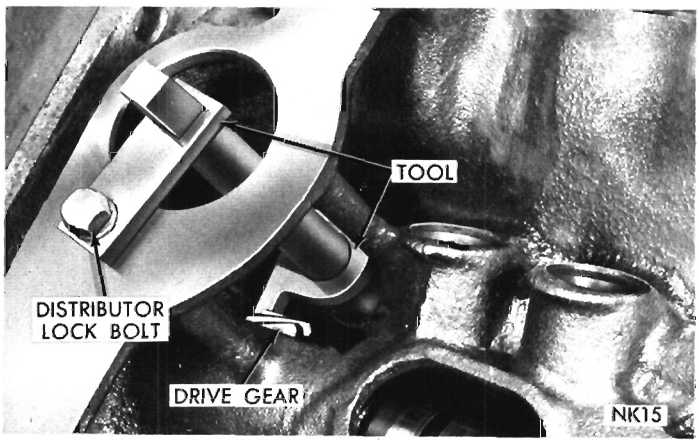

Fig. 25—Camshaft Holding Tool C-3509

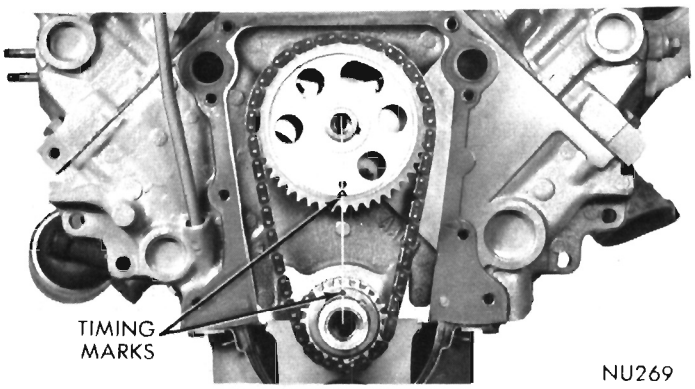

Fig. 26—Alignment of Timing Marks

(8) Place timing chain around both sprockets.

(9) Turn crankshaft and camshaft to line up with keyway location in crankshaft sprocket and in camshaft sprocket.

(10) Lift sprockets and chain (keep sprockets tight against the chain in position as described).

(11) Slide both sprockets evenly over their respective shafts and use a straight edge to check alignment of timing marks (Fig. 26).

(12) Install the fuel pump eccentric, cup washer, and camshaft bolt. Tighten bolt to 35 foot-pounds.

(13) Check camshaft for .002 to .006 inch end play with a new thrust plate and up to .010 inch end play with a used thrust plate. If not within these limits install a new thrust plate.

(14) If within limits, slide the crankshaft oil slinger over shaft and up against sprocket (flange away from sprocket).

Oil Seal Replacement (Cover Removed)

(1) Position remover screw of Tool C-3506 through case cover with inside of case cover up. Position puller blocks directly opposite each other, and force the angular lip between the neoprene and flange of the seal retainer.

(2) Place washer and nut on remover screw. Tighten nut, forcing the blocks into the gap to a point of distorting the seal retainer lip, (Fig. 27). This is important, **remover is only positioned at this point.**

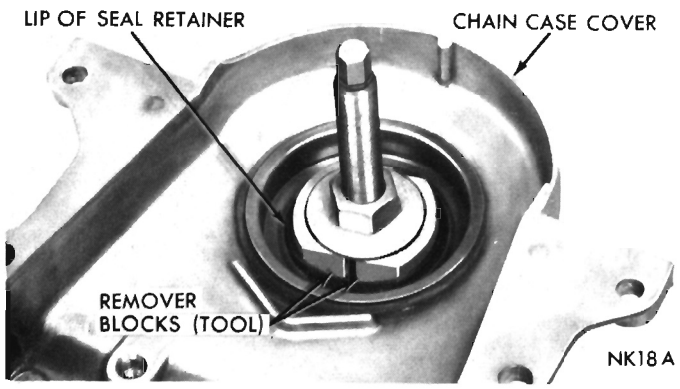

Fig. 27—Remover Blocks Expanded to Puller Position

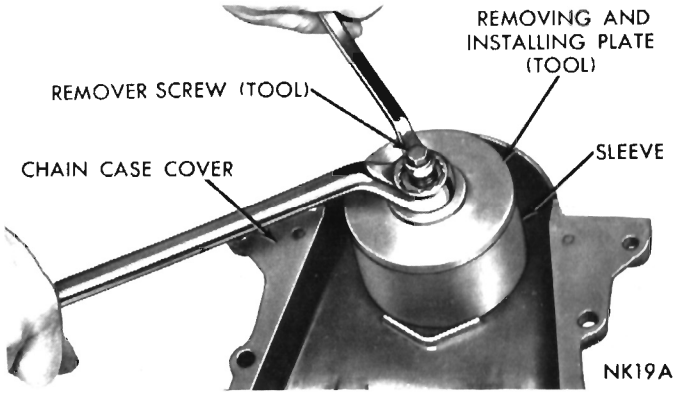

Fig. 28—Removing Oil Seal

(3) Place sleeve over the retainer and place removing and installing plate into sleeve.

(4) Place flat washer and nut on remover screw. Hold tool center screw and tighten tool lock nut to remove seal (Fig. 28).

(5) Insert remover screw through removing and installing plate so that the thin shoulder will be facing up.

(6) Insert remover screw with plate through the seal opening (inside of chain case cover facing up).

(7) Place seal in the cover opening, with neoprene down. Place the seal installing plate into the new seal, with protective recess toward lip of seal retainer (Fig. 29).

(8) Install flat washer and nut on remover screw, hold screw and tighten the nut (Fig. 30).

(9) Seal is properly installed when neoprene is tight against face of cover. Try to insert a .0015 feeler gauge between neoprene and cover (Fig. 31). If the seal is installed properly, the feeler gauge cannot be inserted. **Do not over compress neoprene.**

Cover Installation

(1) Be sure mating surfaces of chain case cover and cylinder block are clean and free from burrs.

(2) Using a new gasket carefully install chain case cover to avoid damaging oil pan gasket. Tighten

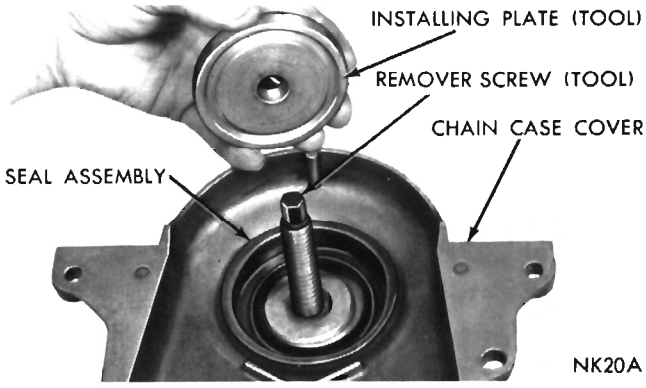

Fig. 29—Positioning Installer Plate

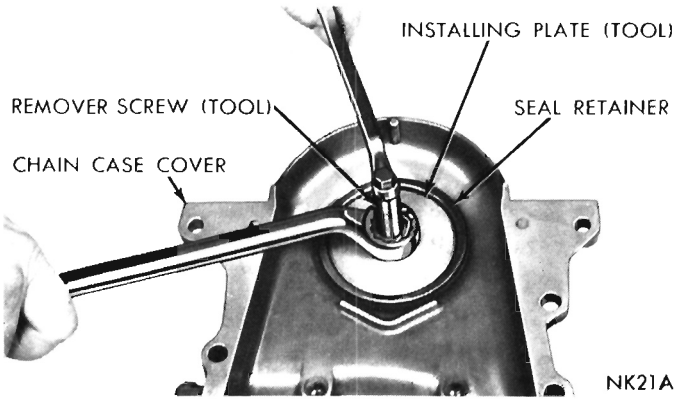

Fig. 30—Installing New Seal

chain case cover capscrews to 30 foot-pounds first then tighten oil pan capscrews to 15 foot-pounds.

(3) Lubricate seal with lubriplate, position damper hub slot on key in crankshaft, and slide hub on crankshaft.

(4) Place installing tool, part of Puller set Tool C-3688 in position and press damper hub on crankshaft (Fig. 32).

(5) Slide pulley over the shaft and attach with bolts and lockwashers. Tighten the bolts to 15 foot-pounds.

(6) Install damper hub retainer washer and bolt.

(7) Install fuel pump and fuel lines.

(8) Install water pump and housing assembly using new gaskets. Tighten bolts to 30 foot-pounds.

(9) Install radiator, fan and belt, hoses and close drains.

(10) Fill cooling system.

(11) With timing indicator on "O" install distributor drive gear with slot pointing to the first intake manifold bolt on left side of engine (Fig. 33).

CAMSHAFT

(Engine Removed from Vehicle)

The camshaft has an integral oil pump and distributor drive gear and a bolt on fuel pump eccentric, as shown in (Fig. 34). With engine in repair stand C-3167

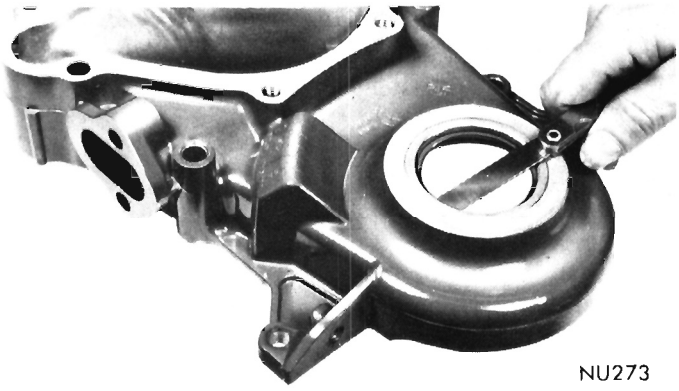

Fig. 31—Inspecting Seal for Proper Seating

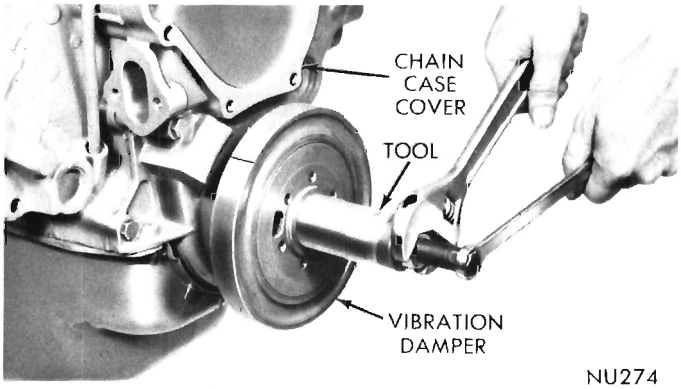

Fig. 32—Installing Vibration Damper Assembly

and adapter C-3662. Remove intake manifold, cylinder head covers, timing case cover and timing chain.

(1) Remove rocker arm and shaft assemblies.

(2) Remove push rods and tappets; identify so each part will be replaced in its original location.

(3) Remove distributor and lift out the oil pump and distributor drive shaft.

(4) Remove camshaft thrust plate and carefully withdraw the camshaft being careful not to damage cam bearings with the cam lobes.

Installation

(1) Lubricate camshaft lobes and camshaft bearing journals and insert the camshaft to within 2 inches of its final position in cylinder block.

(2) Install Tool C-3509 with tongue back of distributor drive gear, (Fig. 25).

(3) Hold tool in position with distributor lock plate screw. This tool will restrict camshaft from being pushed in too far and prevent knocking out the welch plug in rear of cylinder block. **Tool should remain installed until the camshaft and crankshaft sprockets and timing chain have been installed.**

Whenever an engine has been rebuilt and/or a new camshaft and/or tappets are installed, one quart of

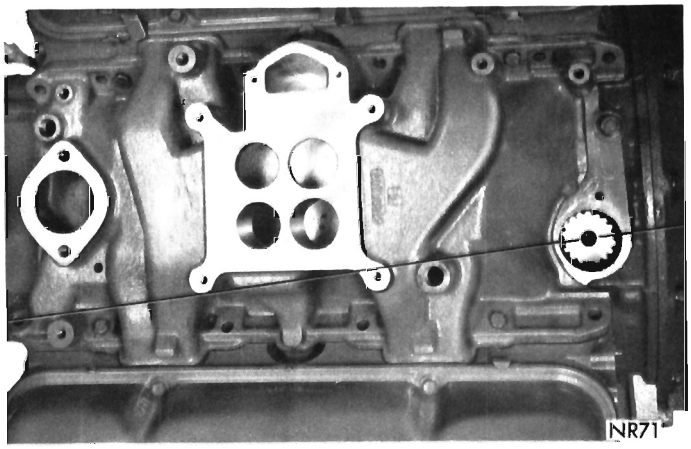

Fig. 33—Positioning of Distributor Drive Gear (340 Cubic Inch Shown)

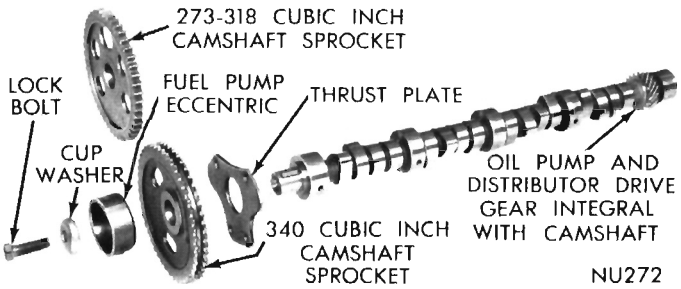

Fig. 34—Camshaft and Sprocket Assembly (Disassembled View)

engine supplement, Chrysler Part Number 1879406 or equivalent should be added to the engine oil to aid in break-in. The oil mixture should be left in the engine for a minimum of 500 miles. Drain the oil mixture at the next normal oil change.

Whenever the camshaft is replaced, all of the tappet faces must be inspected for crown with a straightedge. If any negative (crown dish) is observed, tappet must be replaced.

CAMSHAFT BEARINGS (Engine Removed from Vehicle)

Removal

(1) With engine completely disassembled, drive out rear cam bearing welch plug.

(2) Install proper size adapters and horse shoe washers (part of Tool C-3132A) at back of each bearing shell to be removed and drive out bearing shells, (Fig. 35).

Installation

(1) Install new camshaft bearings with Tool C-3132A by sliding the new camshaft bearing shell over proper adapter.

(2) Position rear bearing in the tool. Install horse shoe lock and by reversing removal procedure, carefully drive bearing shell into place.

(3) Install remaining bearings in the same manner. Bearings must be carefully aligned to bring oil holes into full register with oil passages from the main bearings. Also, Number two bearing must index with the oil passage to the left cylinder head and Number four bearing must index with the oil passage to the right cylinder head. If the camshaft bearing shell oil holes are not in exact alignment, remove and reinstall them correctly. Install a new core hole plug at the rear of camshaft. **Be sure this plug does not leak.**

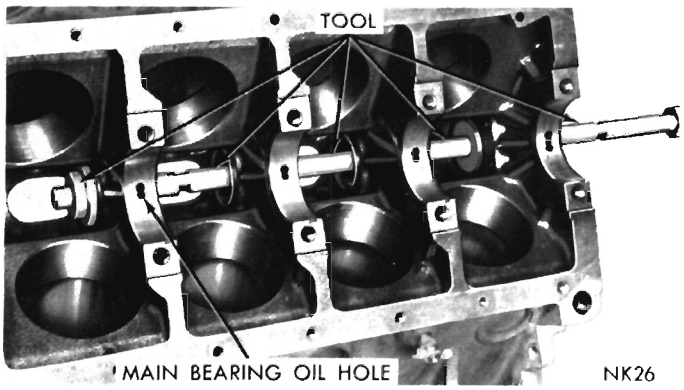

Fig. 35—Removing Camshaft Bearings

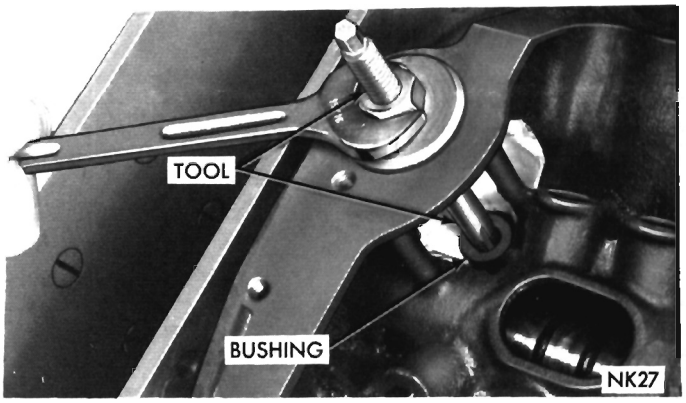

Fig. 36—Removing Distributor Drive Shaft Bushing

DISTRIBUTOR DRIVE SHAFT BUSHING

Removal

(1) Insert Tool C-3052 into old bushing and thread down until a tight fit is obtained, (Fig. 36).

(2) Hold puller screw and tighten puller nut until bushing is removed.

Installation

(1) Slide new bushing over burnishing end of Tool C-3053 and insert the tool and bushing into the bore.

(2) Drive bushing and tool into position, using a hammer (Fig. 37).

(3) As the burnisher is pulled through the bushing by tightening the puller nut, the bushing is expanded tight in block and burnished to correct size, (Fig. 38). **DO NOT REAM THIS BUSHING.**

Distributor Timing

Before installing the distributor and oil pump drive shaft, time engine as follows:

(1) Rotate crankshaft until No. 1 cylinder is at top dead center on the firing stroke.

(2) When in this position, the straight line on vibration damper should be under ("O") on the timing indicator.

(3) Coat shaft and drive gear with engine oil. Install the shaft so that after gear spirals into place, it will index with the oil pump shaft, so slot in top of drive gear will point to the first intake manifold bolt on left side of engine as shown in (Fig. 33).

Installation of Distributor

(1) Hold the distributor over the mounting pad on

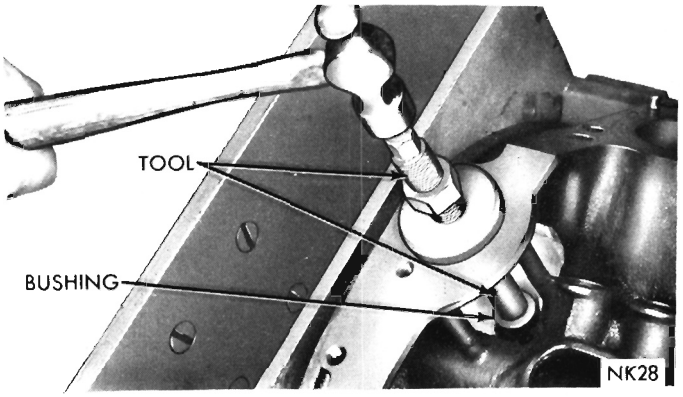

Fig. 37—Installing Distributor Drive Shaft Bushing

cylinder block with vacuum chamber pointing toward right of engine.

(2) Turn rotor until it points forward and to approximate location of No. 1 tower terminal in distributor cap.

(3) Place distributor gasket in position.

(4) Lower the distributor and engage the shaft in the slot of distributor drive shaft gear.

(5) Turn distributor clockwise until breaker contacts are just separating and install hold down clamp.

CYLINDER BLOCK

Piston Removal

(1) Remove top ridge of cylinder bores with a reliable ridge reamer before removing pistons from cylinder block. **Be sure to keep tops of pistons covered during this operation. Pistons and connecting rods must be removed from top of cylinder block. When removing piston and connecting rod assemblies from the engine, rotate crankshaft so that each connecting rod is centered in cylinder bore.**

(2) Inspect connecting rods and connecting rod caps for cylinder identification. Identify them if necessary.

(3 Remove connecting rod cap. Install connecting rod bolt guide set on connecting rod bolts. Push each piston and rod assembly out of cylinder bore. **Be careful not to nick crankshaft journals.**

(4) After removal, install bearing cap on the mating rod.

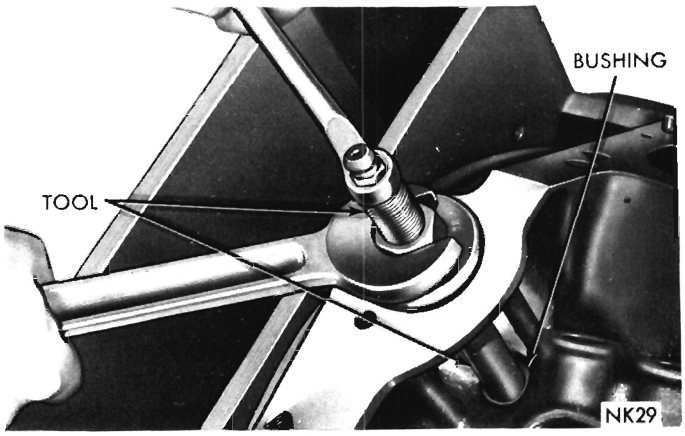

Fig. 38—Burnishing Distributor Drive Shaft Bushing

Cleaning and Inspection

(1) Clean cylinder block thoroughly and check all core hole plugs for evidence of leaking.

(2) If new core plugs are installed, coat edges of plug and core hole with Number 1057794 Sealer or equivalent. Drive the core plug in so that the rim lies at least 1/64″ below the lead-in chamfer.

(3) Examine block for cracks or fractures.

Cylinder Bore Inspection

The cylinder walls should be checked for out-of-round and taper with Tool C-119. If the cylinder bores show more than .005″ out-of-round, or a taper of more than .010″, or if the cylinder walls are badly scuffed or scored, the cylinder block should be rebored and honed, and new pistons and rings fitted. Whatever type of boring equipment is used, boring and honing operation should be closely coordinated with the fitting of pistons and rings in order that specified clearances may be maintained.

Honing Cylinder Bores

Before honing, stuff plenty of clean rags under the bores, over the crankshaft to keep abrasive materials from entering crankcase area.

(1) Used carefully, the cylinder bore resizing hone C-823 equipped with 220 grit stones, is the best tool for this job. In addition to deglazing, it will reduce taper and out-of-round as well as removing light scuffing, scoring or scratches. Usually a few strokes will clean up a bore and maintain the required limits.

(2) Deglazing of the cylinder walls may be done using a cylinder surfacing hone, Tool C-3501, equipped with 280 grit stones (C-3501-3810) if the cylinder bore is straight and round. 20-60 strokes depending on the bore condition will be sufficient to provide a satisfactory surface. Inspect cylinder walls after each 20 strokes. Use honing oil C-3501-3880 or a light honing oil available from major oil distributors. **Do not use engine or transmission oil, mineral spirits or kerosene.**

(3) Honing should be done by moving the hone up and down fast enough to get a cross-hatch pattern. When hone marks **intersect** at 60°, the cross hatch angle is most satisfactory for proper seating of rings (Fig. 39).

(4) After honing, it is necessary that the block be cleaned again to remove all traces of abrasives.

CAUTION: Be sure all abrasives are removed from engine parts after honing. It is recommended that a solution of soap and water be used with a brush and

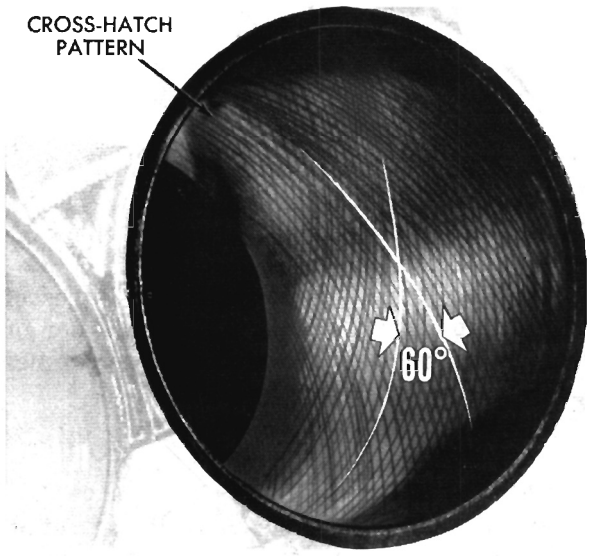

Fig. 39—Cross Hatch Pattern

the parts then thoroughly dried. The bore can be considered clean when it can be wiped clean with a white cloth and cloth remains clean. Oil the bores after cleaning to prevent rusting.

PISTONS, PINS AND RINGS

The pistons are cam ground so that the diameter at the pin boss is less than its diameter across the thrust face. This allows for expansion under normal operating conditions. Under operating temperatures, expansion forces the pin bosses away from each other, thus, causing the piston to assume a more nearly round shape. It is important that pistons be checked for taper and elliptical shape before they are fitted into the cylinder bore (Fig. 40 and 41).

Finished Pistons

All pistons are machined to the same weight in grams, regardless of oversize to maintain piston balance. For cylinder bores which have been honed or rebored, pistons are available in standard and the following oversizes: .005, .020, .040 inch.

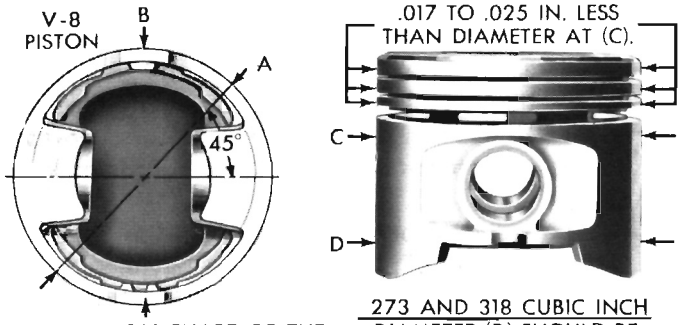

Fig. 40—273-318 Cubic Inch Piston Measurements

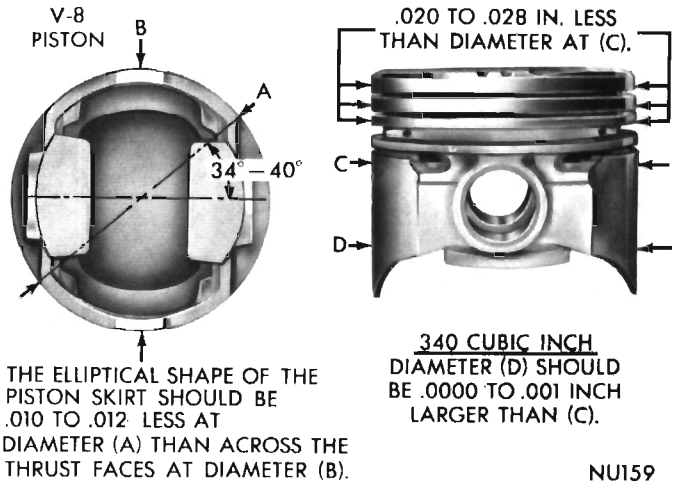

Fig. 41—340 Cubic Inch Piston Measurements

Fitting Pistons

Piston and cylinder wall must be clean and dry. Specified clearance between the piston and the cylinder wall is .0005 to .0015 inch.

Piston diameter should be measured at the top of skirt 90 degrees to piston pin axis. Cylinder bores should be measured halfway down the cylinder bore and transverse to the engine crankshaft center line.

Pistons and cylinder bores should be measured at normal room temperature, 70 degrees F.

Piston Pins

(1) With new piston and new pins at room temperature, 70°F., pin should be a light thumb push fit in the piston and connecting rod. Replacement is necessary if there is excessive clearance between the pin and the piston. Ream piston and connecting rod to next oversize. New pistons are supplied with properly fitted pins.

Install piston pin lock rings with the beveled edge away from the piston pin, using Tool C-3915 (340 cubic inch engine).

(2) Assemble piston and rods for the left hand cylinder bank (1-3-5-7) with piston boss marked "Front" and indent on piston head on the same side as the larger chamfer on large end of connecting rod. Assemble pistons and rods to be used in the right cylinder bank (2-4-6-8) with "Front" and indent opposite the large chamfer in the connecting rod.

Fitting Rings

(1) Measure piston ring gap about two inches from bottom of cylinder bore in which it is to be fitted (An inverted piston can be used to push the rings down to insure positioning rings squarely in the cylinder bore before measuring).

(2) Insert feeler stock in the gap. The ring gap should be between .010 and .020 inch for compression rings and .015 to .062 inch for oil ring steel rails in

standard size bores (for new service rings). Maximum gap in .005 inch O/S bores should be .060 inch for compression rings and .070 inch for oil ring steel rails.

(3) Measure side clearance between piston ring and ring land (Fig. 42). Clearance should be .0015 to .003 inch for the top compression ring and the intermediate ring. Steel rail service oil ring should be free in groove, but should not exceed .005 inch side clearance.

(4) On 273 and 318 Cubic Inch Engine, the keys on the spacer expander must be inserted into the hole in the oil ring groove over the piston pin front boss.

On 340 Cubic Inch Engine, install the spacer keys into one of the drain holes on the outboard side of the engine.

(5) Install compression rings in middle and top grooves use ring installer Tool C-263 for 273 cubic inch engine, Tool C-3586 for 318 cubic inch engine, Tool C-3672 for 340 cubic inch engine. Be sure the mark "Top" on each compression ring is to the top of piston when ring is installed.

CRANKSHAFT IDENTIFICATION

A crankshaft which has one or more connecting rod or main bearing journals will be steel stamped on the milled flat on the #8 crankshaft counterweight (Fig. 43).

Undersize Journal	Identification Stamp
.001 inch	R1-R2-R3 or R4
.010 inch	RX
.001 inch	M1-M2-M3-M4 or M5
.010 inch	MX

A crankshaft which has .010 inch undersize journals will have all rod journals; all main journals or both.

CONNECTING RODS

Installation of Connecting Rod Bearings

Fit all rods on one bank until completed. Do not alternate from one bank to another, because when the rods are assembled to pistons correctly, they are not interchangeable from one bank to another.

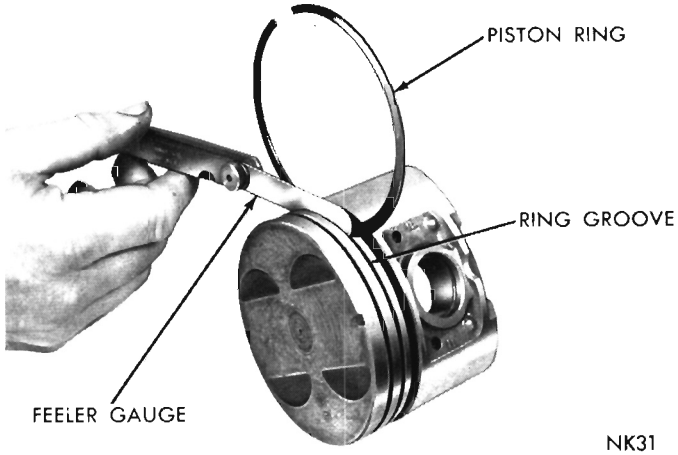

Fig. 42—Measuring Piston Ring Clearance

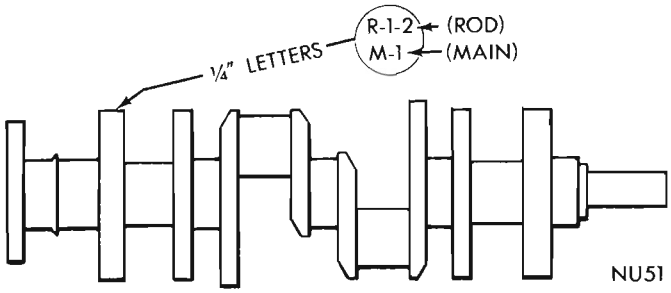

Fig. 43—Showing Location of Internal Marking of No. 8 Counterweight

The bearing caps are not interchangeable and should be marked at removal to insure correct assembly.

Each bearing cap has a small "V" groove across the parting face. When installing the lower bearing shell, make certain that the "V" groove in the shell is in line with the "V" groove in the cap. This provides lubrication of the cylinder wall in the opposite bank.

The bearing shells must be installed so that the tangs are in the machined grooves in the rods and caps.

Limits of taper or out-of-round on any crankshaft journals should be held to .001 inch. Bearings are available in .001, .002, .003, .010 and .012 inch undersize. **Install the bearings in pairs. Do not use a new bearing half with an old bearing half. Do not file the rods or bearing caps.**

MEASURING CONNECTING ROD BEARING CLEARANCE

Shim Stock Method

(1) (a) **On 273 and 318 Cubic Inch Engine,** place and oiled .001 inch brass shim stock (1/2 inch wide and 3/4 inch long between the bearing and connecting rod journal.

(b) **On 340 Cubic Inch Engine** with tri-metal bearings, use an oiled .002 inch brass shim stock (1/2 inch wide and 3/4 inch long) between the bearing and connecting rod journal.

(2) Install bearing cap and tighten to 45 foot-pounds.

(3) Turn crankshaft 1/4 turn in each direction. A slight drag should be felt which indicates clearance is satisfactory. **273 and 318 Cubic Inch Engine** correct clearance is from .0005 to .0015 inch; **340 Cubic Inch Engine** with tri-metal bearings correct clearance is from .001 to .002 inch.

(4) Side play should be from .009 to .017 inch (two rods).

INSTALLING PISTON AND CONNECTING ROD ASSEMBLY

(1) Before installing pistons, and connecting rod as-

semblies into the bore, be sure that compression ring gaps are staggered so that neither is in line with oil ring rail gap.

(2) Before installing the ring compressor, make sure the oil ring expander ends are butted and the rail gaps located as shown in figure 44.

(3) Immerse the piston head and rings in clean engine oil, slide the ring compressor, Tool C-385, over the piston and tighten with the special wrench (part of Tool C-385). **Be sure position of rings does not change during this operation.**

(4) Install connecting rod bolt protectors on rod bolts, the long protector should be installed on the numbered side of the connecting rod.

(5) Rotate crankshaft so that the connecting rod journal is on the center of the cylinder bore. Insert rod and piston into cylinder bore and guide rod over the crankshaft journal (Fig. 45).

(6) Tap the piston down in cylinder bore, using a hammer handle. At the same time, guide connecting rod into position on crankshaft journal.

(7) The notch or groove on top of piston must be pointing toward front of engine and the larger chamfer of the connecting rod bore must be installed toward crankshaft journal fillet.

(8) Install rod caps, tighten nuts to 45 foot-pounds.

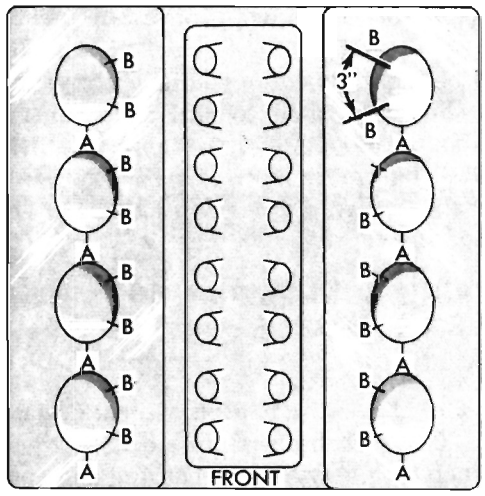

TOP VIEW OF BLOCK

A-EXPANDER GAPS B-RAIL GAPS

IF YOU HAVE FOLLOWED THE INSTRUCTIONS, THE RING WILL BE IN THIS POSITION ON THE PISTON.

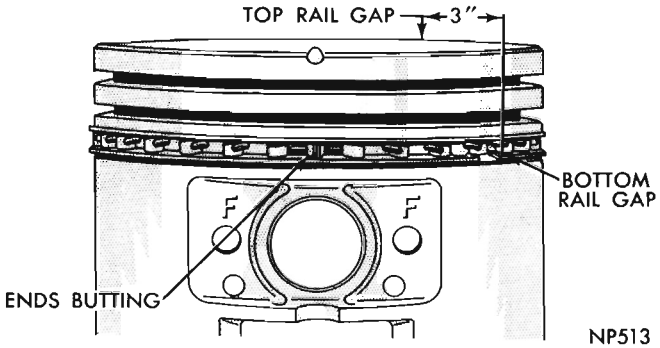

Fig. 44—Proper Oil Ring Installation

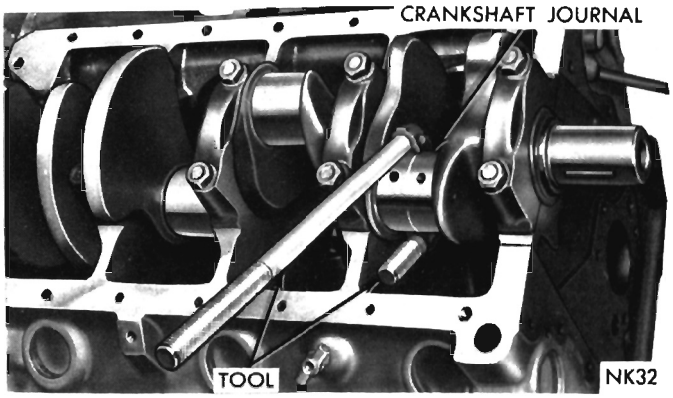

Fig. 45—Removing or Installing Connecting Rod

CRANKSHAFT MAIN JOURNALS

The crankshaft journals should be checked for excessive wear, taper and scoring. Limits of taper or out-of-round on any crankshaft journals should be held to .001 inch. Journal grinding should not exceed .012 inch under the standard journal diameter. Do NOT grind thrust faces of Number 3 main bearing. Do NOT nick crank pin or main bearing fillets. After regrinding, remove rough edges from crankshaft oil holes and clean out all oil passages.

CRANKSHAFT MAIN BEARINGS

Bearing caps are not interchangeable and should be marked at removal to insure correct assembly. Upper and lower bearing halves are NOT interchangeable. Lower main bearing halves of 1, 2 and 4 are interchangeable. Upper main bearing halves of 1, 2 and 4 are interchangeable.

Upper and lower Number 3 bearing halves are flanged to carry the crankshaft thrust loads and are NOT interchangeable with any other bearing halves in the engine (Fig. 46). Bearing shells are available in standard and the following undersizes: .001, .002, .003, .010 and .012 inch. Never install an undersize bearing shell that will reduce clearance below specifications.

Removal

(1) Remove oil pan and identify bearing caps before removal.

(2) Remove bearing caps one at a time. Remove upper half of bearing by inserting Tool C-3059 (Fig. 47) into the oil hole of crankshaft.

(3) Slowly rotate crankshaft clockwise, forcing out upper half of bearing shell.

Installation

Only one main bearing should be selectively fitted

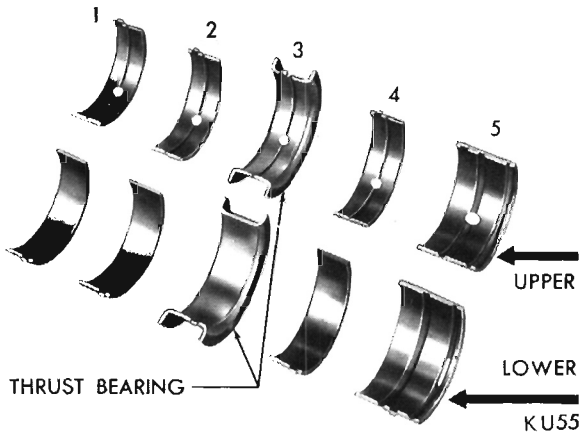

Fig. 46—Main Bearing Identification

while all other main bearing caps are properly tightened.

When installing a new upper bearing shell, slightly chamfer the sharp edges from the plain side.

(1) Start bearing in place, and insert Tool C-3059 into oil hole of crankshaft (Fig. 47).

(2) Slowly rotate crankshaft counter-clockwise sliding the bearing into position. Remove Tool C-3059.

MEASURING MAIN BEARING CLEARANCE

Shim Stock Method

(1) Smooth edges of a 1/2 x 3/4 inch piece of brass shim stock, .001 inch thickness.

(2) Install bearing in center main bearing cap, **bearing tang in groove in cap,** lubricate bearing and position shim stock across the bearing, install cap, tighten bolts to 85 foot-pounds.

(3) If a slight drag is felt as crankshaft is turned (moved no more than 1/4 turn in either direction), clearance is .001 inch or less and is considered satisfactory.

If, however, no drag is felt, the bearing is too large

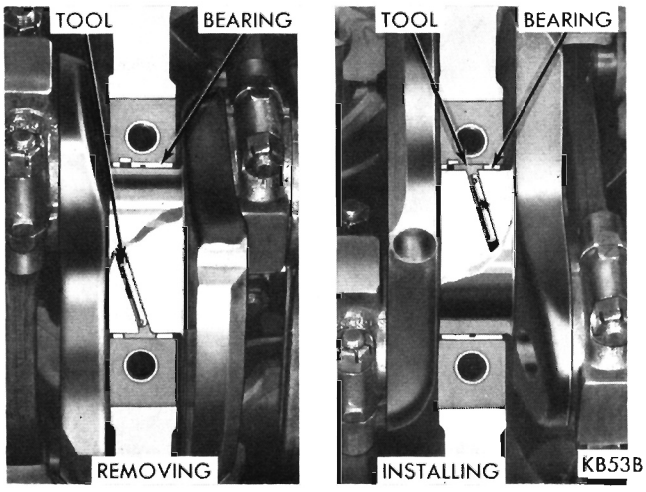

Fig. 47—Removing or Installing Upper Main Bearing

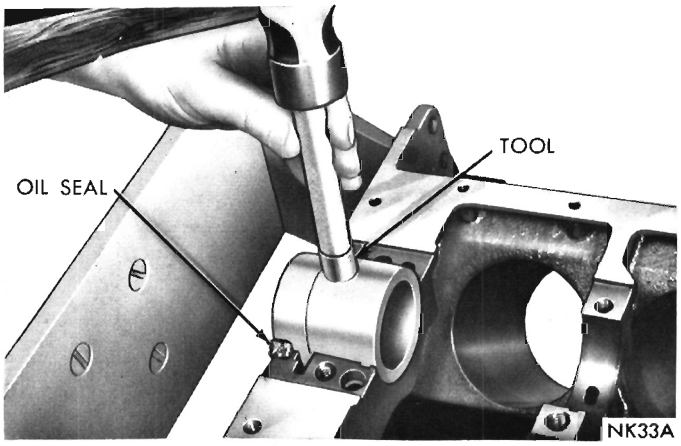

Fig. 48—Installing Rear Main Upper Oil Seal

or crankshaft cannot be rotated, bearing is too small and should be replaced with the correct size.

(4) Measure crankshaft end play .002 to .007 inch. If end play is less than .002 inch or more than .007 inch, install a new number 3 main bearing.

(5) Fit remaining bearings in same manner.

It is permissable to use one .001 inch undersize bearing shell with one standard bearing shell or one .002 inch undersize bearing shell with one .001 inch undersize shell. **Always use the smaller diameter bearing half as the upper. Never use an upper bearing half more than .001 inch smaller than the lower bearing half and never use a new bearing half with a used bearing half.**

REAR MAIN BEARING OIL SEAL (Crankshaft Removed)

Upper Seal

(1) Install a new rear bearing oil seal in the cylinder block so that both ends protrude.

(2) Using Tool C-3511 tap seal down into position until tool is seated in bearing bore, (Fig. 48).

(3) Hold tool in this position and cut off the portion

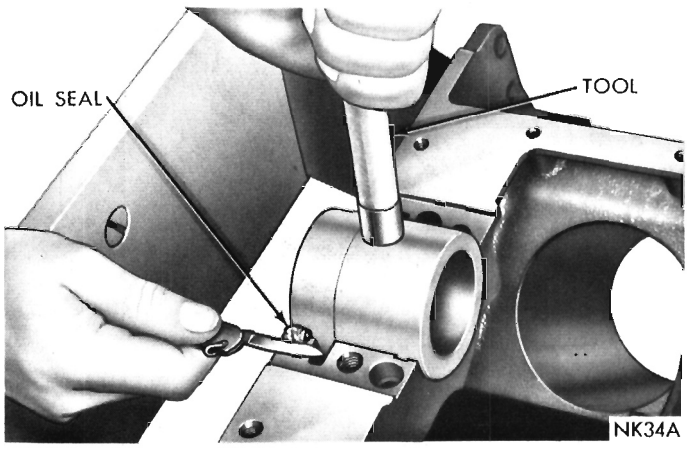

Fig. 49—Trimming Rear Main Upper Oil Seal

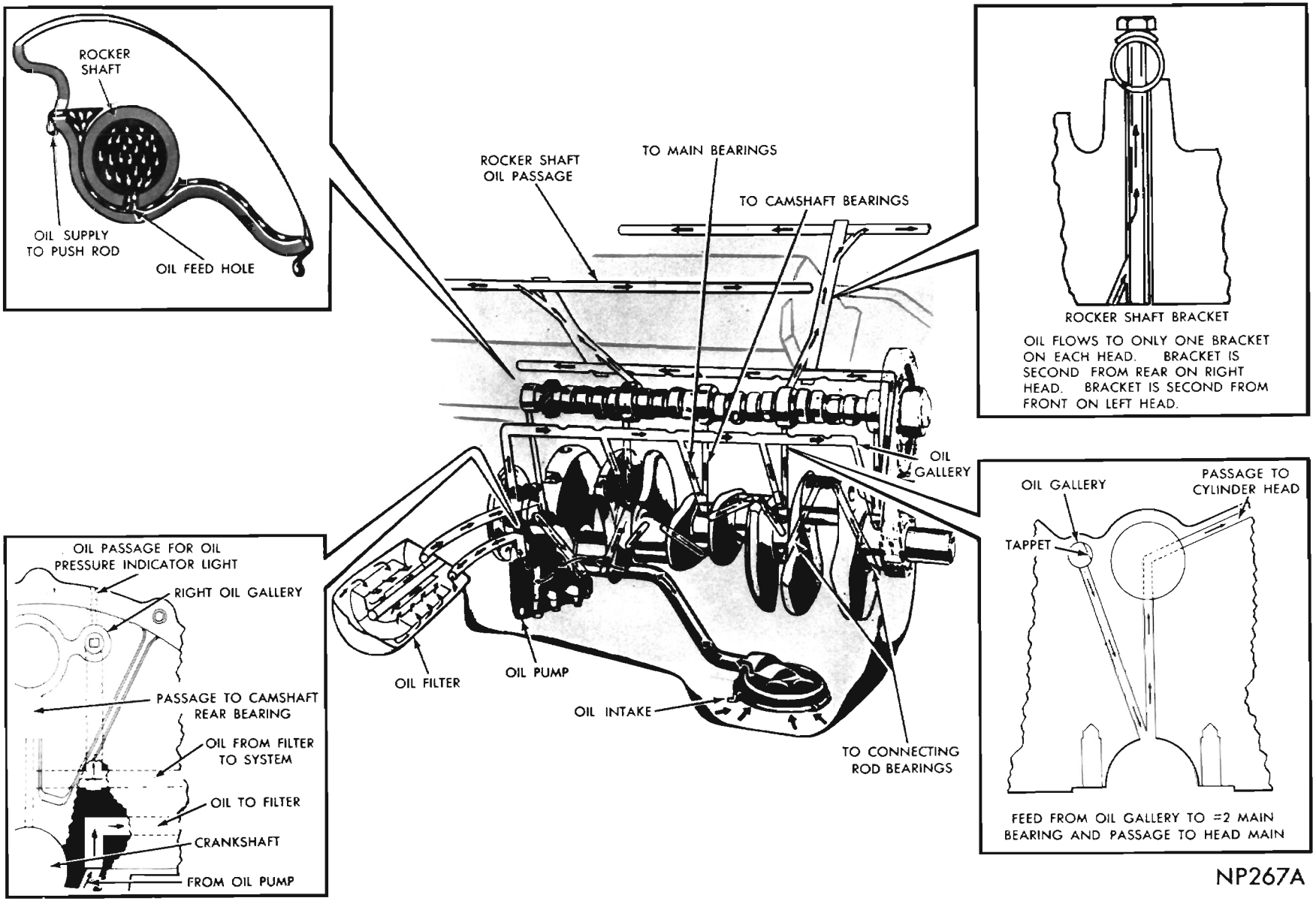

Fig. 50—Engine Oiling System

of seal that extends above the block on both sides, (Fig. 49).

Lower Seal

(1) Install a new seal in bearing cap so that ends protrude.

(2) Using Tool C-3511 tap the seal down into position until tool is seated in bearing bore.

(3) Hold tool in this position and cut off the portion of seal that extends above the cap on both sides.

ENGINE OILING SYSTEM

(Fig. 50)

OIL PAN

Removal

(1) Disconnect negative (ground) cable from the battery, and remove dipstick.

(2) Raise vehicle on a hoist, drain the oil. Remove engine to torque converter left housing strut.

(3) Remove steering and idle arm ball joints from steering linkage center link.

(4) Remove exhaust pipes from exhaust manifolds and leave hang without disconnecting from the muffler on single exhaust system.

(5) Remove the oil pan bolts and oil pan.

Installation

(1) Inspect alignment of oil strainer. Bottom of strainer must be parallel with the machined surface of the cylinder block. Bottom of strainer must touch bottom of oil pan.

(2) Install oil pan using a new gasket and seals. Install engine to converter housing strut.

(3) Connect exhaust pipes to manifolds. (If removed).

(4) Connect steering and idler arm ball joints to steering center link.

(5) Lower vehicle, install dipstick, fill with proper grade and quantity of motor oil, connect battery ground.

OIL PUMP

It is necessary to remove the oil pan, and remove the oil pump from rear main bearing cap to service the oil pump.

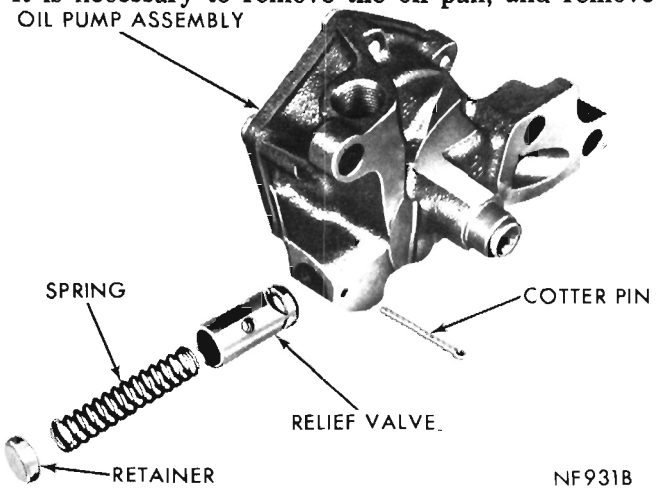

Fig. 51—Relief Valve, Spring and Retainer Removed

Disassembly

(1) To remove the relief valve, proceed as follows:

(a) Remove cotter pin, drill a 1/8 inch hole into the relief valve cap and insert a self-threading sheet metal screw into cap.

(b) Clamp screw into a vise and while supporting oil pump, remove cap by tapping pump body using a soft hammer. Discard cap and remove spring and relief valve (Fig. 51).

(2) Remove oil pump cover bolts and lockwashers, and lift off cover.

(3) Discard oil seal ring.

(4) Remove pump rotor and shaft, and lift out outer rotor.

(5) Wash all parts in a suitable solvent and inspect carefully for damage or wear (Fig. 52).

Inspection

(1) The mating face of the oil pump cover should be smooth. If cover is excessively scratched or grooved, it should be replaced.

(2) Check for excessive cover to rotor wear by laying a straightedge across cover surface. If a .0015 inch feeler gauge can be inserted between the cover and straightedge, discard cover and install a new one (Fig. 53).

(3) Measure diameter and thickness of outer rotor. If outer rotor measures less than .825 inch (Fig. 54) and the diameter is less than 2.469 inches, install a new outer rotor.

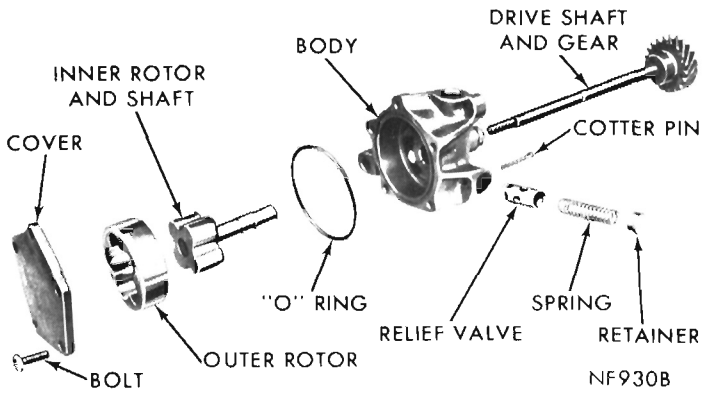

Fig. 52—Oil Pump Assembly (Disassembled View)

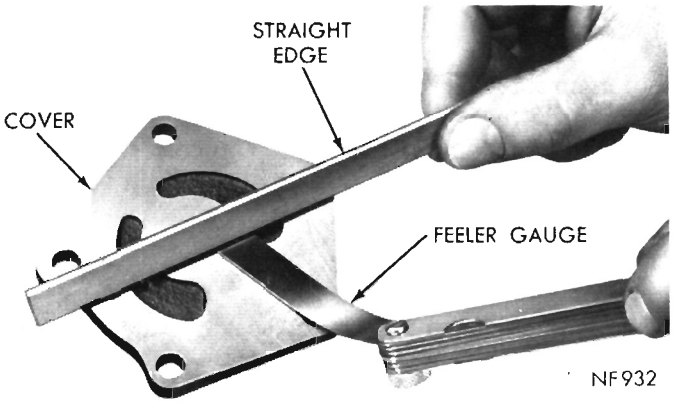

Fig. 53—Measuring Oil Pump Cover Flatness

(4) Measure thickness of inner rotor.

(5) If inner rotor measures less than .825 inch, a new inner rotor should be installed (Fig. 55).

(6) Slide outer rotor into pump body, press to one side with fingers and measure clearance between outer rotor and pump body (Fig. 56). If measurement is more than .012 inch, replace oil pump body.

(7) Install inner rotor and shaft into pump body. If clearance between inner and outer rotors (Fig. 57) is more than .010 inch, replace inner and outer rotors.

(8) Place a straightedge across the face (between the bolt holes). If a feeler gauge of more than .004 inch can be inserted between rotors and straightedge, replace pump body (Fig. 58).

(9) Inspect oil pump relief valve plunger for scoring and for free operation in its bore. Small scores may be removed with 400 grit wet or dry paper.

(10) The relief valve spring has a free length of 2-1/32 to 2-3/64 inch and should test 16.2 to 17.2 lbs. when compressed to 1-11/32 inch. Discard springs that fails to meet specifications.

(11) Install the relief valve, spring a new retainer cap. (Spring seats inside retainer cap). Press retainer in housing so that top of retainer cap is within the relief valve bore diameter as shown in figure 59. Install cotter pin.



Fig. 54—Measuring Outer Rotor Thickness

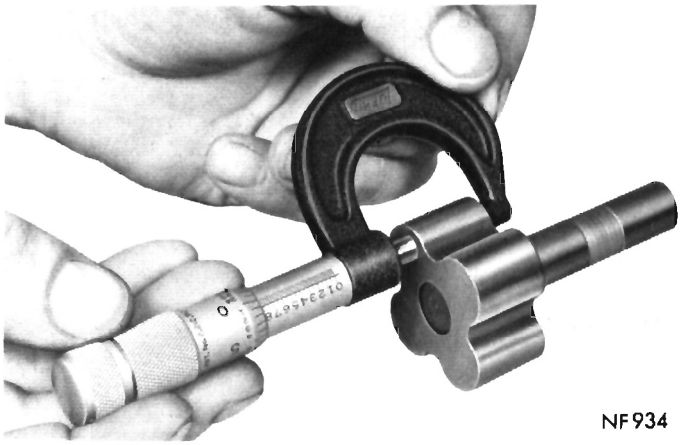

Fig. 55—Measuring Inner Rotor Thickness

(12) If oil pressure is low, inspect for worn bearings, or look for other causes of possible loss of oil pressure.

Assembly

(1) When assembling oil pump, be sure to use a new oil seal ring between cover and body.

(2) Tighten cover bolts to 95 inch-pounds.

(3) Prime oil pump.

(4) Install oil pump and strainer to rear main bearing cap. Tighten bolts to 35 foot-pounds.

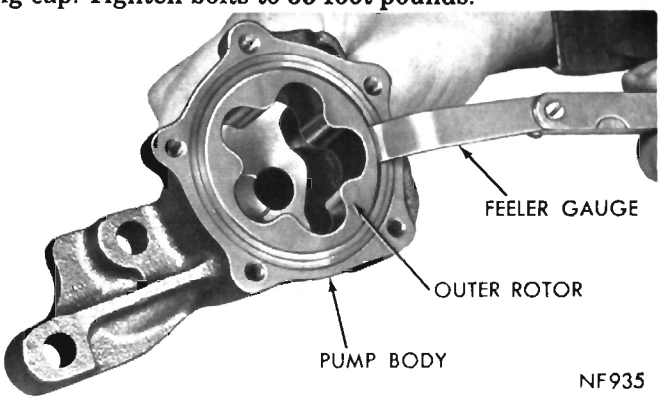

Fig. 56—Measuring Outer Rotor Clearance

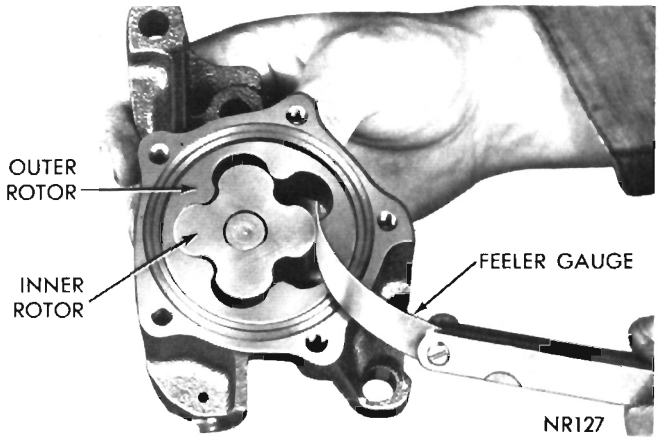

Fig. 57—Measuring Clearance Between Rotors

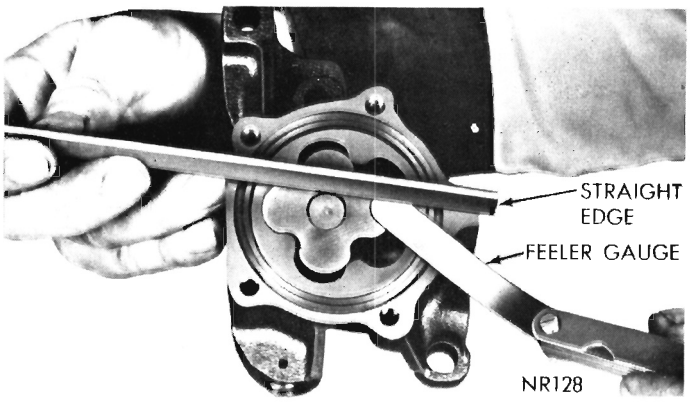

Fig. 58—Measuring Clearance Over Rotors

Servicing the Oil Pressure Relief Valve

It is necessary to remove the oil pan, and remove oil pump from rear main bearing cap to service the pressure relief valve.

To remove the relief valve, proceed as follows:

(1) Remove cotter pin, drill a 1/8 inch hole in the relief valve cap and insert a self-threading sheet metal screw into cap.

(2) Clamp screw into a vise and while supporting oil pump, remove cap by tapping pump body using a soft hammer. Discard cap.

(3) Remove spring and plunger.

(4) Clean parts thoroughly. Inspect oil pump relief valve for scoring and free operation in its bore. Small scores may be removed with 400 grit wet or dry paper providing extreme care is used not to round off the sharp edge portion of the valve.

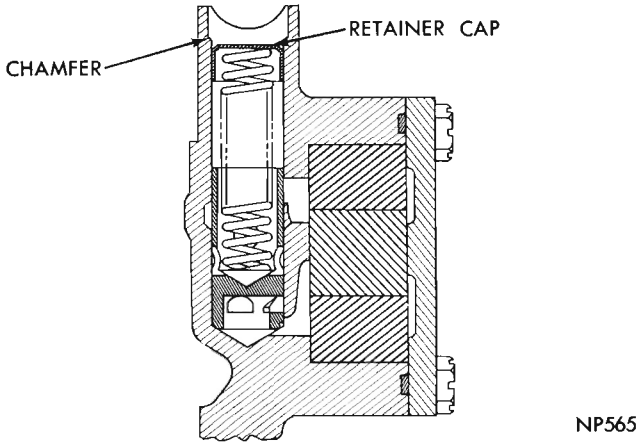

Fig. 59—Proper Retainer Cap Installation

(5) The relief valve spring has a free length of 2-1/32 to 2-3/64 inch and should test 16.2 to 17.2 lbs. when compressed to 1-11/32 inch. Discard spring that fails to meet specifications.

(6) Install the relief valve, spring a new retainer cap. (Spring seats inside retainer cap). Press retainer in housing so that top of retainer cap is within the relief valve bore diameter as shown in Figure 59. Install cotter pin.

383-440 CUBIC INCH ENGINES

INDEX

	Page		Page
Camshaft	56	Measuring Connecting Rod Bearing Clearance	62
Camshaft Bearings	57	Measuring Main Bearing Clearance	63
Connecting Rods	62	Oil Filter	67
Crankcase Ventilation System	84	Oil Pan	64
Crankshaft Identification	61	Oil Pump	65
Crankshaft Main Bearings	63	Pistons, Pins and Rings	59
Crankshaft Main Journals	62	Repair of Damaged or Worn Threads	85
Cylinder Block	58	Rear Main Bearing Oil Seal	64
Cylinder Heads	49	Rocker Arms and Shaft Assembly	48
Distributor Drive Shaft Bushing	57	Specifications	85
Engine Assembly	47	Timing Chain Cover, Oil Seal and Chain	54
Engine Mounts	46 & 47	Tune-Up	45
Engine Oiling System	64	Valves and Valve Springs	49
Hydraulic Tappets	52	Valve Timing	54
Installing Piston and Connecting Rod Assembly	62		

SERVICE PROCEDURES

TUNE-UP

(1) Test battery specific gravity, add water if necessary, clean and tighten battery connections.

(2) Test cranking voltage. See "Starting Motor Cranking Voltage" Electrical Section of this manual.

(3) Tighten the intake manifold bolts to 50 foot-pounds.

(4) Perform cylinder compression test. Compression should not vary more than 20 pounds for 383 cubic inch engines with 9.2 to 1 compression ratio, 25 pounds for 383 and 440 cubic inch engines with 10 to 1 and 10.1 to 1 compression ratios.

(5) Clean or replace spark plugs as necessary and

adjust gap to .035 inch. Tighten to 30 foot-pounds using new gaskets.

(6) Test resistance of spark plug cables. Refer to "Ignition System Secondary Circuit Inspection" Electrical Section.

(7) Inspect the breaker plate contacts, primary wire and vacuum advance operation. Test coil output voltage, primary and secondary resistance. Test Condenser. Replace parts as necessary. Refer to Ignition System and make necessary adjustments.

(8) Reset the ignition timing with the vacuum advance line disconnected. The ignition timing should be set to compensate for altitudes and/or gasoline grades.

(9) Set carburetor idle mixture adjustment. Adjust throttle stop screw to specifications. Perform a combustion analysis.

(10) Test the fuel pump for pressure and vacuum. Refer to "Fuel System" Group 14, Specifications.

(11) Inspect the manifold heat control valve in the right exhaust manifold for proper operation and apply Manifold Heat Control Valve Solvent Number 2525054 or equivalent to the bushing and shafts.

(12) Every 6 months, remove filter element and blow out dirt gently with air hose. Direct air from inside out, and keep nozzle 2 inches away from element to avoid damaging (Fig. 1). Clean the metal housing and replace the element. Every two years install a new factory recommended filter element or equivalent. Service the unit more frequently when driving under severe conditions, such as in dusty areas.

(13) Inspect crankcase ventilation system as outlined on page 84.

(14) Inspect and adjust the accessory belt drives referring to "Cooling System" Group 7 for proper adjustments.

(15) Road test vehicle as a final check.

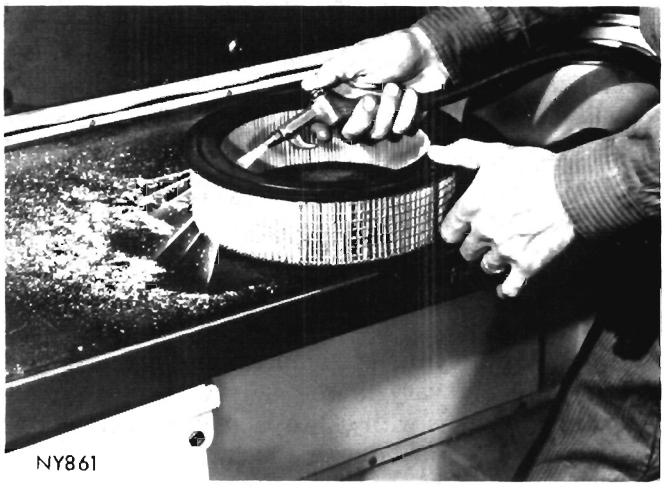

Fig. 1—Cleaning Filter Element

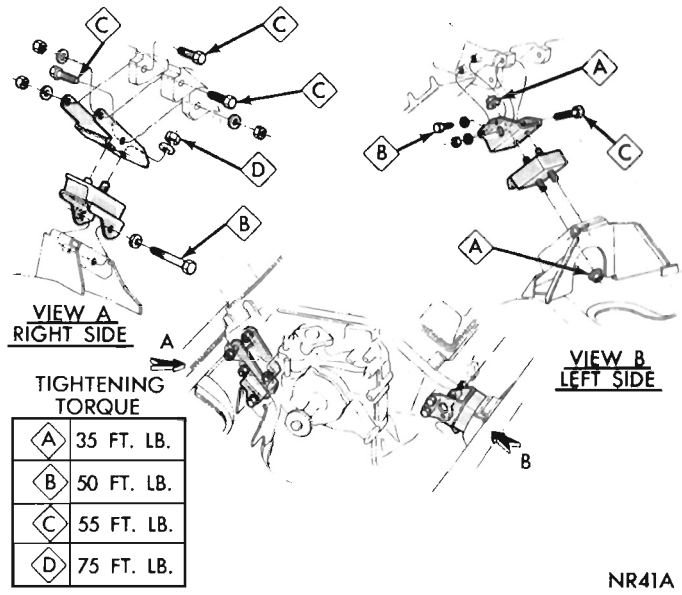

Fig. 2—Front Engine Mounts—Barracuda

FRONT ENGINE MOUNTS (Figs. 2 and 3)

Removal

(1) Disconnect throttle linkage at transmission and at carburetor.

(2) Raise hood and position fan to clear radiator hose and radiator top tank.

(3) Remove torque nuts from insulator studs.

(4) Raise engine just enough to remove front engine mount assembly.

Installation

(1) Install insulator to engine bracket and tighten to specified torque.

(2) Lower the engine and install washers and pre-

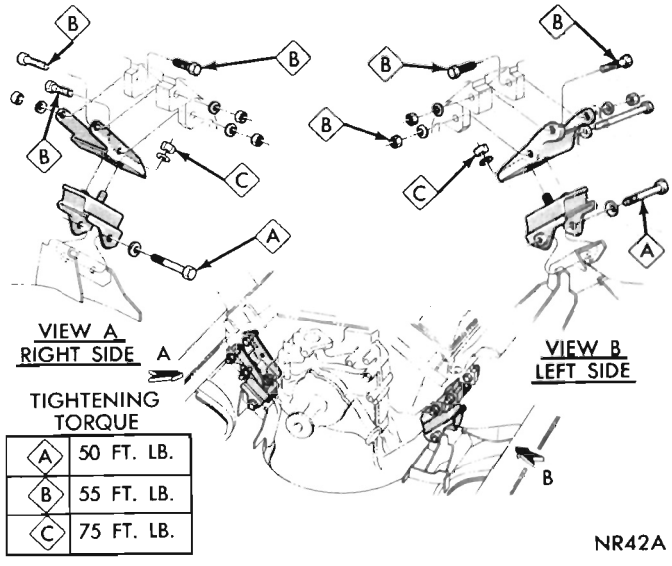

Fig. 3—Front Engine Mounts—Satellite and Fury

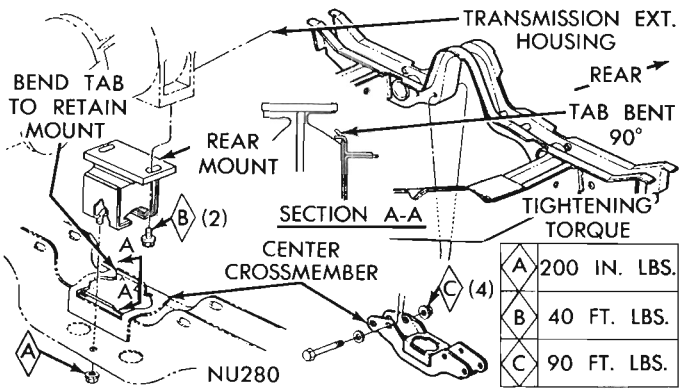

Fig. 4—Engine Rear Support—Barracuda

vailing torque nuts to insulator studs; tighten nuts to specified torque.

(3) Connect throttle at transmission and carburetor.

REAR ENGINE MOUNTS (Figs. 4, 5, 6 and 7)

Removal

(1) Raise vehicle on hoist.

(2) Install transmission jack.

(3) Remove rear engine crossmember from frame and remove rear mount.

Installation

(1) Install rear engine mount to crossmember and tighten nut to specified torque.

(2) Install rear crossmember to frame and tighten bolts to specified torque.

ENGINE ASSEMBLY

Removal

(1) Scribe the outline of hinge brackets on hood to assure proper adjustments when installing.

(2) Remove hood.

(3) Drain cooling system and remove battery.

(4) Remove all hoses, fan shroud, disconnect oil cooler lines and remove radiator.

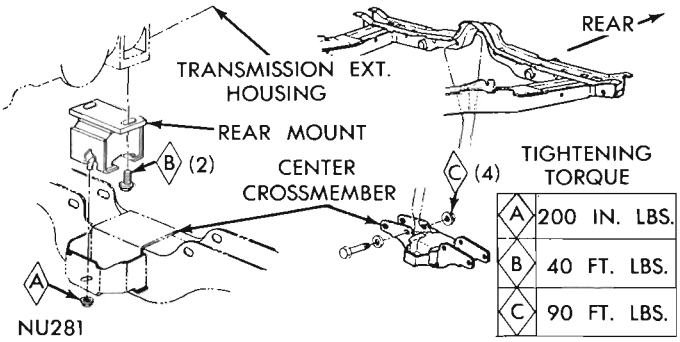

Fig. 5—Engine Rear Support—Satellite Except 4 Speed Transmission

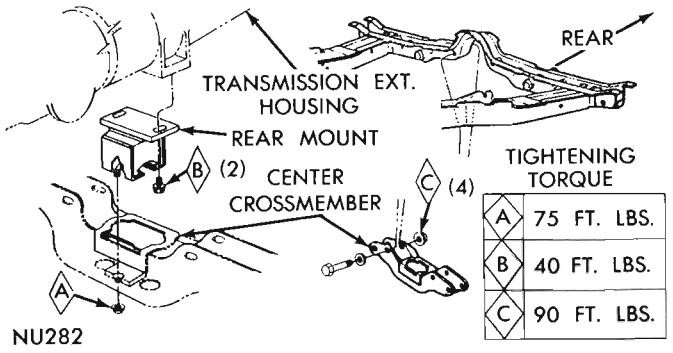

Fig. 6—Engine Rear Support—Satellite with 4 Speed Transmission

(5) Disconnect fuel lines and wires attached to engine units. Remove air cleaner and carburetor.

(6) Attach engine lifting fixture to carburetor flange studs on intake manifold.

(7) Raise vehicle on a hoist and install engine support fixture Tool C-3487 to support rear of engine.

(8) Drain transmission and torque converter.

(9) Disconnect exhaust pipes at manifolds, propeller shaft, wires, linkage, cable, and oil cooler lines at the transmission.

(10) Remove engine rear support crossmember and remove transmission from vehicle.

(11) Lower vehicle and attach chain hoist to fixture eyebolt.

(12) Remove engine front mounting bolts. Raise engine with a chain hoist and work engine out of chassis.

(13) Place engine in repair stand Tool C-3167 and adapter C-3662 for disassembly, using transmission mounting bolts.

Installation

(1) Attach engine lifting fixture to carburetor flange studs on intake manifold.

(2) Attach chain hoist to fixture eyebolt.

(3) Remove engine from repair stand and lower engine carefully until engine is positioned in vehicle.

(4) Install engine support fixture Tool C-3487 and adjust to support rear of engine.

(5) Remove chain hoist from fixture eyebolt.

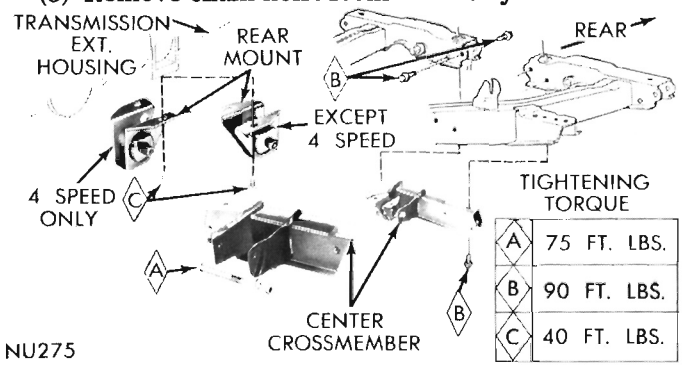

Fig. 7—Engine Rear Support—Fury

(6) Raise vehicle on hoist, install and tighten engine front support mounting bolts.

(7) Install transmission and engine rear support crossmember.

(8) Lower engine into position and install engine rear support crossmember bolts. Remove engine support fixture Tool C-3487.

(9) Connect propeller shaft, wires, linkage, cable, oil cooler lines at the transmission, connect exhaust pipes to manifold using new gaskets. Install transmission filler tube.

(10) Lower vehicle and install radiator, fan shroud, hoses, oil cooler lines and connect all wires and linkage.

(11) Remove engine lifting fixture from intake manifold and install carburetor and fuel lines. Connect throttle linkage.

(12) Install hood, using scribe marks for proper alignment.

(13) Close all drain cocks and fill cooling system.

(14) Fill engine crankcase and transmission. Refer to "Lubrication" Group 0 for quantities and lubricants to use and check entire system for leaks and correct as necessary.

Whenever an engine has been rebuilt and/or a new camshaft and/or tappets are installed, one quart of engine supplement, Chrysler Part Number 1879406 or equivalent should be added to the engine oil to aid in break-in. The oil mixture should be left in the engine for a minimum of 500 miles. Drain the oil mixture at the next normal oil change.

(15) Start engine and run engine until normal operating temperature is reached.

(16) Inspect ignition timing and adjust carburetor as necessary.

(17) Adjust accelerator and transmission linkages. Road test vehicle.

ROCKER ARMS AND SHAFT ASSEMBLY

The rocker arms are of stamped steel and are arranged on one rocker arm shaft, per cylinder head. The push rod angularity tends to force the pairs of rocker arms toward each other where oilite spacers carry the side thrust at each rocker arm. The rocker shaft is held in place by bolts and stamped steel retainers attached to the five brackets on the cylinder head.

Removal

(1) Remove cylinder head cover and gasket.

(2) Remove rocker shaft bolts and retainers and remove rocker arms and shaft assembly.

(3) If rocker arm assemblies have been disassembled for cleaning, inspection, or replacement, refer to Figure 8 for proper reassembly.

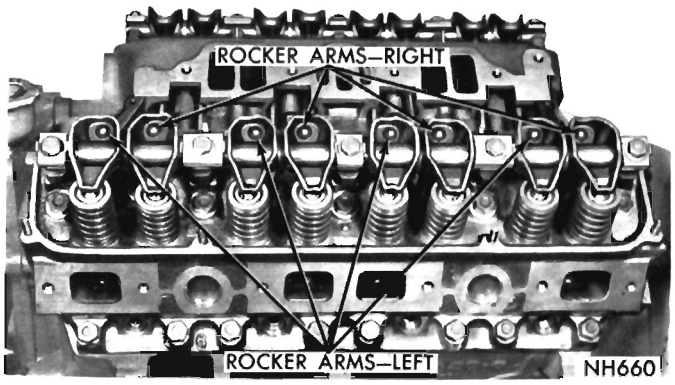

Fig. 8—Rocker Arm Assemblies Installed

Installation

(1) Install rocker arms and shaft assembly making sure to install the long stamped steel retainers in the number two and four positions.

(2) Install rocker shafts so that 3/16 inch diameter rocker arm lubrication holes point downward into the rocker arm, so that the 15° angle of these holes point outward towards the valve end of the rocker arms, (Fig. 9). This is necessary to provide proper lubrication to the rocker assemblies.

The 15° angle of the rocker arm lubrication holes is determined from the center line of the bolt holes through the shaft which are used to attach the shaft assembly to the cylinder head.

(3) Tighten rocker shaft bolts to 25 foot-pounds.

(4) Place new cylinder head cover gaskets in position and install cylinder head covers. Tighten nuts to 40 inch-pounds.

(5) Install closed crankcase ventilation system.

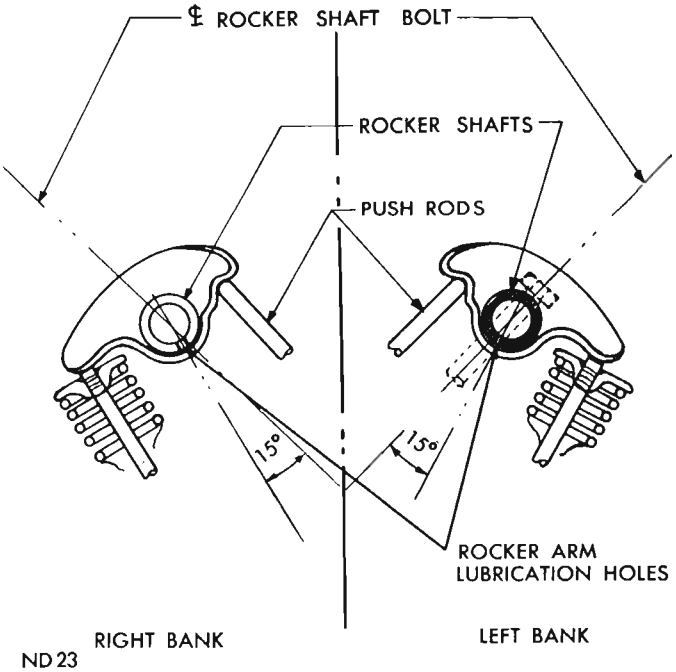

Fig. 9—Rocker Arm Lubrication Holes

CYLINDER HEADS

The chrome alloy cast iron cylinder heads are held in place by 17 bolts. The spark plugs enter the cylinder head horizontally and are located at the wedge of the combustion chambers.

Removal

(1) Drain cooling system.
(2) Remove alternator, carburetor, air cleaner and fuel line.
(3) Disconnect accelerator linkage.
(4) Remove vacuum control tube at carburetor and distributor.
(5) Disconnect distributor cap, coil wires and heater hose.
(6) Disconnect heat indicator sending unit wire.
(7) Remove spark plugs.
(8) Remove intake manifold, ignition coil and carburetor as an assembly.
(9) Remove tappet chamber cover.
(10) Remove cylinder head covers and gaskets.
(11) Remove exhaust manifolds.
(12) Remove rocker arm and shaft assemblies. Remove push rods and **identify to insure installation in original location.**
(13) Remove the 17 heads bolts from each cylinder head and remove cylinder heads.
(14) Place cylinder head in holding fixture Tool C-3626.

Installation

(1) Clean gasket surfaces of the cylinder block and cylinder head. Remove all burrs from edges of cylinder heads.
(2) Inspect all surfaces with a straightedge if there is any reason to suspect leakage.
(3) Coat new gaskets lightly with a suitable sealer, Chrysler Number 1057794 or equivalent. Install gaskets and cylinder heads.
(4) Install cylinder head bolts. Starting at top center, tighten all cylinder head bolts to 50 foot-pounds in sequence (Fig. 10).

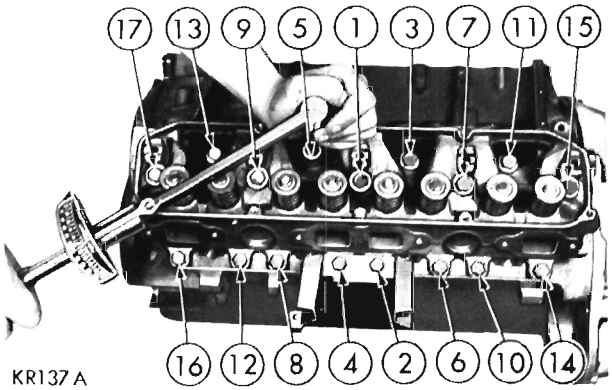

Fig. 10—Cylinder Head Tightening Sequence

Repeat the procedure, tightening all head bolts to 70 foot-pounds.
(5) Inspect push rods and replace any worn or bent rods.
(6) Install push rods in the tappets maintaining alignment, using rod, (Fig. 11).
(7) Install rocker arm and shaft assembly starting each push rod into its respective rocker arm socket (Fig. 8) making sure to install the long stamped steel retainers in the number two and four positions, **tighten bolts to 25 foot-pounds.**
(8) Place new cylinder head gasket in position and install cylinder head covers. Tighten nuts to 40 inch-pounds.
(9) Install exhaust manifolds and tighten nuts to 30 foot-pounds.
(10) Adjust spark plugs to .035 inch gap and install plugs, tighten plugs to 30 foot-pounds.
(11) Install a new tappet chamber cover and tighten end bolts to 9 foot-pounds.
(12) Install intake manifold, carburetor and ignition coil as an assembly and tighten manifold bolts to 50 foot-pounds.
(13) Install distributor cap. Connect the coil wire, heat indicator sending unit wire, accelerator linkage, spark plug cables and insulators.
(14) Install vacuum hose at carburetor and distributor.
(15) Install alternator and drive belts. Tighten alternator adjusting strap bolt to 200 inch-pounds, and alternator mounting bolt to 30 foot-pounds.
(16) Install fuel line and carburetor air cleaner.
(17) Fill cooling system. Adjust belt tensions as outlined in "Cooling System" Group 7.

VALVES AND VALVE SPRINGS

Valves are arranged in-line in the cylinder heads and inclined 30 degrees outward from vertical. The

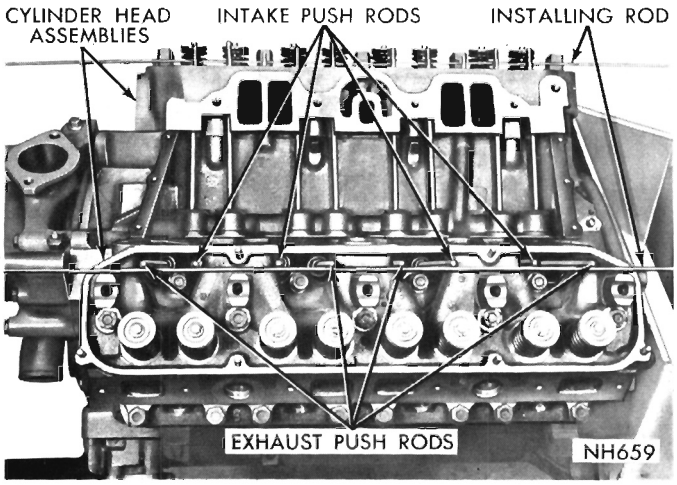

Fig. 11—Push Rods Installed

intake and exhaust valves operate in guides that are cast integral with the heads.

Removal

(1) With cylinder head removed, compress valve springs, using Tool C-3422A, (Fig. 12).

(2) Remove valve retaining locks, valve spring retainers, valve stem cup seals and valve springs.

(3) Before removing valves, remove any burrs from valve stem lock grooves to prevent damage to the valve guide. **Identify valves to insure installation in original location.**

Valve Inspection

(1) Clean valves thoroughly, and discard any burned, warped or cracked valves.

(2) Measure valve stems for wear. The intake valve stem diameter should measure .372 to .373 inch and the exhaust valve stem diameter should measure .371 to .372 inch. If wear exceeds .022 inch, replace the valve.

(3) Remove carbon and varnish deposits from inside of valve guides with cleaner, Tool C-756.

(4) Measure valve stem guide clearance as follows: Install sleeve Tool C-3973 over valve stem (Fig. 13) and install valve.

(5) The special sleeve places the valve at the correct height for measuring with a dial indicator. Attach dial indicator Tool C-3339 to the cylinder head and set it at a right angle to the valve stem being measured (Fig. 14).

(6) Move valve to and from the indicator. Total dial indicator reading should not exceed .017 inch. If the dial indicator reading is excessive or if the stems are scored or worn excessively, ream the guides for new

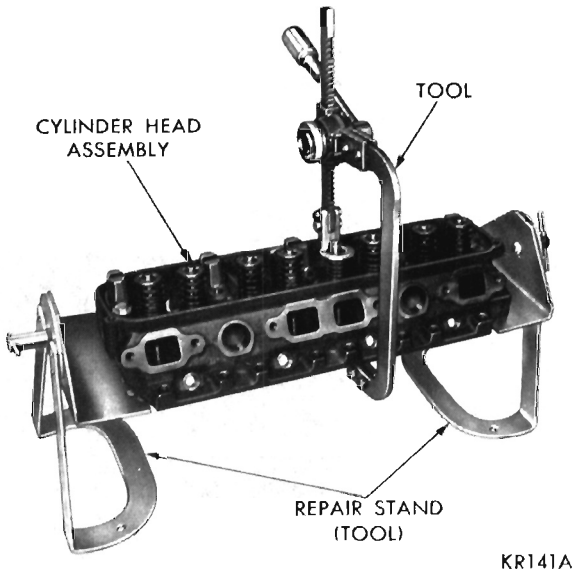

Fig. 12—Compressing Valve Spring

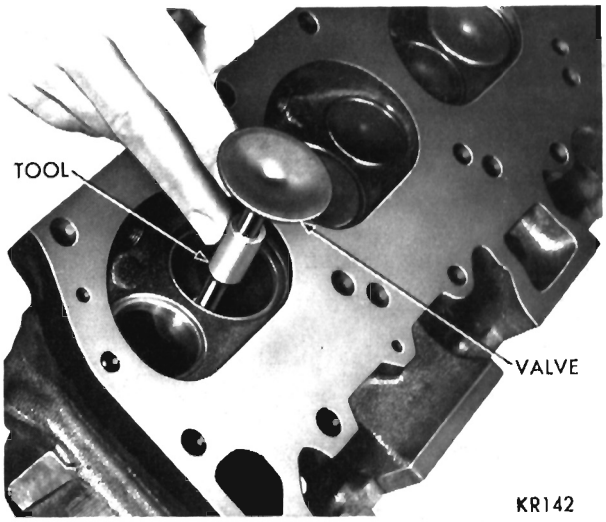

Fig. 13—Installing Valve and Tool C-3973

valves with oversize stems.

(7) Service valves with oversize stems are available in .005, .015 and .030 inch oversize. Reamers to accommodate the oversize valve stem are as follows:

Reamer Tool Number	Reamer Oversize	Valve Guide Size
C-3433	.005 in.	.379-.380 in.
C-3430	.015 in.	.389-.390 in.
C-3427	.030 in.	.404-.405 in.

(8) Slowly turn reamer by hand and clean guide thoroughly before installing new valve. **Do not attempt to ream the valve guides from standard directly to .030 inch. Use step procedure of .005, .015 and .030 inch so the valve guides may be reamed true in relation to the valve seat.**

Refacing Valves and Valve Seats

The intake and exhaust valve faces have a 45 degree angle. Always inspect the remaining valve margin after the valves are refaced (Fig. 15). Valves with less than 3/64 inch margin should be discarded.

(1) The angle of both the valve and seat should be identical. When refacing valve seats, it is important

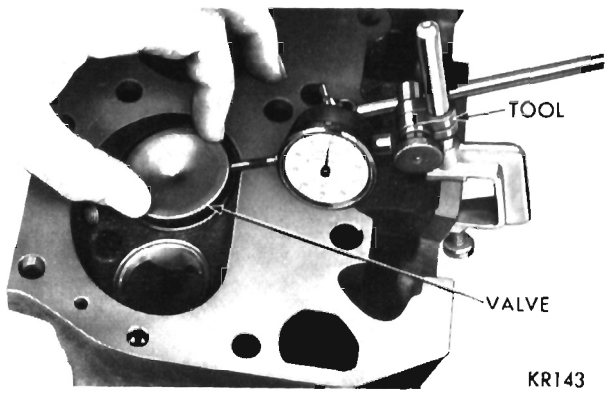

Fig. 14—Measuring Valve Guide Wear

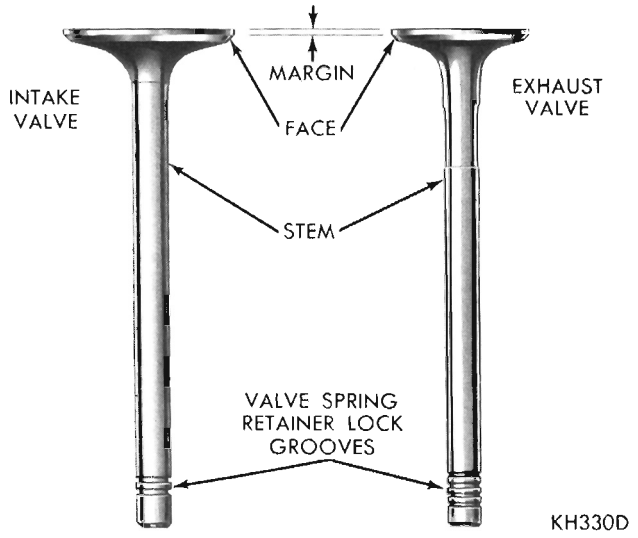

Fig. 15—Intake and Exhaust Valves

that the correct size valve guide pilot be used for reseating stones. A true and complete valve seat surface must be obtained.

(2) Inspect valve seat with Prussian blue to determine where valve contacts seat. To do this, coat valve seat lightly with Prussian blue, then set valve in place. Rotate valve with light pressure. If the blue is transferred to the center of the valve face, the contact is satisfactory. If the blue is transferred to the top edge of the valve face, lower the valve seat with a 30° stone. If the blue is transferred to the bottom edge of the valve face raise the valve seat with a 60° stone.

(3) When the seat is properly positioned the width of the intake seats should be 1/16 to 3/32 inch. The width of the exhaust seats should be 3/64 to 1/16 inch.

(4) Measure the concentricity of the valve seat using dial indicator No. 13725. The total runout should not exceed .003 inch (total indicator reading).

(5) When valves and seats are reground, the position of the valve in the cylinder head is changed, shortening the operating length of the hydraulic tappet. This means that the plunger is operating closer to its "bottomed" position, and less clearance is available for thermal expansion of the valve mechanism during high speed driving.

(6) The design of the valve mechanism includes a safety factor to allow for a limited amount of wear, and the refacing of the valves and seats.

(7) To insure that limits have not been exceeded, the dimension from valve spring seat in the head to the valve tip should be measured with gauge, Tool C-3648 (Fig. 16).

(8) The end of the cylindrical gauge and the bottom of slotted area represent the maximum and minimum allowable extension of the valve stem tip beyond the spring seat.

(9) If the tip exceeds the maximum, grind stem tip to within gauge limits. Clean tappets if tip grinding is required.

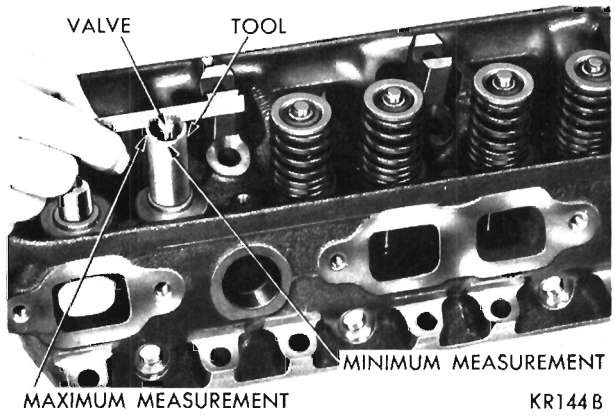

Fig. 16—Measuring Valve Stem Length

Testing the Valve Springs (Fig. 17)

(1) Whenever valves are removed for inspection, reconditioning or replacement, the valve springs should be tested. As an example, the compressed length of the spring to be tested is 1-15/32 inches. Turn the table of Tool C-647 until the surface is in line with the 1-15/32 inch mark on the threaded stud and the zero mark to the front. Place the spring over the stud on the table and lift the compressing lever to set the tone device. Pull on the torque wrench until a ping is heard. Take the reading on torque wrench at this instant. Multiply this reading by two. This will give the spring load at the test length. Fractional measurements are indicated on the table for finer adjustments. Refer to specifications to obtain specified height and allowable tension. Discard the springs that do not meet specifications.

(2) Inspect each valve spring for squareness at both

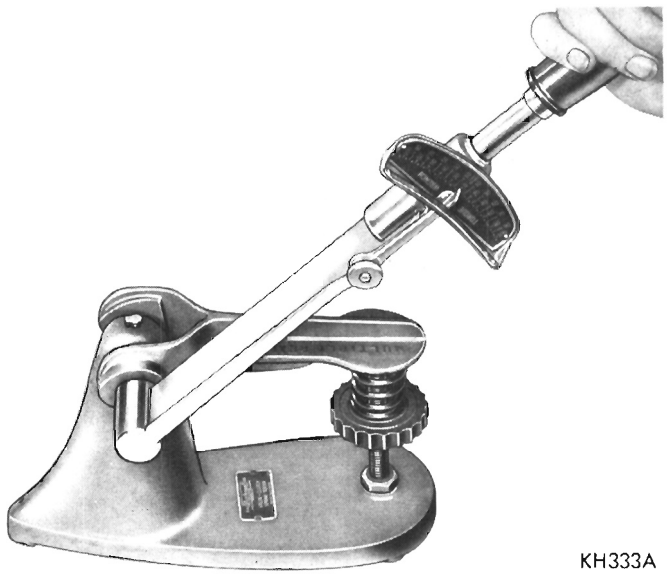

Fig. 17—Testing Valve Springs

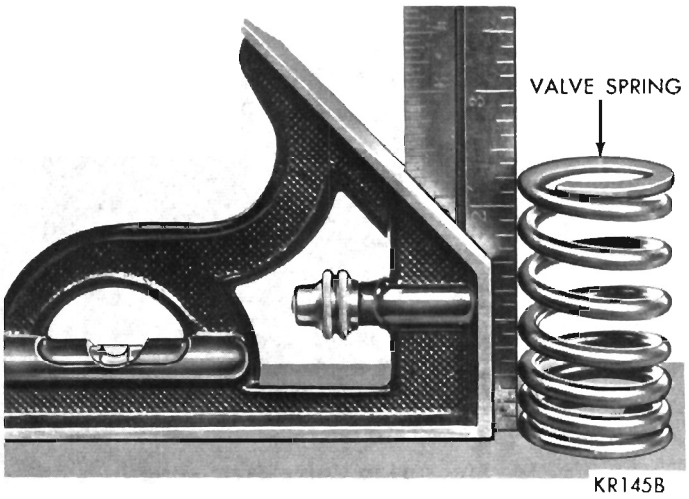

Fig. 18—Inspecting Valve Spring Squareness

ends with a steel square and surface plate (Fig. 18).

(3) If the spring is more than 1/16 inch out of square, install a new spring.

Installation

(1) Coat valve stems with lubricating oil and insert them in position in cylinder head.

(2) Install new cup seals on the intake and exhaust valve stems and over valve guides (Fig. 19 and 20) and install valve springs and retainers.

(3) Compress valve springs with Tool C-3422A. Install locks and release tool.

If valves and/or seats are reground, measure installed height of the springs. Make sure measurement is taken from the bottom of spring seat in cylinder head to bottom surface of spring retainer. If the height is greater than 1-57/64 inches, install a 1/16 inch spacer in the head counterbore to bring the spring height back to normal 1-53/64 to 1-57/64 inch.

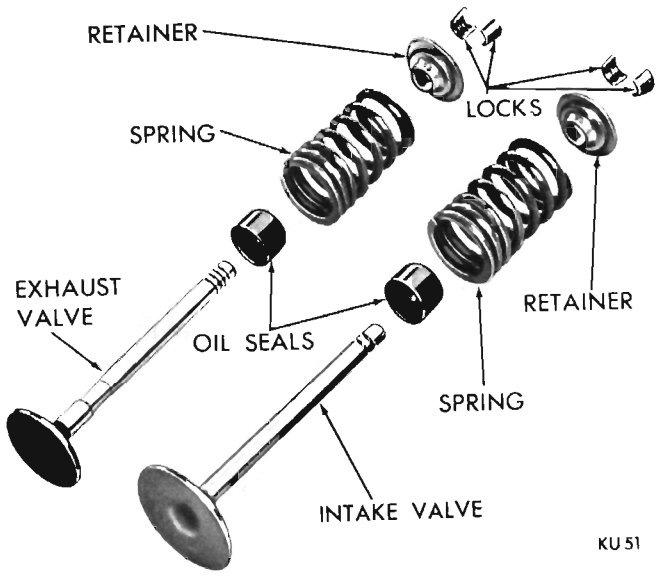

Fig. 19—Valve Assembly (Disassembled View)

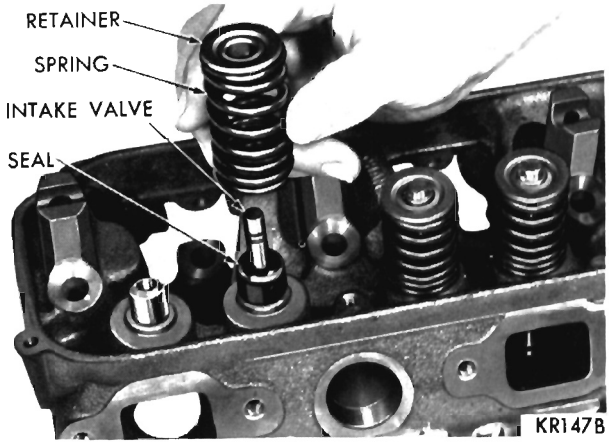

Fig. 20—Installing Valve, Spring, Cup Seal and Retainer

(If spacers are installed, measure from the top of the spacer.)

HYDRAULIC TAPPETS

Preliminary to Checking the Hydraulic Tappets

(1) Before disassembling any part of the engine to correct tappet noise, read the oil pressure at the gauge (Install a reliable gauge at pressure sending unit if vehicle has no oil pressure gauge.) and check the oil level in the oil pan. The pressure should be between 45 and 65 pounds at 1000 R.P.M.

(2) The oil level in the pan should never be above the "full" mark on dipstick, or below the "add oil" mark. Either of these two conditions could be responsible for noisy tappets.

Oil Level Too High

If oil level is above the "full" mark on dipstick, it is possible for the connecting rods to dip into the oil while engine is running and create foam. Foam in oil pan would be fed to the hydraulic tappets by the oil pump causing them to lose length and allow valves to seat noisily.

Oil Level Too Low

Low oil level may allow oil pump to take in air which, when fed to the tappets, causes them to lose length and allows valves to seat noisily. Any leaks on intake side of pump through which air can be drawn will create the same tappet action. When tappet noise is due to aeration, it may be intermittent or constant, and usually more than one tappet will be noisy. When oil level and leaks have been corrected, engine should be operated at fast idle for sufficient time to allow all of the air inside of the tappets to be bled out.

Tappet Noise Diagnosis

(1) To determine source of tappet noise, operate

engine at idle with cylinder head covers removed.

(2) Feel each valve spring or rocker arm to detect noisy tappet. The noisy tappet will cause the affected spring and/or rocker arm to vibrate or feel rough in operation.

Worn valve guides or cocked springs are sometimes mistaken for noisy tappets. If such is the case, noise may be dampened by applying side thrust on the valve spring. If noise is not appreciably reduced, it can be assumed the noise is in the tappet. Inspect the rocker arm push rod sockets and push rod ends for wear.

(3) Valve tappet noise ranges from light noise to a heavy click. A light noise is usually caused by excessive leakdown around the unit plunger which will necessitate replacing the tappet, or by the plunger partially sticking in the tappet body cylinder. A heavy click is caused either by a tappet check valve not seating, or by foreign particles becoming wedged between the plunger and the tappet body, causing the plunger to stick in the down position. This heavy click will be accompanied by excessive clearance between the valve stem and rocker arm as valve closes. In either case, tappet assembly should be removed for inspection and cleaning.

Tappet Removal

(1) The tappet can be removed without removing intake manifold or cylinder heads by following this recommended procedure: Remove cylinder head covers.

(2) Remove rocker arms and shaft assembly.

(3) Remove push rods and **identify to insure installation in original location.**

(4) Slide a magnetic pickup tool through push rod opening in cylinder head and seat tool firmly in the head of tappet.

(5) Pull tappet out of bore with a twisting motion. If all tappets are to be removed, **identify tappets to insure installation in original location.**

A diamond shaped marking stamped on the engine numbering pad indicates that some tappet bodies are .008 inch oversize.

CAUTION: The plunger and tappet bodies are not interchangeable. The plunger and valve must always be fitted to the original body. It is advisable to work on one tappet at a time to avoid mixing of parts. Mixed parts are not compatible. Do not disassemble a tappet on a dirty work bench.

Disassembly (Fig. 21)

(1) Pry out plunger retainer spring clip.

(2) Clean varnish deposits from inside of tappet body above plunger cap.

(3) Invert tappet body and remove plunger cap, plunger, flat check valve, check valve spring, check valve retainer and plunger spring.

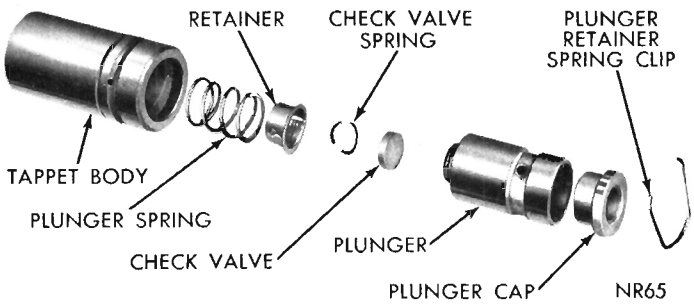

Fig. 21—Hydraulic Tappet Assembly (Disassembled View)

Cleaning and Assembly

(1) Clean all tappet parts in a solvent that will remove all varnish and carbon.

(2) Replace tappets that are unfit for further service with new assemblies.

(3) If plunger shows signs of scoring or wear and valve is pitted, or if valve seat on end of plunger indicates any condition that would prevent valve from seating, install a new tappet assembly.

(4) Assemble tappets (Fig. 21).

Testing

(1) Fill a pan with clean kerosene.

(2) Remove cap from plunger and plunger from tappet body.

(3) Fill tappet body with kerosene and install plunger.

(4) Unseat check valve with a brass rod to permit complete installation of plunger. Replace cap.

(5) Hold tappet in an upright position and insert lower jaw of pliers, Tool C-3160, in the groove of tappet body (Fig. 22).

(6) Engage jaw of pliers with top of tappet plunger. Test leakdown by compressing the pliers. If plunger collapses almost instantly as pressure is applied, disassemble tappet, clean and test again (Fig. 22).

(7) If tappet still does not operate satisfactorily after cleaning, install a new tappet assembly.

If the tappet or bore in cylinder block is scored,

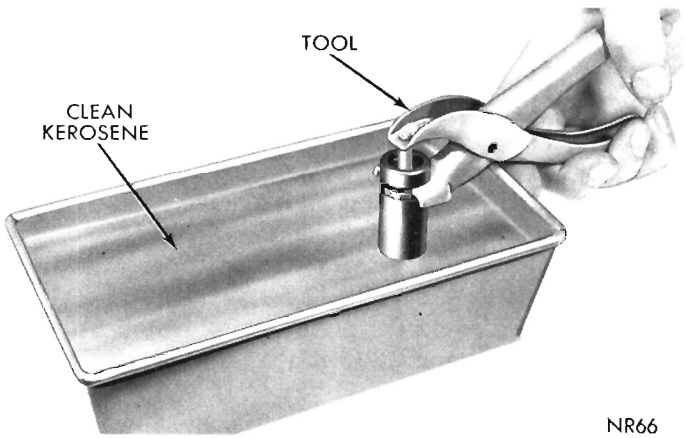

Fig. 22—Testing Tappet Using Tool C-3160

scuffed, or shows signs of sticking, ream the bore to next oversize.

Installation

(1) Lubricate tappets.

(2) Install tappets and push rods in their original positions.

(3) Install rocker arm and shaft assembly.

(4) Start and operate engine. Warm up to normal operating temperature.

CAUTION: To prevent damage to valve mechanism, engine must not be run above fast idle until all hydraulic tappets have filled with oil and have become quiet.

VALVE TIMING

(All Models)

(1) Turn crankshaft until NO. 6 exhaust valve is closing and NO. 6 intake valve is opening.

(2) Insert a 1/4 inch spacer between rocker arm pad and stem tip of NO. 1 intake valve (second valve on the left bank).

(3) Install a dial indicator so plunger contacts valve spring retainer as nearly perpendicular as possible.

(4) Allow spring load to bleed tappet down giving in effect a solid tappet. Zero the indicator.

(5) Turn the crankshaft clockwise (normal running direction) until intake valve has lifted .025 inch with 256-260° camshaft and .033 inch with 268-284° camshaft. See specifications for engine application. The timing on the timing indicator, located on the chain case cover, should read from 10 degrees BTDC to 2 degrees ATDC. If the reading is not within specified limits: Inspect timing sprocket index marks, inspect timing chain for wear, and determine accuracy of the DC mark on timing indicator. Turn crankshaft counterclockwise until valve is closed and remove the indicator and spacer.

CAUTION: Do not turn crankshaft any further clockwise, as the valve spring might bottom and result in serious damage.

TIMING CHAIN COVER, OIL SEAL AND CHAIN

Cover Removal

(1) Drain cooling system and remove radiator and water pump assembly.

(2) Remove crankshaft vibration damper attaching bolt.

(3) Remove two of the pulley bolts, install Tool C-3688, and pull damper assembly off end of crankshaft (Fig. 23).

(4) Remove chain cover and gasket. **It is normal to find particles of neoprene collected between seal retainer and crankshaft oil slinger after seal has been in operation.**

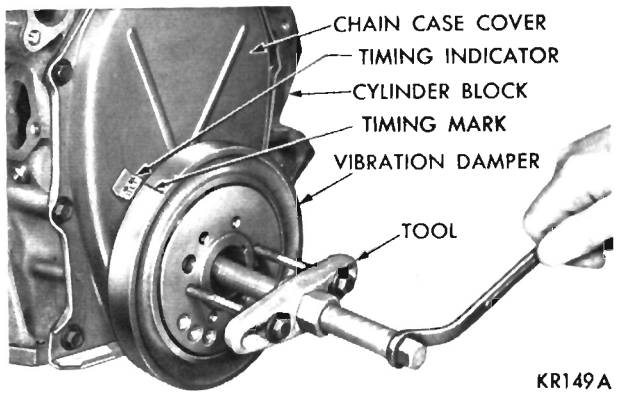

Fig. 23—Removing Vibration Damper Assembly

(5) Slide crankshaft oil slinger off end of crankshaft.

Measuring Timing Chain for Stretch

(1) Place a scale next to the timing chain so any movement of the chain may be measured.

(2) Place a torque wrench and socket over camshaft sprocket attaching bolt and apply torque in the direction of crankshaft rotation to take up slack; 30 foot-pounds (with cylinder heads installed) or 15 foot-pounds (cylinder heads removed). **With torque applied to the camshaft sprocket bolt, crankshaft should not be permitted to move. It may be necessary to block crankshaft to prevent rotation.**

(3) Holding a scale with dimensional reading even with edge of a chain link, apply torque in the reverse direction 30 foot-pounds (with cylinder heads installed) or 15 foot-pounds (cylinder heads removed), and note amount of chain movement (Fig. 24).

(4) Install a new timing chain, if its movement exceeds 3/16 inch.

(5) If chain is satisfactory, slide crankshaft oil

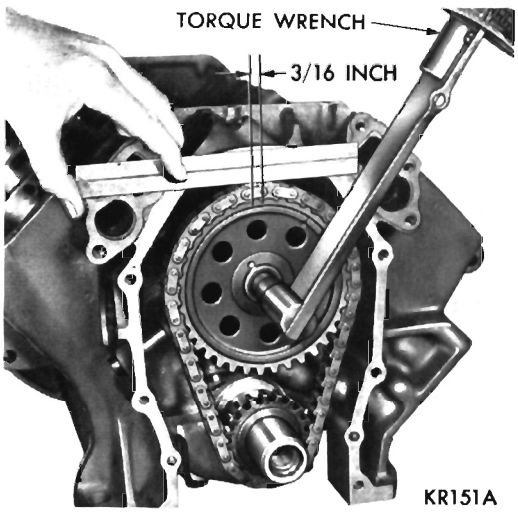

Fig. 24—Measuring Timing Chain Stretch

slinger over shaft and up against sprocket (flange away from sprocket).

(6) If chain is not satisfactory, remove camshaft sprocket attaching bolt and remove timing chain with crankshaft and camshaft sprockets.

When installing timing chain, use Tool C-3509 to prevent camshaft from contacting the welch plug in the rear of engine block. Remove distributor and oil pump-distributor drive gear. Locate tool against rear side of cam gear and attach tool with distributor retainer plate bolt (Fig. 25).

(7) Place camshaft sprocket and crankshaft sprocket on the bench with timing marks on exact imaginary center line through both camshaft and crankshaft sprocket bores.

(8) Place timing chain around both sprockets.

(9) Turn crankshaft and camshaft to line up with keyway location on crankshaft sprocket and dowel hole in camshaft sprocket.

(10) Lift sprockets and chain (keep sprockets tight against chain in position as described).

(11) Slide both sprockets evenly over their respective shafts.

(12) Use a straight edge to measure alignment of timing marks (Fig. 26).

(13) Install washer and camshaft sprocket bolt, tighten to 35 foot-pounds. Check to be sure that rear face of aluminum camshaft sprocket is **flush** with end of camshaft. Slide the crankshaft oil slinger over shaft and up against sprocket (flange away from sprocket).

Oil Seal Replacement (Cover Removed)

(1) Position remover screw of Tool C-3506 through case cover, inside of case cover up. Position remover blocks directly opposite each other, and force the angular lip between the neoprene and flange of seal retainer.

(2) Place washer and nut on remover screw. Tighten nut, forcing the blocks into the gap to a point of distorting the seal retainer lip (Fig. 27). This is important, **remover is only positioned at this point.**

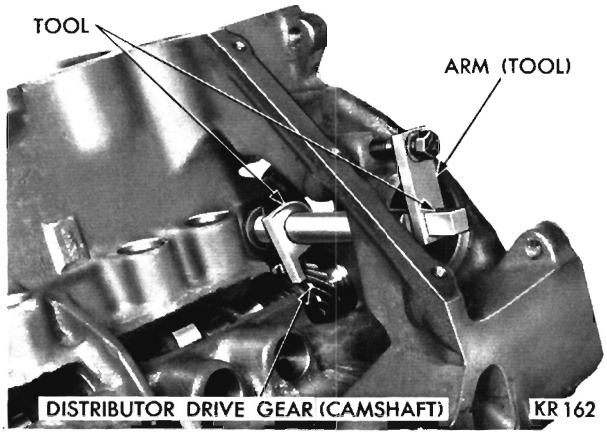

Fig. 25—Camshaft Holding Tool C-3509

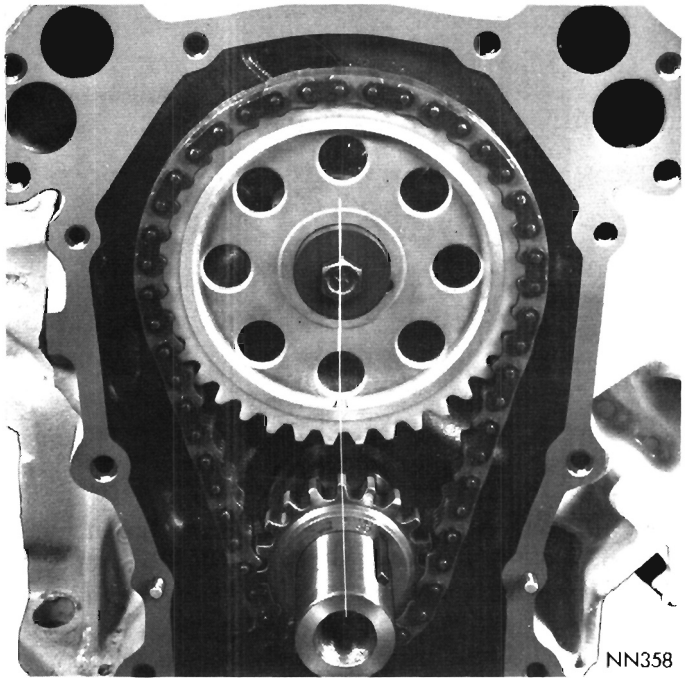

Fig. 26—Alignment of Timing Marks

(3) Place sleeve over retainer and place removing and installing plate into the sleeve.

(4) Place flat washer and nut on the remover screw. Hold center screw and tighten remover nut to remove the seal (Fig. 28).

(5) Insert remover screw through the removing and installing plate so thin shoulder will be facing up.

(6) Insert remover screw with the plate through seal opening (inside of chain case cover facing up).

(7) Place seal in cover opening, with neoprene down. Place seal installing plate into the new seal, with protective recess toward lip of seal retainer (Fig. 29). **The lip of the neoprene seal must be toward source of oil.**

(8) Install flat washer and nut on remover screw, hold screw and tighten nut (Fig. 30).

(9) The seal is properly installed when the neoprene is tight against face of cover. Try to insert a

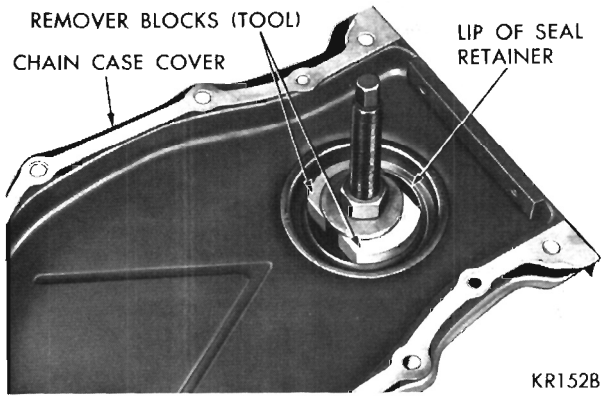

Fig. 27—Remover Blocks Expanded to Puller Position

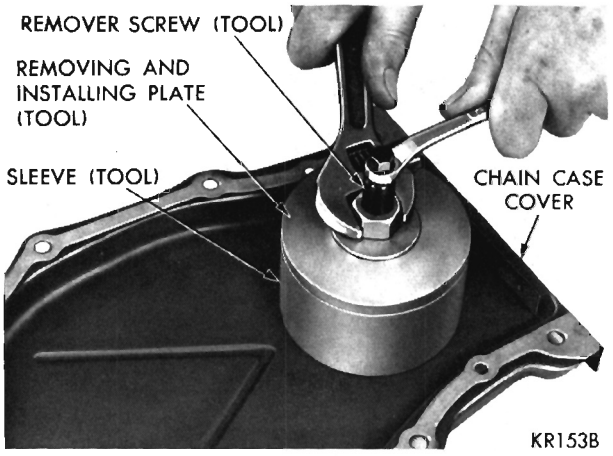

Fig. 28—Removing Oil Seal

.0015 inch feeler gauge between the neoprene and the cover (Fig. 31). If the seal is installed properly, feeler gauge cannot be inserted. **Do not over compress neoprene.**

Cover Installation

(1) Be sure mating surfaces of chain case cover and cylinder block are clean and free from burrs.

(2) Using a new gasket slide chain case cover over locating dowels. Install and tighten bolts to 15 foot-pounds.

(3) Lubricate seal with lubriplate, place damper hub slot on key in crankshaft, and slide vibration damper on crankshaft.

(4) Place installing tool, part of Tool C-3688 in position and press damper on the crankshaft (Fig. 32).

(5) Install damper retainer washer and bolt. Tighten to 135 foot-pounds.

(6) Slide belt pulley over shaft and attach with bolts and lockwashers. Tighten bolts to 200 inch-pounds.

CAMSHAFT

The camshaft has an integral oil pump and distributor drive gear and fuel pump eccentric (Fig. 33).

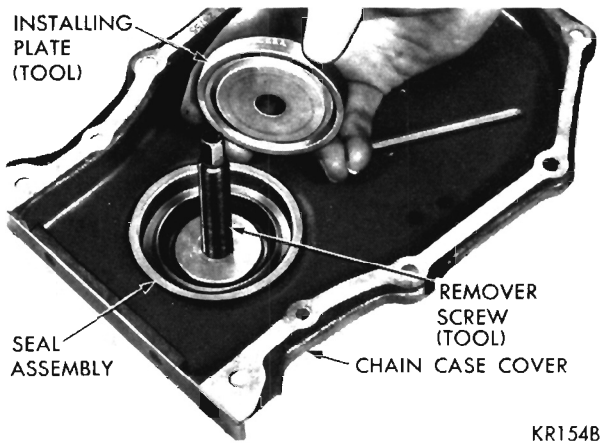

Fig. 29—Positioning Installer Plate

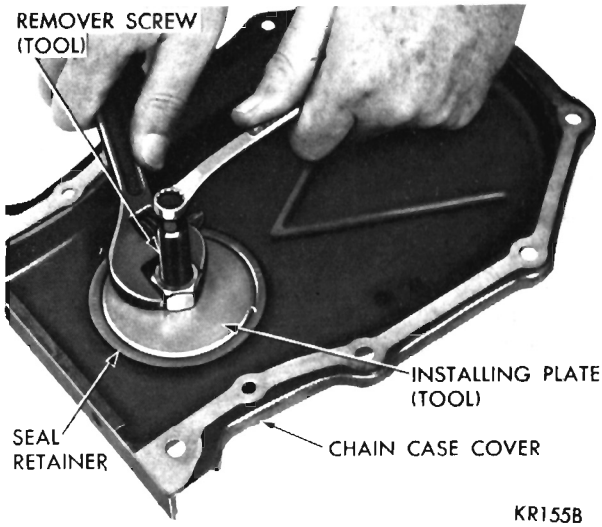

Fig. 30—Installing New Seal

The rearward camshaft thrust is taken by the rear face of the aluminum camshaft sprocket hub, bearing directly on the front of cylinder block, eliminating need for a thrust plate. The helix of the oil pump and distributor drive gear and camshaft lobe taper both tend to provide a rearward thrust.

Removal

(1) With tappets and the timing chain and sprockets

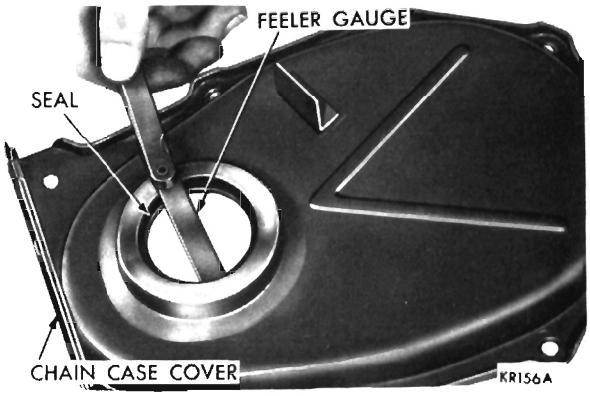

Fig. 31—Inspecting Seal for Proper Seating

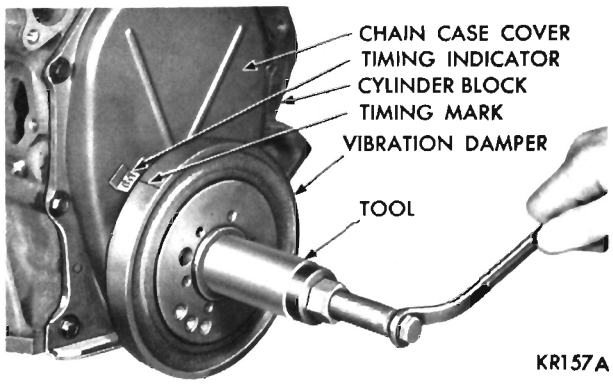

Fig. 32—Installing Vibration Damper Assembly

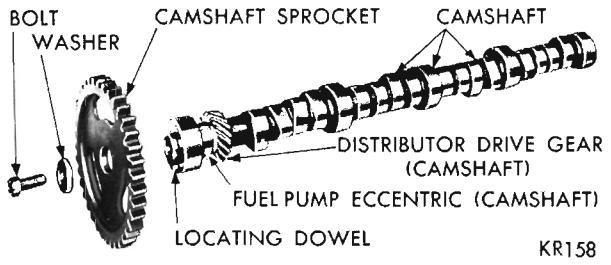

Fig. 33—Camshaft and Sprocket Assembly (Disassembled View)

removed, remove distributor and lift out oil pump and distributor drive shaft.

(2) Remove fuel pump to allow fuel pump push rod to drop away from cam eccentric.

(3) Remove camshaft, being careful not to damage camshaft bearings with the cam lobes.

Installation

(1) Lubricate camshaft lobes and camshaft bearing journals and insert camshaft to within 2 inches of its final position in cylinder block.

(2) Modify Tool C-3509 by grinding off index lug holding the upper arm on the tool and rotate arm 180 degrees.

(3) Install Tool C-3509 in place of distributor drive gear and shaft, as shown in Figure 25.

(4) Hold tool in position with distributor lock plate screw. This tool will restrict camshaft from being pushed in too far and prevent knocking out the welch plug in the rear of cylinder block.

The tool should remain installed until camshaft and crankshaft sprockets and timing chain have been installed.

Whenever an engine has been rebuilt and/or a new camshaft and/or new tappets are installed, one quart of engine supplement, Chrysler Part Number 1879406 or equivalent should be added to the engine oil to aid in break-in. The oil mixture should be left in the engine for a minimum of 500 miles. Drain the oil mixture at the next normal oil change.

Whenever camshaft is replaced, all of tappet faces must be inspected for crown with a straight edge. If any contact surface is dished or worn, tappet must be replaced.

CAMSHAFT BEARINGS (Engine Removed From Vehicle)

Removal

(1) With engine completely disassembled, drive out camshaft rear bearing welch plug.

(2) Install proper size adapters and horse shoe washers (part of Tool C-3132A) at the back of each bearing to be removed and drive out bearings (Fig. 34).

Installation

(1) Install new camshaft bearings with Tool C-3132A. Place new camshaft bearing over proper adapter.

(2) Position bearing in the tool. Install the horse shoe lock and by reversing removal procedure, carefully drive bearing into place.

(3) Install remaining bearings in like manner.

Install the NO. 1 camshaft bearing 1/32 inward from the front face of cylinder block.

The oil holes in camshaft bearings and the cylinder block must be in exact register to insure proper lubrication (Fig. 34).

The camshaft bearing index can be inspected after installation by inserting a pencil flashlight in the bearing. The camshaft bearing oil hole should be perfectly aligned with the drilled oil passage from the main bearing. Other oil holes in the camshaft bearings should be visible by looking down on the left bank oil hole above and between NO. 6 and NO. 8 cylinders to NO. 4 camshaft bearing and on the right bank above and between NO. 5 and 7 cylinders to NO. 4 camshaft bearings. If camshaft bearing oil holes are not in exact register, remove and reinstall them correctly. Install a new welch plug at rear of camshaft. **Be sure this plug does not leak.**

DISTRIBUTOR DRIVE SHAFT BUSHING

Removal

(1) Insert Tool C-3052 into the old bushing and thread down until a tight fit is obtained (Fig. 35).

(2) Hold remover screw and tighten nut until bushing is removed.

Installation

(1) Slide a new bushing over burnishing end of Tool C-3053 and insert tool bushing into the bore.

(2) Drive bushing and tool into position, using a hammer (Fig. 36).

(3) As the burnisher is pulled through the bushing by tightening remover nut, the bushing is expanded

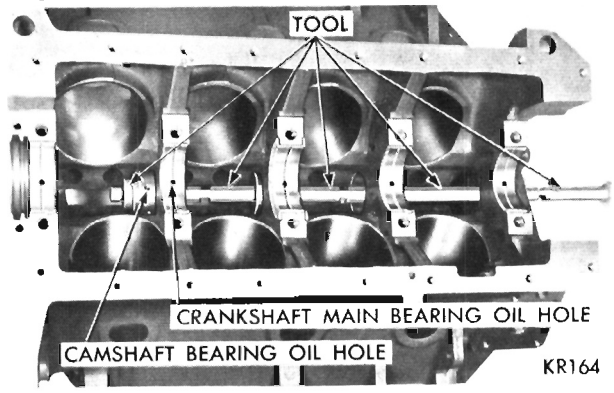

Fig. 34—Removing Camshaft Bearing

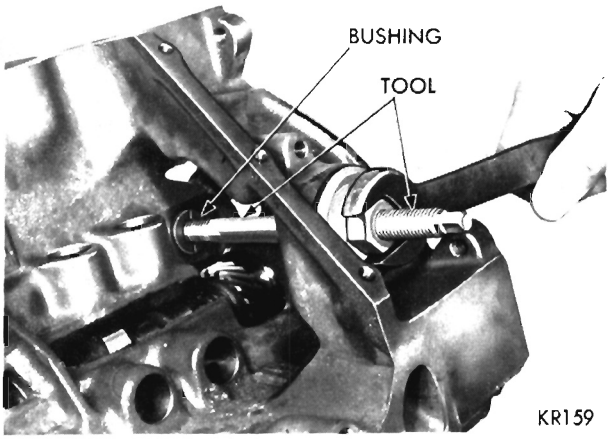

Fig. 35—Removing Distributor Drive Shaft Bushing

tight in the block and burnished to correct size (Fig. 37). **DO NOT REAM THIS BUSHING.**

Distributor Timing

Before installing distributor and oil pump drive shaft, time the engine as follows:

(1) Rotate crankshaft until NO. 1 cylinder is at top dead center on the firing stroke.

(2) When in this position, the straight line on the vibration damper should be under "O" on timing indicator.

(3) Coat shaft and drive gear with engine oil. Install the shaft so that after gear spirals into place, it will index with the oil pump shaft, so slot in top of drive gear will be parallel with center line of crankshaft (Fig. 38).

Installation of Distributor

(1) Hold distributor over mounting pad on cylinder block with vacuum chamber pointing toward center of engine.

(2) Turn rotor until it points forward and to approximate location of No. 1 tower terminal in the distributor cap.

(3) Place distributor gasket in position.

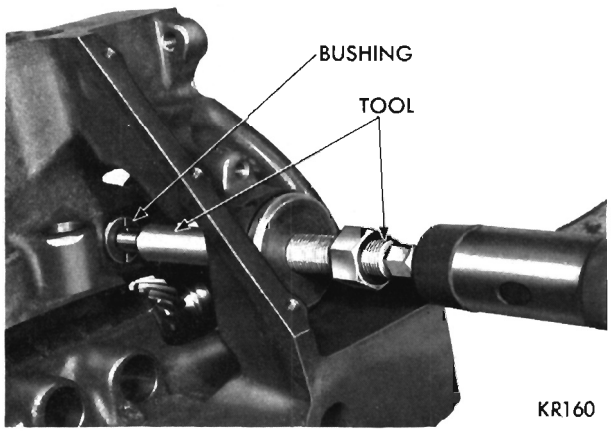

Fig. 36—Installing Distributor Drive Shaft Bushing

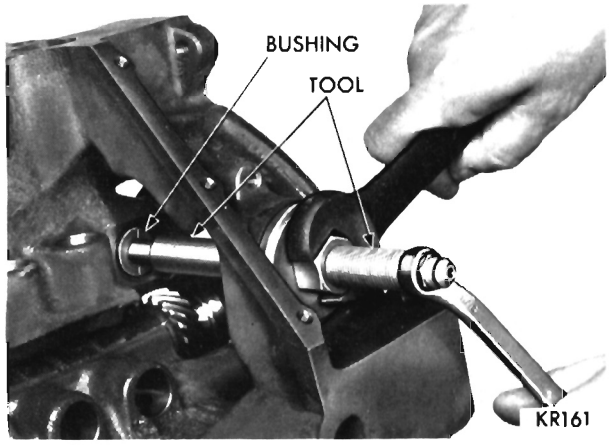

Fig. 37—Burnishing Distributor Drive Shaft Bushing

(4) Lower the distributor and engage the shaft in the slot of distributor drive shaft gear.

(5) Turn distributor clockwise until breaker contacts are just separating, install and tighten hold down clamp.

CYLINDER BLOCK

The cylinder block is of the deep block design which eliminates the need for a torque converter housing adapter plate. Its sides extend three inches below the crankshaft center line.

Piston Removal

(1) Remove top ridge of cylinder bores with a reliable ridge reamer before removing pistons from cylinder block. **Be sure to keep tops of pistons covered during this operation.**

The pistons and connecting rods must be removed from the top of the cylinder block. When removing piston and connecting rod assemblies from the engine, rotate the crankshaft so each connecting rod is centered in cylinder bore.

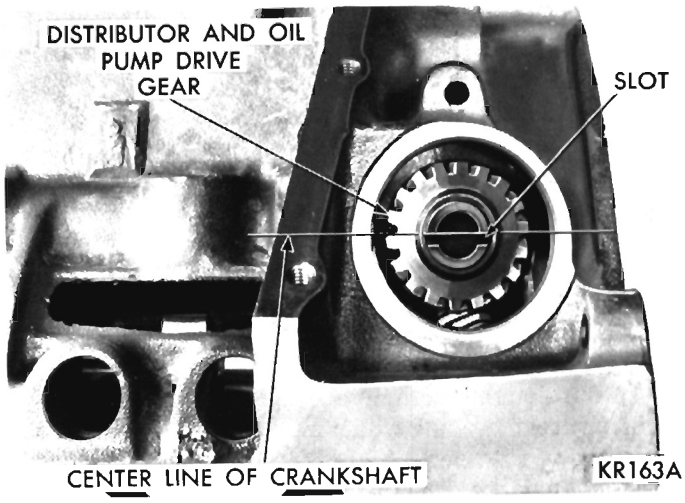

Fig. 38—Distributor Drive Gear Installed

(2) Inspect connecting rods and connecting rod caps for cylinder identification. Identify them if necessary.

(3) Remove connecting rod cap. Install connecting rod bolt guide set on connecting rod bolts. Push each piston and rod assembly out of cylinder bore. **Be careful not to nick crankshaft journals.**

(4) Install bearing caps on mating rods.

Cleaning and Inspection

(1) Clean cylinder block thoroughly and inspect all core hole plugs for evidence of leaking.

(2) If new core plugs are installed, coat edges of plug and core hole with Number 1057794 Sealer or equivalent. Drive the core plug in so that the rim lies at least 1/64″ below the lead-in chamfer.

(3) Examine block for cracks or fractures.

Cylinder Bore Inspection

The cylinder walls should be measured for out-of-round and taper with Tool C-119. If the cylinder bores show more than .005″ out-of-round, or a taper of more than .010″ or if the cylinder walls are badly scuffed or scored, the cylinder block should be rebored and honed, and new pistons and rings fitted. Whatever type of boring equipment is used, boring and honing operation should be closely coordinated with the fitting of pistons and rings in order that specified clearance may be maintained.

Honing Cylinder Bores

Before honing, stuff plenty of clean rags under the bores, over the crankshaft to keep the abrasive materials from entering the crankcase area.

(1) Used carefully, the cylinder bore resizing hone C-823 equipped with 220 grit stones and 390 extensions necessary with 383 and 440 cubic inch engines is the best tool for this job. In addition to deglazing, it will reduce taper and out-of-round as well as removing light scuffing, scoring or scratches. Usually, a few strokes will clean up a bore and maintain the required limits.

(2) Deglazing of the cylinder walls may be done using a cylinder surfacing hone, Tool C-3501, equipped with 280 grit stones (3501-3810) if the cylinder bore is straight and round. 20 to 60 strokes depending on the bore condition will be sufficient to provide a satisfactory surface. Inspect cylinder walls after each 20 strokes. Use honing oil C-3501-3880 or a light honing oil available from major oil distributors. **Do not use engine or transmission oil, mineral oil or kerosene.**

(3) Honing should be done by moving the hone up and down fast enough to get a cross-hatch pattern. When hone marks **intersect** at 60°, cross hatch angle is most satisfactory for proper seating of rings (See Fig. 39).

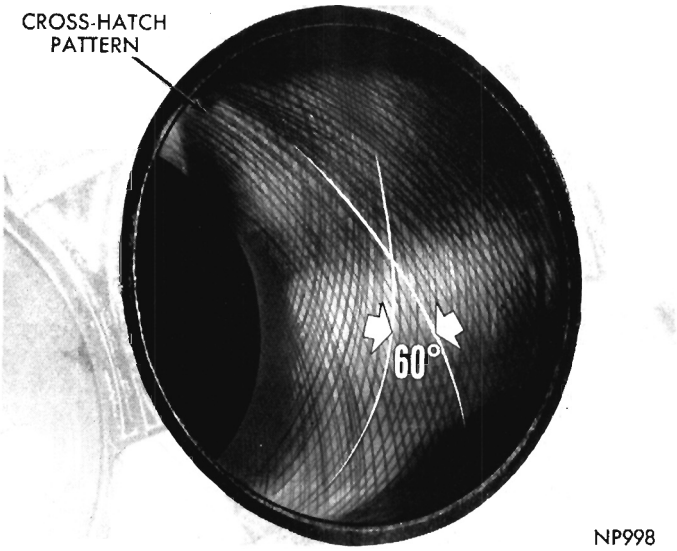

Fig. 39—Cross Hatch Pattern

(4) After honing, it is necessary that the block be cleaned again to remove all traces of abrasives. Wash cylinder block and crankshaft thoroughly.

CAUTION: Be sure all abrasives are removed from the engine parts after honing. It is recommended that a solution of soap and water be used with a brush and the parts then thoroughly dried. The bore can be considered clean when it can be wiped clean with a white cloth and the cloth remains clean. Oil bores after cleaning to prevent rusting.

PISTONS, PINS and RINGS

Pistons

The pistons are cam ground so that the diameter at the pin boss is less than its diameter across the thrust face. This allows for expansion under normal operating conditions. Under operating temperatures, expansion forces the pin bosses away from each other, thus causing the piston to assume a more nearly round shape. It is important that old or new pistons be measured for taper and elliptical shape before they are fitted into the cylinder bore (See Fig. 40).

Finished Pistons

All pistons are machined to the same weight in grams, regardless of oversize so piston balance can be maintained. For cylinder bores which have been honed or rebored, pistons are available in standard and the following oversizes: .005, .020, and .040 inch.

Fitting Pistons

Piston and cylinder wall must be clean and dry. Specified clearance between the piston and the cylinder wall is .0003 to .0013 inch.

Piston diameter should be measured at the top of skirt 90 degrees to piston pin axis. Cylinder bores should be measured halfway down the cylinder bore

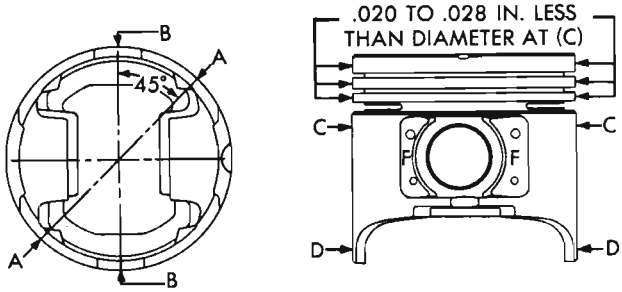

Fig. 40—Piston Measurements

and transverse to the engine crankshaft center line.

Pistons and cylinder bores should be measured at normal room temperature, 70 degrees F.

All service pistons include pins, and are available in standard and the following oversizes: .005, .020 and .040 inch.

Fitting Rings

(1) Measure piston ring gap about two inches from bottom of cylinder bore in which it is to be fitted. (An inverted piston can be used to push rings down to insure positioning rings squarely in cylinder bore before measuring.)

(2) Insert feeler stock in the gap. Ring gap should be between .013 to .052 inch for the compression rings and .015 to .062 inch for the oil ring steel rails in standard size bores. Maximum gap on .005 inch O/S bores should be .060 inch for compression rings and .070 inch for the oil ring steel rails.

(3) Measure side clearance between piston ring and ring groove (Fig. 41). Clearance should be .0015 to .003 inches for the top compression ring and intermediate ring. Steel rail service oil ring should be free in groove, but should not exceed .005 inch side clearance.

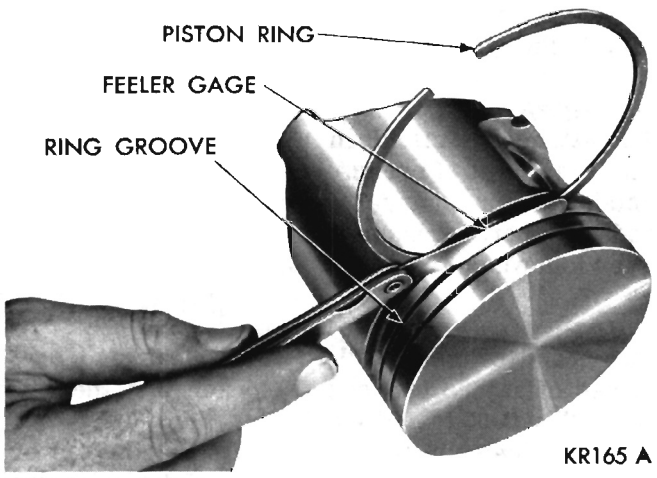

Fig. 41—Measuring Piston Ring Clearance

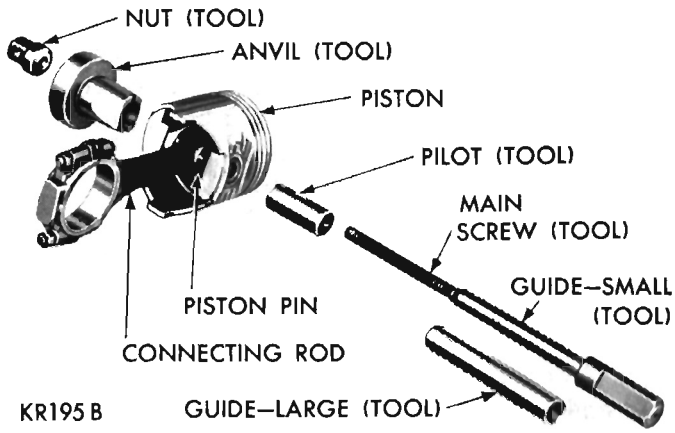

Fig. 42—Tool Arrangement for Removing Piston Pin

(4) Install the three piece oil ring in lower ring groove using instructions in ring package.

(5) Install compression rings in middle and top groove as shown in instruction sheet. Be sure the mark "top" on each compression ring faces top of piston.

(6) For the two top rings use ring installer Tool C-3673 for 383 cubic inch engines and Tool C-4001 for the 440 cubic inch engines.

Piston Pin Removal

(1) Arrange Tool C-3684 parts for removal of piston pin, (Fig. 42).

(2) Install pilot on main screw.

(3) Install main screw through piston pin.

(4) Install anvil over threaded end of main screw with small end of anvil against piston boss. **Be sure spring is removed from anvil.**

(5) Install nut loosely on main screw and place assembly on a press, (Fig. 43).

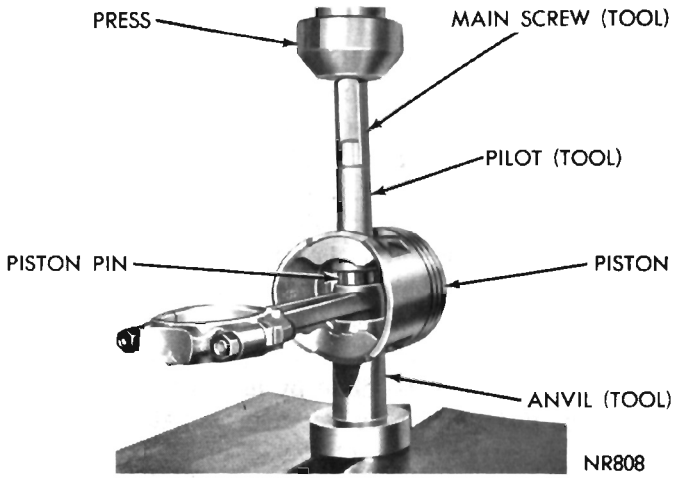

Fig. 43—Removing Piston Pin

(6) Press piston pin out of connecting rod.

When pin falls free from connecting rod, stop press to prevent damage to bottom of anvil.

(7) Remove tool from piston.

Installation

(1) Test piston pin fit in the piston. It should be a sliding fit in the piston at 70 degrees F. Piston pins are supplied in standard sizes only.

(2) Lubricate piston pin holes in the piston and connecting rod.

(3) Arrange Tool C-3684 parts for installation of piston pin (Fig. 44).

(4) Install spring inside the pilot and install spring and pilot in the anvil. Install piston pin over main screw.

(5) Place piston, with "front" up, over the pilot so pilot extends through piston pin hole.

(6) Position connecting rod over the pilot which extends through piston pin hole.

Assemble rods to pistons of the right cylinder bank (2, 4, 6, and 8) with indent on piston head opposite to the larger chamfer on the large bore end of connecting rod. Assemble rods to pistons of the left cylinder bank (1, 3, 5, and 7) with indent on piston head on the same side as the large chamfer on the large bore end of the connecting rod.

(7) Install main screw and piston pin in piston, (Fig. 44).

(8) Install nut on puller screw to hold assembly together. Place assembly on a press (Fig. 45).

(9) Press piston pin in until piston pin "bottoms" on the pilot. This will position pin in connecting rod.

(10) Remove tool and arrange tool parts and piston assembly in same manner (Fig. 42).

(11) Place assembly in a vise (Fig. 46).

(12) Attach torque wrench to nut and tighten up to 15 foot-pounds. If the connecting rod moves downward on piston pin, reject this connecting rod and piston pin combination. Obtain a connecting rod with proper small end bore diameter and repeat the installation and tightening procedure.

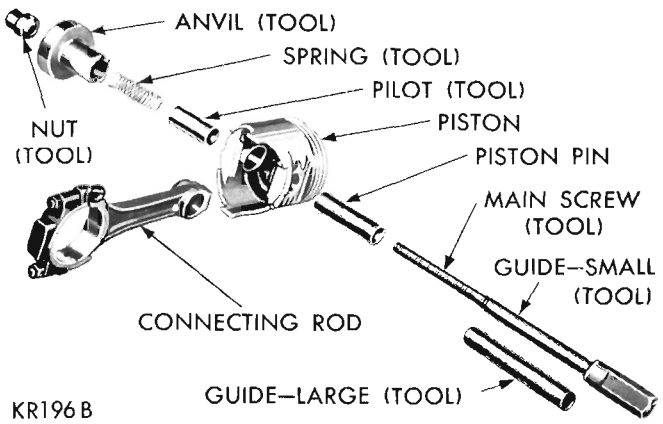

Fig. 44—Tool Arrangement for Installing Piston Pin

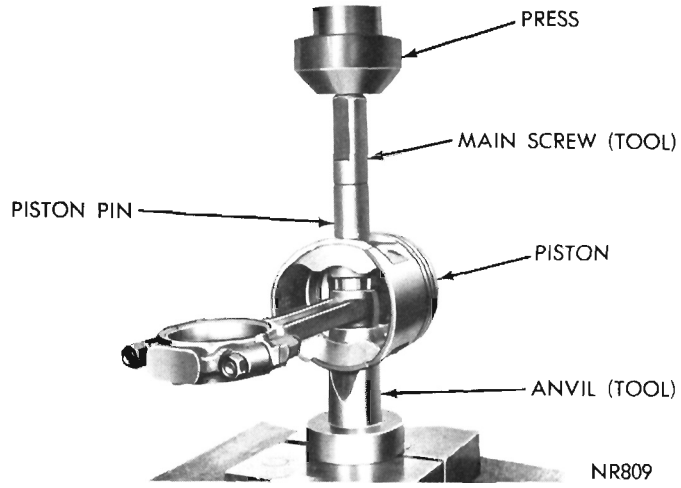

Fig. 45—Installing Piston Pin

(13) If connecting rod does not move under 15 foot-pounds, piston pin and connecting rod interference is satisfactory, remove tool.

CRANKSHAFT IDENTIFICATION

IMPORTANT: A Maltese Cross stamped on the engine numbering pad (Fig. 47) indicates that engine is equipped with a crankshaft which has one or more connecting rods and/or main bearing journal finished .001 inch undersize. The position of the undersize journal or journals is stamped on a machine surface of the NO. 3 counterweight (Fig. 48). A Maltese Cross with an X indicates .010 inch undersize journals.

The connecting rod journals are identified by the letter "R" and main bearing journals by the letter "M." For example "M-1" indicates that NO. 1 main bearing is .001 inch undersize.

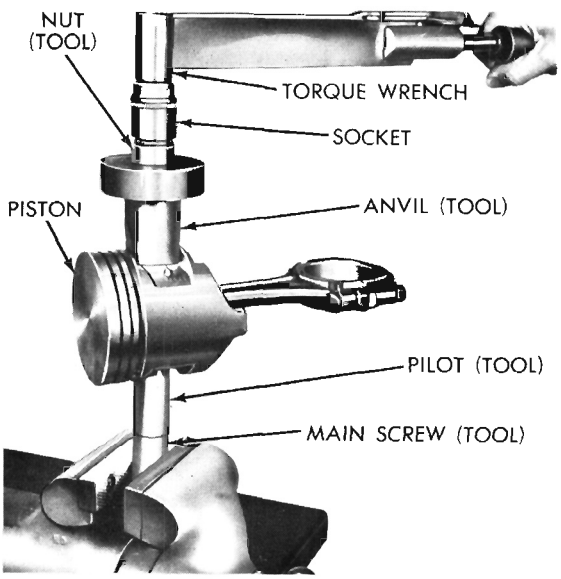

Fig. 46—Testing Fit of Piston Pin in Connecting Rod

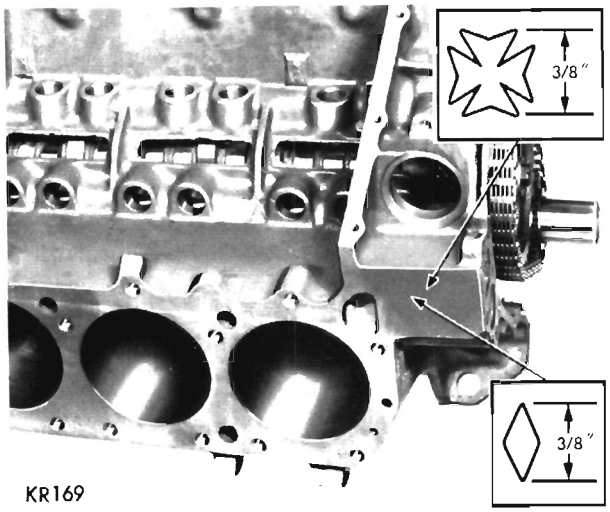

Fig. 47—Showing Location of External Engine Numbering Pad

CONNECTING RODS

Installation of Connecting Rod Bearings

Fit all rods on one bank until complete. Do not alternate from one bank to another, because when rods are assembled to the pistons correctly, they are not interchangeable from one bank to another.

Each bearing cap has a small "V" groove across parting face. When installing the lower bearing shell, make certain "V" groove in shell is in line with "V" groove in cap. This allows lubrication of the cylinder wall. The bearings should always be installed so that the small formed tang fits into the machined grooves of the rods. The end clearance should be from .009 to .017 inch (two rods).

Limits of taper or out-of-round on any crankshaft journals should be held to a maximum of .001 inch Bearings are available in .001, .002, .003, .010 and .012 inch undersize.

Install the bearings in pairs. Do not use a new bearing half with an old bearing half. Do not file the rods or bearing caps.

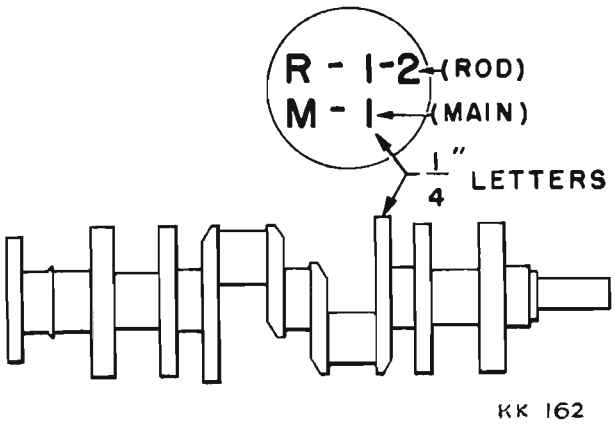

Fig. 48—Showing Location of Internal Marking of Counterweight

MEASURING CONNECTING ROD BEARING CLEARANCE

Shim Stock Method

(1) (a) 383 engine with 2-barrel carburetor, place an oiled .001 inch brass shim stock (1/2 inch wide and 3/4 inch long) between the bearing and connecting rod journal.

(b) 383 engine with 4-barrel carburetor and 440 with tri-metal bearings, use an oiled .002 inch brass shim stock (1/2 inch wide and 3/4 inch long) between the bearing and connecting rod journal.

(2) Install bearing cap and tighten to 45 foot-pounds.

(3) Turn crankshaft 1/4 turn in each direction. A slight drag should be felt which indicates clearance is satisfactory. 383 engine with 2-barrel carburetor, correct clearance is from .0005 to .0015 inch; 383 with 4-barrel carburetor and 440 with tri-metal bearings correct clearance is from .001 to .002 inch.

(4) Side play should be from .009 to .017 inch (two rods).

INSTALLING PISTON AND CONNECTING ROD ASSEMBLY

(1) Before installing pistons, rods, and rod assemblies in the bore, be sure that the compression ring gaps are staggered so that neither are in line with oil ring rail gaps.

(2) The oil ring expander ends should be positioned toward the outside of the "V" of the engine. The oil ring rail gaps should be positioned opposite each other and above the piston pin holes.

(3) Immerse piston head and rings in clean engine oil, slide ring compressor, Tool C-385, over the piston and tighten with special wrench (part of Tool C-385). **Be sure position of rings does not change during this operation.**

(4) Install connecting rod bolt protectors on rod bolts, the long protector should be installed on the numbered side of the connecting rod.

(5) Rotate crankshaft so that the connecting rod journal is on the center of the cylinder bore. Insert rod and piston into cylinder bore and guide rod over the crankshaft journal (Fig. 49).

(6) Tap piston down in cylinder bore, using handle of a hammer. At the same time, guide connecting rod into position on crankpin journal.

(7) The notch or groove on top of piston must be pointing toward front of engine and larger chamfer of connecting rod bore must be installed toward crank pin journal fillet.

(8) Install rod caps, tighten nuts to 45 foot-pounds.

CRANKSHAFT MAIN JOURNALS

Crankshaft main bearing journals should be in-

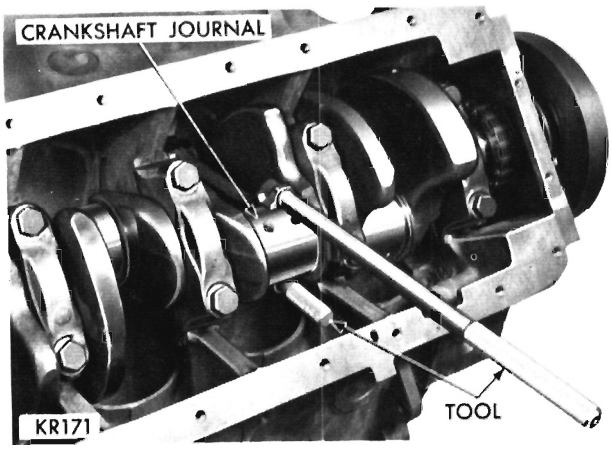

Fig. 49—Installing Connecting Rod

spected for excessive wear, taper and scoring. Journal grinding should not exceed .012 inch under the standard journal diameter. DO NOT grind the thrust faces of the NO. 3 main bearing. Do not nick crankpin or main bearing fillets. After regrinding, remove rough edges from crankshaft oil holes and clean out all oil passages.

CRANKSHAFT MAIN BEARINGS

New lower main bearing halves Numbers 1, 2, 4, 5 are interchangeable (Fig. 50). New upper main bearing halves Number 2, 4 and 5 are also interchangeable. Upper and lower bearing halves are not interchangeable because upper bearing is grooved and lower bearing is not.

The NO. 1 upper main bearing IS NOT INTERCHANGEABLE AND IS CHAMFERED on the tab side for timing chain oiling and can be identified by a red marking on edge of bearing.

Upper and lower NO. 3 bearings are flanged to carry the crankshaft thrust loads and are **not interchangeable** with any other bearings in the engine.

Bearings that are not badly worn or pitted must be reinstalled in the same position.

Bearing caps are not interchangeable and should be marked at removal to insure correct assembly. Bearings are available in standard and the following undersizes: .001, .002, .003, .010, .011 and .012 inch. Do not install an undersize bearing that will reduce clearance below specifications.

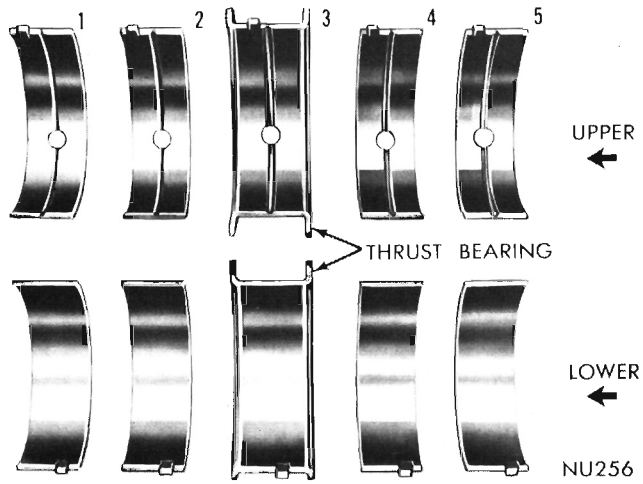

Fig. 50—Main Bearing Identification

Removal

(1) Remove oil pan and identify bearing caps before removal.

(2) Remove bearing caps one at a time. Remove upper half of bearing by inserting Tool C-3059 (Fig. 51) into oil hole of crankshaft.

(3) Slowly rotate crankshaft clockwise, forcing out upper half of bearing.

Installation

Only one main bearing should be selectively fitted while all other main bearing caps are properly torqued.

When installing a new upper bearing shell, slightly chamfer the sharp edges from the plain side.

(1) Start bearing in place, and insert Tool C-3059 into oil hole of crankshaft (Fig. 51).

(2) Slowly rotate crankshaft counter-clockwise sliding the bearing into position. Remove Tool C-3059.

MEASURING MAIN BEARING CLEARANCE

Shim Stock Method

(1) Smooth edges of a 1/2 x 3/4 inch piece of brass shim stock, .001 inch thickness.

(2) Install bearing in center main bearing cap, **bearing tang in groove in cap,** lubricate bearing and position shim stock across the bearing, install cap, tighten bolts to 85 foot-pounds.

(3) If a slight drag is felt as crankshaft is turned (moved no more than 1/4 turn in either direction),

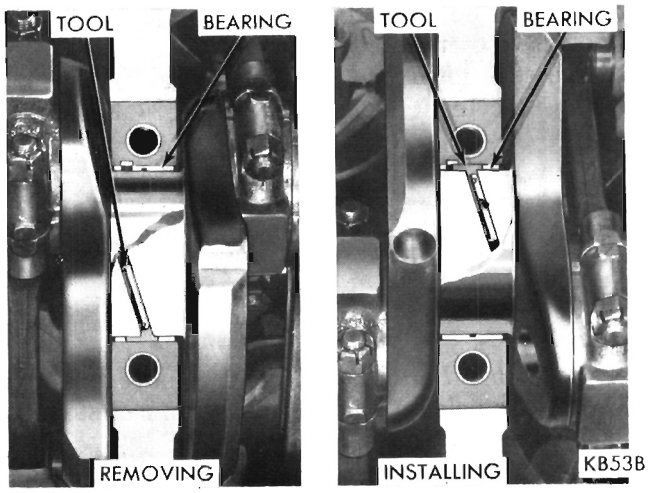

Fig. 51—Removing or Installing Upper Main Bearing

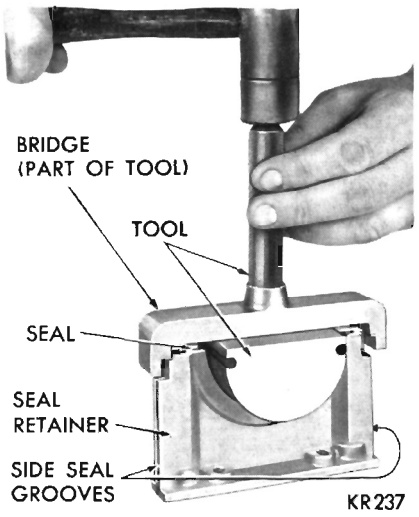

Fig. 52—Installing Rear Main Bearing Lower Oil Seal

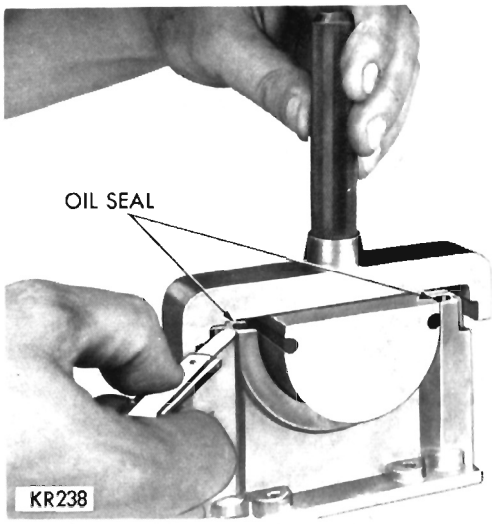

Fig. 53—Trimming Rear Main Bearing Lower Oil Seal

clearance is .001 inch or less and is considered satisfactory.

If, however, no drag is felt, the bearing is too large or crankshaft cannot be rotated, bearing is too small and should be replaced with the correct size.

(4) Measure crankshaft end play .002 to .007 inch. If end play is less than .002 inch or more than .007 inch, install a new number 3 main bearing.

(5) Fit remaining bearings in same manner.

It is permissable to use one .001 inch undersize bearing shell with one standard bearing shell or one .002 inch undersize bearing shell with one .001 inch undersize shell. **Always use the smaller diameter bearing half as the upper. Never use an upper bearing half more than .001 inch smaller than the lower bearing half and never use a new bearing half with a used bearing half.**

REAR MAIN BEARING OIL SEAL (Crankshaft Removed)

Upper Rear Main Seal Installation

(1) Install a new rear main bearing oil seal in cylinder block so that both ends protrude.

(2) Tap seal down into position, using Tool C-3625 for 383 Cubic Inch Engines or Tool C-3743 for 440 Cubic Inch Engines, with bridge removed until tool is seated in bearing bore.

(3) Hold the tool in this position and cut off portion of seal that extends above the block on both sides.

Lower Rear Main Seal Installation

(1) Install a new seal in seal retainer so ends protrude (Fig. 52).

(2) Install bridge on tool and tap the seal down into position with Tool C-3625 for 383 Cubic Inch Engines or Tool C-3743 for 440 Cubic Inch Engines until tool is seated.

(3) Trim off that portion of the seal that protrudes above the cap (Fig. 53).

Side Seals Installation

Perform the following operations as rapidly as possible. These side seals are made from a material that expands quickly when oiled.

(1) Apply mineral spirits or diesel fuel to the side seals.

(2) Install seals immediately in the seal retainer grooves.

(3) Install seal retainer and tighten screws to 30 foot-pounds.

Failure to pre-oil the seals will result in an oil leak.

ENGINE OILING SYSTEM (Fig. 54)

OIL PAN

Removal

(1) Disconnect battery cable and remove dipstick.

(2) Raise vehicle on a hoist and disconnect steering linkage from idler arm and steering arm.

(3) Disconnect exhaust pipe branches from right and left manifolds.

(4) Remove clamp attaching exhaust pipe to extension and remove exhaust pipe.

(5) Drain crankcase oil.

(6) Remove converter dust shield.

(7) Remove oil pan bolts. Turn flywheel until counterweight and connecting rods at front end of crankshaft are at their highest position to provide clearance, and lower the pan. Turn pan counter-

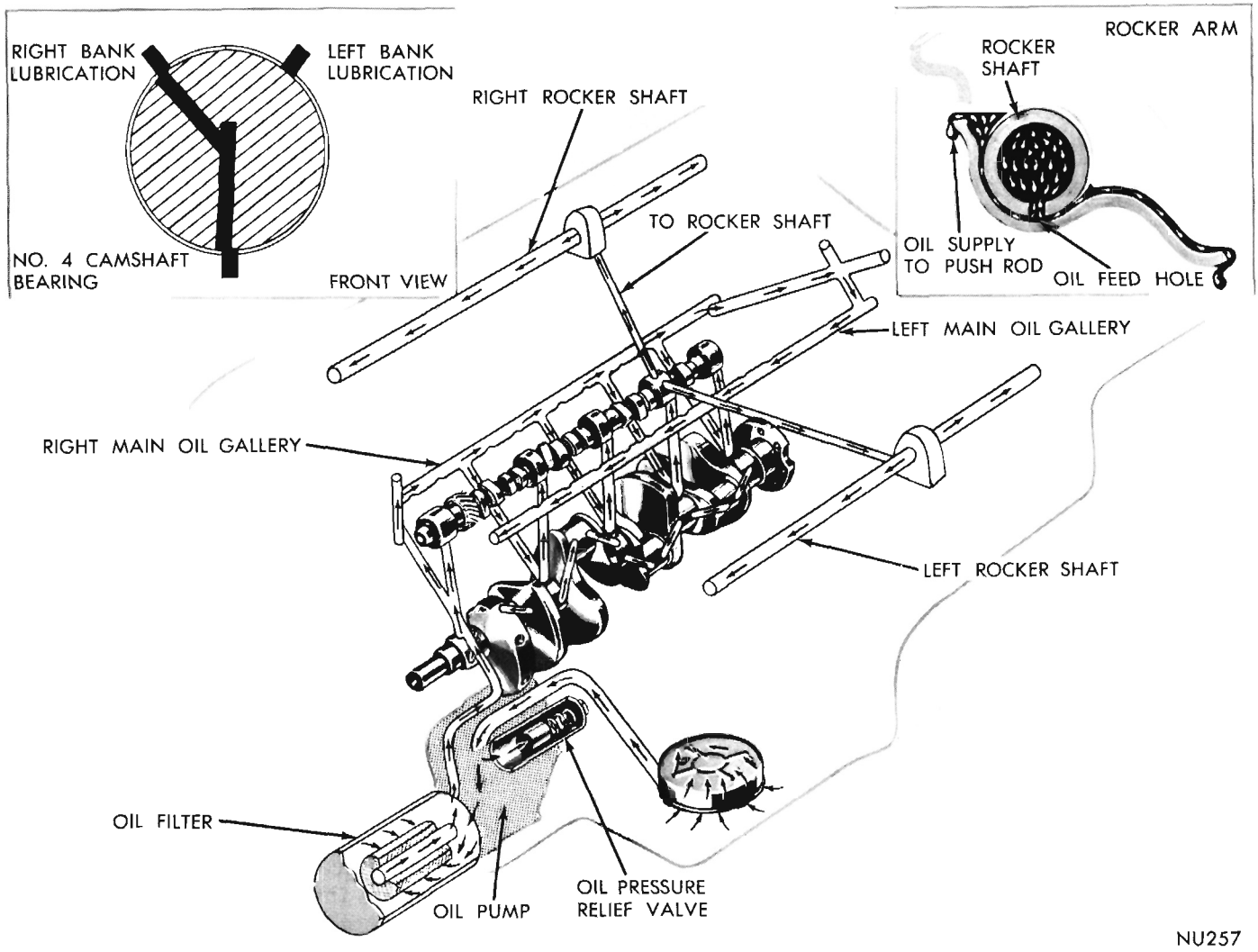

Fig. 54—Engine Oiling System

clockwise to clear oil screen and suction pipe as it is lowered.

Installation

(1) Inspect alignment of oil strainer. The bottom of the strainer must be on a horizontal plane with machined surface of cylinder block. The bottom of the strainer must touch the bottom of oil pan.

(2) Install oil pan.

(3) Install converter dust shield.

(4) Connect exhaust pipe branches to the manifolds and to the exhaust extension.

(5) Connect steering linkage at idler arm and at pitman arm.

(6) Connect battery cable, install dipstick.

(7) Install drain plug and refill crankcase with the proper grade and quantity of oil.

OIL PUMP

Removal

Remove oil pump attaching bolts and remove pump and filter assembly from bottom side of engine.

Disassembly

(1) Remove filter base and oil seal ring.

(2) Remove pump rotor and shaft and lift out outer pump rotor.

(3) Remove the oil pressure relief valve plug and lift out the spring and relief valve plunger (Fig. 55).

Inspection and Assembly

(1) Clean all parts thoroughly. The mating face of filter base (oil pump cover) should be smooth. Replace filter base if it is scratched or grooved.

(2) Lay a straightedge across oil pump filter base surface (Fig. 56). If a .0015 inch feeler gauge can be inserted between the base and straightedge, filter base should be replaced.

(3) If outer rotor length measures less than .943 inch (Fig. 57) and diameter less than 2.469 inches, replace outer rotor.

(4) If inner rotor length measures less than .942 inch (Fig. 58), a new inner rotor should be installed.

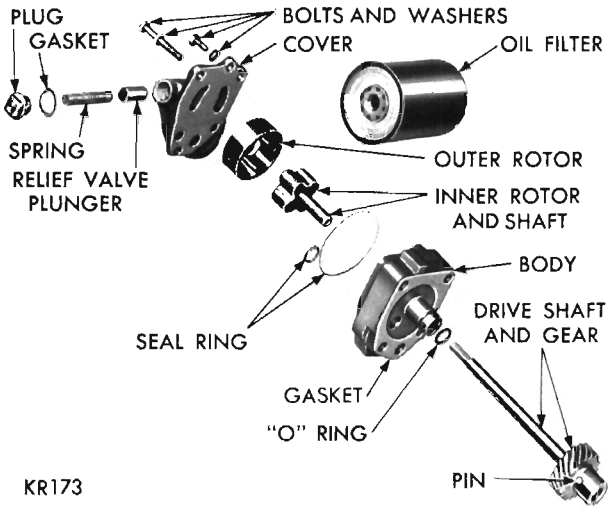

Fig. 55—Oil Pump and Filter Assembly (Disassembled View)

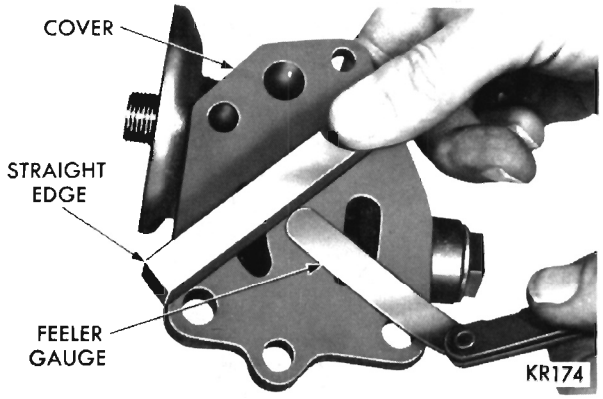

Fig. 56—Measuring Oil Pump Cover Flatness

(5) Install outer rotor into pump body, pressing to one side with fingers and measure clearance between outer rotor and pump body (Fig. 59). If measurement is more than .012 inch, replace oil pump body.

(6) Install inner rotor into pump body and place a straightedge across the face between bolt holes (Fig. 60). If a feeler gauge of more than .004 inch can be inserted between the rotors and straightedge, replace pump body.



Fig. 57—Measuring Outer Rotor Thickness



Fig. 58—Measuring Inner Rotor Thickness

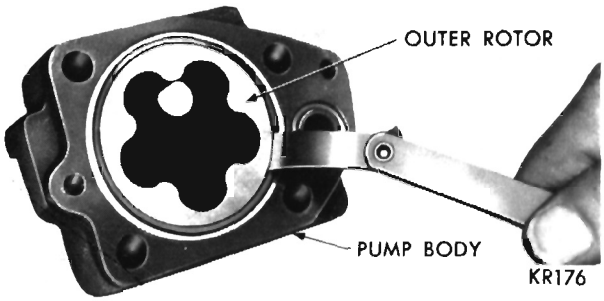

Fig. 59—Measuring Outer Rotor Clearance

(7) If the tip clearance between inner and outer rotor (Fig. 61) is more than .010 inch, replace inner and outer rotor.

Servicing Oil Pressure Relief Valve

Inspect oil pump relief valve plunger for scoring and free operation in its bore. Small scores may be removed with 400 grit wet or dry paper providing extreme care is used not to round off the sharp edge portion of the valve.

The relief valve spring has a free length of 2-9/32 to 2-19/64 inch and should test 14.85 to 15.85 lbs.

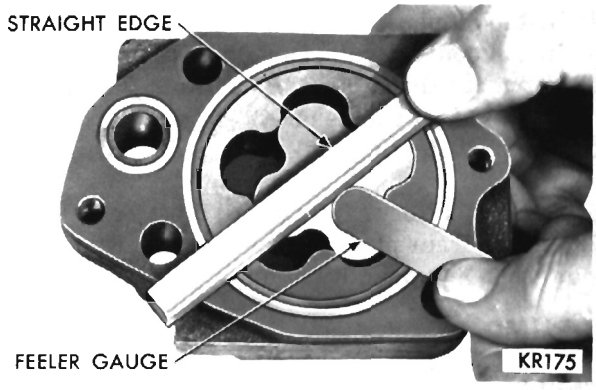

Fig. 60—Measuring Clearance Over Rotors

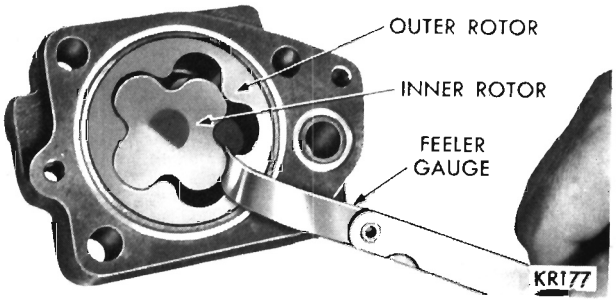

Fig. 61—Measuring Clearance Between Rotors

when compressed to 1-19/32 inch. Discard spring that fails to meet specifications.

If the oil pressure is low, inspect for worn bearings, or look for other causes of possible loss of oil pressure. **When assembling the oil pump, be sure to use new oil seal rings between filter base and pump body.**

Installation

(1) Install a new "O" ring seal on the pilot of oil pump before attaching oil pump to cylinder block.

(2) Install oil pump on engine, using a new gasket on engine and tighten attaching bolts to 35 foot-pounds. Install oil filter element.

OIL FILTER REPLACEMENT

The "spin on" oil filter should be replaced preferably to coincide with every second oil change.



Fig. 62—Removing Oil Filter

Removal

Use care so as not to damage transmission oil cooler lines.

(1) Using Tool C-3845 unscrew the filter from the base on bottom side of engine and discard (Fig. 62).

(2) Wipe base clean.

Installation

(1) Install the "spin" oil filter by hand, finger tight. Do not use tool.

(2) To obtain an effective seal, tighten filters by hand the additional number of turns indicated on the replacement filter. Start engine and inspect for leaks.

426 CUBIC INCH HEMI ENGINE

INDEX

	Page		Page
Camshaft	76	Measuring Connecting Rod Bearing Clearance	80
Camshaft Bearings	77	Measuring Main Bearing Clearance	81
Connecting Rods	80	Oil Filter	84
Crankcase Ventilation System	84	Oil Pan	82
Crankshaft Identification	80	Oil Pump	83
Crankshaft Main Bearings	81	Pistons, Pins and Rings	79
Crankshaft Main Journals	80	Repair of Damaged or Worn Threads	85
Cylinder Block	78	Rear Main Bearing Oil Seal	82
Cylinder Heads	69	Specifications	85
Distributor Drive Shaft Bushing	77	Tappet Adjustment	73
Engine Assembly	68	Timing Chain, Cover, Oil Seal and Chain	74
Engine Mounts	68	Tune-Up	67
Engine Oiling System	82	Valves and Valve Springs	71
Installing Piston and Connecting Rod Assembly	80	Valve Timing	73

SERVICE PROCEDURES

TUNE-UP

(1) Test battery specific gravity, add water if necessary, clean and tighten battery connections.

(2) Test cranking voltage. See "Starting Motor Cranking Voltage" Electrical Section of this manual.

(3) Tighten the intake manifold bolts to specifications.

(4) Perform cylinder compression test. Compression should not vary more than 30 pounds.

(5) Clean or replace spark plugs as necessary and adjust gap to .035 inch. Tighten to 30 foot-pounds. Aluminum spark plug tubes serve as spark plug gaskets.

(6) Test resistance of spark plug cables. Refer to "Ignition System Secondary Circuit Inspection" Electrical Section.

(7) Inspect the breaker plate contacts, primary wire and vacuum advance operation. Test coil output voltage, primary and secondary resistance. Test Condenser. Replace parts as necessary. Refer to Ignition System and make necessary adjustments.

(8) Reset the ignition timing with the vacuum advance line disconnected. The ignition timing should be set to compensate for altitudes and/or gasoline grades.

(9) Set carburetor idle mixture adjustment. Adjust engine RPM to specifications. Perform a combustion analysis.

(10) Test the fuel pump for pressure and vacuum. Refer to "Fuel System" Group 14, Specifications.

(11) Inspect the manifold heat control valve in the right exhaust manifold for proper operation and apply Manifold Heat Control Valve Solvent Number 2525054 or equivalent to the bushing and shafts.

(12) Every oil change, remove filter element and blow out dirt gently with air hose. Direct air from inside out, and keep nozzle 2 inches away from element to avoid damaging. Clean the metal housing and replace the element. Every year install a new factory recommended filter element. Service the unit more frequently when driving under severe conditions, such as in dusty areas.

(13) Inspect crankcase ventilation system as outlined on page 84.

(14) Inspect and adjust the accessory belt drives referring to "Cooling System" Group 7 for proper adjustments.

(15) Road test vehicle as a final check.

FRONT ENGINE MOUNTS

Removal

(1) Disconnect throttle linkage from bellcrank at rear of engine.

(2) Position fan to clear radiator top tank and hoses.

(3) Remove engine mount to frame bolts; on the right side disconnect flexible line and fitting from fuel pump and move line to side; on left side remove splash shield.

(4) Raise engine and remove engine mounts with brackets. Remove insulators from brackets.

Installation

(1) Install insulators to brackets loosely.

(2) Install engine mounts to engine, lower engine, into position and install engine mount to frame bolts. Tighten to specified torque (Fig. 1).

(3) On right side install fitting and flexible line to fuel pump; on left side install splash shield.

(4) Install throttle linkage to bellcrank.

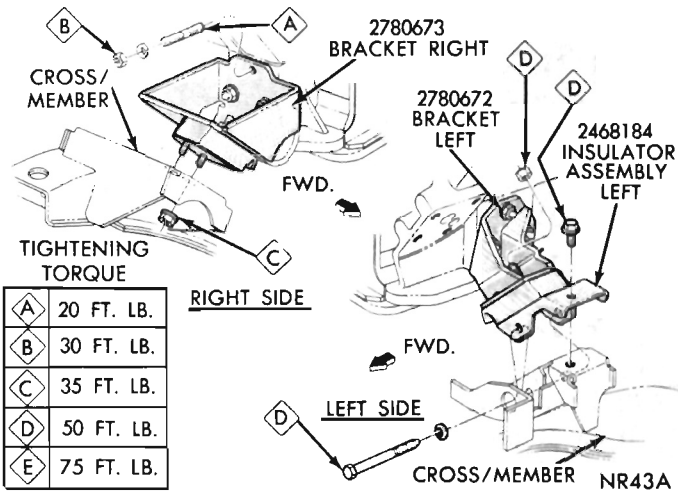

A	20 FT. LB.
B	30 FT. LB.
C	35 FT. LB.
D	50 FT. LB.
E	75 FT. LB.

Fig. 1—Front Engine Mounts

REAR ENGINE MOUNTS

Removal

(1) Raise vehicle on hoist.

(2) Install transmission jack to support rear of engine.

(3) Remove extension housing mounting bolts, crossmember attaching bolts and remove crossmember.

(4) Remove insulator from crossmember.

Installation

(1) Install insulator to crossmember.

(2) Install crossmember, tightening attaching bolts to specified torque.

(3) Install extension housing mounting bolts tightening to specified torque (Figs. 2 and 3).

(4) Remove transmission jack and lower vehicle.

ENGINE ASSEMBLY

Removal

(1) Scribe hood hinge outlines on hood and remove hood.

(2) Drain cooling system, remove battery and air cleaner.

(3) Disconnect radiator hoses, heater hoses and cooler lines if so equipped. Remove radiator and shroud.

(4) Disconnect fuel line, throttle cable, electrical connections to alternator, coil, temperature and oil pressure sending units.

(5) Raise vehicle on a hoist and remove transmission as outlined in Group 21 of this manual. Remove clutch torque shaft if so equipped.

(6) Remove attaching bolts and stud nuts from front engine mount insulators.

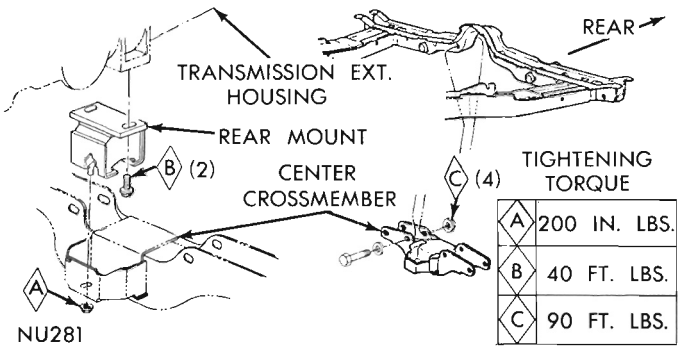

Fig. 2—Engine Rear Support (Except 4-Speed Transmission)

(7) Disconnect exhaust pipes from manifolds and tie out of the way. Lower vehicle.

(8) Install lifting straps to engine, attach front strap to front of left cylinder head and rear strap to rear of right cylinder head.

Caution: Do not use intake manifold to remove engine assembly.

Remove carburetors to prevent damage.

(9) Attach hydro-crane lifting hooks to lifting straps, remove engine assembly from chassis and install engine in a repair stand.

Installation

(1) Attach hydro-crane lifting hooks to lifting straps and remove engine from repair stand.

(2) Lower engine into chassis until the front engine mounts line up with "K" member support. Install attaching bolts and stud nuts, do not tighten at this time.

(3) Install engine support fixture C-3487, engaging the hooks in holes in frame side members. Be sure support ends are up against the underside of the oil pan flange.

(4) Remove hydro-crane lifting hooks. Raise vehicle on a hoist.

(5) Install transmission as outlined in Group 21 of this service manual.

(6) Install clutch torque shaft, linkage and adjust clutch pedal to 1 inch free play if so equipped.

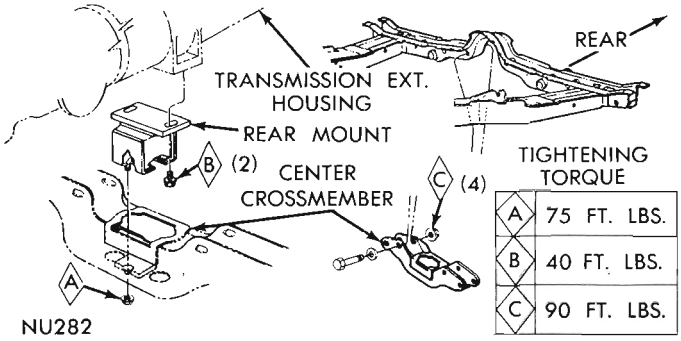

Fig. 3—Engine Rear Support (with 4-Speed Transmission)

(7) Install exhaust pipes to manifolds. Torque front engine mounts to specifications. Lower vehicle.

(8) Connect electrical connections to alternator, coil, temperature and oil pressure sending units, fuel line.

(9) Install carburetors, linkage, throttle cable and adjust.

(10) Install radiator, connect heater hoses, cooler lines and fill cooling system.

(11) Install hood using scribe marks for proper alignment.

(12) Install battery, fill crankcase to capacity.

Whenever an engine has been rebuilt and/or a new camshaft and/or tappets are installed, one quart of engine supplement, Chrysler Part Number 1879406 or equivalent should be added to the engine oil to aid in break-in. The oil mixture should be left in the engine for a minimum of 500 miles. Drain the oil mixture at the next normal oil change.

(13) Start engine, adjust engine idle and timing to specifications, install air cleaner and road test vehicle.

CYLINDER HEADS

Each chrome alloy cast iron cylinder head is held in place by 13 bolts (Fig. 4) and 4 studs, nuts and washers (Fig. 5). The stud nuts are tightened from inside of the tappet chamber. Aluminum spark plug tubes (shown in cross section in Figure 6) serve as spark plug gaskets. The tubes project through the cylinder head cover and are sealed against oil leaks.

Cylinder Head Cover Removal

(1) Drain cooling system and disconnect battery ground cable at battery.

(2) Remove air cleaner, distributor cap with spark plug cable and coil secondary cable as an assembly.

(3) Grasp secondary cables at spark plug covers and pull covers straight out.

(4) Remove spark plugs.

(5) On left bank, disconnect brake lines at master cylinder, remove cotter pin and clevis pin from linkage in back of power brake.

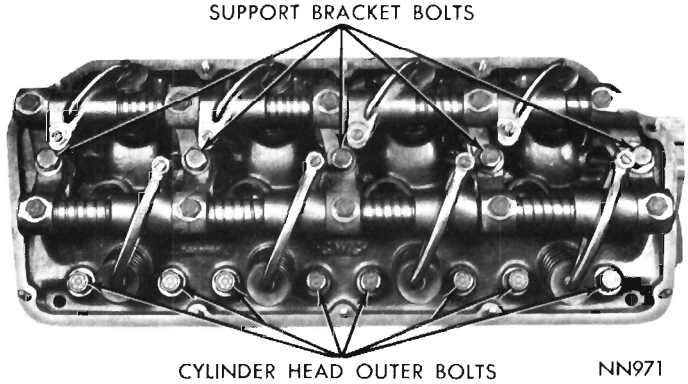

Fig. 4—Cylinder Head Attaching Bolts

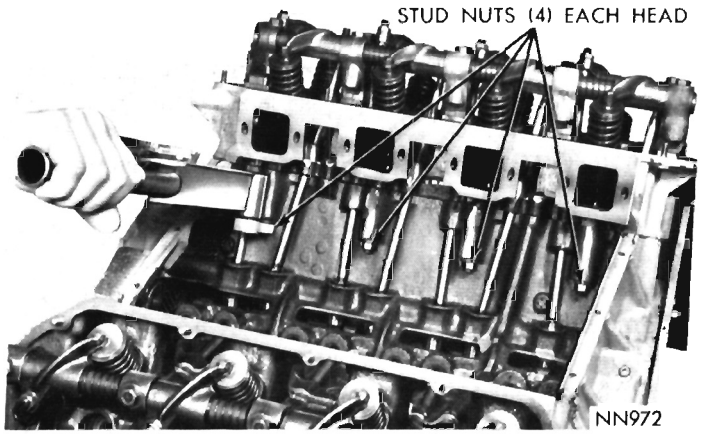

Fig. 5—Removing or Installing Cylinder Head Stud Nuts

(6) Remove the 4 nuts attaching booster to mounting bracket and remove power brake and master cylinder assembly.

(7) Remove cylinder head covers and gaskets.

Rocker Arms and Shafts Removal

(1) With cylinder head cover removed, remove the five bolts, (3/4 inch hexagon) that attach the rocker arm support brackets to the cylinder head and block (Fig. 4).

(2) Remove rocker arm assemblies.

(3) Remove push rods and **identify to insure installation in original location.**

Cylinder Head Removal

(1) With cylinder head cover and rocker arm assembly removed, remove alternator, disconnect accelerator cable and transmission throttle rod from upper bellcrank.

(2) Disconnect fuel line at tee fitting.

(3) Disconnect intake manifold heat tubes located at rear of manifold. Remove air tube between automatic choke and exhaust manifold.

(4) Remove the intake manifold attaching screws. (There are three locating dowels at each end of manifold.)

(5) Remove intake manifold with ignition coil, both carburetors, fuel lines, fuel filters, throttle linkage and upper bellcrank as an assembly.

(6) Disconnect exhaust headers from cylinder heads and tie out of way.

(7) Remove the lower **eight** cylinder head bolts (Fig. 4).

(8) Remove the **four** stud nuts, (9/16 inch hexagon) from cylinder head studs inside of tappet chamber (Fig. 5).

(9) Remove cylinder heads and place in holding fixture tool C-3626. **To protect studs do not set cylinder head down on studs at any time.**

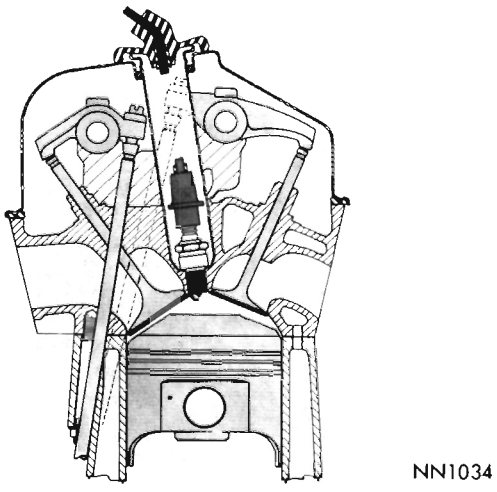

Fig. 6—Hemi-426 Engine Combustion Chamber Cross Section

Cylinder Head Installation

(1) Clean gasket surfaces of cylinder block, cylinder head and remove all burrs from edges of cylinder head.

(2) Inspect all surfaces with a straightedge if there is any reason to suspect leakage.

If the cylinder head studs were removed or come loose, the studs will have to be coated with Chrysler Sealer Part Number 1057794 or equivalent and torqued to 20 ft.-lbs.

(3) Coat new gasket lightly with Chrysler Sealer Part Number 1057794 or equivalent. With the raised bead toward cylinder block, install gasket and cylinder head.

(4) Install the cylinder head stud nuts inside of tappet chamber and the eight short outer cylinder head bolts. **Do not tighten at this time.**

Rocker Arms and Shaft Installation

(1) Install push rods through push rod holes in head. The short rods in upper holes (intake) and long rods in lower holes (exhaust).

If the rocker arm assembly had been disassembled for cleaning, inspection or replacement, refer to Fig-

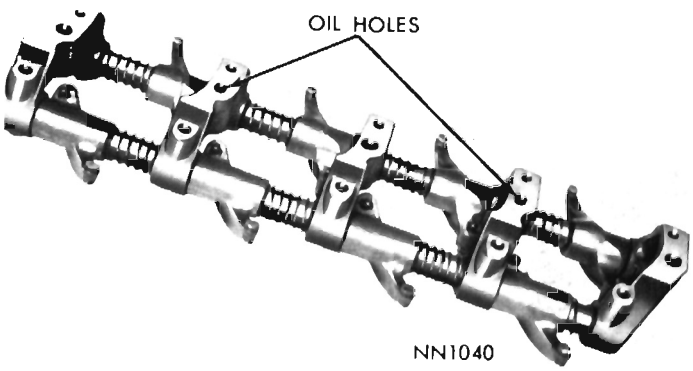

Fig. 7—Rocker Shafts Assembly (Bottom View)

ure 7 for proper reassembly noting oil holes in number two and four brackets.

(2) Position the rocker shaft support brackets on the cylinder head and install the **five long** cylinder head bolts into rocker shaft support brackets and cylinder head, lining up all push rods to their respective rocker arms.

(3) Starting at the center, tighten all head bolts and stud nuts to 50 foot-pounds in sequence shown in Figure 8 then repeat the procedure, tightening to 75 foot-pounds in the same sequence.

(4) Adjust tappets. See "Tappet Adjustment Procedure."

(5) Install exhaust headers with new gaskets and tighten to 35 foot-pounds.

(6) Place new cylinder head cover gaskets in position and install cylinder head covers. Tighten nuts to 40 inch-pounds.

(7) Adjust spark plug gaps to .035 inch. Slide spark plug tube seals over tubes. With a six inch extension on a spark plug socket insert spark plug, slide spark plug tube over assembly, insert assembly in cover and cylinder head, being careful not to drop plug as this would change gap setting. Tighten spark plugs to 30 foot-pounds.

(8) Install new intake manifold gaskets and intake manifold; make sure end gaskets are positioned over locating dowels marked "A" in Figure 9. Tighten screws marked "B" to 72 inch-pounds, and screws marked "C" to 48 inch-pounds. Repeat the tightening procedure in the sequence shown until all screws maintain their specified torque.

(9) Connect fuel line, automatic choke, intake manifold heat tubes, transmission throttle rod to upper bell crank, accelerator cable and adjust as necessary.

(10) Install crankcase ventilation hose, distributor cap with spark plug cables, and coil wire and cable.

(11) Install alternator, battery ground cable and heater hoses if removed.

(12) Connect power brake booster, if so equipped and bleed brakes.

(13) Fill the cooling system. Start engine and check for leaks.

(14) Adjust ignition timing and carburetors to specifications. Road test vehicle.

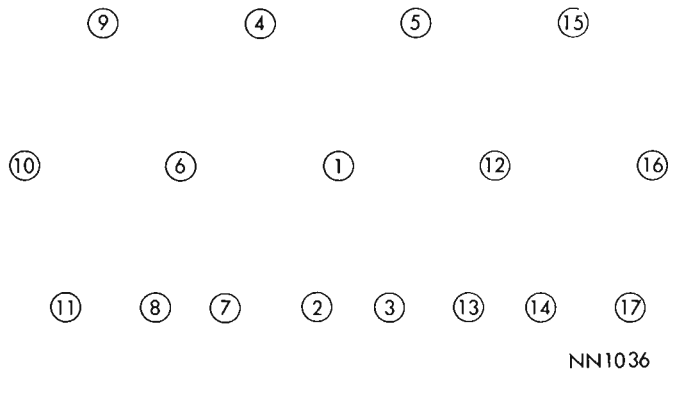

Fig. 8—Cylinder Head Tightening Sequence

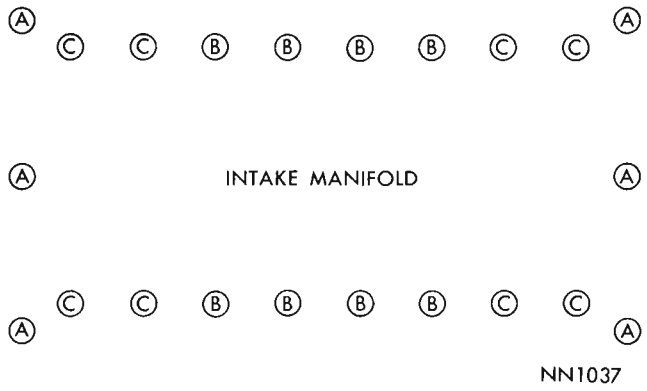

Fig. 9—Intake Manifold Tightening Sequence

VALVES AND VALVE SPRINGS

The valves are a lateral arrangement which provides the maximum amount of space and permits direct and unrestricted intake and exhaust porting. Valve guides are integral with the heads.

Removal

(1) With cylinder head removed, compress valve springs with Tool C-3422A (Fig. 10).

(2) Remove valve retaining locks, valve spring retainers, valve stem cup seals (intake valves only) and valve springs. **Remove any burrs from the valve stem lock grooves to prevent damage to the valve guide when valves are removed. Identify valves, to insure installation in original location.**

Valve Inspection

(1) Clean valves thoroughly and discard burned, warped or cracked valves.

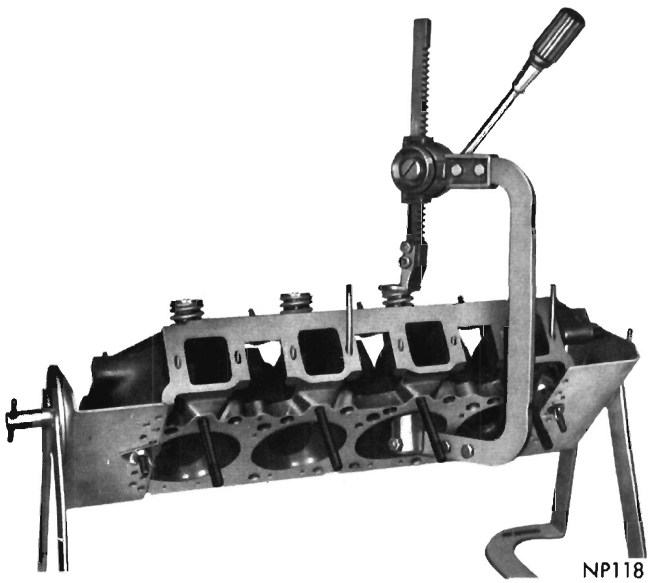

Fig. 10—Compressing Valve Spring

(2) Measure valve stems for wear. New intake valve stem diameter should measure .3085 to .3095 inch and exhaust valve stem diameter should measure .3075 to .3085 inch. If wear exceeds .002 inch, replace valve.

(3) Remove carbon and varnish deposits from inside of valve guides with a reliable valve guide cleaner.

(4) Measure valve stem guide clearance as follows:

(a) Install sleeve Tool C-3973 over valve stem (Fig. 11) and install valve. The special sleeve places the valve at the correct height for checking with a dial indicator.

(b) Attach dial indicator Tool C-3339 to cylinder head and set it at right angle to the valve stem being measured (Fig. 12).

(c) Move valve to and from the indicator. The total dial indicator should not exceed .017 inch. Ream guides for valves with oversize stems if dial indicator reading is excessive or if the valve stems are scuffed or scored.

(d) Service valves with oversize stems are available in .005, .015 and .030 inch oversize.

(e) Slowly turn reamer by hand and clean guide thoroughly before installing a new valve. **Do not attempt to ream the valve guides from standard directly to .030 inch. Use step procedure of .005, .015 and .030 inch so the valve guides may be reamed true in relation to the valve seat.**

Refacing Valves and Valve Seats

(1) The intake and exhaust valve seats and valve faces have a 45 degree angle.

(2) Inspect the remaining margin after the valves are refaced (Fig. 13). Valves with less than 3/64 inch margin should be discarded.

(3) When refacing valve seats, it is important that the correct size valve guide pilot be used for reseating stones. A true and complete surface must be obtained.

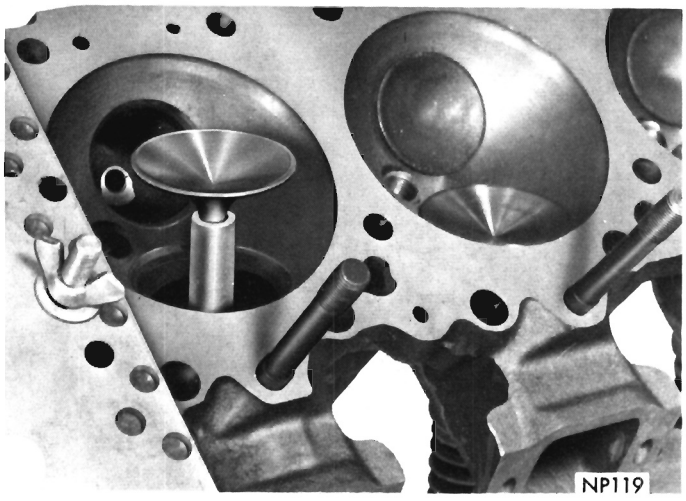

Fig. 11—Installing Valve and Tool C-3973

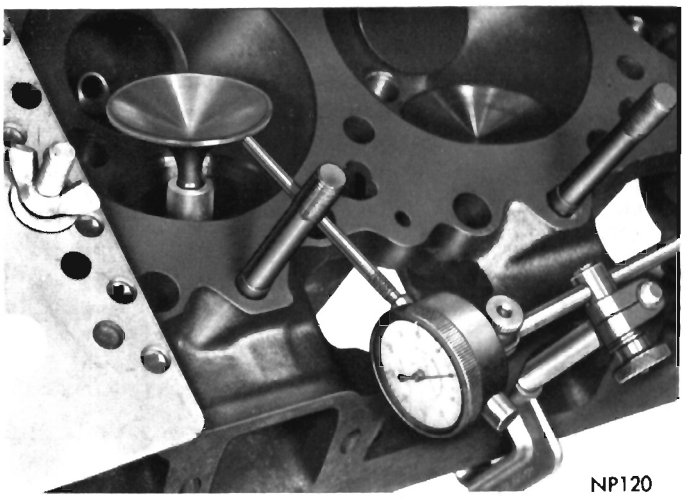

Fig. 12—Measuring Valve Guide Wear

(4) Measure the concentricity of valve seat using dial indicator No. 13725. Total runout should not exceed .002 inch (total indicator reading).

(5) Inspect valve seat with Prussian Blue to determine where the valve contacts the seat. To do this, coat valve seat **lightly** with Prussian Blue then set the valve in place. Rotate the valve with light pressure. If the blue is transferred to the center of the valve face, contact is satisfactory. If the blue is transferred to the top edge of valve face, lower the valve seat with a 30° stone. If the blue is transferred to the bottom edge of valve face, raise the valve seat with a 60° stone.

(6) When the seat is properly positioned, the width of intake seats should be 1/16 to 3/32 inch. The width of exhaust seats should be 3/64 to 1/16 inch.

Testing Valve Springs (Fig. 14)

(1) Whenever valves have been removed for inspection, reconditioning or replacement, valve springs should be tested. As an example, the compressed

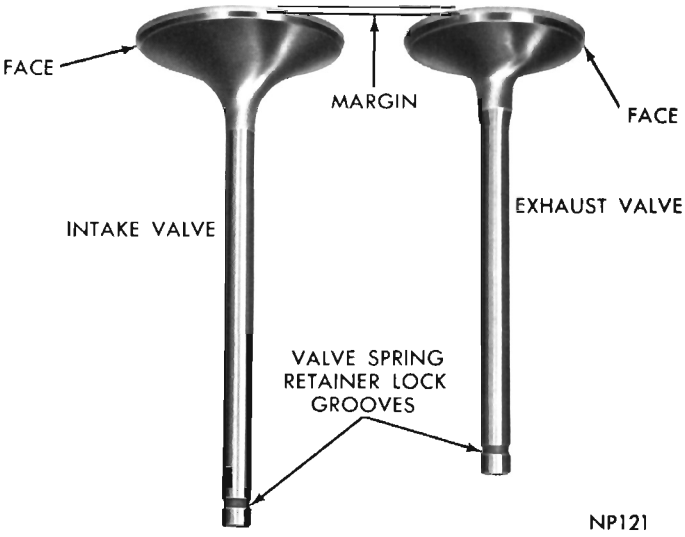

Fig. 13—Intake and Exhaust Valves

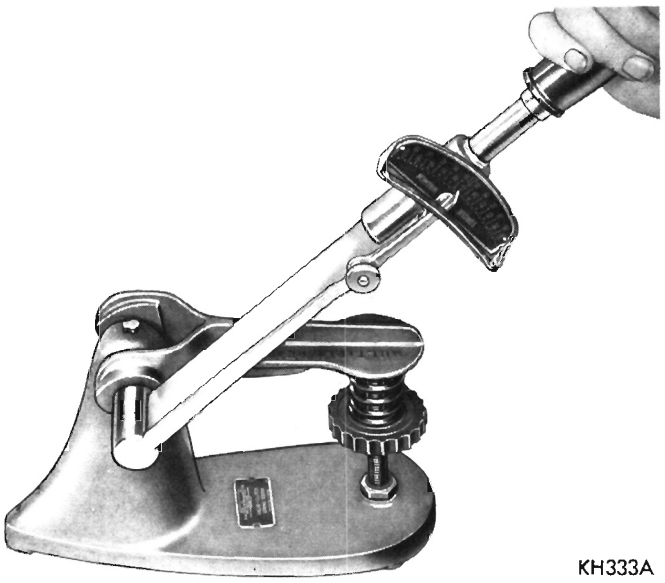

Fig. 14—Testing Valve Spring

length to be tested is 1-1/2 inches. Turn table of Tool C-647 until surface is in line with the 1-1/2 inch mark on the threaded stud and the zero mark to the front. Place spring over stud on the table and lift compressing lever to set tone device. Pull on torque wrench until ping is heard. Take reading on torque wrench at this instant. Multiply this reading by two. This will give the spring load at test length. Fractional measurements are indicated on the table for finer adjustments. The valve spring (with surge damper removed) should test 110 to 120 pounds when compressed to 1-55/64 inches (valve closed), and 270 to 290 at 1-3/8 inches (valve open). Discard springs that do not meet these specifications.

(2) Inspect each valve spring for squareness with a steel square and surface plate, test springs from both ends (Fig. 15). If the spring is more than 1/16 inch out of square, install a new spring.

Installation

(1) Coat valve stems with lubrication oil and insert them in cylinder head.

(2) Install new seals on intake valve stems and over valve guides. Install valve springs and retainers.

(3) Compress valve springs with Tool C-3422A, install locks and release tool. **If valves and/or seats are reground, measure the installed height of springs. Make sure measurement is taken from bottom of spring retainer** (if spacers are installed, measure from the top of spacer). **If height is greater than 1-59/64 inch, install a 1/16 inch spacer in head counterbore to bring spring height back to the normal 1-53/64 to 1-57/46 inches.**

TAPPET ADJUSTMENT

When adjusting tappets on the 426 cu. in. engine (cold setting) it is very important that the setting is made with each tappet at the lowest point of the cam on the base circle.

The procedure used on standard engines cannot be used because of the overlap and duration with the special camshaft.

The following procedure will assure proper position of the camshaft when making adjustment. An indicator light can be used in the ignition primary circuit to more clearly define the various positions of the crankshaft:

		Intake	Exhaust
A.	Adjust ignition timing to TDC, Chalk mark TDC and 180° opposite TDC on the front crankshaft damper.	(.028")	(.032")
B.	Set crankshaft so No. 1 cylinder is at TDC (Compression Stroke Points Opening) Adjust	2 and 7	4 and 8
C.	Rotate crankshaft 180° in normal running direction until points open for No. 4 cylinder. Adjust	1 and 8	3 and 6
D.	Rotate crankshaft an additional 180° until points open for No. 6 cylinder Adjust	3 and 4	5 and 7
E.	Rotate crankshaft an additional 180° until points open for No. 7 cylinder Adjust	5 and 6	1 and 2
F.	Reset ignition timing to operating specifications and install valve covers.		

VALVE TIMING

(1) Rotate crankshaft until the #6 exhaust valve is closing and the #6 intake valve is opening. Install a dial indicator so that indicator pointer contacts valve spring retainer on #1 intake valve parallel to the axis of the valve stem.

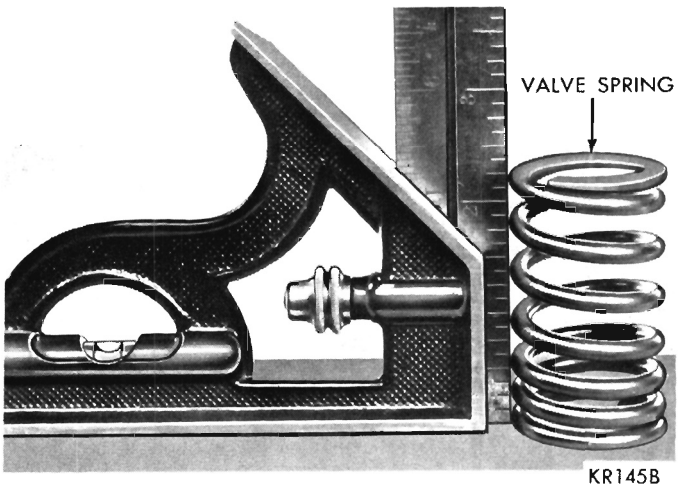

Fig. 15—Inspecting Valve Spring Squareness

(First valve on top rocker shaft on right bank as viewed from front of engine).

(2) Turn #1 intake adjusting screw in one complete turn to remove lash. Zero the indicator.

(3) Rotate crankshaft clockwise (normal running direction) until valve has lifted .109 inch.

CAUTION: Do not turn crankshaft any further clockwise, as the valve spring might bottom and result in serious damage.

The timing of the crankshaft pulley should now read from 10 degrees before top dead center to 2 degrees after top dead center. Readjust lash.

(4) If reading is not within specified limits:

(a) Check accuracy of DC mark on crankshaft pulley.

(b) Check sprocket index marks.

(c) Inspect timing chain for wear.

TIMING CHAIN COVER, OIL SEAL AND CHAIN

Cover Removal

(1) Drain cooling system and remove radiator, fan belt and water pump housing. Remove power steering pump and tie out of the way, if so equipped.

(2) Remove pulley from vibration damper, bolt and washer securing vibration damper on crankshaft.

(3) Install Tool C-3688, and pull damper assembly off end of crankshaft (Fig. 16).

(4) Remove the two front pan bolts.

(5) Remove chain case cover and gasket using extreme caution to avoid damaging oil pan gasket. **It is normal to find particles of neoprene collected between the crankshaft seal retainer and crankshaft oil slinger.**

(6) Slide crankshaft oil slinger from end of crankshaft.

Measuring Timing Chain for Stretch

(1) Place a scale next to the timing chain so any movement of the chain may be measured.

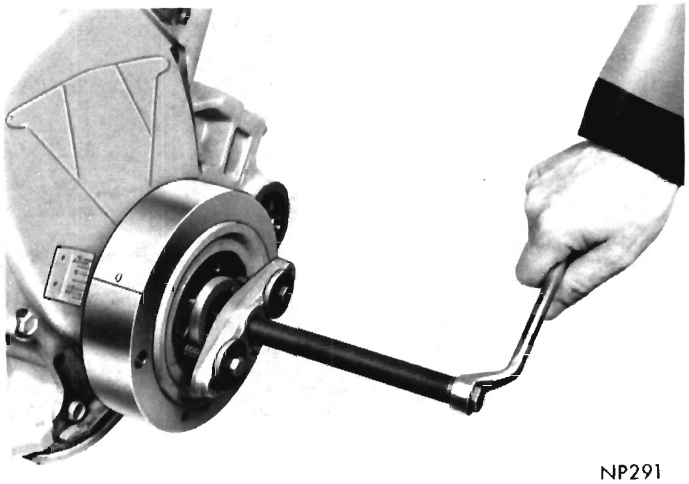

Fig. 16—Removing Vibration Damper Assembly

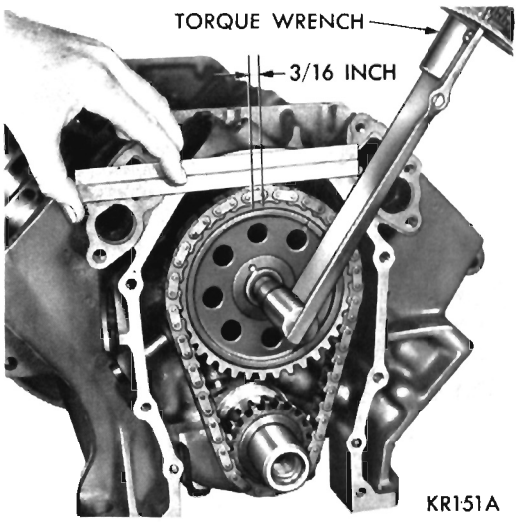

Fig. 17—Measuring Timing Chain Stretch (Typical)

(2) Place a torque wrench and socket over camshaft sprocket attaching bolt and apply torque in the direction of crankshaft rotation to take up slack; 30 foot-pounds (with cylinder heads installed) or 15 foot-pounds (cylinder heads removed).

With torque applied to the camshaft sprocket bolt, crankshaft should not be permitted to move. It may be necessary to block crankshaft to prevent rotation.

(3) Holding a scale with dimensional reading even with edge of a chain link, apply torque in the reverse direction 30 foot-pounds (with cylinder heads installed) or 15 foot-pounds (cylinder heads removed), and note amount of chain movement (Fig. 17).

(4) Install a new timing chain, if its movement exceeds 3/16 inch.

(5) If chain is satisfactory, slide crankshaft oil slinger over shaft and up against sprocket (flange away from sprocket).

(6) If chain is not satisfactory, remove camshaft sprocket attaching bolts and remove timing chain with crankshaft and camshaft sprockets.

When installing timing chain, use Tool C-3509 to prevent camshaft from contacting the welch plug in the rear of engine block. Remove distributor and oil pump-distributor drive gear. Locate tool against rear side of cam gear and attach tool with distributor retainer plate bolt (Fig. 18).

(7) Place camshaft sprocket and crankshaft sprocket on the bench with timing marks on exact imaginary center line through both camshaft and crankshaft sprocket bores.

(8) Place timing chain around both sprockets.

(9) Turn crankshaft and camshaft to line up with keyway location on crankshaft sprocket and dowel holes in camshaft sprocket.

(10) Lift sprockets and chain (keep sprockets tight

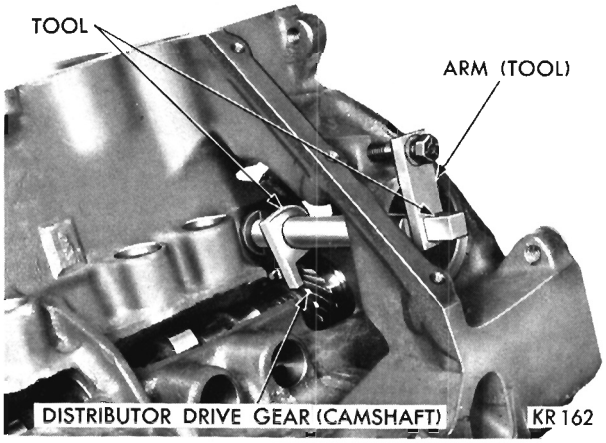

Fig. 18—Camshaft Holding Tool C-3509

against chain in position as described).

(11) Slide both sprockets evenly over their respective shafts.

(12) Use a straight edge to measure alignment of timing marks (Fig. 19).

(13) Install camshaft sprocket bolts and tighten to 40 foot-pounds. Slide the crankshaft oil slinger over shaft and up against sprocket (flange away from sprocket).

Oil Seal Replacement (Cover Removed)

(1) Position remover screw of Tool C-3506 through case cover, inside of case cover up. Position remover blocks directly opposite each other, and force the angular lip between the neoprene and flange of seal retainer.

(2) Place washer and nut on remover screw. Tighten nut, forcing the blocks into the gap to a point of distorting the seal retainer lip (Fig. 20). This is important, **remover is only positioned at this point.**

(3) Place sleeve over retainer and place removing

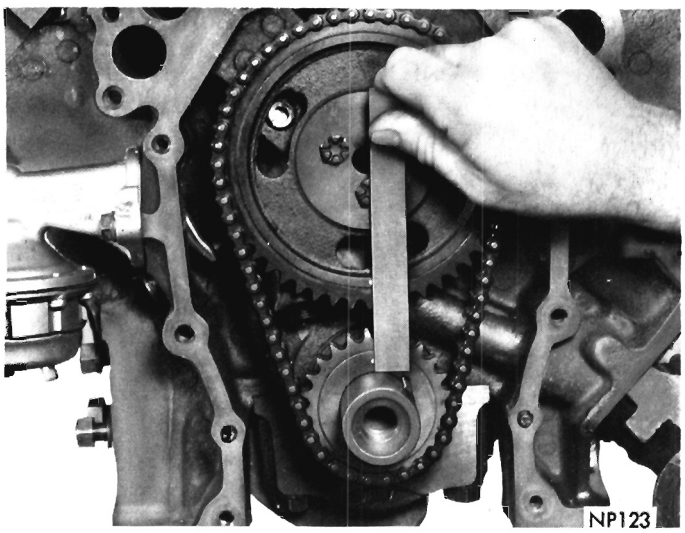

Fig. 19—Alignment of Timing Marks

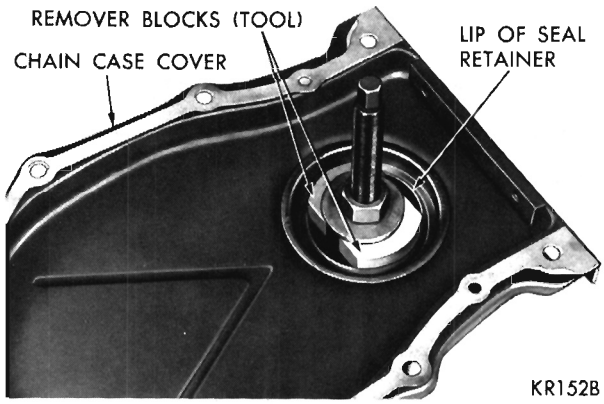

Fig. 20—Remover Blocks Expanded to Puller Position

and installing plate into the sleeve.

(4) Place flat washer and nut on the remover screw. Hold center screw and tighten remover nut to remove the seal (Fig. 21).

(5) Insert remover screw through the removing and installing plate so thin shoulder will be facing up.

(6) Insert remover screw with the plate through seal opening (inside of chain case cover facing up).

(7) Place seal in cover opening, with neoprene down. Place seal installing plate into the new seal, with protective recess toward lip of seal retainer (Fig. 22). **The lip of the neoprene seal must be toward source of oil.**

(8) Install flat washer and nut on remover screw, hold screw and tighten nut (Fig. 23).

(9) The seal is properly installed when the neoprene is tight against face of cover. Try to insert a .0015 inch feeler gauge between the neoprene and the cover (Fig. 24). If the seal is installed properly, feeler gauge cannot be inserted. **Do not over compress neoprene.**

Cover Installation

(1) Be sure mating surfaces of chain case cover and cylinder block are clean and free from burrs.

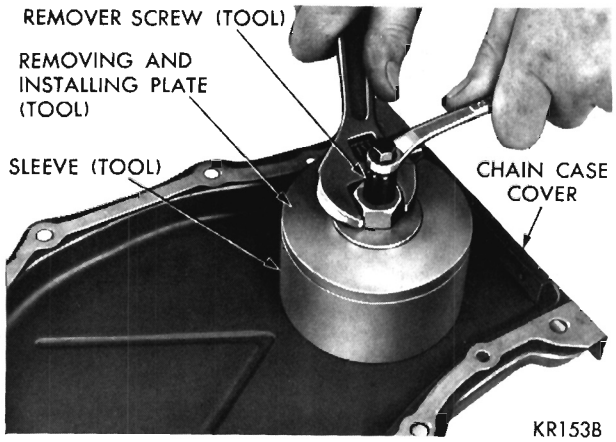

Fig. 21—Removing Oil Seal

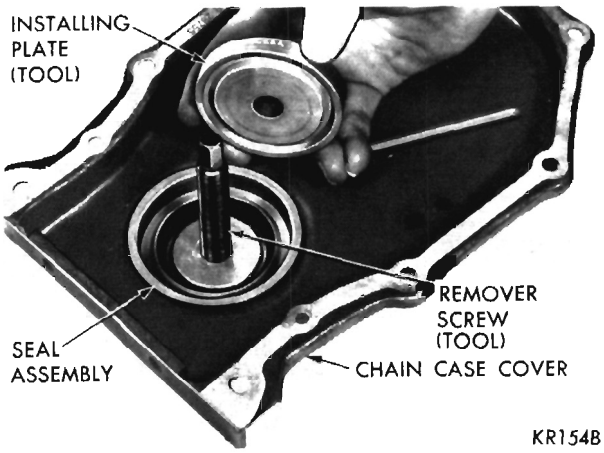

Fig. 22—Positioning Installer Plate

(2) Using a new gasket slide chain case cover over locating dowels. Install and tighten bolts 15 foot-pounds.

(3) Lubricate seal with lubriplate, place damper hub slot on key in crankshaft, and slide vibration damper on crankshaft.

(4) Place installing tool part of Tool C-3688 in position and press damper on the crankshaft (Fig. 25).

(5) Install damper retainer washer and bolt. Tighten to 135 foot-pounds.

(6) Slide belt pulley over shaft and attach with bolts and lockwashers. Tighten bolts to 200 inch-pounds.

CAMSHAFT

The camshaft has an integral oil pump and distributor drive gear and fuel pump eccentric.

The rearward camshaft thrust is taken by the rear face of the cast iron camshaft sprocket hub, bearing directly on the front of cylinder block, eliminating need for a thrust plate. The helix of the oil pump and distributor drive gear and camshaft lobe taper

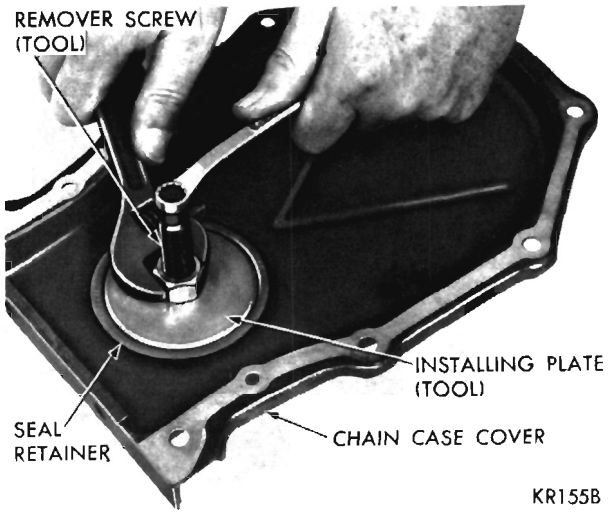

Fig. 23—Installing New Seal

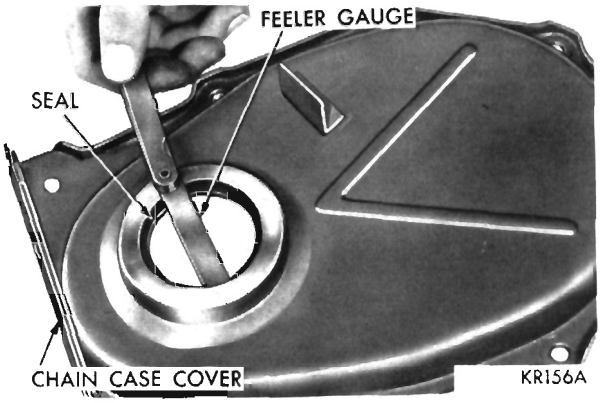

Fig. 24—Inspecting Seal for Proper Seating

both tend to provide a rearward thrust.

Removal

(1) With tappets and the timing chain and sprockets removed, remove distributor and lift out oil pump and distributor drive shaft.

(2) Remove fuel pump to allow fuel pump push rod to drop away from cam eccentric.

(3) Remove camshaft, being careful not to damage camshaft bearings with the cam lobes.

Installation

(1) Lubricate camshaft lobes and camshaft bearing journals and insert camshaft to within 2 inches of its final position in cylinder block.

(2) Modify Tool C-3509 by grinding off index lug holding the upper arm on the tool and rotate arm 180 degrees.

(3) Install Tool C-3509 in place of distributor drive gear and shaft, as shown in Figure 18.

(4) Hold tool in position with distributor lock plate screw. This tool will restrict camshaft from being pushed in too far and prevent knocking out the welch plug in the rear of cylinder block.

The tool should remain installed until camshaft and

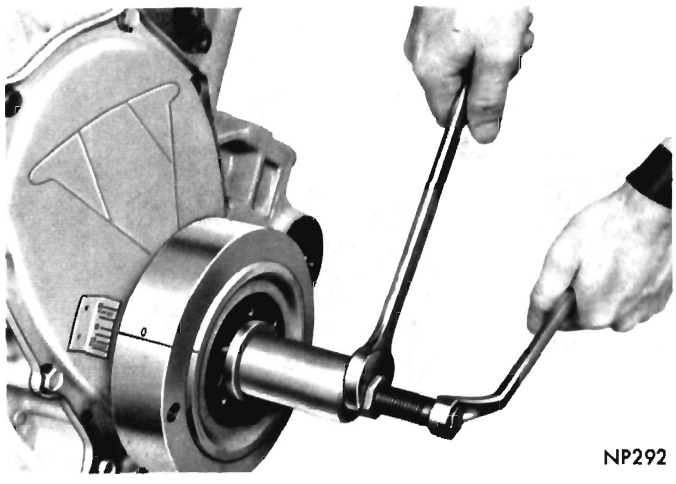

Fig. 25—Installing Vibration Damper Assembly

crankshaft sprockets and timing chain have been installed.

Whenever an engine has been rebuilt and/or a new camshaft and/or tappets are installed, one quart of engine supplement, Chrysler Part Number 1879406 or equivalent should be added to the engine oil to aid in break-in. The oil mixture should be left in the engine for a minimum of 500 miles. Drain the oil mixture at the next normal oil change.

Whenever camshaft is replaced, all of tappet faces must be inspected for crown with a straight edge. If any contact surface is dished or worn, tappet must be replaced.

CAMSHAFT BEARINGS (Engine Removed From Vehicle)

Removal

(1) With engine completely disassembled, drive out camshaft rear bearing welch plug.

(2) Install proper size adapters and horse shoe washers (part of Tool C-3132A) at the back of each bearing to be removed and drive out bearings (Fig. 26).

Installation

(1) Install new camshaft bearings with Tool C-3132A. Place new camshaft bearing over proper adapter.

(2) Position bearing in the tool. Install the horse shoe lock and by reversing removal procedure, carefully drive bearing into place (Fig. 26).

(3) Install remaining bearings in like manner.

Install the No. 1 camshaft bearing 1/32 inward from the front fact of cylinder block.

The oil holes in camshaft bearings and the cylinder block must be in exact register to insure proper lubrication.

The camshaft bearing index can be inspected after installation by inserting a pencil flashlight in the bearing. The camshaft bearing oil hole should be perfectly aligned with the drilled oil passage from the main bearing. Other oil holes in the camshaft bearings should be visible by looking down on the left bank oil hole above and between No. 6 and No. 8 cylinders to No. 4 camshaft bearing and on the right bank above and between No. 5 and 7 cylinders to No. 4 camshaft bearings. If camshaft bearing oil holes are not in exact register, remove and reinstall them correctly. Install a new welch plug at rear of camshaft. **Be sure this plug does not leak.**

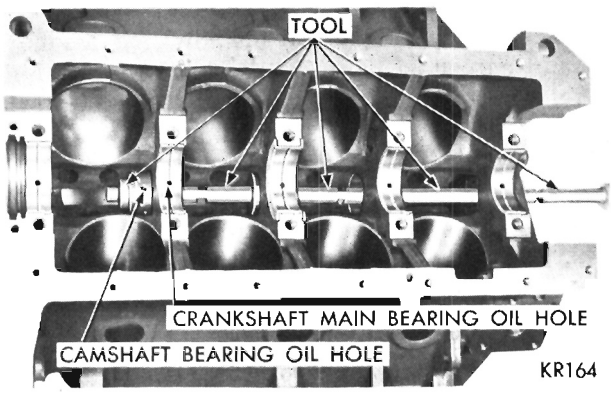

Fig. 26—Removing Camsraft Bearing Using Tool C-3132A

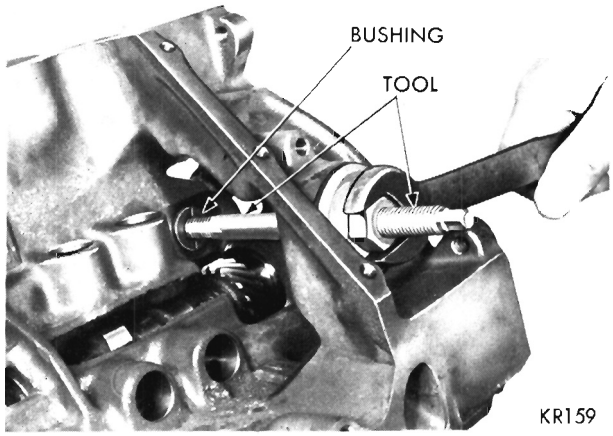

Fig. 27—Removing Distributor Drive Shaft Bushing

DISTRIBUTOR DRIVE SHAFT BUSHING

Removal

(1) Insert Tool C-3052 into the old bushing and thread down until tight fit is obtained (Fig. 27).

(2) Hold remover screw and tighten nut until bushing is removed.

Installation

(1) Slide a new bushing over burnishing end of Tool C-3053 and insert tool bushing into the bore.

(2) Drive bushing and tool into position, using a hammer (Fig. 28).

(3) As the burnisher is pulled through the bushing by tightening remover nut, the bushing is expanded

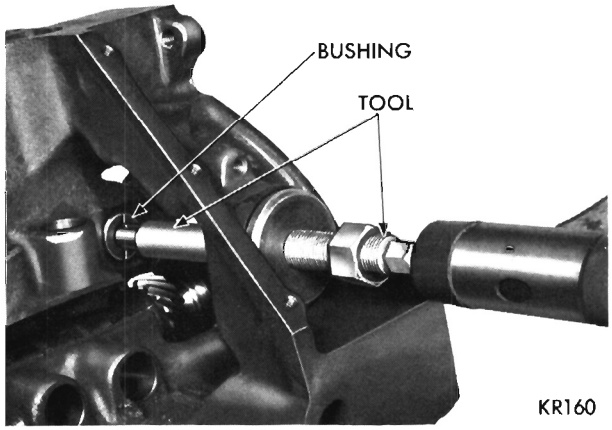

Fig. 28—Installing Distributor Drive Shaft Bushing

tight in the block and burnished to correct size (Fig. 29). **DO NOT REAM THIS BUSHING.**

Distributor Timing

Before installing distributor and oil pump drive shaft, time the engine as follows:

(1) Rotate crankshaft until No. 1 cylinder is at top dead center on the firing stroke.

(2) When in this position, the straight line on the vibration damper should be under "O" on timing indicator.

(3) Coat shaft and drive gear with engine oil. Install the shaft so that after gear spirals into place, it will index with the oil pump shaft, so slot in top of drive gear will be parallel with center line of crankshaft (Fig. 30).

Installation of Distributor

(1) Hold distributor over mounting pad on cylinder block with vacuum chamber pointing toward center of engine.

(2) Turn rotor until it points forward and to approximate location of No. 1 tower terminal in the distributor cap.

(3) Place distributor gasket in position.

(4) Lower the distributor and engage the shaft in the slot of distributor drive shaft gear.

(5) Turn distributor clockwise until breaker contacts are just separating, install and tighten hold down clamp.

CYLINDER BLOCK

The cylinder block is of the deep block design which eliminates the need for a torque converter housing adapter plate. The cylinder block reinforced in the vicinity of the main bearing web. Number 2, 3 and 4 main bearing caps receive added support from a pair of horizontal tie-bolts which anchor the bearing caps to the sides of the cylinder block. The sides extend three inches below the crankshaft center line.

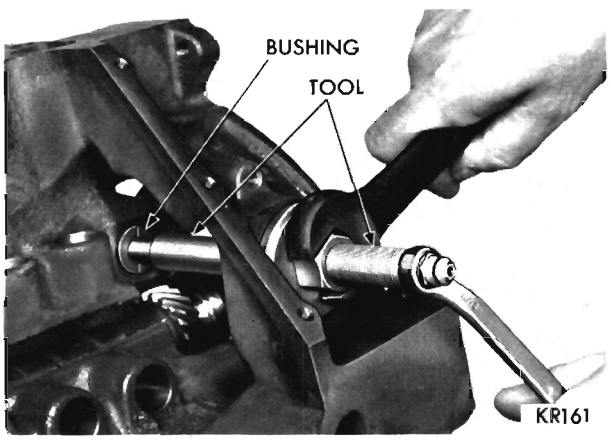

Fig. 29—Burnishing Distributor Drive Shaft Bushing

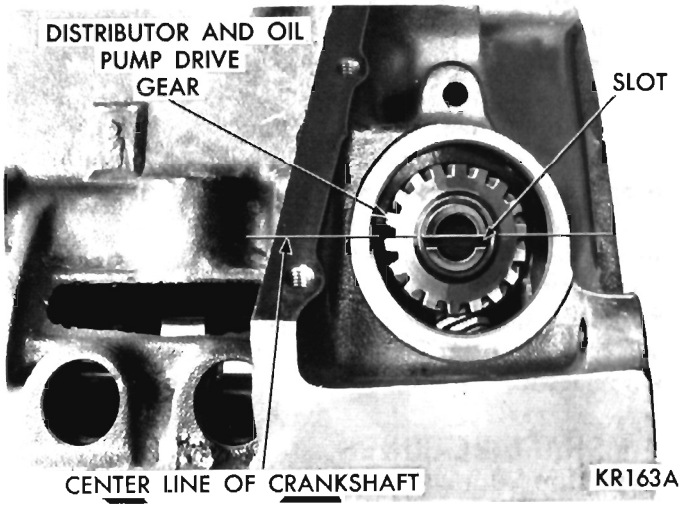

Fig. 30—Distributor Drive Gear Installed

Piston Removal

(1) Remove top ridge of cylinder bores with a reliable ridge reamer before removing pistons from cylinder block. **Be sure to keep tops of pistons covered during this operation.**

The pistons and connecting rods must be removed from the top of the cylinder block. When removing piston and connecting rod assemblies from the engine, rotate the crankshaft so each connecting rod is centered in cylinder bore.

(2) Inspect connecting rods and connecting rod caps for cylinder indentification. Identify them if necessary. Remove connecting rod cap.

(3) Install suitable connecting rod guides on rod bolts and push each piston and rod assembly out of cylinder bore. (Connecting rod guides to cover the complete threaded area can be made from copper or aluminum tubing and the inside threaded with a 7/16"-20 tap.)

(4) After removal, install the corresponding bearing cap on the rod.

Cleaning and Inspection

(1) Clean cylinder block thoroughly and inspect all core hole plugs for evidence of leaking.

(2) If new core plugs are installed, coat edges of plug and core hole with Number 1057794 Sealer or equivalent. Drive the core plug in so that the rim lies at least 1/64" below the lead-in chamfer.

(3) Examine block for cracks or fractures.

Cylinder Bore Inspection

The cylinder walls should be measured for out-of-round and taper with Tool C-119. If the cylinder bores show more than .005" out-of-round, or a taper of more than .010" or if the cylinder walls are badly scuffed or scored, the cylinder block should be rebored and honed, and new pistons and rings fitted.

Whatever type of boring equipment is used, boring and honing operation should be closely coordinated with the fitting of pistons and rings in order that specified clearance may be maintained.

Honing Cylinder Bores

Before honing, stuff plenty of clean rags under the bores, over the crankshaft to keep the abrasive materials from entering the crankcase area.

(1) Used carefully, the cylinder bore resizing hone C-823 equipped with 220 grit stones and 390 extensions necessary with the 426 cubic inch engine is the best tool for this job. In addition to deglazing, it will reduce taper and out-of-round as well as removing light scuffing, scoring or scratches. Usually, a few strokes will clean up a bore and maintain the required limits.

(2) Deglazing of the cylinder walls may be done using a cylinder surfacing hone, Tool C-3501, equipped with 280 grit stones (3501-3810) if the cylinder bore is straight and round. 20 to 60 strokes depending on the bore condition will be sufficient to provide a satisfactory surface. Inspect cylinder walls after each 20 strokes. Use honing oil C-3501-3880 or a light honing oil available from major oil distributors. **Do not use engine or transmission oil, mineral oil or kerosene.**

(3) Honing should be done by moving the hone up and down fast enough to get a cross-hatch pattern. When hone marks **intersect** at 60°, cross hatch angle is most satisfactory for proper seating of rings (see Fig. 31).

(4) After honing, it is necessary that the block be cleaned again to remove all traces of abrasives. Wash cylinder block and crankshaft thoroughly.

CAUTION: Be sure all abrasives are removed from the engine parts after honing. It is recommended that a solution of soap and water be used with a brush and the parts then thoroughly dried. The bore can be considered clean when it can be wiped clean with a white cloth and the cloth remains clean. Oil bores after cleaning to prevent rusting.

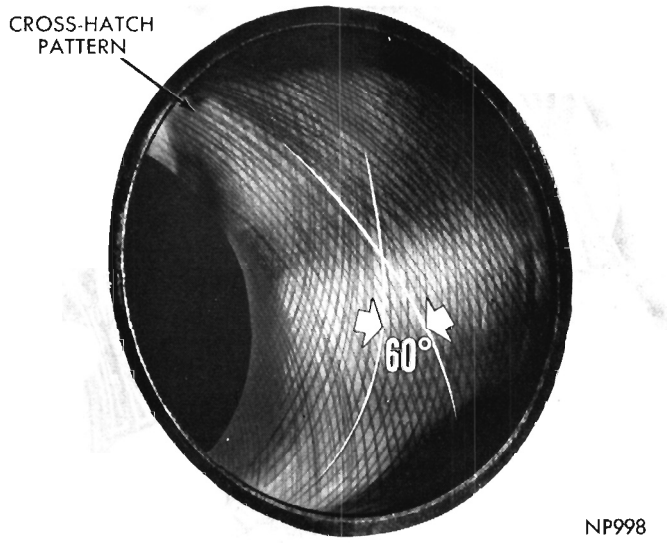

Fig. 31—Cross Hatch Pattern

PISTONS, PINS AND RINGS

Pistons

The pistons are cam ground so that the diameter at the pin boss is less than its diameter across the thrust face. This allows for expansion under normal operating conditions. Under operating temperatures, expansion forces the pin bosses away from each other, thus causing the piston to assume a more nearly round shape. It is important that old or new pistons be measured for taper and elliptical shape before they are fitted into the cylinder bore.

Finished Pistons

All pistons are machined to the same weight in grams, regardless of oversize so piston balance can be maintained. For cylinder bores which have been honed or rebored, pistons are available in standard and the following oversizes: .005, .020, and .040 inch.

Fitting Pistons

Piston and cylinder wall must be clean and dry. Specified clearance between the piston and the cylinder wall is **.0025** to **.0035** inch.

Piston diameter should be measured at the top of skirt 90 degrees to piston pin axis. Cylinder bores should be measured halfway down the cylinder bore and transverse to the engine crankshaft center line.

Pistons and cylinder bores should be measured at normal room temperature, 70 degrees F.

All service pistons include pins, and are available in standard and the following oversizes: .005, .020 and .040 inch.

Fitting Rings

(1) Measure piston ring gap about two inches from bottom of cylinder bore in which it is to be fitted. (An inverted piston can be used to push rings down to insure positioning rings squarely in cylinder wall before measuring.)

(2) Insert feeler stock in the gap. Ring gap should be between .013 to .025 inch for the compression rings and .015 to .062 inch for the oil ring steel rails in standard size bores. Maximum gap on .005 inch O/S bores should be .060 inch for compression rings and .070 inch for the oil ring steel rails.

(3) Measure side clearance between piston ring and ring groove. Clearance should be .0015 to .003 inches for the top compression ring and intermediate ring. Steel rail service oil ring should be free in groove, but should not exceed .005 inch side clearance.

(4) Install the three piece oil ring in lower ring groove using instructions in ring package.

(5) Install compression rings in middle and top groove as shown on instruction sheet. Be sure the mark "top" on each compression ring faces top of piston.

(6) For the two top rings use ring installer Tool C-3673.

Piston Pins

(1) The piston pin should be a tight thumb press fit in connecting rod and piston at normal room temperature, 70°F. If proper fit cannot be obtained with standard pins, hone or ream piston and connecting rod, and install oversize piston pin. Piston pins are supplied in standard and the following oversizes: .003 and .008 inch.

(2) Position the left cylinder bank (1-3-5-7) pistons so the arrow indicating front is to the left of the operator and the connecting rod insert locating tang or number is facing the operator. Install piston pin and lock rings with the bevel edge away from the piston pin, using Tool C-3915.

(3) Assemble the right cylinder bank (2-4-6-8) so the arrow is to the right of the operator with the connecting rod insert locating tang or number is facing the operator. Install piston pin and lock rings with the bevel edge away from the piston pin using Tool C-3915.

CRANKSHAFT IDENTIFICATION

IMPORTANT: A Maltese Cross stamped on the engine numbering pad indicates that engine is equipped with a crankshaft which has one or more connecting rods and/or main bearing journal finished .001 inch undersize. The position of the undersize journal or journals is stamped on a machine surface of the No. 3 counterweight. A Maltese Cross with an X indicates .010 inch undersize journals.

The connecting rod journals are identified by the letter "R" and main bearing journals by the letter "M". For example "M-1" indicates that No. 1 main bearing is .001 inch undersize.

CONNECTING RODS

Installation of Connecting Rod Bearings

Fit all rods on one bank until complete. Do not alternate from one bank to another, because when rods are assembled to the pistons correctly, they are not interchangeable from one bank to another.

The bearings should always be installed so that the small formed tang fits into the machined grooves of the rods. The end clearance should be from .009 to .017 inch (two rods).

Limits of taper or out-of-round on any crankshaft journals should be held to a maximum of .0005 inch. Bearings are available in .001, .002, .003, .010, .011 and .012 inch undersize.

Install the bearings in pairs. Do not use a new bearing half with an old bearing half. Do not file the rods or bearing caps.

MEASURING CONNECTING ROD BEARING CLEARANCE

Shim Stock Method

(1) Place an oiled .002 inch brass shim stock (1/2 inch wide and 3/4 inch long) between the bearing and connecting rod journal.

(2) Install bearing cap and tighten to 75 foot-pounds.

(3) Turn connecting rod 1/4 turn in each direction. A slight drag should be felt which indicates clearance is satisfactory. Correct clearance is from .0015 to .0025 inch.

(4) Side play should be from .009 to .017 inch.

INSTALLING PISTON AND CONNECTING ROD ASSEMBLY

(1) Before installing pistons, rods, and rod assemblies in the bore, be sure that the compression ring gaps are staggered so that neither are in line with oil ring rail gaps.

(2) The oil ring expander ends should be positioned toward the outside of the "V" of the engine. The oil ring rail gaps should be positioned opposite each other and above the piston pin holes.

(3) Immerse piston head and rings in clean engine oil, slide ring compressor, Tool C-385, over the piston and tighten with special wrench (part of Tool C-385).

(4) Be sure the position of rings does not change during this operation. Screw connecting rod bolt protectors on rod bolts.

Rotate crankshaft so connecting rod journal is on center of cylinder bore.

(5) Insert rod and piston into cylinder bore. Guide the rod over crankshaft journal.

(6) Tap piston down in cylinder bore, using handle of a hammer. At the same time, guide connecting rod into position on crankpin journal.

(7) The arrow on top of piston must be pointing toward front of engine and the number or the connecting rod insert locating tang must face outboard.

(8) Install rod caps, tighten nuts to 75 foot-pounds.

CRANKSHAFT MAIN JOURNALS

Crankshaft main bearing journals should be inspected for excessive wear, taper and scoring. Journal grinding should not exceed .012 inch under the standard journal diameter. **DO NOT** grind the thrust

faces of the No. 3 main bearing. Do not nick crankpin or main bearing fillets. After regrinding, remove rough edges from crankshaft oil holes and clean out all oil passages.

CRANKSHAFT MAIN BEARINGS

The number 2, 3 and 4 main bearing caps have two horizontal tie-bolts which anchor the bear caps to the sides of the block (Fig. 32).

New lower main bearings halves Number 1, 2, 4, 5 are interchangeable (Fig. 33). New upper main bearing halves Number 2, 4 and 5 are also interchangeable. Upper and lower bearing halves are not interchangeable because upper bearing is grooved and lower bearing is not.

The No. 1 upper main bearing **IS NOT INTERCHANGEABLE AND IS CHAMFERED** on the tab side for timing chain oiling and can be identified by a red marking on edge of bearing.

Upper and lower No. 3 bearings are flanged to carry the crankshaft thrust loads and are ***not interchangeable*** with any other bearings in the engine.

Bearings that are not badly worn or pitted must be reinstalled in the same position.

Bearing caps are not interchangeable and should be marked at removal to insure correct assembly. Bearings are available in standard and the following undersizes: .001, .002, .003, .010, .011 and .012 inch. Do not install an undersize bearing that will reduce clearance below specifications.

Removal

(1) Remove oil pan and identify bearing caps before removal.

(2) Remove bearing caps one at a time. Remove upper half of bearing by inserting Tool C-3059 (Fig. 34) into oil hole of crankshaft.

(3) Slowly rotate crankshaft clockwise, forcing out upper half of bearing.

Installation

Only one main bearing should be selectively fitted

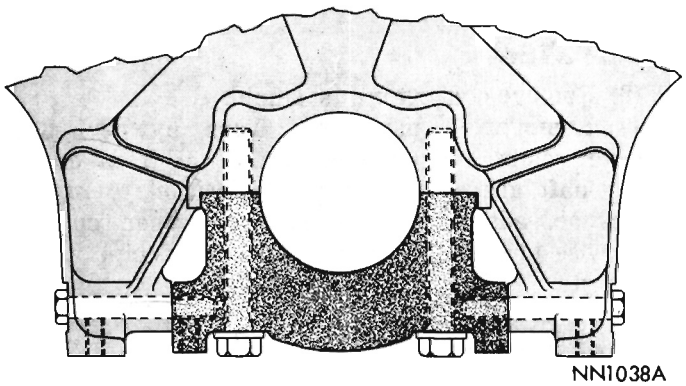

Fig. 32—Main Bearing Cap with Horizontal Tie-Bolts

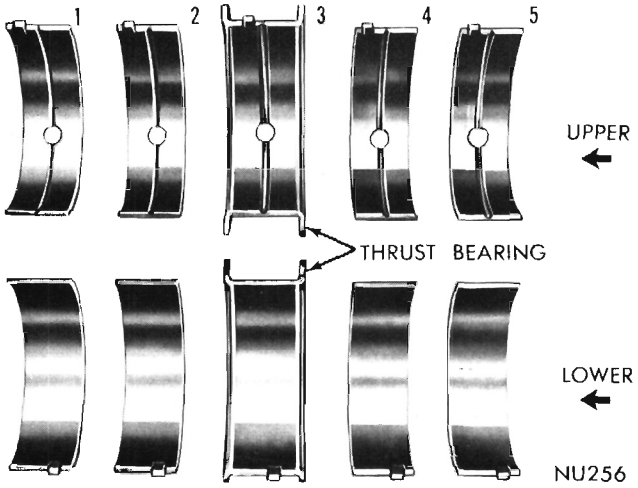

Fig. 33—Main Bearing Identification

while all other main bearing caps are properly torqued.

When installing a new upper bearing shell, slightly chamfer the sharp edges from the plain side.

(1) Start bearing in place, and insert Tool C-3059 into oil hole of crankshaft (Fig. 34).

(2) Slowly rotate crankshaft counter-clockwise sliding the bearing into position. Remove Tool C-3059.

MEASURING MAIN BEARING CLEARANCE

Shim Stock Method

(1) Smooth edges of a 1/2 x 3/4 inch piece of brass shim stock, .002 inch thickness.

(2) Install bearing in center main bearing cap, **bearing tang in groove in cap,** lubricate bearing and position shim stock across the bearing, install cap and horizontal tie bolts. Tighten cap bolts to 100 foot-pounds, then horizontal tie bolts to 45 foot-pounds.

(3) If a slight drag is felt as crankshaft is turned (moved no more than 1/4 turn in either direction),

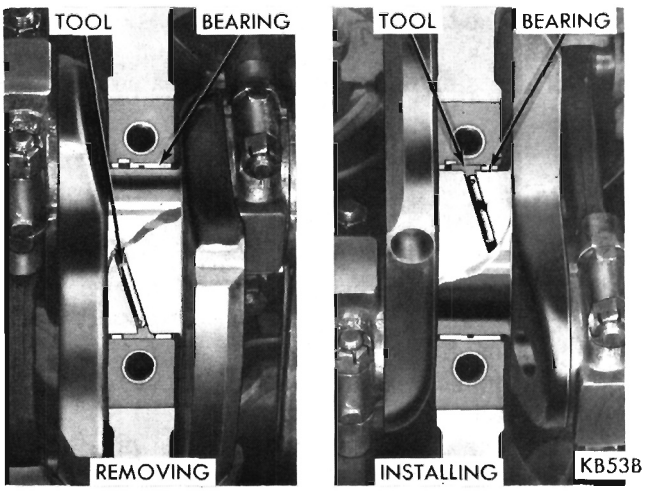

Fig. 34—Removing or Installing Upper Main Bearing

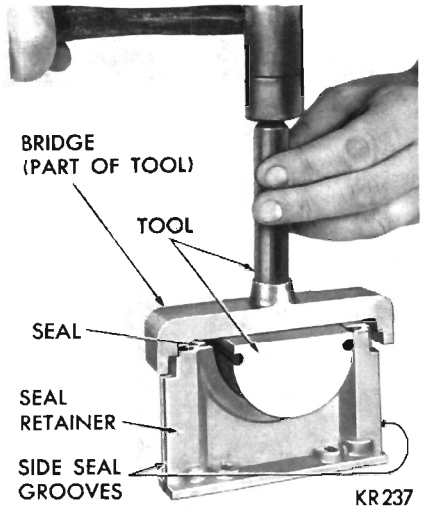

Fig. 35—Installing Rear Main Bearing Lower Oil Seal

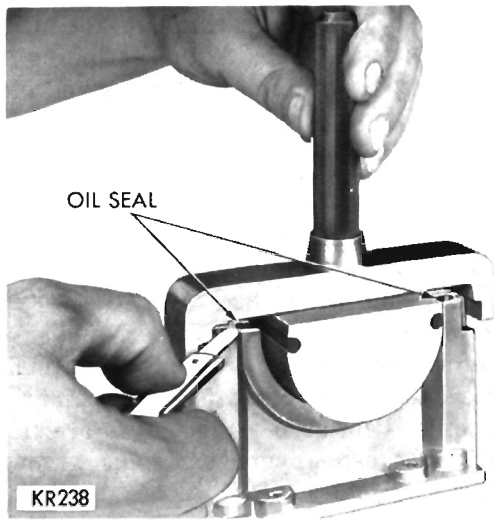

Fig. 36—Trimming Rear Main Bearing Lower Oil Seal

clearance is .002 inch or less and is considered satisfactory.

If, however, no drag is felt, the bearing is too large or crankshaft cannot be rotated, bearing is too small and should be replaced with the correct size.

(4) Measure crankshaft end play .002 to .007 inch. If end play is less than .002 inch or more than .007 inch, install a new number 3 main bearing.

(5) Fit remaining bearings in same manner.

It is permissable to use one .001 inch undersize bearing shell with one standard bearing shell or one .002 inch undersize bearing shell with one .001 inch undersize shell. **Always use the smaller diameter bearing half as the upper. Never use an upper bearing half more than .001 inch smaller than the lower bearing half and never use a new bearing half with a used bearing half.**

REAR MAIN BEARING OIL SEAL (Crankshaft Removed)

Upper Rear Main Seal Installation

(1) Install a new rear main bearing oil seal in cylinder block so that both ends protrude.

(2) Tap seal down into position, using Tool C-3743 with bridge removed until tool is seated in bearing bore.

(3) Hold the tool in this position and cut off portion of seal that extends above the block on both sides.

Lower Rear Main Seal Installation

(1) Install a new seal in seal retainer so ends protrude (Fig. 35).

(2) Install bridge on tool and tap the seal down into position with Tool C-3743 until tool is seated.

(3) Trim off that portion of the seal that protrudes above the cap (Fig. 36).

Side Seals Installation

Perform the following operations as rapidly as possible. These side seals are made from a material that expands quickly when oiled.

(1) Apply mineral spirits or diesel fuel to the side seals.

(2) Install seals immediately in the seal retainer grooves.

(3) Install seal retainer and tighten screws to 30 foot-pounds.

Failure to pre-oil the seals will result in an oil leak.

ENGINE OILING SYSTEM

OIL PAN

Removal

(1) Disconnect battery cable and remove dipstick.

(2) Raise vehicle on a hoist and disconnect steering linkage from idler arm and steering arm.

(3) Disconnect exhaust pipe branches from right and left manifolds.

(4) Remove clamp attaching exhaust pipe to extension and remove exhaust pipe.

(5) Drain crankcase oil.

(6) Remove converter dust shield.

(7) Remove oil pan bolts. Turn flywheel until counterweight and connecting rods at front end of crankshaft are at their highest position to provide clearance, and lower the pan. Turn pan counterclockwise to clear oil screen and suction pipe as it is lowered.

Installation

(1) Inspect alignment of oil strainer. The bottom of the strainer must be on a horizontal plane with

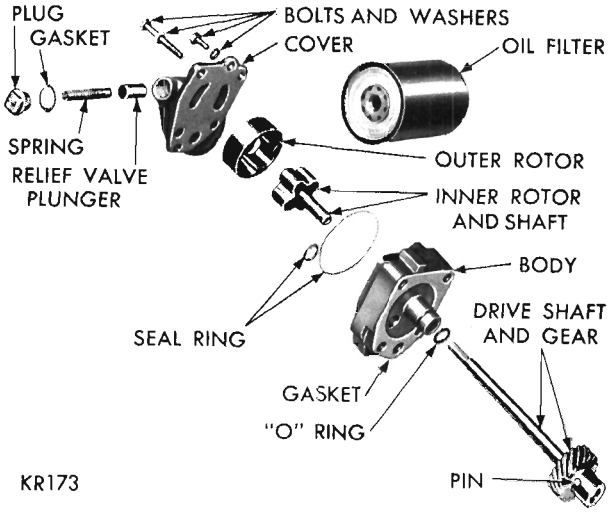

Fig. 37—Oil Pump and Filter Assembly (Disassembled View)

machined surface of cylinder block. The bottom of the strainer must touch the bottom of oil pan.

(2) Install oil pan.

(3) Install converter dust shield.

(4) Connect exhaust pipe branches to the manifolds and to the exhaust extension.

(5) Connect steering linkage at idler arm and at pitman arm.

(6) Connect battery cable.

(7) Install drain plug and refill crankcase with the proper grade and quantity of oil.

OIL PUMP

Removal

Remove oil pump attaching bolts and remove pump and filter assembly from bottom side of engine.

Disassembly

(1) Remove filter base and oil seal ring.

(2) Remove pump rotor and shaft and lift out outer pump rotor.

(3) Remove the oil pressure relief valve plug and lift out the spring and relief valve plunger (Fig. 37).

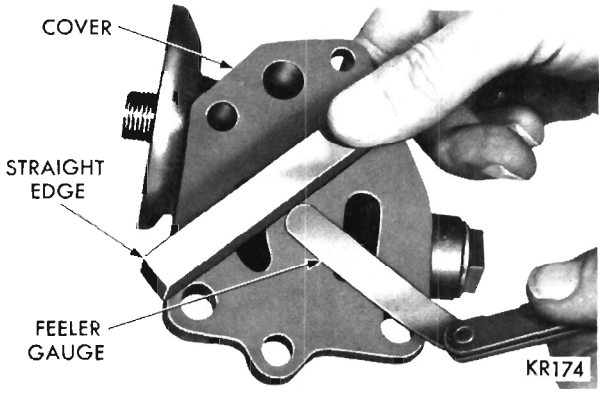

Fig. 38—Measuring Oil Pump Cover Flatness

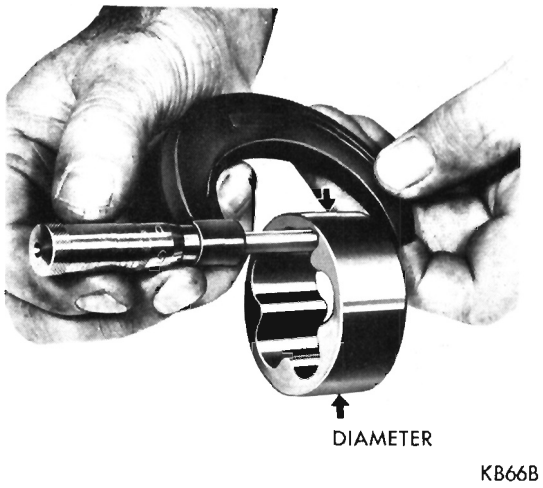

Fig. 39—Measuring Outer Rotor Thickness

Inspection and Assembly

(1) Clean all parts thoroughly. The mating face of filter base (oil pump cover) should be smooth. Replace filter base if it is scratched or grooved.

(2) Lay a straightedge across oil pump filter base surface (Fig. 38). If a .0015 inch feeler gauge can be inserted between the base and straightedge, filter base should be replaced.

(3) If outer rotor length measures less than .943 inch (Fig. 39) and diameter less than 2.469 inches, replace outer rotor.

(4) If inner rotor length measures less than .942 inch (Fig. 40), a new inner rotor should be installed.

(5) Install outer rotor into pump body, pressing to one side with fingers and measure clearance between outer rotor and pump body (Fig. 41). If measurement is more than .012 inch, replace oil pump body.

(6) Install inner rotor into pump body and place a straightedge across the face between bolt holes (Fig. 42). If a feeler gauge of more than .004 inch can be inserted between the rotors and straightedge, replace pump body.

(7) If the tip clearance between inner and outer



Fig. 40—Measuring Inner Rotor Thickness

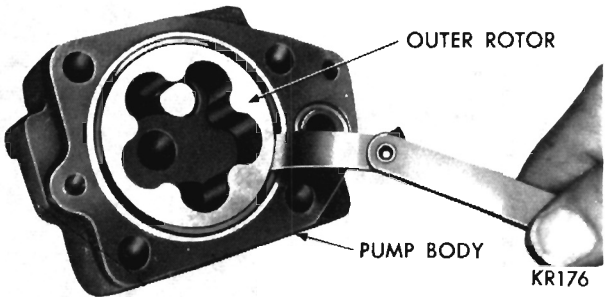

Fig. 41—Measuring Outer Rotor Clearance

rotors (Fig. 43) is more than .010 inch, replace inner and outer rotor.

Servicing Oil Pressure Relief Valve

Inspect oil pump relief valve plunger for scoring and free operation in its bore. Small scores may be removed with 400 grit wet or dry paper.

The relief valve spring has a free length of 2-9/32 to 2-19/64 inch and should test 22.3 to 23.3 lbs. when compressed to 1-19/32 inch. Discard spring that fails to meet specifications.

If the oil pressure is low, inspect for worn bearings, or look for other causes of possible loss of oil pressure. **When assembling the oil pump, be sure to use new oil seal rings between filter base and pump body.**

Installation

(1) Install a new "O" ring seal on the pilot of oil pump before attaching oil pump to cylinder block.

(2) Install oil pump on engine, using a new gasket on engine and tighten attaching bolts to 35 foot-pounds. Install oil filter element.

OIL FILTER REPLACEMENT

The "spin on" oil filter should be replaced preferable to concide with every second oil change.

Removal

Use care so as not to damage transmission oil cooler lines.

(1) Using Tool C-3845 unscrew the filter from the base on bottom side of engine and discard (Fig. 44).

(2) Wipe base clean.

Installation

(1) Install the "spin" oil filter by hand, finger tight. Do not use tool.

(2) To obtain an effective seal, tighten filters by hand the additional number of turns indicated on the replacement filter. Start engine and inspect for leaks.

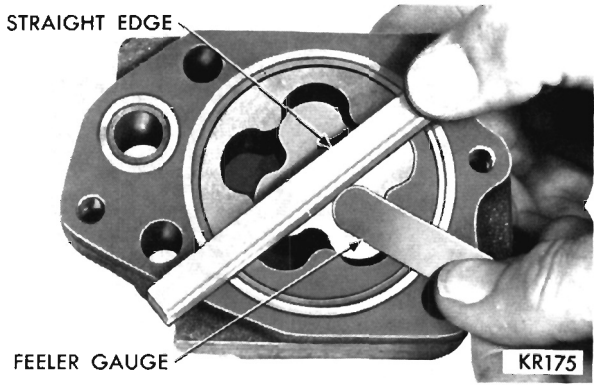

Fig. 42—Measuring Clearance Over Rotors

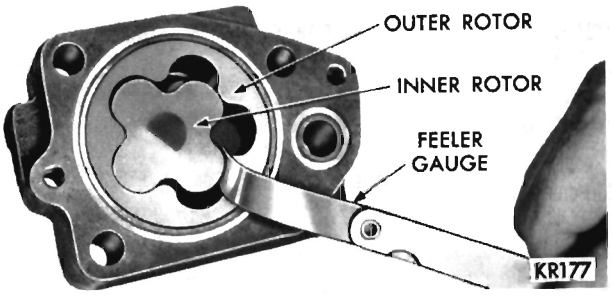

Fig. 43—Measuring Clearance Between Rotors

CRANKCASE VENTILATION SYSTEM

A fully closed crankcase ventilation system is installed on all vehicles. The fully closed ventilation system operates by air drawn into the crankcase from the air cleaner and through the oil-filler cap by means of a hose (Fig. 1). Air is circulated through the engine and drawn out of the cylinder head cover by manifold vacuum into the combustion chambers and dispelled with the exhaust gases.

The system consists of a ventilation valve installed in the outlet vent of the cylinder head cover, and a hose. The hose is connected between the outlet vent and the lower part of the carburetor body. The function of the valve is to regulate the flow of crankcase ventilation at various throttle positions and will operate effectively as long as normal maintenance is applied.

The valve and hose are subject to fouling with



Fig. 44—Removing Oil Filter

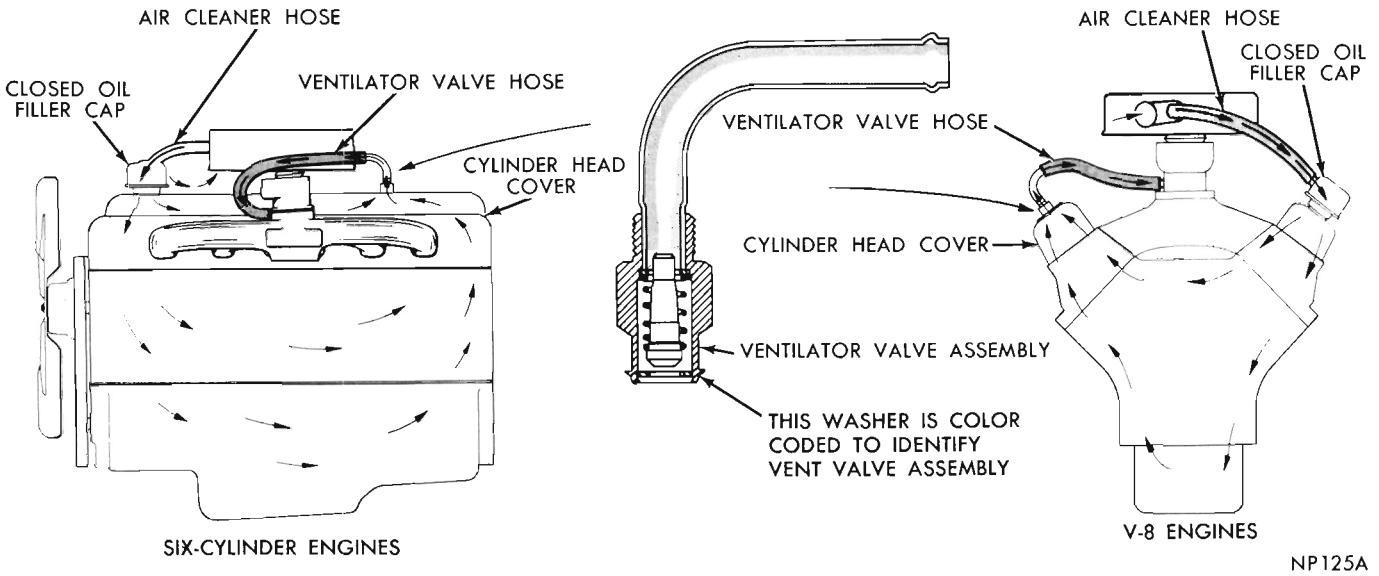

Fig. 1—Fully Closed Ventilation System

sludge and carbon formation due to the nature of the material carried by the ventilation system.

A plugged vent system may in turn cause excessive engine crankcase sludge formation and may also cause rough or erratic engine idle or excessive oil leakage. The ventilation system should be cleaned every six months and valve replaced every year in average service and more frequently if the vehicle is used extensively for short trips—driving less than 10 miles —with frequent idling, such as city traffic.

See the "Lubrication and Maintenance" section, Group O of this manual for proper service procedures.

REPAIR OF DAMAGED OR WORN THREADS

Damaged or worn threads can be repaired by the use of Heli-Coils. Essentially, this repair consists of drilling out worn or damaged threads, tapping the hole with a special Heli-Coil Tap, and installing a Heli-Coil Insert into the tapped hole. This brings the hole back to its original thread size (See Fig. 2).

The following chart lists the threaded hole sizes which are used in the engine block and the necessary tools and inserts for the repair of damaged or worn thread. Heli-Coil tools and inserts are readily available from automotive parts jobbers.

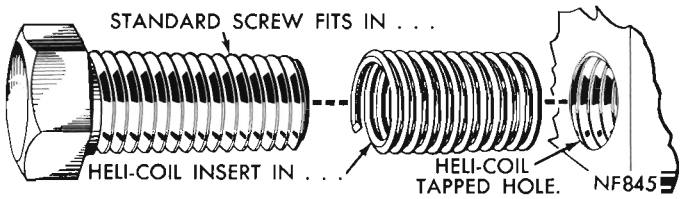

Fig. 2—Heli-Coil Installation

Heli-Coil Insert			Drill	Tap	Inserting Tool	Extracting Tool
Thread Size	Part No.	Insert Length	Size	Part No.	Part No.	Part No.
1/2-20	1185-4	3/8″	17/64(.266)	4 CPB	528-4N	1227-6
5/16-18	1185-5	15/32″	Q(.332)	5 CPB	528-5N	1227-6
3/8-16	1185-6	9/16″	X(.397)	6 CPB	528-6N	1227-6
7/16-14	1185-7	21/32″	29/64(.453)	7 CPB	528-7N	1227-16
1/2-13	1185-8	3/4″	33/64(.516)	8 CPB	528-8N	1227-16

SPECIFICATIONS

SIX CYLINDER ENGINE

170-225 Cubic Inch Engines	
Type	In-Line OHV
Number of Cylinders	6
Bore	3.40″
Stroke—170 Cubic Inch	3.125″
225 Cubic Inch	4.125″

Piston Displacement	170—225 Cu. In.
Compression Ratio—170 Cubic Inch	8.50 to 1
225 Cubic Inch	8.40 to 1
Compression Pressure with Engine Warm, Spark Plugs Removed, Wide Open Throttle	110—140 psi
Maximum Variation Between Cylinders (any one engine)	20 psi
Firing Order	1-5-3-6-2-4
Basic Timing 170 Cubic Inch Manual Transmission	5° ATC
Automatic Transmission	TDC
225 Cubic Inch All	TDC
CRANKSHAFT	
Type	Fully Counter-Balanced
Bearings	Steel-Backed Babbitt
Main Bearing Journal Diameter	2.7495 to 2.7505"
Connecting Rod Journal Diameter	2.1865 to 2.1875"
Maximum Out-of-Round Permissible	.001"
Number Main Bearings	4
Clearance Desired	.0005 to .0015"
Maximum Clearance Allowance Before Reconditioning	.0025"
End Play	.002" to .007"
Thrust Taken by	No. 3 Main Bearing
Finish at Rear Seal Surface	Diagonal Knurling
Interchangeability of Bearings	Upper Nos. 2, 4 Lower Nos. 1, 2, 4
MAIN BEARINGS (service)	
All available in Standard and the following Undersizes	.001, .002, .003, .010, .012"
CONNECTING RODS AND BEARINGS	
Type	Drop Forged "I" Beam
Length (Center to Center)	170—5.705 to 5.709" 225—6.697 to 6.701"
Weight (Less Bearing Shells)	170—25.3 oz. 225—26.8 oz.
Bearings	Steel-Backed Babbitt
Diameter and Length	2.1870 x 1.015"
Clearance Desired	.0005 to .0015"
Maximum Allowable before Reconditioning	.0025"
Side Clearance	.006 to .012"
Bearings for Service	Standard .001, .002, .003, .010, .012" U.S.
Piston Pin Bore Diameter	.8995 to .9000"
CAMSHAFT	
Drive	Chain
Bearings	Steel-Backed Babbitt
Number	4
Thrust Taken by	Cylinder Block
Clearance	.001 to .003"
Maximum Allowable Before Reconditioning	.005"
CAMSHAFT BEARING JOURNALS	
Diameter	
No. 1	1.998 to 1.999"
No. 2	1.982 to 1.983"
No. 3	1.967 to 1.968"
No. 4	1.951 to 1.952"
CAMSHAFT BEARINGS	
Diameter (after reaming)	
No. 1	2.000 to 2.001"
No. 2	1.984 to 1.985"
No. 3	1.969 to 1.970"
No. 4	1.953 to 1.954"
TIMING CHAIN	
Number of Links	50
Pitch	.50"
Width	.88"

TAPPETS	
Type	Mechanical
Clearance in Block	.0012 to .0025"
Body Diameter	.9040 to .9045"
Clearance Between Valve Stem and Rocker Arm Pad (Engine Hot)	.010" Intake .020" Exhaust
PISTONS	
Type	Horizontal Slot w/Steel Struts
Material	Aluminum Alloy Tin Coated
Land Clearance (diametrical)	.024 to .031"
Clearance at Top of Skirt	.0005 to .0015"
Weight (std. through .040 oversize)	465 gms.
Piston Length (overall)	3.51"
Ring Groove Depth	
No. 1	.179"
No. 2	.179"
No. 3	.181"
Pistons for Service	Std. .005, .020, .040" O.S.
PISTON PINS	
Type	Press Fit in Rod
Diameter	.9007—.9009"
Length	2.955—2.975"
Clearance in Piston	.00045 to .00075"
Interference in Rod	.0007 to .0012"
Piston Pins for Service	Standard Only
Direction Offset in Piston	Toward Right Side of Engine

PISTON RINGS	225 Cubic Inch	170 Cubic Inch
Number of Rings per Piston	3	3
Compression	2	2
Oil	1	1
Oil Ring Type	3-piece steel rail chrome-face	Cast Iron with expander
Ring Width		
Compression	.0775"-.0780"	.0775"-.0780"
Oil—Cast iron	—	.1860"-.1865"
Steel rails	.025"	—
Ring Gap		
Compression	.010"-.020"	.010"-.020"
Oil—Cast iron	—	.010"-.020"
Steel rails	.015"-.055"	—
Ring Side Clearance		
Compression	.0015"-.0030"	.0015"-.0030"
Oil—Cast iron	—	.0015"-.0030"
Steel rails	.0002"-.005"	—
Service Rings		
Ring Gap		
Compression	.010"-.047"	.010"-.047"
Oil (Steel rails) Cast Iron not available	.015"-.062"	.015"-.062"
Ring Side Clearance		
Compression	.0015"-.004"	.0015"-.004"
Oil (Steel rails) Cast Iron not available	.0002"-.005"	.0002"-.005"

VALVE TIMING	
Intake Opens (BTC)	10°
Closes (ABC)	50°
Exhaust Opens (BBC)	50°
Closes (ATC)	6°
Valve Overlap	16°
Intake Valve Duration	240°
Exhaust Valve Duration	236°
VALVES—Intake	
Material	Carbon Manganese Steel
Head Diameter	1.615—1.625"
Length (to gauge dim. Line)	4.6878—4.7028"
Stem Diameter	.372 to .373"
Stem to Guide Clearance	.001 to .003"

Maximum Allowable Before Reconditioning	.017"*
Valve Face Angle	45°
Adjustment	Rocker Arm Screw
Lift	.395"
VALVES—Exhaust	
Material	Nitrogen Treated Manganese Chromium Nickel Steel
Head Diameter	1.355—1.365"
Length (to gauge dim. Line)	4.6878—4.7028"
Stem Diameter	.371 to .372"
Stem to Guide Clearance	.002 to .004"
Maximum Allowable Before Reconditioning	.017"*
Valve Face Angle	43°
Adjustment	Rocker Arm Screw
Lift	.395"
VALVE SPRINGS	
Number	12
Free Length	1.92"
Load when Compressed to (valve closed)	49—57 lbs. @ 1-11/16"
Load when Compressed to (valve open)	137/150 lbs. @ 1-5/16"
Valve Springs I.D.	1.010 to 1.030"
Valve Spring Installed Height (spring seat to retainer)	1-5/8 - 1-11/16"
Use 1/16 inch spacer to reduce spring height when over specifications	
CYLINDER HEAD	
Combustion Chamber	Wedge Type
Valve Seat Run-Out (maximum)	.002"
Intake Valve Seat Angle	45°
Seat Width (finished)	.070 to .090"
Exhaust Valve Seat Angle	45°
Seat Width (finished)	.040 to .060"
Cylinder Head Gasket Compressed (thickness)	.022"
CYLINDER BLOCK	
Cylinder Bore (standard)	3.4000"
Cylinder Bore Out-of-Round (Max. allowable before reconditioning)	.005"
Cylinder Bore Taper (Max. allowable before reconditioning)	.010"
Reconditioning Working Limits (for taper and out-of-round)	.001"
Maximum Allowable Oversize Cylinder Bore	.040"
Tappet Bore Diameter	.9050—.9058"
Distributor Lower Drive Shaft Bushing (press fit in block)	.0005—.0040"
Ream to	.4865—.4880"
Shaft to Bushing Clearance	.0007—.0027"
ENGINE LUBRICATION	
Pump Type	Rotary, Full Pressure
Capacity (qts.)	4 U.S. or 3-1/4 Imperial**
Pump Drive	Camshaft
Operating Pressure at 1000 RPM	45 to 60 lbs.
Pressure Drop Resulting from Clogged Filter	7 to 9 lbs.
OIL FILTER	
Type	Full Flow
Spin On	Replaceable

OIL PUMP—INSPECTION LIMITS FOR REPLACEMENT

Oil Pump Cover	.0015 inch or more
Outer Rotor Length	.649 inch or less
Outer Rotor Diameter	2.469 inch or less
Inner Rotor Length	.649 inch or less
Clearance Over Rotors—Outer	.004 inch or more
Inner	.004 inch or more
Outer Rotor Clearance	.012 inch
Tip Clearance Between Rotors	.010 inch or more

* With tools C-3973 and C-3339 using wobble method.
** When Filter Element is Replaced, Add 1 U.S. Quart or 3/4 Imperial Quart.

OVERSIZE AND UNDERSIZE ENGINE COMPONENT MARKINGS

Engine Displacement	Condition	Identification	Location of Identification
170 cu. in. 225 cu. in.	.001" U/S Crankshaft	Maltese Cross M-2-3 etc. (indicating No. 2 & 3 main bearing journal) and/or R-1-4 etc. (indicating No. 1 & 4 connecting rod journals)	Top of front pad—Right side of block Crankshaft counterweight
	.010" U/S Crankshaft	Maltese Cross and X M-10 (indicates .010" U/S all main journals) and/or R-10 (indicates .010" U/S all rod journals)	Top of front pad—Right side of block Crankshaft counterweight
	.020" O/S Cylinder Bores	A	Top of front pad—Right side of block
	.008" O/S Tappets	♦	Top of front pad—Right side of block

8-CYLINDER ENGINES

ENGINE	"273"	"318"	"340"
Type	90°V	90°V	90°V
Number of Cylinders	8	8	8
Bore	3.625"	3.91"	4.040"
Stroke	3.31"	3.31"	3.31"
Piston Displacement	273 cu. in.	318 cu. in.	340 cu. in.
Compression Ratio	9.0 to 1	9.2 to 1	10.5 to 1
Compression Pressure with engine warm spark plugs removed—wide open throttle	120-150 psi	125-155 psi	130-175 psi
Maximum variation between cylinders (any one Engine)	20 psi	25 psi	20 psi
Firing Order	1-8-4-3-6-5-7-2	1-8-4-3-6-5-7-2	1-8-4-3-6-5-7-2
Basic Timing	2-1/2° ATC Automatic 2-1/2° ATC Manual	TDC Automatic TDC Manual	5° BTC Automatic TDC Manual
CYLINDER NUMBERING (front to rear)			
Left Bank	1-3-5-7	1-3-5-7	1-3-5-7
Right Bank	2-4-6-8	2-4-6-8	2-4-6-8
CYLNDER BLOCK			
Cylinder Bore (standard)	3.625"-3.6270"	3.910"-3.912"	4.040"-4.0420"
Cylinder Bore Out-of-Round (Max. allowable before reconditioning)	.005"	.005"	.005"
Cylinder Bore Taper (Max. allowable before reconditioning)	.010"	.010"	.010"
Reconditioning Working Limits (for taper and out-of-round)	.001"	.001"	.001"
Maximum Allowable Oversize (cylinder bore)	.040"	.040"	.040"
Tappet Bore Diameter	.9050"-9058"	.9050"-.9058"	.9050"-.9058"
Distributor Lower Drive Shaft Bushings (press fit in block)	.0005"-.0040"	.0005"-.0040"	.0005"-.0040"
Ream to	.4865"-.4880"	.4865"-.4880"	.4865"-.4880"
Shaft to Bushing Clearance	.0007"-.0027"	.0007"-.0027"	.0007"-.0027"
PISTONS			
Type Material	Autothermic Alloy Tin Coated	Autothermic Alloy Tin Coated	Autothermic Alloy Tin Coated
Land Clearance (diametrical)	.019"-.027"	.019"-.027"	.019"-.027"
Clearance at Top of Skirt	.0005"-.0015"	.0005"-.0015"	.0005"-.0015"
Weight (Std. through .040" oversize)	549 gms.*	592 gms.	719 gms.
Piston Length (overall)	3.19"	3.21"	3.545"
Ring Groove Depth			
No. 1	.189"	.205"	.210"
No. 2	.189"	.205"	.210"
No. 3	.184"	.194"	.198"
Pistons for Service	Std. .005", .020", .040" Oversize	Std. .005", .020", .040" Oversize	Std. .005", .020", .040" Oversize
PISTON PINS			
Type	Full Floating	Full Floating	Full Floating

	"273"	"318"	"340"
Diameter	.9841"-9843"	.9841"-.9843"	.9841"-.9843"
Length	2.810"-2.820"	2.990"-3.000"	2.990"-3.000"
Clearance in Piston (Light Thumb Push @ 70°F.)	.0000"-.0005"	.0000"-.0005"	.0000"-.0005"
End Play	.004"-.026'	.004"-.026"	.004"-.026"
Clearance in Rod	.0000"-.0005"	.0000"-.0005"	.0000"-.0005"
Pins for Service	Std. .003", .008" Oversize	Std. .003", .008" Oversize	Std. .003", .008" Oversize
PISTON RINGS			
Number of Rings per Piston	3	3	3
Compression	2	2	2
Oil	1	1	1
Oil Ring Type	3-piece steel rail chrome-face	3-piece steel rail chrome-face	3-piece steel rail chrome-face
Ring Width			
Compression	.0775"-.0780"	.0775"-.0780"	.0775"-.0780"
Oil—Steel rails	.025"	.025"	.025"
Ring Gap			
Compression	.010"-.020"	.010"-.020"	.010"-.020"
Oil—Steel rails	.015"-.055"	.015"-.055"	.015"-.055"
Ring Side Clearance			
Compression	.0015"-.0030"	.0015"-.0030"	.0015"-.0030"
Oil—Steel rails	.0002"-.005"	.0002"-.005"	.0002"-.005"
Service Rings			
Ring Gap			
Compression	.010"-.020"	.010"-.020"	.010"-.020"
Oil (Steel rails)	.015"-.062"	.015"-.062"	.015"-.062"
Ring Side Clearance			
Compression	.0015"-.004"	.0015"-.004"	.0015"-.004"
Oil (Steel rails)	.0002"-.005"	.0002"-.005"	.0002"-.005"
CONNECTING RODS			
Length (Center to Center)	6.123"	6.123"	6.123"
Weight (less bearing shells)	726 gms.	726 gms.	726 gms.
Side Clearance (two rods)	.006"-.014"	.006"-.014"	.006"-.014"
Piston Pin Bore Diameter	1.027"-1.039"	1.027"-1.039"	1.027"-1.039"
CONNECTNG ROD BUSHING			
Type	Steel Backed Bronze	Steel Backed Bronze	Steel Backed Bronze
CONNECTING ROD BEARINGS (Type)	Steel Backed Grid Type	Steel Backed Grid Type	Tri-Metal Steel Backed
Diameter and Width	2.126" x .842"	2.126" x .842"	2.126" x .842"
Clearance desired	.0005"-.0015"	.0005"-.0015"	.0005"-.0020"
Maximum Allowable	.0025"	.0025"	.003"
Bearings for Service	Std., .001", .002" .003", .010", .012"	Std., .001", .002" .003", .010", .012"	Std., .001", .002" .003", .010", .012"
CRANKSHAFT			
Type	Fully Counter-Balanced	Fully Counter-Balanced	Fully Counter-Balanced
Bearings	Steel Backed Babbitt	Steel Backed Babbitt	Steel Backed Aluminum #1, 2, 3 & 4 Steel Backed Babbitt #5

		"273"	"318"	"340"
Thrust Taken By		No. 3 Main Bearing	No. 3 Main Bearing	No. 3 Main Bearing
End Play		.002"-.007"	.002"-.007"	.002"-.007"
Maximum Allowable		.010"	.010"	.010"
Diametral Clearance Desired		.0005"-.0015"	.0005"-.0015"	.0005"-.0015"
Diametral Clearance Allowed		.0025"	.0025"	.0025"
Finish at Rear Oil Seal Surface		Diagonal Knurling	Diagonal Knurling	Diagonal Knurling
MAIN BEARING JOURNALS				
Diameter		2.4995"-2.5005"	2.4995"-2.5005"	2.4995"-2.5005"
Maximum Allowable Out-of-Round and/or Taper		.001"	.001"	.001"
Bearings for Service Available in Standard and the following undersizes		.001", .002", .003", .010", .012"	.001", .002", .003", .010", .012"	.001", .002", .003", .010", .012"
CONNECTING ROD JOURNALS				
Diameter		2.124"-2.125"	2.124"-2.125"	2.124"-2.125"
Maximum Allowable Out-of-Round and/or Taper		.001"	.001"	.001"
CAMSHAFT				
Drive		Silent Chain	Silent Chain	Roller Chain
Bearings		Steel Backed Babbitt	Steel Backed Babbitt	Steel Backed Babbitt
Number		5	5	5
Diametral Clearance		.001"-.003"	.001"-.003"	.001"-.003"
Maximum Allowable before Reconditioning		.005"	.005"	.005"
Thrust Taken By		Thrust Plate	Thrust Plate	Thrust Plate
End Play		.002"-.006"	.002"-.006"	.002"-.006"
Maximum Allowable		.010"	.010"	.010"
CAMSHAFT JOURNALS				
Diameter	No. 1	1.998"-1.999"	1.998"-1.999"	1.998"-1.999"
	No. 2	1.982"-1.983"	1.982"-1.983"	1.982"-1.983"
	No. 3	1.967"-1.968"	1.967"-1.968"	1.967"-1.968"
	No. 4	1.951"-1.952"	1.951"-1.952"	1.951"-1.952"
	No. 5	1.5605"-1.5615"	1.5605"-1.5615"	1.5605"-1.5615"
CAMSHAFT BEARINGS				
Diameter	No. 1	2.000"-2.001"	2.000"-2.001"	2.000"-2.001"
	No. 2	1.984"-1.985"	1.984"-1.985"	1.984"-1.985"
	No. 3	1.969"-1.970"	1.969"-1.970"	1.969"-1.970"
	No. 4	1.953"-1.954"	1.953"-1.954"	1.953"-1.954"
	No. 5	1.5625"-1.5635"	1.5625"-1.5635"	1.5625"-1.5635"
VALVE TIMING				
Intake Opens (BTC)		10°	10°	22°
Intake Closes (ABC)		50°	50°	66°
Exhaust Opens (BBC)		58°	58°	74°
Exhaust Closes (ATC)		10°	10°	22°
Valve Overlap		20°	20°	44°
Intake Valve Duration		240°	240°	268°
Exhaust Valve Duration		248°	248°	276°
TIMING CHAIN				
Number of Links		68	68	68
Pitch		.375"	.375"	.375"
Width		.625"	.625"	.870"
TAPPETS				
Type		Hydraulic	Hydraulic	Hydraulic
Body Diameter		.9040"-.9045"	.9040"-.9045"	.9040"-.9045"

	"273"	"318"	"340"
Clearance in Block	.0005"-.0018"	.0005"-.0018"	.0005"-.0018"
Service Tappets Available	Std., .001", .008", .030"	Std., .001", .008", .030"	Std., .001", .008", .030"
CYLINDER HEAD			
Valve Seat Run-Out (Maximum)	.002"	.002"	.002"
Intake Valve Seat Angle	45°	45°	45°
Seat Width (finish)	.060"-.085"	.060"-.085"	.060"-.085"
Exhaust Valve Seat Angle	45°	45°	45°
Seat Width (finish)	.040"-.060"	.040"-.060"	.040"-.060"
Cylinder Head Gasket (Thickness compressed)	.029"	.029"	.030"
VALVE GUIDES			
Type	Cast in Head	Cast in Head	Cast in Head
Guide Bore Diameter	.374"-.375" Std.	.374"-.375" Std.	.374"-.375" Std.
VALVES—(INTAKE)			
Head Diameter	1.780"	1.780"	2.02"
Length (to center of valve face)	4.90"	4.90"	4.90"
Stem Diameter (Standard)	.372"-.373"	.372"-.373"	.372"-.373"
Stem to Guide Clearance	.001"-.003"	.001"-.003"	.001"-.003"
Maximum Allowable	.017"*	.017"*	.017"*
Face Angle	45°	45°	45°
Valve for Service (Oversize Stem Diam.)	Std., .005", .015", .030"	Std., .005", .015", .030"	Std., .005", .015", .030"
Lift (Zero Lash)	.373"	.373"	.429"
VALVES—(EXHAUST)			
Head Diameter	1.563"	1.563"	1.60"
Length to (center of valve face)	4.90"	4.90"	4.90"
Stem Diameter (Standard)	.371"-.372"	.371"-.372"	.371"-.372"
Stem to Guide Clearance	.002"-.004"	.002"-.004"	.002"-.004"
Maximum Allowable	.017"*	.017"*	.017"*
Face Angle	43°	43°	43°
Valve for Service (Oversize Stem Diam.)	Std., .005, .015", .030"	Std., .005", .015", .030"	Std., .005", .030"
	.399"	.399"	.444"
VALVE SPRINGS			
Number	16	16	16
Free Length	2.00"	2.00"	1.94"
Load when Compressed to (valve closed with surge damper removed)	78-88 lbs. @ 1-11/16"	78-88 lbs. @ 1-11/16"	80-90 lbs. @ 1-11/16"
Load when Compressed to (valve open with surge damper removed)	170-184 lbs. @ 1-5/16"	170-184 lbs. @ 1-5/16"	235-249 lbs. @ 1-7/32"
Valve Springs I.D.	1.010"-1.030"	1.010"-1.030"	1.070"-1.090"
Maximum Allowable Out of Plumb	1/16"	1/16"	.080"
Valve Spring Installed Height (spring seat to retainer)	1-5/8" - 1-11/16"	1-5/8" - 1-11/16"	1-5/8"-1-11/16"
Use 1/16" Spacer to Reduce Spring Height when Over Specifications			

*With tools C-3973 & C-3339 using wobble method.

	"273"	"318"	"340"
ENGINE LUBRICATION			
Pump Type	Rotary Full Pressure	Rotary Full Pressure	Rotary Full Pressure
Capacity (qts.)	4 U.S. or 3-1/4 Imperial**	4 U.S. or 3-1/4 Imperial**	4 U.S. or 3-1/4 Imperial**
Pump Drive	Camshaft	Camshaft	Camshaft
Minimum Pump Pressure @ 500 R.P.M.	20 PSI	20 PSI	20 PSI
Operating Pressure at 1000 R.P.M.	45-65 lbs.	45-65 lbs.	45-65 lbs.
Pressure Drop Resulting from Clogged Filter	7-9 lbs.	7-9 lbs.	7-9 lbs.
Oil Filter Type	Full-Flow	Full flow	Full flow

** When Filter Element is Replaced Add 1 U.S. Quart or 3/4 Imperial Quart.

OIL PUMP—INSPECTION LIMITS FOR REPLACEMENT

	273, 318 and 340 Cu. In. Engines
Oil Pump Cover	.0015 inch or more
Outer Rotor Length	.825 inch or less
Outer Rotor Diameter	2.469 inch or less
Inner Rotor Length	.825 inch or less
Clearance Over Rotors—Outer	.004 inch or more
Inner	.004 inch or more
Outer Rotor Clearance	.012 inch or more
Tip Clearance Between Rotors	.010 inch or more

OVERSIZE AND UNDERSIZE ENGINE COMPONENT MARKINGS

Displacement	Condition	Identification	Location of Identification
273 cu. in. 318 cu. in. 340 cu. in.	.001" U/S Crankshaft	R or M M-2-3 etc. (indicating No. 2 & 3 main bearing journal) and/or R-1-4 etc. (indicating No. 1 & 4 connecting rod journal)	Milled flat on number eight crankshaft counterweight
	.010" U/S Crankshaft	RX or MX MX (indicates .010" U/S all main journals) and/or RX (indicating .010" U/S all rod journals)	Milled flat on number eight crankshaft counterweight
	.020" O/S Cylinder Bores	A	Following engine serial number

8-CYLINDER ENGINES

ENGINE	"383"	"440"
Type	90° V	90° V
Number of Cylinders	8	8
Bore	4.25"	4.320"
Stroke	3.375"	3.750"
Piston Displacement	383 cu. in.	440 cu. in.
Compression Ratio	9.2 to 1* 10.0 to 1**	10.1 to 1
Compression Pressure with engine warm spark plugs removed—wide open throttle	125-155 psi* 130-165 psi**	130-165 psi
Maximum variation between cylinders (any one Engine)	20 psi* 25 psi**	25 psi
Firing Order	1-8-4-3-6-5-7-2	1-8-4-3-6-5-7-2
Basic Timing all with C.A.P. ..... Manual	TDC*	—
Automatic	7-1/2° BTC*	7-1/2° BTC**
Manual	TDC**	TDC***
Power Pack	5° BTC**	5° BTC***
CYLINDER NUMBERING (front to rear)		
Left Bank	1-3-5-7	1-3-5-7
Right Bank	2-4-6-8	2-4-6-8
CYLINDER BLOCK		
Cylinder Bore (standard)	4.2495"-4.2515"	4.320-4.322"
Cylinder Bore Out-of-Round (Max. allowable before reconditioning)	.005"	.005"
Cylinder Bore Taper (Max. allowable before reconditioning)	.010"	.010"
Reconditioning Working Limits (for taper and out-of-round)	.001"	.001"
Maximum Allowable Oversize (cylinder bore)	.040"	.040"
Tappet Bore Diameter	.9050"-.9058"	.9050"-9058"
Distributor Lower Drive Shaft Bushing (press fit in block)	.0005"-.0040"	.0005"-.0040"
Ream to	.4865"-.4880"	.4865"-.4880"
Shaft to Bushing Clearance	.0007"-.0027"	.0007"-.0027"
PISTONS		
Type Material	Autothermic W/Steel Struts	Autothermic W/Steel Struts

* 2 BBl. Carb.
** 4 BBl. Carb.
*** High Performance

	"383"	"440"
Land Clearance (diametrical)	.021"-.029"	.023"—.030"
Clearance at Top of Skirt	.0003"-.0013"	.0003"—.0013"
Weight (Std. through .040" oversize)	770 gms.	857.5 gms.
Piston Length (overall)	3.874"	3.650"
Ring Groove Depth		
No. 1	.220"	.220"
No. 2	.220"	.220"
No. 3	.208"	.208"
Pistons for Service	Std. .005", .020", .040" Oversize	Std. .005", 020", .040" Oversize
PISTON PINS		
Type	Press Fit in Rod	Press Fit in Rod
Diameter	1.0935"-1.0937"	1.0935"-1.0937"
Length	3.555"-3.575"	3.555"-3.575"
Clearance in Piston (Light Thumb Push @ 70°F.)	.00045"-.00075"	.00045"-.00075"
Interference in Rod	.0007"-.0012"	.0007"-.0012"
Pins for Service	Standard Only	Standard Only
PISTON RINGS		
Number of Rings per Piston	3	3
Compression	2	2
Oil	1	1
Oil Ring Type	3-piece Chrome-plated rails with Stainless steel expander-spacer	3-piece Chrome-plated rails with Stainless steel expander-spacer
Ring width		
Compression	.0775"-.0780"	.0775"-.0780"
Oil (Steel rails)	.025"	.025"
Ring Gap		
Compression	.013"-.023"	.013"-.023"
Oil (Steel rails)	.015-.055"	.015-.055"
Ring Side Clearance		
Compression	.0015"-.0030"	.0015"-.0030"
Oil (Steel rails)	.0000"-.005"	.0000"-.005"
Service Rings		
Ring Gap		
Compression	.013"-.023"	.013"-.023"
Oil (Steel rails)	.015"-.062"	.015-.062"
Ring Side Clearance		
Compression	.0015"-.004"	.0015"-.004"
Oil (Steel rails)	.0000"-.005"	.0000"-.005"
CONNECTING RODS		
Length (Center to Center)	6.356"-6.360"	6.766"-6.770"
Weight (less bearing shells)	812 ± 4 gms.	846 ± 4 gms.
Side Clearance (two rods)	.009"-.017"	.009"-.017"
Piston Pin Bore Diameter	1.0923"-1.0928"	1.0923"-1.0928"
CONNECTING ROD BUSHING		
Type	None	None
CONNECTING ROD BEARINGS (Type) 2 BBL. Carb.	Steel Backed Babbitt	—
4 BBL. Carb.	Tri-metal Steel Backed	Tri-metal Steel Backed
Diameter and Width	2.376"-.927"	2.376"-.927"
Clearance desired 2 BBL. Carb.	.0005"-.0015"	—
4 BBL. Carb.	.001"-.002"	.001"-.002"
Maximum Allowable	.0025"	.0025"
Bearings for Service	Std., .001", .002", .003", .010", .012"	Std., .001", .002", .003", .010", .012"
CRANKSHAFT		
Type	Fully Counter-Balanced	Fully Counter-Balanced
Bearings	Steel Backed Babbitt	Steel Backed Babbitt
Thrust Taken By	No. 3 Main Bearing	No. 3 Main Bearing
End Play	.002"-.007"	.002"-.007"
Maximum Allowable	.010"	.010"
Diametral Clearance Desired	.0005"-.0015"	.0005"-.0015"
Diametral Clearance Allowed	.0025"	.0025"
Finish at Rear Oil Seal Surface	Diagonal Knurling	Diagonal Knurling

		"383"	"440"
MAIN BEARING JOURNALS			
Diameter		2.6245"-2.6255"	2.7495"-2.7505"
Maximum Allowable Out-of-Round and/or Taper		.001"	.001"
Bearings for Service Available in Standard and the following undersizes		.001", .002", .003", .010", .011", .012"	.001", .002", .003", .010", .011", .012"
CONNECTING ROD JOURNALS			
Diameter		2.374"-2.375"	2.374"-2.375"
Maximum Allowable Out-of-Round and/or Taper		.001"	.001"
CAMSHAFT			
Drive		Chain	Chain
Bearings		Steel Backed Babbitt	Steel Backed Babbitt
Number		5	5
Diametral Clearance		.001"-.003"	.001"-.003"
Maximum Allowable before Reconditioning		.005"	.005"
Thrust Taken By		Cylinder Block	Cylinder Block
CAMSHAFT JOURNALS			
Diameter	No. 1	1.998"-1.999"	1.998"-1.999"
	No. 2	1.982"-1.983"	1.982"-1.983"
	No. 3	1.967"-1.968"	1.967"-1.968"
	No. 4	1.951"-1.952"	1.951"-1.952"
	No. 5	1.748"-1.749"	1.748"-1.749"
CAMSHAFT BEARINGS			
Diameter	No. 1	2.000"-2.001"	2.000"-2.001"
	No. 2	1.984"-1.985"	1.984"-1.985"
	No. 3	1.969"-1.970"	1.969"-1.970"
	No. 4	1.953"-1.954"	1.953"-1.954"
	No. 5	1.750"-1.751"	1.750"-1.751"
VALVE TIMING		Barracuda Road Runner	Without Power Pack / Power Pack
Intake Opens (BTC)		18° 21°	18° 21°
Intake Closes (ABC)		58° 67°	58° 67°
Exhaust Opens (BBC)		66° 79°	66° 79°
Exhaust Closes (ATC)		14° 25°	14° 25°
Valve Overlap		32° 46°	32° 46°
Intake Valve Duration		256° 268°	256° 268°
Exhaust Valve Duration		260° 284°	260° 284°
TIMING CHAIN			
Number of Links		50	50
Pitch		.50"	.50"
Width		.75"	.75"
TAPPETS			
Type		Hydraulic	Hydraulic
Body Diameter		.9040"-.9045"	.9040"-.9045"
Clearance in Block		.0005"-.0018"	.0005"-.0018"
Service Tappets Available		Std., .001", .008", .030"	Std., .001", .008", .030"
Clearance Between Valve Stem and Rocker Arm Pad (Dry Lash)		.060"-.210"	.060"-.210"
CYLINDER HEAD			
Valve Seat Run-Out (Maximum)		.002"	.002"
Intake Valve Seat Angle		45°	45°
Seat Width (finish)		.060"-.085"	.060"-.085"
Exhaust Valve Seat Angle		45°	45°
Seat Width (finish)		.040"-.060"	.040"-.060"
Cylinder Head Gasket (Thickness compressed)		.021"	.021"
VALVE GUIDES			
Type		Cast in Head	Cast in Head
Guide Bore Diameter		.374"-.375" Std.	.374"-.375" Std.
VALVES—(INTAKE)			
Head Diameter		2.08"	2.08"
Length (to center of valve face)		4.87"	4.87"
Stem Diameter (Standard)		.372"-.373"	.372"-.373"
Stem to Guide Clearance		.001"-.003"	.001"-.003"
Maximum Allowable		.017"***	.017"***
Face Angle		45°	45°

	"383"	"440"
Valve for Service (Oversize Stem Diam.)	Std., .005", .015", .030"	Std., .005", .015", .030"
Lift (Zero Lash)	.425"△ .450"△△	.425"* .450"**
VALVES—(EXHAUST)		
Head Diameter	1.75"	1.75"
Length to (center of valve face)	4.87"	4.87"
Stem Diameter (Standard)	.371"-.372"	.371"-.372"
Stem to Guide Clearance	.002"-.004"	.002"-.004"
Maximum Allowable	.017"***	.017"***
Face Angle	45°	45°
Valve for Service (Oversize Stem Diam.)	Std., .005", .015", .030"	Std., .005", .015", .030"
Lift (Zero Lash)	.435"△ .458"△△	.435"* .458"**
VALVE SPRINGS		
Number	16	16
Free Length	2.58"△ 2.23"△△	2.58"* 2.23"**
Load when Compressed to (valve closed damper removed)	121-129 @ 1-55/64"△ 100-110 @ 1-55/64"△△	121-129 @ 1-55/64"* 100-110 lbs. @ 1-55/64"**
Load when Compressed to (valve open damper removed)	192-208 @ 1-7/16"△ 236-256 @ 1-23/64"△△	192-208 @ 1-7/16"* 236-256 lbs. @ 1-23/64"**
Valve Springs I.D.	1.010"-1.030"△ 1.070"-1.090"△△	1.010"-1.030"* 1.070"-1.090"**
Maximum Allowable Out of Plumb	1/16"	1/16"
Valve Spring Installed Height (spring seat to retainer)	1-53/64"-1-57/64"	1-53/64"-1-57/64"
Use 1/16" Spacer to Reduce Spring Height when Over Specifications		
ENGINE LUBRICATION		
Pump Type	Rotary Full Pressure	Rotary Full Pressure
Capacity (qts.)	4 U.S. or 3-1/4 Imperial***	4 U.S. or 3-1/4 Imperial***
Pump Drive	Camshaft	Camshaft
Minimum Pump Pressure @ 500 R.P.M.	20 PSI	20 PSI
Operating Pressure at 1000 R.P.M.	45-65 lbs.	45-65 lbs.
Pressure Drop Resulting from Clogged Filter	7-9 lbs.	7-9 lbs.
Oil Filter Type	Full-Flow	Full-Flow

* Without Power Pack
** With Power Pack
*** With tools C-3973 & C-3339 using wobble method

△With 2 Barrel Carburetor
△△Barracuda-Road Runner

OIL PUMP—INSPECTION LIMITS FOR REPLACEMENT

	383 and 440 Cu. In. Engines
Oil Pump Cover	.0015 inch or more
Outer Rotor Length	.943 inch or less
Outer Rotor Diameter	2.469 inch or less
Inner Rotor Length	.942 inch or less
Clearance Over Rotors—Outer	.004 inch or more
Inner	.005 inch or more
Outer Rotor Clearance	.012 inch or more
Tip Clearance Between Rotors	.010 inch or more

OVERSIZE AND UNDERSIZE ENGINE COMPONENT MARKINGS

Displacement	Condition	Identification	Location of Identification
383 cu. in. 440 cu. in.	.001" U/S Crankshaft	Maltese Cross M-2-3 etc. (indicating No. 2 & 3 main bearing journal) and/or R-1-4 etc. (indicating No. 1 & 4 connecting rod journals)	Top pad—Front of engine Crankshaft counterweight
	.010" U/S Crankshaft	Maltese Cross and X M-10 (indicates .010" U/S all main journals) and/or R-10 (indicates .010" U/S all rod journals)	Top pad—Front of engine Crankshaft counterweight
	.020" O/S Cylinder Bores	A	Top pad—Front of engine
	.008" O/S Tappets	♦	Top pad—Front of engine
	.005" O/S Valve Stems	O.S.	Single bolt boss on end of the head

ENGINE	
Type	Hemispherical 90°V
Number of Cylinders	8
Bore	4.25"
Stroke	3.750"
Piston Displacement	426 Cu. In.
Compression Ratio	10.25 to 1
Compression Pressure with engine warm, spark plugs removed—wide open throttle	150-205 psi
Maximum Variation between Cylinders (any one engine)	30 psi
Firing Order	1-8-4-3-6-5-7-2
Basic Timing	T.D.C.
CYLINDER NUMBERING (front to rear)	
Left Bank	1-3-5-7
Right Bank	2-4-6-8
CYLINDER BLOCK	
Cylinder Bore (standard) "A" Size	4.24975"
"B" Size	4.25025"
"C" Size	4.25075"
"D" Size	4.25125"
"E" Size	4.25175"
Cylinder Bore Out-of-Round (Max. allowable before reconditioning)	.005"
Cylinder Bore Taper (Max. allowable before reconditioning)	.010"
Reconditioning Working Limits (for taper and out-of-round)	.001"
Maximum Allowable Oversize (cylinder bore)	.040"
Tappet Bore Diameter	.9050"-.9058"
Distributor Lower Drive Shaft Bushing (press fit in block)	.0015"-.0040" (Interference)
Ream to	.4865"-.4880"
Shaft to Bushing Clearance	.0007"-.0027"
PISTONS	
Type Material	Forged Aluminum (Tin Plated)
Land Clearance (diametrical)	.033"-.041"
Clearance at Top of Skirt	.0025"-.0035"
Weight (Std. through .040" oversize)	841-845 gms.
Piston Length (overall)	4.060
Ring Groove Depth	
No. 1	.220"
No. 2	.220"
No. 3	.186"

Pistons for Service	Std., .005", .020", .040" Oversize
PISTON PINS	
Type	Full Floating
Diameter	1.0310"-1.0312"
Length	3.395"-3.405"
Weight	204 gms.
Clearance in Piston (Tight Thumb Push @ 70°F.)	.0001"-.0006"
End Play	.006"-.012"
Clearance in Rod	.0002"-.0007"
Pins for Service	Std. .003", .008" Oversize
PISTON RINGS	
Number of Rings per Piston	3
Compression	2
Oil	1
Oil Ring Type	3-piece Chrome-Plated Rails with Stainless Steel Expander-Spacer
Ring Width	
Compression	.0775"-.0780"
Oil (Steel Rails)	.025"
Ring Gap	
Compression	.013"-.023"
Oil (Steel Rails)	.015"-.055"
Ring Side Clearance	
Compression	.0015"-.0030"
Oil (Steel Rails)	.0002"-.005"
Service Rings	
Ring Gap	
Compression	.013"-.023"
Oil (Steel Rails)	.015"-.062"
Ring Side Clearance	
Compression	.0010"-.003"
Oil (Steel Rails)	.0002"-.005"
CONNECTING RODS	
Length (center to center)	6.859"-6.863"
Large End Weight	770 gms. ± 2 gms.
Small End Weight	314 gms. ± 2 gms.
Side Clearance (two rods)	.009"-.017"
Piston Pin Bushing Bore Diameter	1.0314"-1.0317"
CONNECTING ROD BUSHING	
Type	Steel Backed Bronze
CONNECTING ROD BEARINGS	
Type	Tri-metal Steel Backed
Diameter and Width	2.376" x .927"
Clearance Desired	.0015"-.0025"
Maximum Allowable	.0025"
Bearings for Service	Std. .0005", .001", .002", .003", .010", .011", .012"
CRANKSHAFT	
Type	Fully Counter-Balanced
Bearings	Tri-metal Steel Backed
Thrust Taken By	No. 3 Main Bearing
End Play	.002"-.007"
Maximum Allowable	.010"
Clearance Desired	.0015"-.0025"
Clearance Allowed	.0025"
Finish at Rear Oil Seal Surface	Diagonal Knurling
MAIN BEARING JOURNALS	
Diameter	2.7495"-2.7505"
Maximum Allowable Out-of-Round	.0003"
Maximum Allowable Taper	.0005"
Bearings for Service Available in Standard and the following undersizes	.001", .002", .003", .010", .011", .012"
CONNECTING ROD JOURNALS	
Diameter	2.374"-2.375"
Maximum Allowable Out-of-Round	.0003"

Maximum Allowable Taper	.0005"
CAMSHAFT	
Drive	Roller Chain
Bearings	Steel Backed Bronze
Number	5
Clearance Desired	.001"-.003"
Maximum Allowable before reconditioning	.005"
Thrust Taken By	Cylinder Block
CAMSHAFT JOURNALS	
Diameter	
No. 1	1.998"-1.999"
No. 2	1.982"-1.983"
No. 3	1.967"-1.968"
No. 4	1.951"-1.952"
No. 5	1.748"-1.749"
CAMSHAFT BEARINGS	
Diameter	
No. 1	2.000"-2.001"
No. 2	1.984"-1.985"
No. 3	1.969"-1.970"
No. 4	1.953"-1.954"
No. 5	1.750"-1.751"
VALVE TIMING	
Intake Opens (BTC)	36°
Intake Closes (ABC)	68°
Exhaust Opens (BBC)	80°
Exhaust Closes (ATC)	24°
Valve Overlap	60°
Intake Valve Duration	284°
Exhaust Valve Duration	284°
TIMING CHAIN	
Type	Double Roller
Pitch	3/8"
Width	.860"
TAPPETS	
Type	Mechanical
Body Diameter	.9035"-.9040"
Clearance in Block	.0005"-.0018"
Service Tappets Available	Std., .001", .008", .030"
Operating Clearance	
Intake	.028" Cold
Exhaust	.032" Cold
CYLINDER HEAD	
Valve Seat Runout (Maximum)	.002"
Intake Valve Seat Angle	45°
Seat Width (Finish)	.060"-.085"
Exhaust Valve Seat Angle	45°
Seat Width (Finish)	.050"
Cylinder Head Gasket (thickness compressed)	.025"
Combustion Chamber Volumes (with valves and plugs)	171.7-173.7 c.c.
VALVE GUIDES	
Type	Cast in Head
Guide Bore Diameter	.3115"-.3125" Std.
VALVES—(Intake)	
Head Diameter	2.250"
Length (to center of valve face)	5.316"-5.331"
Stem Diameter (Standard)	.3085"-.3095"
Stem to Guide Clearance	.002"-.004"
Maximum Allowable	.017"*
Face Angle	45°
Valve for Service	Std., .005", .015", .030" Oversize Stem Diam.
Lift (Zero Lash)	.467"
VALVES—(Exhaust)	
Head Diameter	1.940"
Length to (center of valve face)	4.7543"-4.7693"
Stem Diameter (Standard)	.3075"-.3085"

Stem to Guide Clearance	.003"-.005"
Maximum Allowable	.017"*
Face Angle	45°
Valve for Service	Std., .005", .015", .030" Oversize Stem Diam.
Lift (Zero Lash)	.473"
VALVE SPRINGS	
Number	16
Free Length	2.20"
Load when Compressed to (valve closed less surge damper)	110-120 @ 1-55/64"
Load when Compressed to (valve open less surge damper)	270-290 @ 1-3/8"
Valve Springs I.D.	1.070"-1.090"
Maximum Allowable Out of Plumb	1/16"
Valve Spring Installed Height (spring seat to retainer)	1-53/64"-1-57/64"

Use 1/16" spacer to reduce spring height when over specifications.

ROCKER SHAFT ASSEMBLY	
Rocker Shaft Clearance in Rocker Arm	.0007"-.0012"
Rocker Shaft Clearance in Bracket	.0009"-.0026"
ENGINE LUBRICATION	
Pump Type	Rotary Full Pressure
Capacity (qts.)	6 U.S. or 5 Imperial**
Pump Drive	Camshaft
Minimum Pump Pressure @ 500 rpm.	15 psi.
Operating Pressure at 1000 rpm.	45-65 lbs.
Pressure Drop Resulting from Clogged Filter	7-9 lbs.
Oil Filter Type	Full-Flow

*With Tools C-3973 and C-3339 using wobble method.

** When Filter Element is Replaced, Add 1 U.S. Quart or 3/4 Imperial Quart.

OIL PUMP—INSPECTION LIMITS FOR REPLACEMENT

Oil Pump Cover	.0015 inch or more
Outer Rotor Length	.943 inch or less
Outer Rotor Diameter	2.469 inch or less
Inner Rotor Length	.942 inch or less
Clearance Over Rotors—Outer	.004 inch or more
Inner	.005 inch or more
Outer Rotor Clearance	.012 inch or more
Tip Clearance Between Rotors	.010 inch or more

FOR IDENTIFICATION ENGINES WILL BE STAMPED ON CYLINDER BLOCK BOSS AS SHOWN BELOW

EXAMPLE

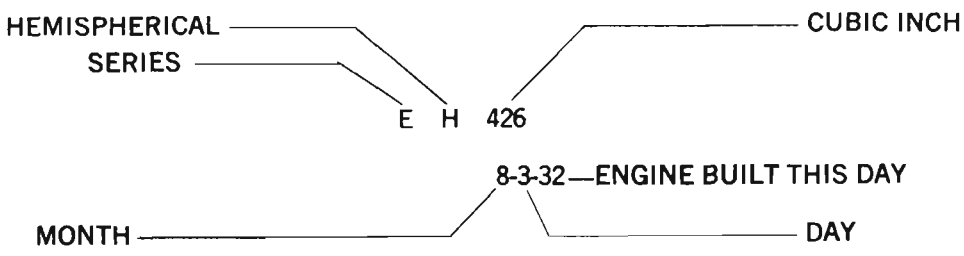

OVERSIZE AND UNDERSIZE ENGINE COMPONENT MARKINGS

Condition	Identification	Location of Identification
.001" U/S Crankshaft	Maltese Cross M-2-3 etc. (indicating No. 2 & 3 main bearing journal) and/or R-1-4 etc. (indicating No. 1 & 4 connecting rod journals)	Top pad—Front of engine Crankshaft counterweight
.010" U/S Crankshaft	Maltese Cross and X M-10 (indicates .010" U/S all main journals) and/or R-10 (indicates .010" U/S all rod journals)	Top pad—Front of engine Crankshaft counterweight
.020" O/S Cylinder Bores	A	Top pad—Front of engine
.008" O/S Tappets	♦	Top pad—Front of engine
.005" O/S Valve Stems	O.S.	Single bolt boss on end of the head

TIGHTENING REFERENCE

170-225 CUBIC INCH ENGINES

	Torque Foot-Pounds	Thread Size
Connecting Rod Nut	45	3/8-24
Cylinder Head Bolt	65	7/16-14
Main Bearing Cap Bolt	85	1/2-13
Spark Plug	30	14mm
Camshaft Lockbolt	35	7/16-14
Carburetor to Manifold Nut	30	3/8-16
Chain Case Cover Bolt	200 in.-lbs.	5/16-18
Torque Converter Housing Bolt	30	3/8-16
Converter Brace to Aluminum Housing	40	9/16-14
Converter Brace to Engine Block	30	3/8-16
Clutch Housing Bolt	30	3/8-16
Crankshaft Rear Bearing Seal Retainer	30	3/8-16
Cylinder Head Cover Bolt	40 in.-lbs.	1/4-20
Distributor Clamp Bolt	200 in.-lbs.	5/16-18
Engine Front Mounting to Frame Nut	85	1/2-20
Engine Front Mounting to Block Nut	45	7/16-20
Engine Rear Mount Bolts	35	7/16-14 3/8-24
Exhaust Manifold Nut	10	5/16-24
Exhaust Pipe Flange Nut	30	7/16-20
Exhaust Pipe Clamp Bolt	20	3/8-24
Exhaust Pipe Support Clamp Bolt	20	3/8-24
Fan Attaching Bolt	200 in.-lbs.	5/16-18
Flywheel to Crankshaft	55	7/16-20
Flex Plate to Crankshaft	55	7/16-20
Flex Plate to Converter	270 in.-lbs.	5/16-24
Flywheel Housing to Cylinder Block Bolt	50	7/16-14
Flywheel Housing Cover Bolt	7	1/4-20
Fuel Pump Attaching Bolt	30	3/8-16
Alternator Bracket Bolt	30	3/8-16
Alternator Mounting Nut	200 in.-lbs.	5/16-18
Alternator Adjusting Strap Bolt	15	5/16-18
Alternator Adjusting Strap Mounting Bolt	30	3/8-16
Intake to Exhaust Manifold Bolt	200 in.-lbs.	5/16-18
Manifold Heat Control Counterweight Bolt	50 in.-lbs.	10-32
Oil Pan Drain Plug	20	1/2-20
Oil Pan Bolt	200 in.-lbs.	5/16-18
Oil Pump Cover Bolt	95 in.-lbs.	1/4-20
Oil Pump Attaching Bolt	200 in.-lbs.	5/16-18
Oil Filter Attaching Stud	30	3/4-16
Oil Pressure Gauge Sending Unit	60 in.-lbs.	1/8 N.P.T.F.

Rocker Shaft Bracket Bolt	30	3/8-16
Starter Mounting Bolt	50	7/16-14
Temperature Gauge Sending Unit	180 in.-lbs.	1/4 N.P.T.F.
Water Pump to Housing Bolt	30	3/8-16

273-318-340 CUBIC INCH ENGINES

Connecting Rod Nut—Plain	45	3/8-24
Cylinder Head Bolt (273-318 Cubic Inch)	85	1/2-13
(340 Cubic Inch)	95	1/2/13
Main Bearing Cap	85	1/2-13
Camshaft Lockbolt	35	7/16-14
Camshaft Thrust Plate	210 in.-lbs.	5/16-18
Chain Case Cover (Cast)	30	3/8-16
Clutch Housing Bolt	30	3/8-16
Clutch Housing Vent Hole	100 in.-lbs.	1/4-20
Clutch Housing Pan Drain Plug	35	
Crankshaft Bolt (Vibration Damper)	135	3/4-16
Cylinder Head Cover	40 in.-lbs.	1/4-20
Flywheel to Crankshaft	55	7/16-20
Flex Plate to Crankshaft	55	7/16-20
Flex Plate to Converter	270 in.-lbs.	5/16-24
Flywheel Housing to Cylinder Block	50	
Flywheel Housing Cover	100 in.-lbs.	1/4-20
Intake Manifold	35	3/8-16
Oil Pan Drain Plug	20	1/2-20
Oil Pan Bolt	15	5/16-18
Oil Pump Cover Bolt	95 in.-lbs.	1/4-20
Oil Pump Attaching Bolt	35	3/8-16
Rocker Shaft Bracket Bolt	30	3/8-16
Spark Plug	30	14mm
Vibration Damper Pulley Bolts	200 in.-lbs.	5/16-24
Water Pump	30	3/8-16

383, 440 CUBIC INCH ENGINES

Connecting Rod Nut—Plain	45	3/8-24
Cylinder Head Bolt	70	7/16-14
Main Bearing Cap Bolt	85	1/2-13
Spark Plug	30	14mm
Camshaft Lockbolt	35	7/16-14
Carburetor to Manifold Nut	7	5/16-24
Chain Case Cover Bolt	15	5/16-18
Torque Converter Housing Bolt	30	3/8-16
Clutch Housing Bolt	30	3/8-16
Crankshaft Rear Bearing Seal Retainer	30	3/8-16
Crankshaft Bolt (Vibration Damper)	135	3/4-16
Cylinder Head Cover Stud and Nut	40 in.-lbs.	1/4-28
Distributor Clamp Bolt	15	5/16-18
Exhaust Manifold Nut	30	3/8-24
Exhaust Pipe Flange Nut	50	7/16-20
Exhaust Pipe Clamp Bolt	20	3/8-24
Exhaust Pipe Support Clamp Bolt	20	3/8-24
Fan Attaching Bolt	15-18	5/16-18
Flywheel to Crankshaft	55	7/16-20
Flex Plate to Crankshaft	55	7/16-20
Flex Plate to Converter	270 in.-lbs.	5/16-24
Fan Belt Idler Pulley Nut	45	7/16-20
Fan Belt Idler Pulley Bracket Bolt	30	3/8-16
Flywheel Housing to Cylinder Block Bolt	50	7/16-14
Flywheel Cover Bolt	7	1/4-20
Fuel Pump Attaching Bolt	30	3/8-16
Alternator Mounting Bolt	30	3/8-16
Alternator Adjusting Strap Bolt	200 in.-lbs.	5/16-18
Alternator Adjusting Strap Mounting Bolt	30	3/8-16
Intake Manifold Bolt	40	3/8-16
Manifold Heat Control Counterweight Bolt	50 in.-lbs.	10-32

Oil Pan Drain Plug	20	1/2-20
Oil Pan Bolt	15	5/16-18
Oil Pump Cover Bolt	10	5/16-18
Oil Pump Attaching Bolt	35	3/8-16
Rocker Shaft Bracket Bolt	25	3/8-16
Starter Mounting Bolt	50	7/16-14
Vibration Damper Pulley Bolts	200 in.-lbs.	5/16-18
Valve Tappet Cover End Bolt	9	1/4-20
Water Pump to Housing Bolt	30	3/8-16
Water Pump Housing to Cylinder Block Bolt	30	3/8-16
A/C Compressor to Engine Bolt	30	3/8-16

426-HEMI ENGINE

Alternator Attaching Bolt	30	3/8-16
Alternator Adjusting Strap Bolt	15	5/16-18
Alternator Bracket Bolt	30	3/8-16
Camshaft Sprocket Cap Screw (3)	40	3/8-16
Carburetor to Manifold Nut	7	5/16-24
Chain Case Cover Bolt, Upper	15-18	5/16-18
Lower	15-18	3/8-16
Connecting Rod Nut	75	7/16-20
Crankshaft Bolt (Vibration Damper)	135	3/4-16
Crankshaft Rear Bearing Seal Retainer Bolt	30	3/8-16
Cylinder Head Bolt	70-75	7/16-14
Cylinder Head Stud Nut	70-75	7/16-20
Cylinder Head Cover	40 In. Lbs.	1/4-28
Distributor Clamp Bolt	200 In. Lbs.	5/16-18
Exhaust Manifold Bolt	35	3/8-16
Fan Attaching Bolt (4)	15	5/16-18
Flywheel Cap Screw	70	7/16-20
Clutch Cover to Flywheel	30	3/8-16
Flywheel Pan Screws	200 In. Lbs.	5/16-18
Flywheel Housing to Block Bolts	30	3/8-16
	50	7/16-14
Fuel Pump Attaching Bolt	30	3/8-16
Intake Manifold	See Figure 9	1/4-20
Main Bearing Cap Bolt	100	1/2-13
Main Bearing Cap Tie Bolt	45	3/8-16
Oil Pan Bolt	15	5/16-18
Oil Pan Drain Plug	20	1/2-20
Oil Pump Attaching Bolt	30	3/8-16
Oil Pump Cover Bolt	10	5/16-18
Rocker Shaft Bracket Bolt	30	3/8-16
Spark Plug	30	14MM
Starter Mounting Bolt	50	7/16-14
Torque Converter to Flex Plate Bolt	65	7/16-20
Water Pump to Housing Bolt	30	3/8-16
Water Pump to Cylinder Block Bolt	30	3/8-16

EXHAUST SYSTEM AND INTAKE MANIFOLD

CONTENTS

	Page
ANTI-ICING TUBE	18
EXHAUST HEADERS (426 Hemi Engine)	13
EXHAUST HEADER HEAT CONTROL VALVE (426 Hemi Engine)	17
EXHAUST MANIFOLD (273, 318, 340 Cu. In. Engines)	11
EXHAUST MANIFOLD (383, 440 Cu. In. Engines)	12
EXHAUST PIPES, MUFFLERS AND TAIL PIPES	2
GENERAL INFORMATION	1
INTAKE AND EXHAUST MANIFOLD Assembly (6-Cyl. Engines)	9
INTAKE MANIFOLD (273, 318, 340 Cu. In. Engine)	11
INTAKE MANIFOLD (383, 440 Cu. In. Engines)	12
INTAKE MANIFOLD (426 Hemi Engine)	12
INTAKE MANIFOLD HEAT TUBES (426 Hemi Engine)	12
MANIFOLD HEAT CONTROL VALVE	
6 Cylinder Engine	14
273 Cubic Inch Engine	14
318 Cubic Inch Engine	14
340 Cubic Inch Engine	15
383-440 Cubic Inch Engine	16
426 Hemi Engine	17
MANIFOLD HEAT CONTROL VALVE REPLACEMENT (Except 273-318-340)	17
SERVICE DIAGNOSIS	2
SERVICE PROCEDURES	2
TIGHTENING REFERENCE	19

GENERAL INFORMATION

Exhaust Pipes, Mufflers and Tail Pipes

The single line exhaust systems (Figs. 1, 2, 4, 5, 6, 9, 10 and 11) use mufflers made of aluminized steel components. Dual exhaust systems (Figs. 3, 7, 8 and 12) use mufflers made of aluminized and stainless steel components. The 426 Hemi has in addition to the regular muffler, an aluminized and stainless steel resonator (Fig. 8). The tail pipes on all models are made of aluminized steel.

Barracuda models equipped with the 340 and 383 cubic inch engine and Belvedere models with 440 cubic inch Power Pak engine and 426 Hemi engine use a chrome plated extension clamped to the ends of the tail pipes (Figs. 3 and 8).

The single line exhaust systems used on models with 6-cylinder engines use an integral exhaust pipe and muffler (Figs. 1, 4 and 9). Single line exhaust systems with V-8 engines; (except Fury 383 cubic inch engine with dual throat carburetor (Fig. 11), use a U-bolt and saddle clamping arrangement to secure the exhaust pipe and exhaust pipe extension (Figs. 2, 5, 6 and 10).

Ball joint connections are used at the junctures of the exhaust manifolds and exhaust pipes on models equipped with the 273 and 318 cubic inch engines (Fig. 5). No gaskets are used at the ball joint connections. All other V-8 and 6-cylinder engines use a gasket between the exhaust manifolds and pipe flanges. Ball joint connections are used between the exhaust pipes and pipe extensions on Fury models with 383 and 440 cubic inch engines (Figs. 11 and 12) to facilitate installation and alignment of the system.

Flexible "C" type supports are used at the rear of the mufflers on all Valiant and Belvedere models, except 426 Hemi and 440 cubic inch engines.

The single and dual exhaust systems on Fury models are suspended from the shock absorber crossmember brackets at the top of the tail pipe kick-up by flexible, double loop supports. A U-bolt and saddle clamping arrangement secures the tail pipe to the muffler outlet extension.

Tail pipes with flexible "L" type hangers are used on all models except Barracuda 340 and 383 cubic inch engines, GTX and Road Runner with 426 and 440 cubic inch engines these models are equipped with the metal blade and rubber block type support.

Manifold Heat Control Valve

A thermostatic heat control valve is incorporated in the left hand exhaust manifold on six cylinder models (Fig. 18). On all V-8 models, a similar valve is located in the right hand manifold.

On all V-8 Models, except those equipped with the 426 Hemi engine, the valves direct exhaust gases to the heat chamber beneath the carburetor mounting flange in the intake manifold to help vaporize the fuel mixture during the warm-up period.

On the 426 Hemi engine, a heat tube arrangement incorporated with the exhaust header thermostatic heat control valve (Fig. 17) diverts the hot exhaust gases to a heat chamber in the intake manifold at the base of the rear carburetor during the warm-up

period. These tubes are made of aluminized steel to resist corrosion.

When the valve is closed, the exhaust gases are diverted to the heat chamber through the right hand tube (Fig. 17). After circulating through the heat chamber, the gases are returned to the exhaust pipe through the left hand tube.

SERVICE DIAGNOSIS

Condition	Possible Cause	Correction
EXCESSIVE EXHAUST NOISE	(a) Leaks at pipe joints.	(a) Tighten clamps at leaking joints.
	(b) Burned or blown out muffler.	(b) Replace muffler assembly.
	(c) Burned or rusted out exhaust pipe.	(c) Replace exhaust pipe.
	(d) Exhaust pipe leaking at manifold flange.	(d) On 273 and 318 cu. in. engines, tighten ball joint connection attaching bolt nuts to 25 foot-pounds. On 426 Hemi engines, tighten the nuts to 24 foot-pounds. On all other engines, install a new gasket and tighten flange bolt nuts to 35 foot-pounds.
	(e) Exhaust manifold cracked or broken.	(e) Replace manifold.
	(f) Leak between manifold and cylinder head.	(f) Tighten manifold to cylinder head stud nuts or bolts to specifications.
	(g) Leaks at heat tube pipe connections.	(g) Replace gaskets as required. Tighten bolts and nuts and clamp bolt nut to specifications.
LEAKING EXHAUST GASES	(a) Leaks at pipe joints.	(a) Tighten U-bolt nuts at leaking joints to 150 inch-pounds.
	(b) Damaged or improperly installed gaskets.	(b) Replace gaskets as necessary.
	(c) Restriction in muffler or tail pipe.	(c) Remove restriction, if possible, or replace as necessary.
	(d) Loose heat tube connections.	(d) Replace gaskets as required. Tighten stud nuts or bolts to specifications.
	(e) Burned or rusted out heat tubes.	(e) Replace heat tubes as required.
ENGINE HARD TO WARM UP OR WILL NOT RETURN TO NORMAL IDLE	(a) Heat control valve frozen in the open position.	(a) Free up manifold heat control valve using a suitable solvent.
NOISE IN MANIFOLD	(a) Thermostat broken.	(a) Replace thermostat.
	(b) Weak, broken or missing anti-rattle spring.	(b) Replace spring.
MANIFOLD HEAT CONTROL VALVE RATTLE	(a) Thermostat broken.	(a) Replace thermostat.
	(b) Broken, weak or missing anti-rattle spring.	(b) Replace spring.

SERVICE PROCEDURES

EXHAUST PIPES, MUFFLERS AND TAIL PIPES

Removal

(1) Raise vehicle on hoist and apply penetrating oil to all clamp bolts and nuts to loosen rust and corrosion. **If only the muffler is to be replaced, cut the extension pipe just forward of the muffler with a hack saw or cutter. It is not necessary to remove the exhaust pipe. The replacement muffler can be installed, using a U-bolt and saddle clamping arrangement at the front of the muffler.**

(2) Remove clamps and supports from exhaust pipe, muffler and tail pipe (Figs. 1, 2, 3, 4, 5, 6, 7, 8, 9, 10, 11 and 12).

(3) Disconnect exhaust pipe at exhaust manifolds and remove exhaust pipe. On models using gaskets at exhaust pipe flanges, discard gaskets and carefully clean manifold flanges of any gasket particles.

On models with the 426 Hemi engine, also remove heat tube clamp bolt, nut, clamp and heat tube from exhaust pipe connection (Fig. 17).

(4) Remove muffler and extension pipe assembly.

(5) Raise rear end of vehicle to relieve body weight from rear springs and remove tail pipe.

Removal—GTX and 426 Hemi Models

To remove the exhaust system, follow the same in-

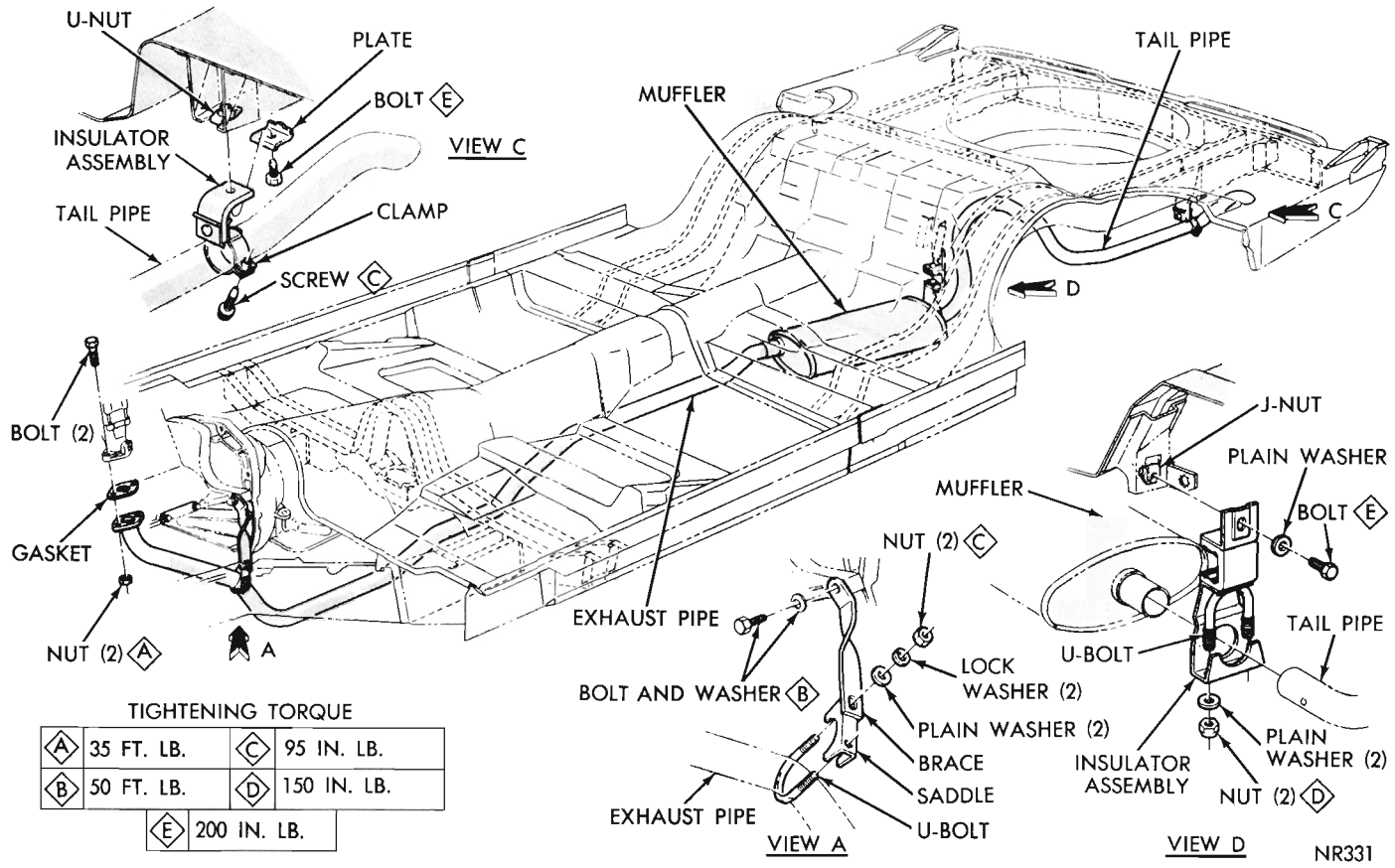

TIGHTENING TORQUE

(A)	35 FT. LB.	(C)	95 IN. LB.
(B)	50 FT. LB.	(D)	150 IN. LB.
(E)	200 IN. LB.		

Fig. 1—Exhaust System (Valiant-170, 225 Cu. In. Engines)

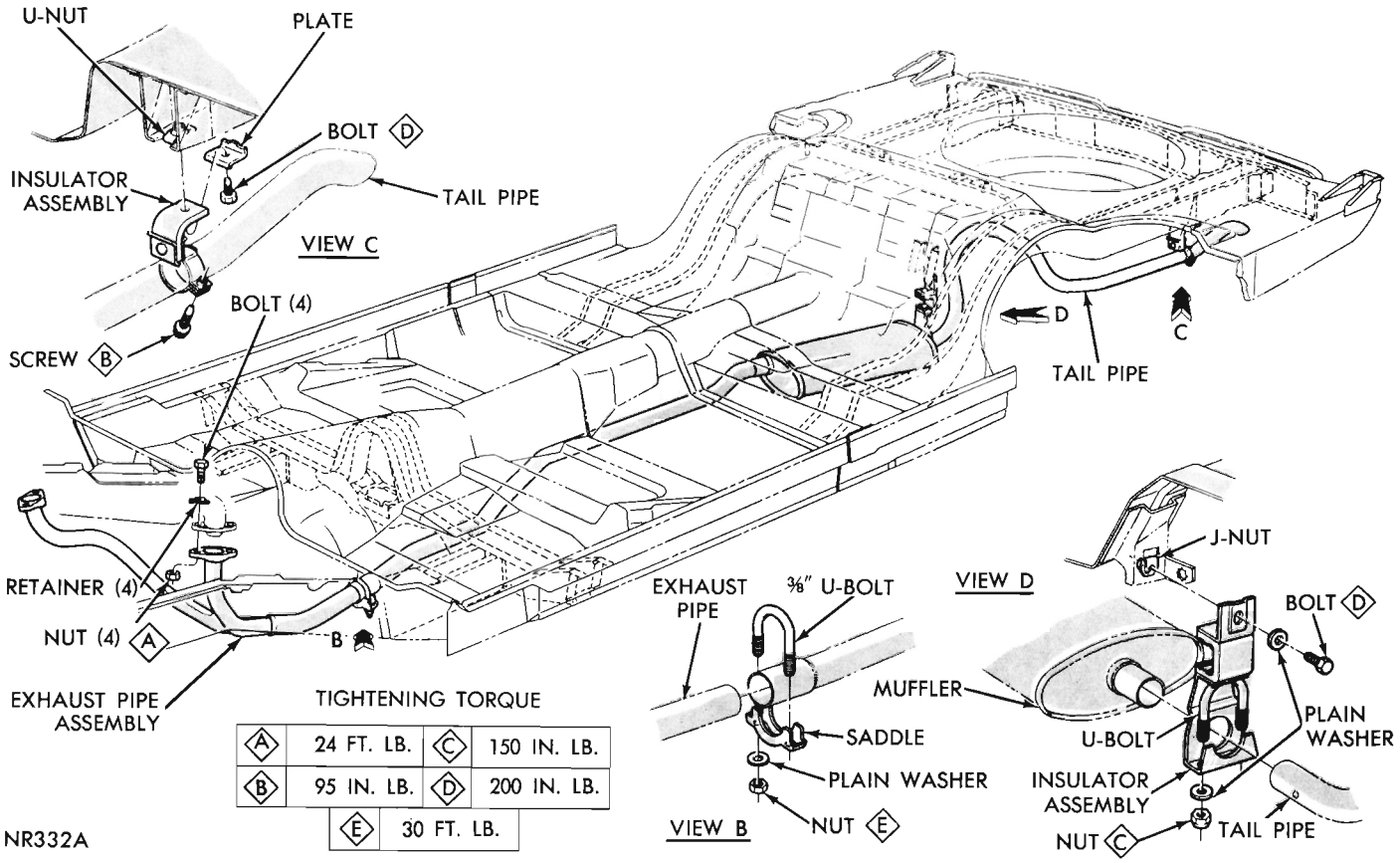

TIGHTENING TORQUE

(A)	24 FT. LB.	(C)	150 IN. LB.
(B)	95 IN. LB.	(D)	200 IN. LB.
(E)	30 FT. LB.		

Fig. 2—Exhaust System (Valiant—273, 318 Cu. In. Engines)

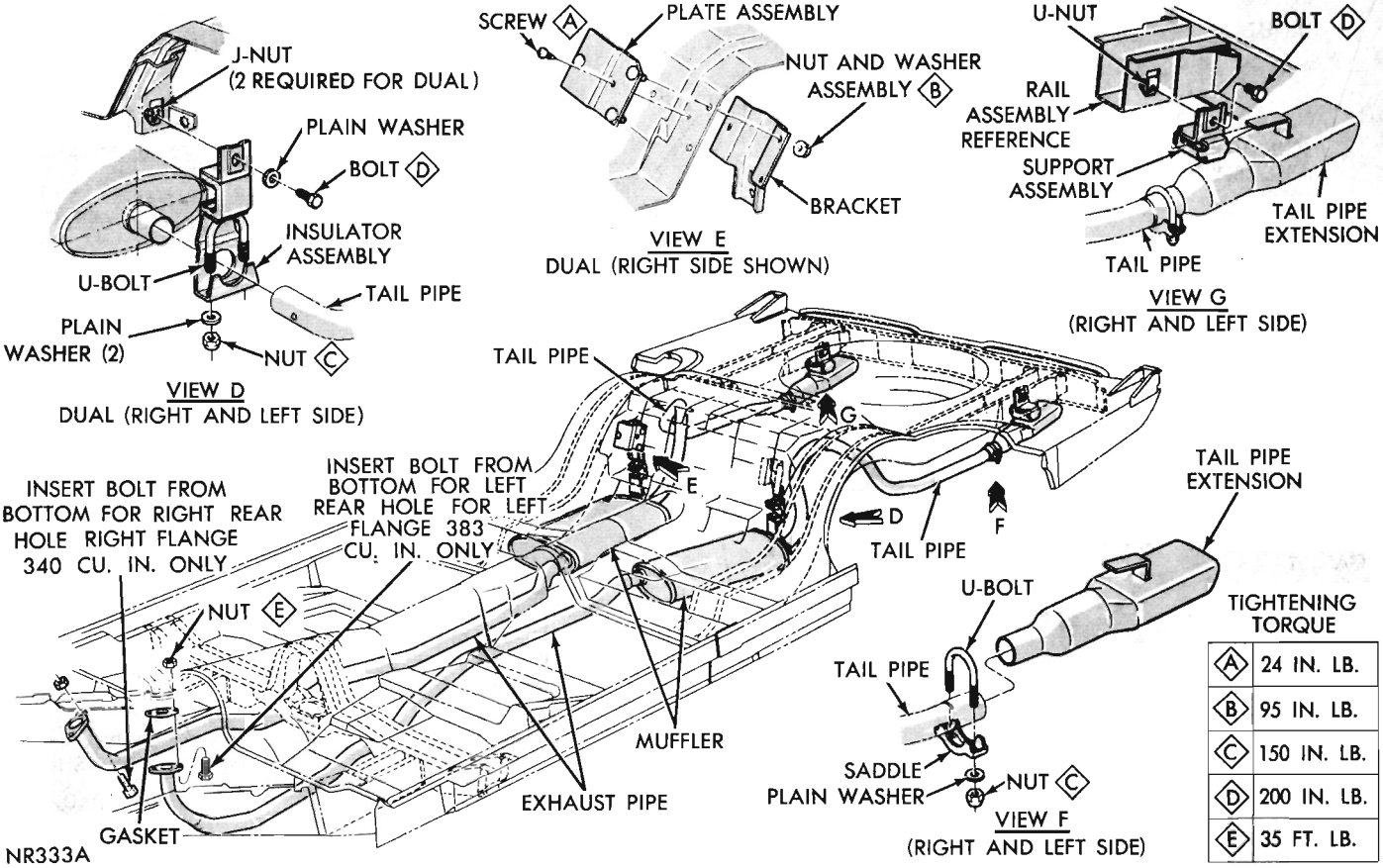

Fig. 3—Exhaust System (Barracuda—340, 383 Cu. In. Engines)

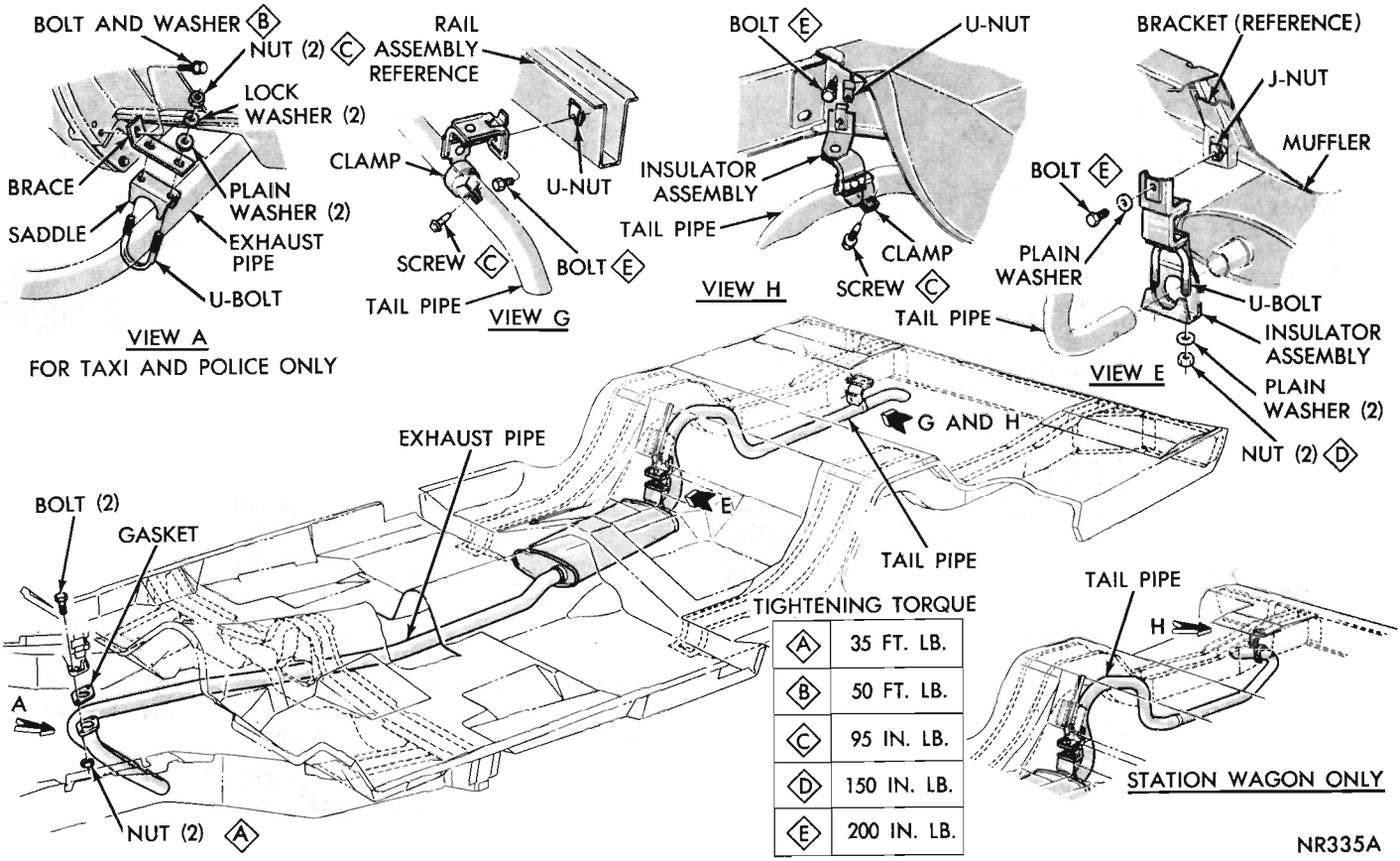

Fig. 4—Exhaust System (Belvedere—225 Cu. In. Engine)

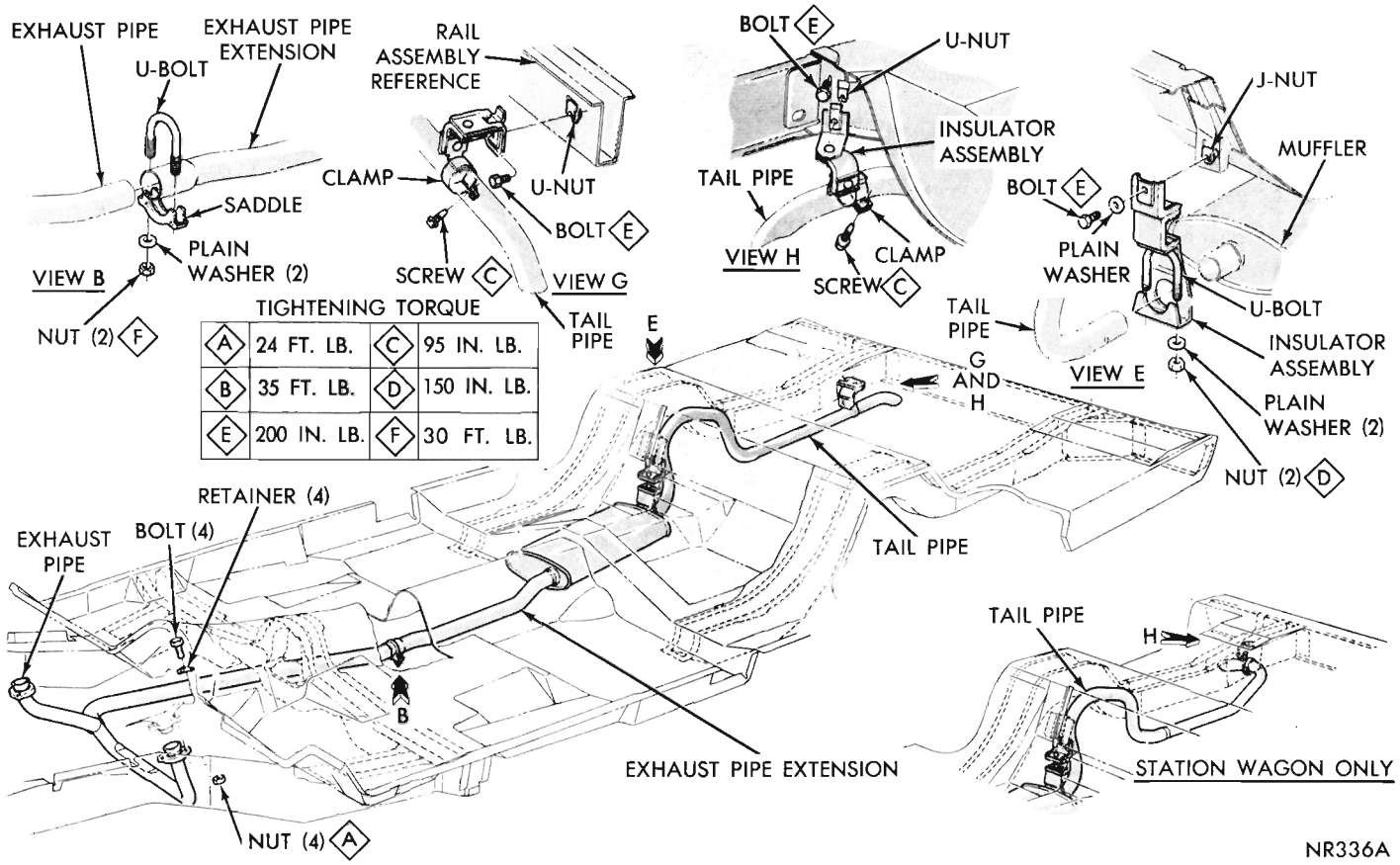

Fig. 5—Exhaust System (Belvedere 318 Cu. In. Engine)

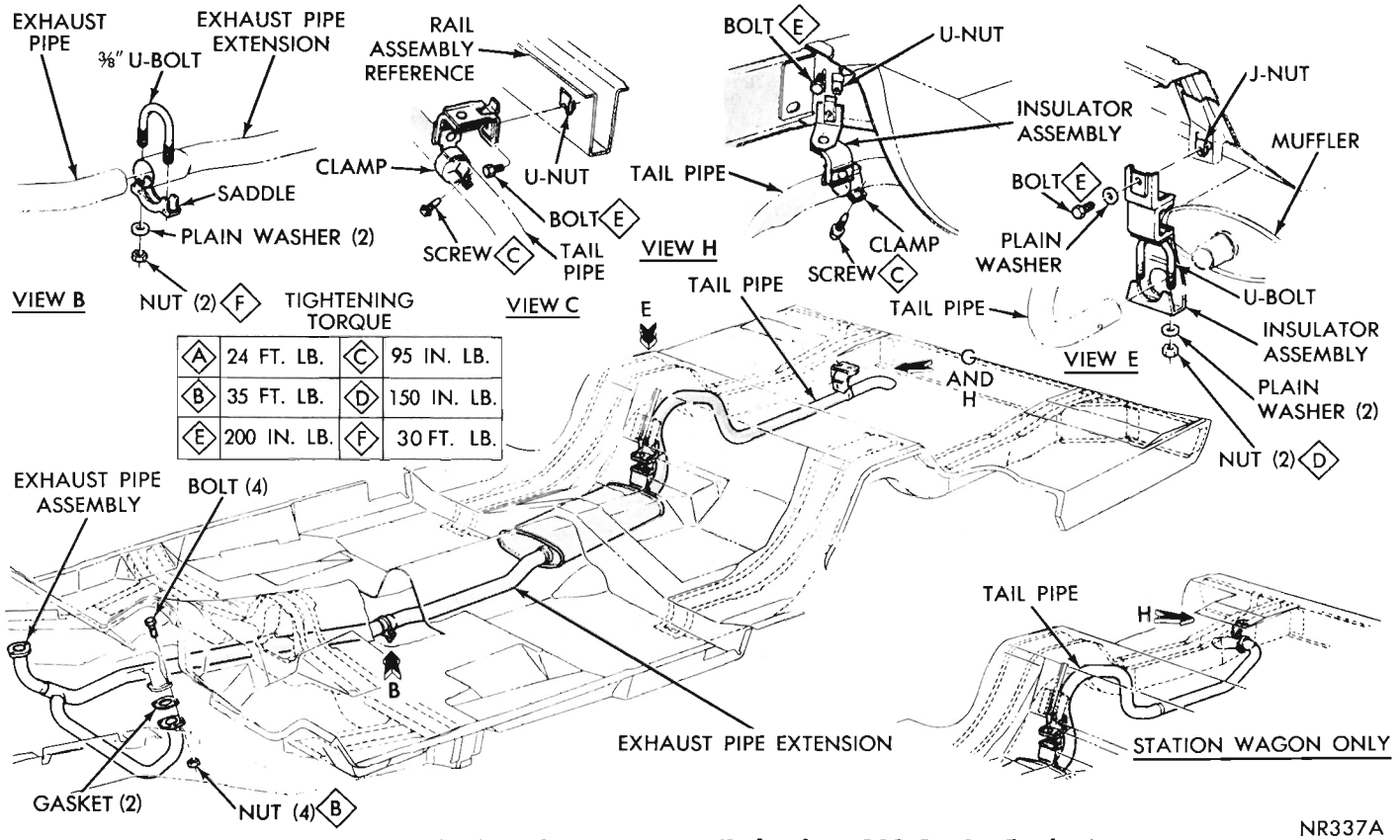

Fig. 6—Single Exhaust System (Belvedere 383 Cu. In. Engine)

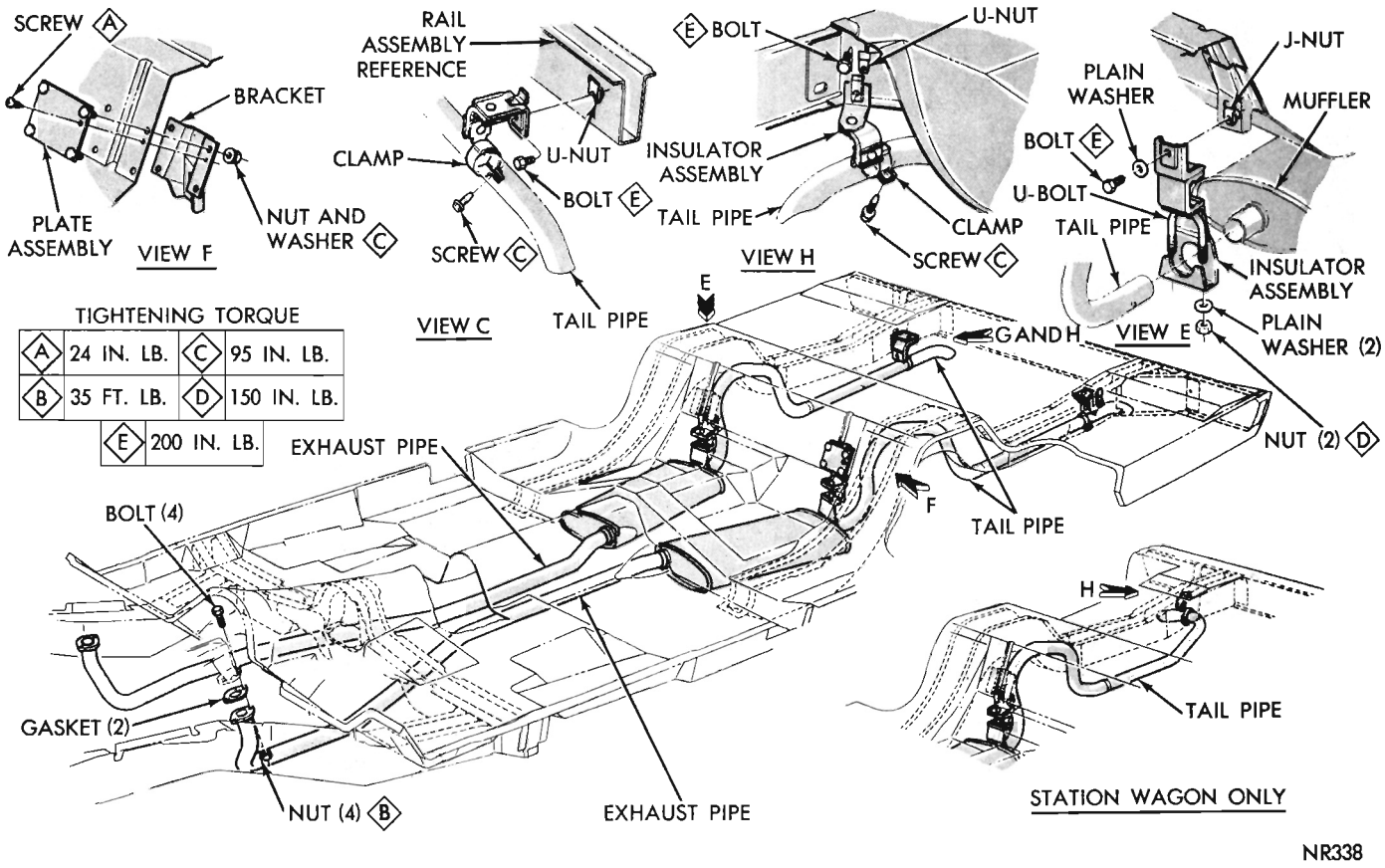

Fig. 7—Dual Exhaust System (Belvedere 383 Cu. In. Engine)

structions outlined for other models with the following additional steps:

(1) At the extension, remove the U bolt and saddle clamping arrangement (Fig. 8).

(2) Remove extension bracket support screw and nut attaching support to crossmember.

(3) Slide extension and support as an assembly from tail pipe.

(4) Withdraw extension bracket from rubber block in support.

Installation (All Models with 170, 225, 273, 318, 340, 383 and 440 Cu. In. Engines)

(1) Assemble exhaust pipe, muffler and tail pipe loosely to permit proper alignment (Figs. 1, 2, 3, 4, 5, 6, 7, 8, 9, 10, 11 and 12).

(2) Assemble exhaust pipe to exhaust manifold. On engines **without** ball joint seating connections, use new flange gaskets and tighten bolt nuts to 35 foot-pounds (50 foot-pounds on dual equipped Fury models). On models with 273 and 318 cubic inch engines, **do not** tighten ball joint bolt nuts at this time.

(3) Adjust tail pipe and muffler supports to provide proper clearance with underbody and adjacent parts. **Do not fully tighten attaching bolts and screws at this time.**

(4) Tighten all slip joint U-bolt nuts to 150 inch-pounds, (except exhaust pipe to extension slip joint on Valiant, Barracuda and Belvedere with 273, 318 or 383-2BBL which must use a heavier "U" bolt (3/8"-16 thread) and be tightened to 30 foot-pounds), working from rear to front.

(5) Tighten tail pipe support attaching clamp screws to 95 inch-pounds, at same time maintaining proper clearance with adjacent parts.

(6) On all Fury models, tighten tail pipe front support clamp screws to 100 inch-pounds.

(7) Tighten exhaust pipe ball joint connection bolt nuts to 24 foot-pounds. Alternate tightening nuts to insure parallelism of flanges.

Installation (Models with 426 Hemi Engine)

(1) Assemble exhaust pipes, mufflers and tail pipes loosely to permit proper alignment (Fig. 8).

(2) Assemble exhaust pipes to exhaust headers, **but do not tighten ball joint nuts at this time.**

(3) Adjust muffler and tail pipe supports to provide proper clearance with underbody and adjacent parts. **Do not fully tighten attaching bolts and nuts at this time.**

(4) Tighten front muffler slip joint U-bolt nuts to 150 inch pounds.

(5) Tighten muffler and tail pipe support attaching bolts to 200 inch-pounds, at same time maintaining proper clearance with adjacent parts.

(6) Tighten tail pipe U-bolt nuts to 95 inch-pounds.

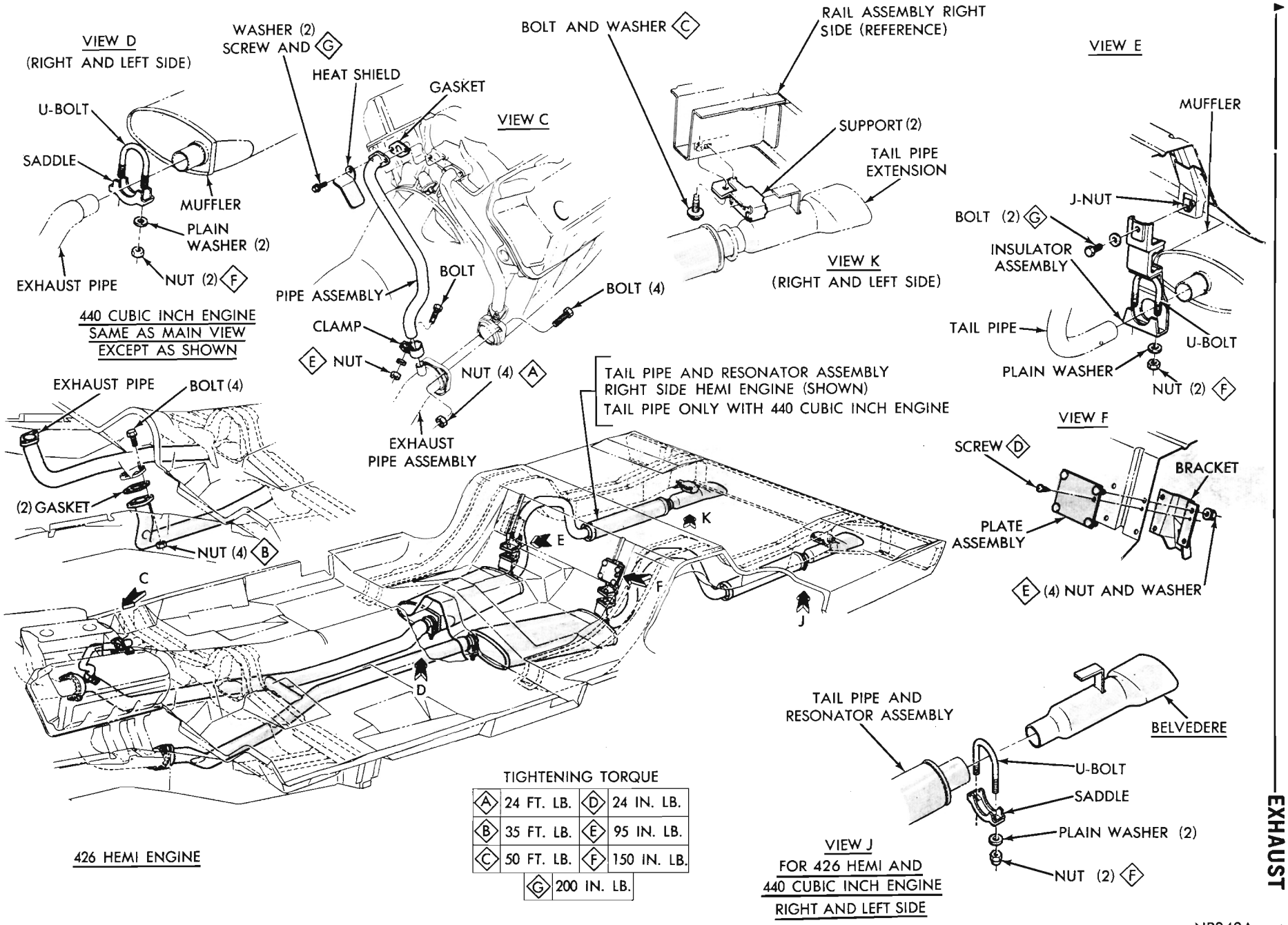

Fig. 8—Dual Exhaust System (Belvedere 426 Hemi, 440 Cu. In. Engines)

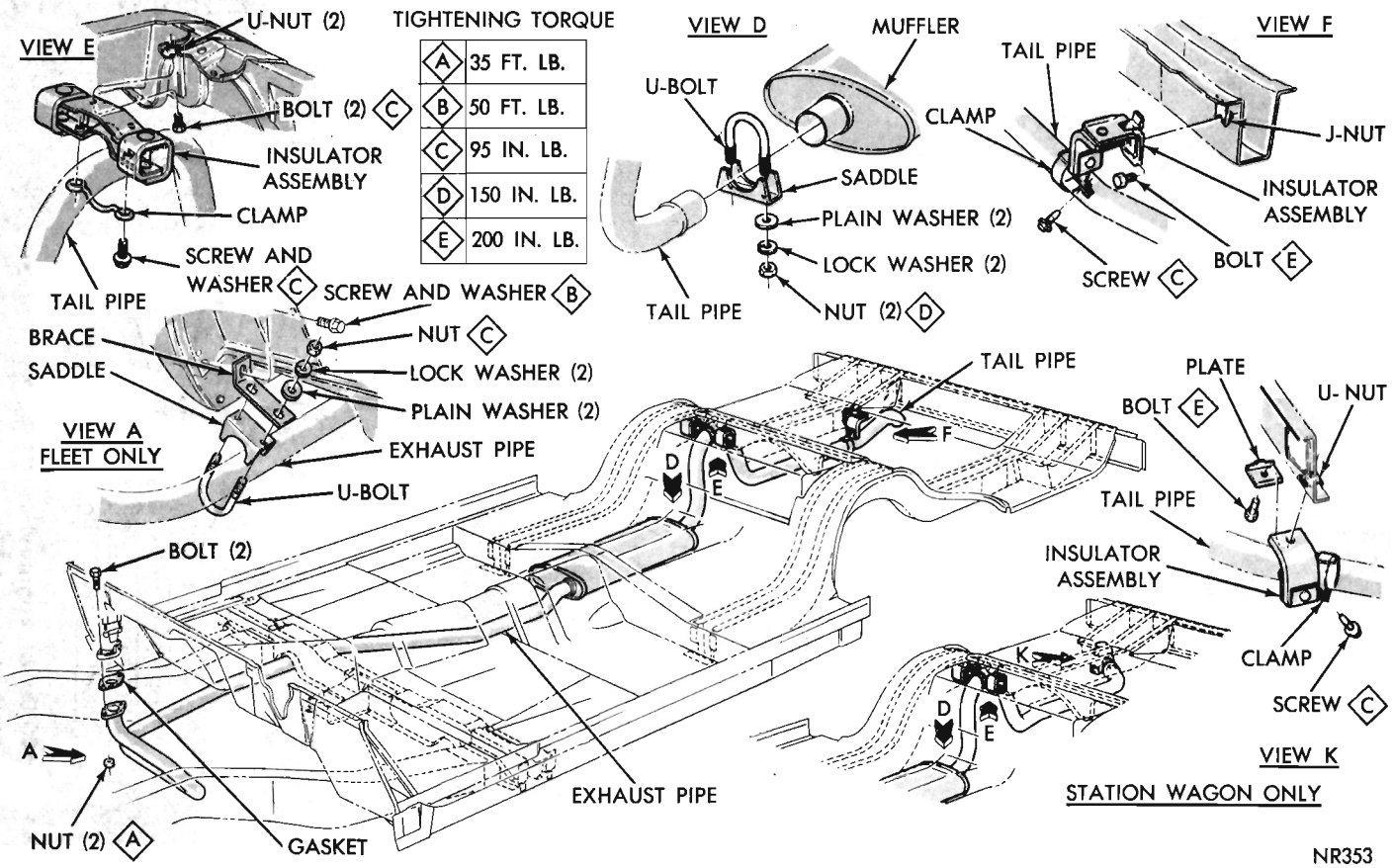

Fig. 9—Exhaust System (Fury—225 Cu. In. Engine)

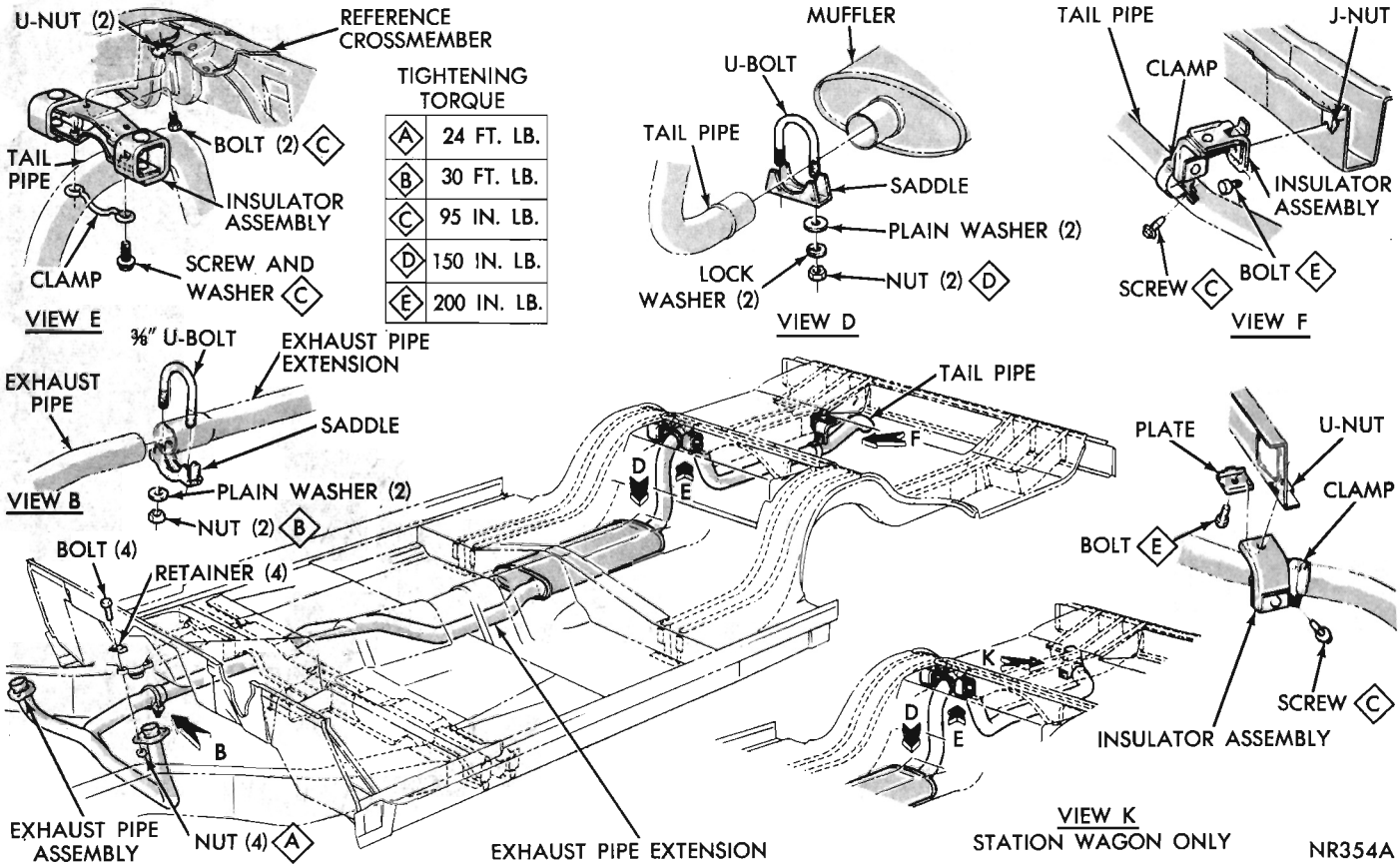

Fig. 10—Exhaust System (Fury-318 Cu. In. Engine)

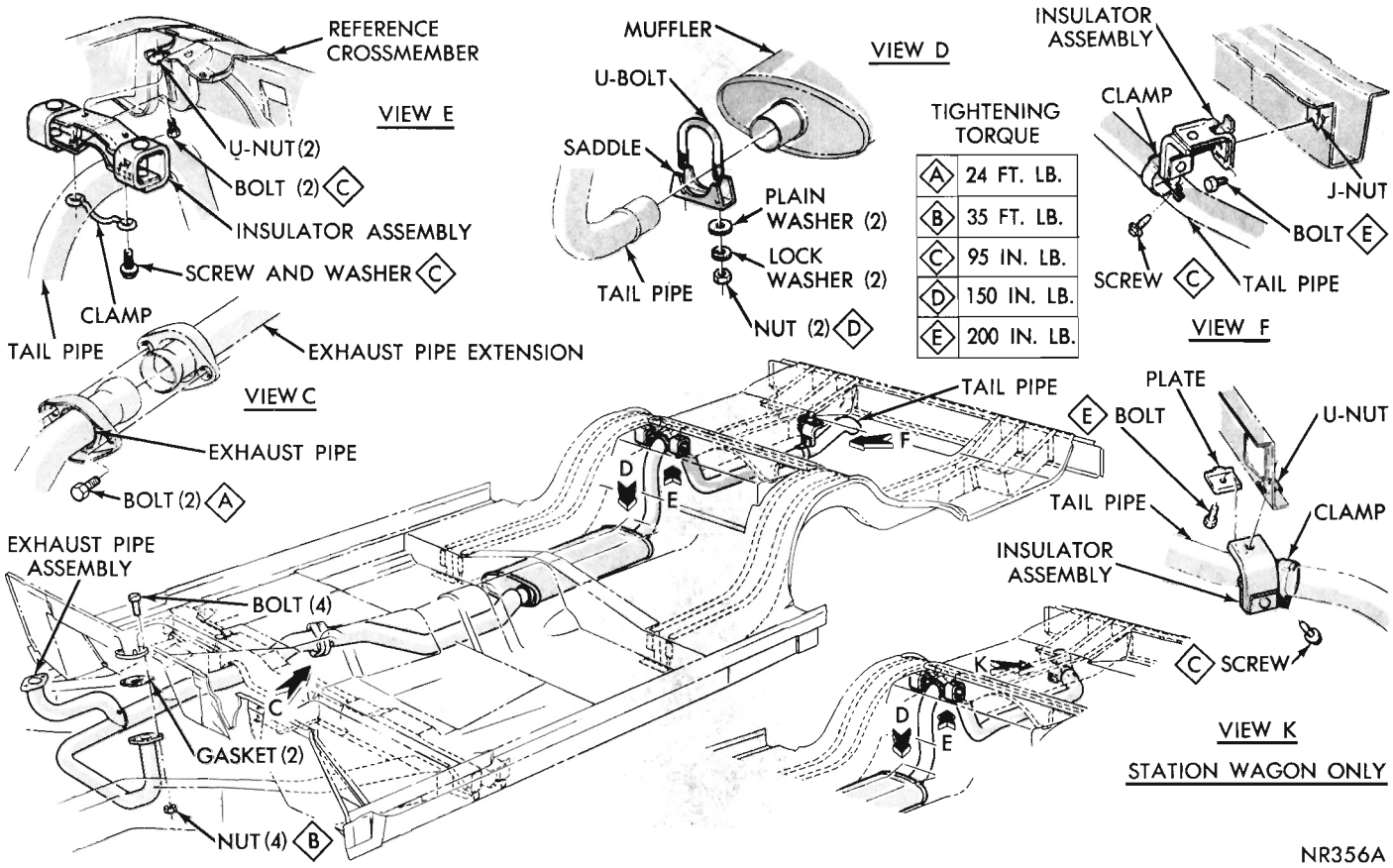

Fig. 11—Single Exhaust System (Fury 383 Cu. In. Engine)

(7) Tighten exhaust pipe ball joint bolt nuts to 24 foot-pounds.

(8) Install outlet heat tube on right hand exhaust pipe connection and secure with clamp, bolt, washer and nut. Tighten nut to 95 inch-pounds.

Extension Installation—GTX and 426 Hemi Models

(1) Install exhaust system as prescribed for other models with following additional steps:

(2) Insert extension bracket in rubber block in support assembly.

(3) Slide extension and support as an assembly on end of tail pipe until it bottoms (Fig. 8).

(4) Assemble support assembly to crossmember with screw and tighten to 50 foot-pounds.

(5) Slide "U" bolt and saddle in place on extension and tighten to 95 inch-pounds.

INTAKE AND EXHAUST MANIFOLD ASSEMBLY (6-Cylinder Engines)

Removal

(1) Remove carburetor air cleaner. **If engine is equipped with closed type breather cap, disconnect hose at air cleaner intake tube.**

(2) Disconnect vacuum control tube at carburetor and distributor. Disconnect fuel line, crankcase ventilator valve hose, automatic choke rod and throttle linkage at carburetor and remove carburetor.

(3) Disconnect exhaust pipe at exhaust manifold.

(4) Remove nuts and washers attaching manifold assembly to cylinder head and remove manifold (Fig. 13). Remove three screws securing intake manifold to exhaust manifold and separate manifolds.

Cleaning and Inspection

(1) Discard gasket and clean all gasket surfaces on manifolds. Wash manifolds in solvent and dry with compressed air.

(2) Test mating surfaces of manifolds for parallelism with a straightedge. Surfaces should be flat within .008 inch.

(3) Inspect manifolds for cracks or distortion.

(4) Test operation of manifold heat control valve. If shaft is binding, apply a suitable manifold heat control valve solvent.

Installation

(1) Install a new gasket between the two manifolds and install the three long screws securing the manifolds. **Do not tighten screws at this time.**

(2) Position manifold assembly on cylinder head, using a new gasket. Install triangular washers and nuts on upper studs and on the four lower studs opposite numbers 2 and 5 cylinders (Fig. 13). The eight

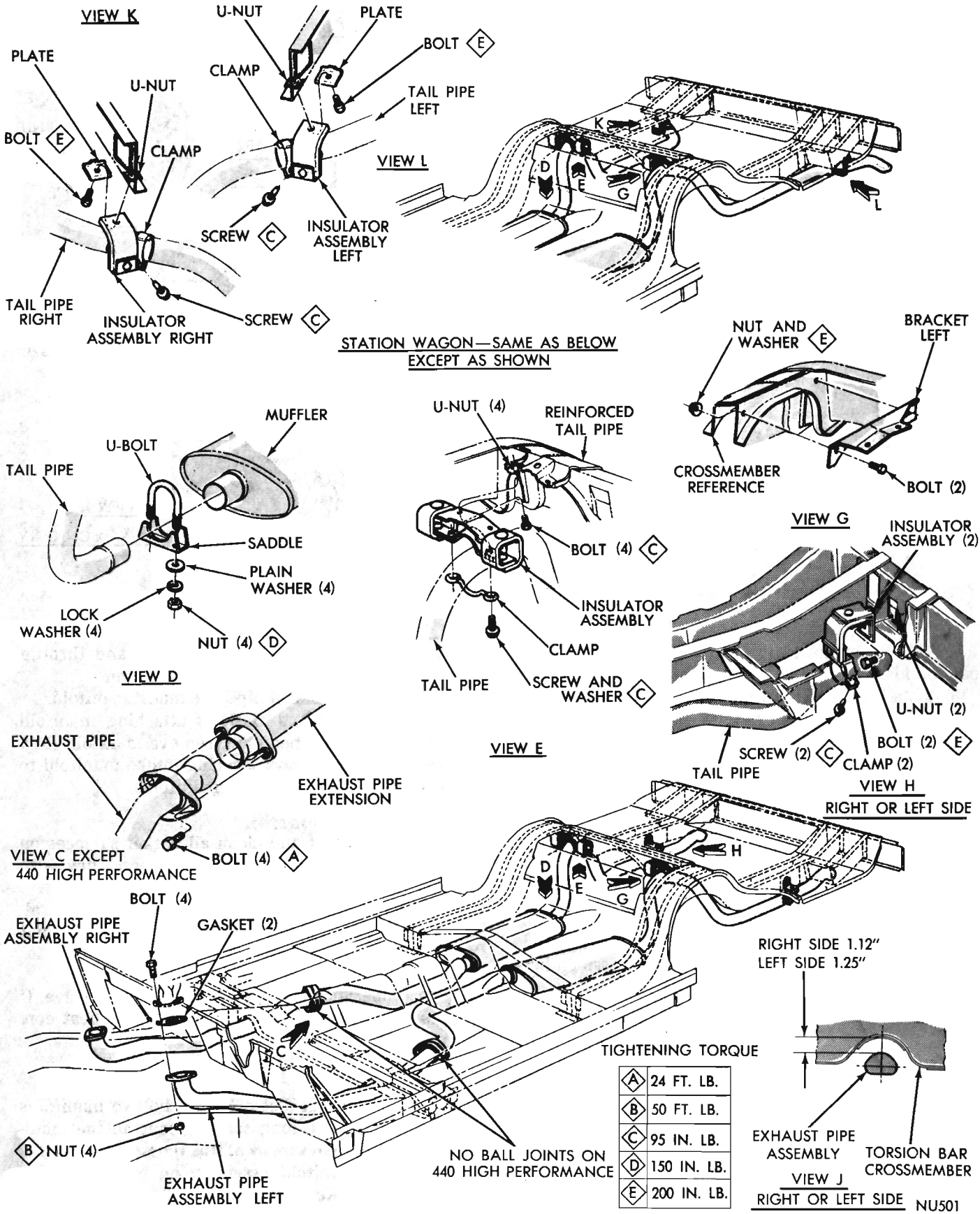

Fig. 12—Dual Exhaust System (Fury 383, 440 Cu. In. Engine)

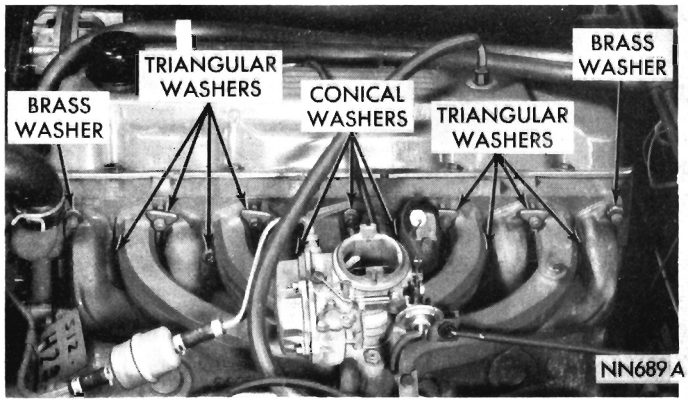

Fig. 13—Manifold Assembly (170, 225 Cu. In. Engines)

triangular washers should be positioned squarely on the machined surfaces of both intake and exhaust manifold retaining pads. These washers must be installed with **cup side against manifold. Install nuts and washers only when engine is cold.**

(3) Install steel conical washers with cup side facing manifold, one on center upper stud and two on center lower studs. Install brass washers at each end with flat side to manifold. Install nuts with flat side away from washer. Tighten nuts to 10 foot-pounds.

CAUTION: Do not over-tighten.

(4) Tighten three screws securing intake manifold to exhaust manifold to 15 foot-pounds, starting with **inner screw.**

(5) Attach exhaust pipe to manifold flange, using a new gasket and tighten bolt nuts to 35 foot-pounds.

(6) Install carburetor and connect automatic choke rod and throttle linkage. Assemble crankcase ventilator valve hose, vacuum control tube and fuel line to carburetor. Install carburetor air cleaner, and connect closed breather cap hose to air cleaner inlet tube, if used.

INTAKE MANIFOLD (273, 318, 340 Cu. In. Engines)

Remove intake manifold as outlined in Group 9, "Engine."

Servicing

(1) Clean manifold in solvent and blow dry with compressed air. Inspect manifold for cracks.

(2) Inspect mating surfaces of manifold for parallelism with a straightedge.

(3) Inspect exhaust crossover passages through manifold (Fig. 14). If passages are coated with hard, black carbon, they should be scraped clean and sandblasted to remove the carbon deposits.

(4) Install intake manifold, using new gaskets. Tighten manifold screws to 35 foot-pounds.

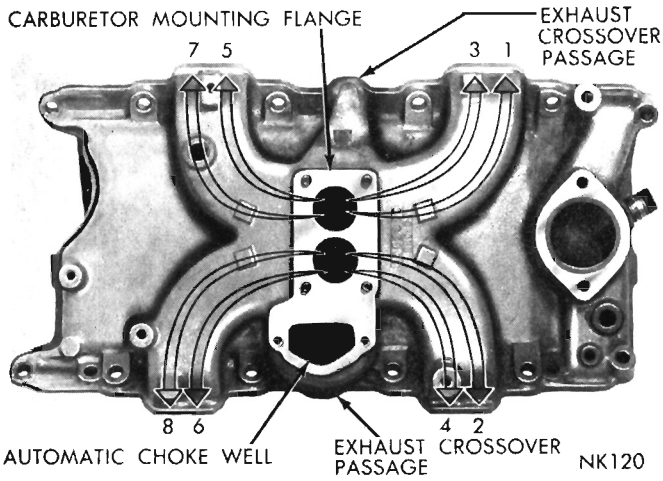

Fig. 14—Intake Manifold—273 Cu. In. Engine (Typical)

EXHAUST MANIFOLD (273, 318, 340 Cu. In. Engines)

Removal

(1) Remove bolts and nuts attaching exhaust pipe to manifold. **On left hand manifold,** remove bolt, nut and washer attaching the two manifold braces.

(2) Remove bolts, nuts and washers attaching manifolds to cylinder heads. Remove manifolds from cylinder heads.

Cleaning and Inspection

(1) Clean gasket surfaces on cylinder heads and manifolds, wash with solvent and blow dry with compressed air. Inspect manifolds for cracks.

(2) Inspect mating surfaces of manifold for parallelism with a straightedge. Gasket surfaces must be flat within .008 inch.

(3) On **right hand** manifold test manifold heat control valve for free operation. If necessary to free up, apply a suitable manifold heat control valve solvent to both ends of valve shaft. A suitable solvent is available under Part Number 2525054, Manifold Heat Control Valve Solvent. Be sure manifold is **COOL** and solvent is allowed to soak a few minutes to dissolve deposits. Then, work valve back and forth until it turns freely.

Installation

CAUTION: If studs came out with the nuts, install new studs, applying sealer on the coarse thread ends. If this precaution is not taken, water leaks may develop at the studs.

(1) Position two outboard arms of manifolds on the two studs on cylinder heads, using new gaskets. Install conical washers and nuts on studs (Fig. 15).

(2) Install two screws and conical washers at inner ends of outboard arms of manifold. Install two screws **without** washers on center arm of manifold (Fig. 15).

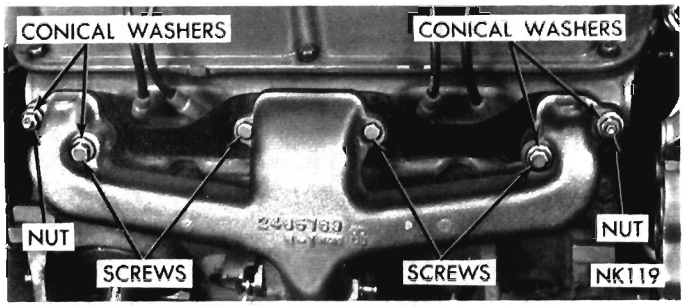

Fig. 15—Installing Exhaust Manifold (273, 318, 340 Cu. In. Engines)(Typical)

Tighten screws and nuts, starting at center arm and working outward, to 15 foot-pounds.

(3) Assemble exhaust pipe to manifold, and secure with bolts, nuts and washers. Tighten nuts to 25 foot-pounds. **On left hand manifold,** attach two braces to manifold with bolts, nuts and washers. Tighten nuts to 30 foot-pounds.

INTAKE MANIFOLD (383, 440 Cu. In. Engines)

Remove Intake Manifold as outlined in Group 9, "Engine."

Servicing

(1) Clean manifold (Fig. 16) in solvent and blow dry with compressed air.

(2) Inspect exhaust crossover passages and pressure test for any leakage into intake passages.

(3) Inspect mating surfaces for parallelism.

(4) Use new gaskets when installing manifold. Reinstall manifold as outlined in Group 9, "Engine."

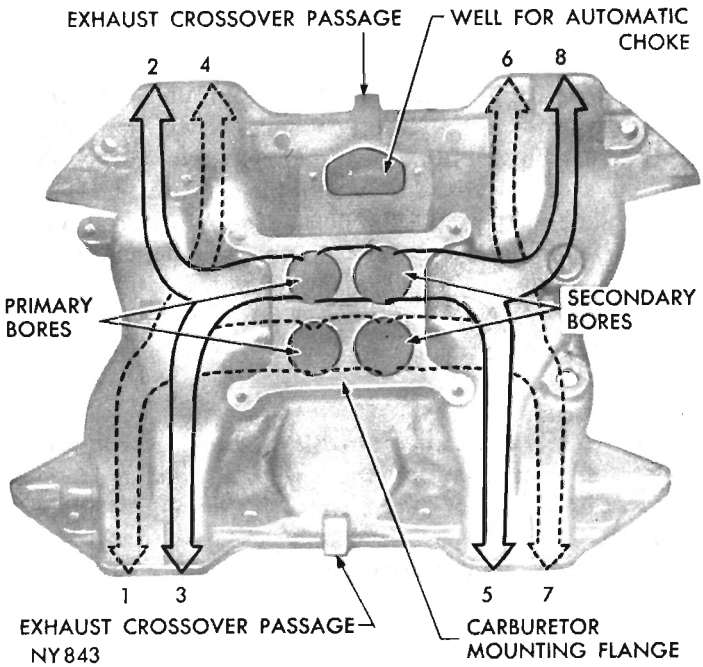

Fig. 16—Intake Manifold (383, 440 Cu. In. Engines)

EXHAUST MANIFOLD (383, 440 Cu. In. Engines)

Removal

(1) Disconnect spark plug cables.

(2) Remove alternator.

(3) Disconnect exhaust pipe at exhaust manifolds.

(4) Remove stud nuts attaching exhaust manifolds to cylinder heads. Slide manifolds off studs and away from cylinder heads.

Cleaning and Inspection

(1) Clean manifolds in solvent and blow dry with compressed air.

(2) Inspect manifolds for cracks and distortion.

(3) On **right hand** manifold test manifold heat control valve for free operation. If necessary to free up, apply a suitable manifold heat control valve solvent to both ends of valve shaft. A suitable solvent is available under Part Number 2525054, Manifold Heat Control Valve Solvent. Be sure manifold is **COOL** and solvent is allowed to soak a few minutes to dissolve deposits. Then, work valve back and forth until it turns freely.

Installation

CAUTION: If studs came out with the nuts, install new studs, applying sealer on the coarse thread ends. If this precaution is not taken, water leaks may develop at the studs.

(1) Install manifolds on cylinder heads. No gaskets are required. Tighten stud nuts to 30 foot-pounds.

(2) Install alternator and adjust belt tension.

(3) Attach spark plug cables to spark plugs.

INTAKE MANIFOLD (426 Hemi Engine)

Remove intake manifold as outlined in Group 9, "Engine."

Servicing

(1) Clean manifold in solvent and blow dry with compressed air.

(2) Inspect exhaust passages and pressure test for any leakage into intake passages.

(3) Inspect mating surfaces for parallelism.

(4) Use new gaskets when installing manifold. Reinstall manifold as outlined in Group 9, "Engine."

INTAKE MANIFOLD HEAT TUBES (426 Hemi Engine)

Removal—Inlet Tube

(1) To remove inlet tube, remove two stud nuts and washers from right hand exhaust header (Fig. 17).

(2) Remove screws attaching upper end of inlet tube to rear face of intake manifold.

(3) Remove tube and gaskets and discard gaskets.

Outlet Tube

(1) To remove outlet tube, remove nut, washer and bolt from tube clamp at exhaust pipe (Fig. 17). Remove clamp from tube.

(2) Remove two screws attaching heat shield and outlet tube to rear face of intake manifold and remove tube.

Installation—Inlet Tube

(1) Clean gasket surfaces of exhaust header and intake manifold of all old gasket particles.

(2) Place new gaskets in position and install inlet tube on exhaust header studs.

(3) Install washers and nuts on studs and tighten to 200 inch-pounds.

(4) Secure upper end of tube with screws and washers. Tighten screws to 200 inch-pounds.

Outlet Tube

(1) Install tube and clamp on exhaust pipe connection.

(2) Install new gasket and tube at upper end of outlet tube.

(3) Install heat shield and outer screw and washer on outlet tube flange. Install inner screw and washer. Tighten screws to 200 inch-pounds.

(4) Install clamp bolt, washer and nut and tighten nut to 100 inch-pounds.

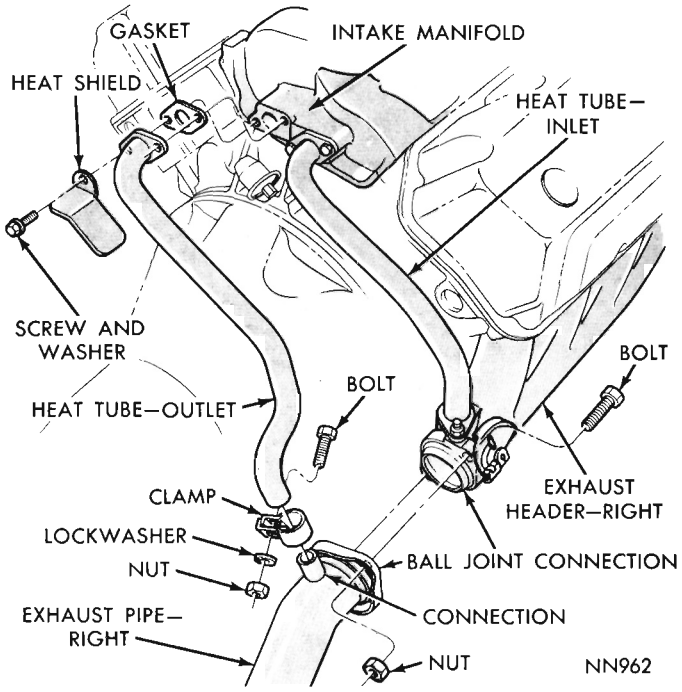

Fig. 17—Intake Manifold Heat Tube Arrangement (426 Hemi Engine)

EXHAUST HEADERS (426 Hemi Engine)

Removal

(1) On **right hand** exhaust header, disconnect carburetor choke heat tube.

(2) Disconnect choke intake heat tube from lower inside surface of right hand exhaust header.

(3) Remove ball joint bolts connecting exhaust pipes to exhaust headers and separate pipes from headers.

(4) Remove screws attaching inlet heat tube to exhaust header and separate tube from header.

(5) Remove screws and washers attaching exhaust headers to cylinder heads. Remove headers and gaskets from cylinder heads.

Cleaning and Inspection

(1) Clean gasket surfaces on cylinder heads and headers, wash with solvent and blow dry with compressed air. Inspect headers for cracks.

(2) Inspect mating surfaces of headers for parallelism with a straightedge. Gasket surfaces must be flat within .008 inch.

(3) On **right hand** header, test heat control valve for free operation. If necessary to free up, apply a suitable manifold heat control valve solvent to both ends of valve shaft. A suitable solvent is available under Part Number 2525054, Manifold Heat Control Valve Solvent. Be sure header is **COOL** and solvent is allowed to soak a few minutes to dissolve deposits. Then, work valve back and forth until it turns freely.

Installation

(1) Place headers in position on cylinder heads, using new gaskets. Install conical washers and screws. Position washers with concave side toward bolting flanges. Tighten screws to 35 foot-pounds.

(2) Assemble exhaust pipes to exhaust headers. Secure ball joints with bolts and nuts. Tighten nuts to 20 foot-pounds.

(3) Assemble inlet heat tube to right hand header, using new gaskets. Tighten screws to 200 inch-pounds.

(4) Connect choke intake heat tube to lower inside surface of exhaust header.

(5) Connect choke heat tube to exhaust header.

MANIFOLD HEAT CONTROL VALVE (All Engines)

Operation of the manifold heat control valve should be inspected periodically. With engine idling, accelerate momentarily to wide open throttle. The counterweight should respond by moving **counterclockwise** approximately 1/2 inch and return to its original position. If no movement is observed, shaft is binding due to accumulation of deposits or thermostat is weak or broken.

The application of a suitable manifold heat control valve solvent, every oil change, to both ends of manifold heat control valve shaft at bushings, will keep valve working freely. A suitable solvent is available under Part Number 2525054, Manifold Heat Control Valve Solvent. The solvent should be applied when manifold is **COOL** and allowed to soak a few minutes to dissolve deposits. Then, work valve back and forth until it turns freely.

Servicing 6 Cylinder Engine

Removal

(1) Remove counterweight and lock from end of shaft by loosening clamp bolt (Fig. 18).

(2) Unhook thermostat from stop pin and remove from valve shaft slot.

(3) Move valve shaft back and forth and test operation. If shaft is binding in manifold, apply a suitable manifold heat control valve solvent to dissolve deposits.

(4) Examine bumper stop on counterweight. If damaged, replace with a new one.

Installation

(1) Turn shaft in extreme **clockwise** position. Place a new thermostat in shaft slot (Fig. 19) and position it with outer end in lower left hand position.

(2) Wrap outer end of thermostat **clockwise** and engage it under stop pin.

(3) Place counterweight on shaft, with shield in upward position and insert lock in shaft slot (Fig. 20).

(4) Center counterweight on shaft and turn shaft **counterclockwise** until bumper passes stop pin.

(5) Press counterweight on shaft until it is seated. Tighten clamp bolt to 50 inch-pounds with C-3380 Torque Wrench.

(6) Make sure anti-rattle spring is in place on opposite end of shaft. Test operation of valve.

273-318 CUBIC INCH ENGINE

Removal

(1) Remove exhaust pipe from manifold.

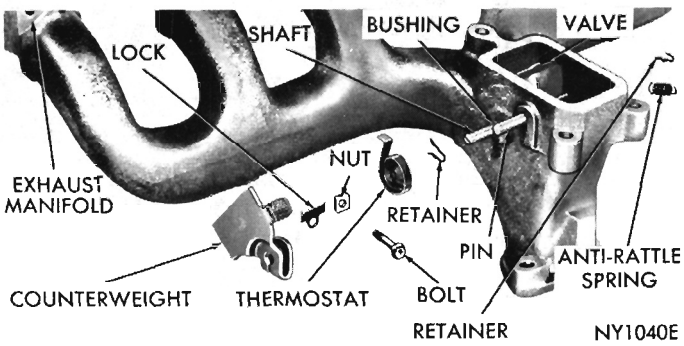

Fig. 18—Manifold Heat Control Valve—Disassembled (170, 225 Cu. In. Engines)

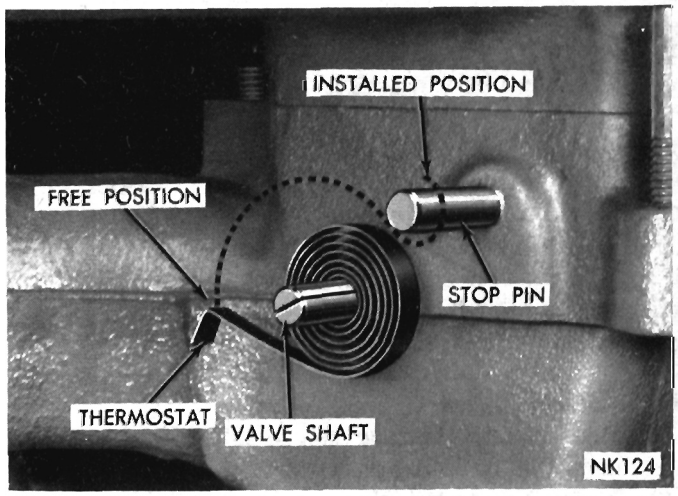

Fig. 19—Installing Thermostat (170, 225 Cu. In. Engines)

(2) Remove exhaust manifold from engine.

(3) Position valve plate, grind off spot welds from valve plate and shaft.

(4) Remove counterweight and shaft assembly, valve plate. Press out bushings and seals from manifold (Fig. 21).

(5) Inspect vent holes and clean out if necessary.

Installation

(1) Press in a new seal with the cupped end facing outward, on counterweight side of exhaust manifold, to a depth of .690 inch (Fig. 21).

(2) Press in bushing flush with outer edge of exhaust manifold.

(3) Press in a new seal in other side until there is a dimension of 1.565 inch between right and left hand seals.

(4) Press in front bushing flush with manifold.

(5) Line ream bushings and seals, .3095 to .3110

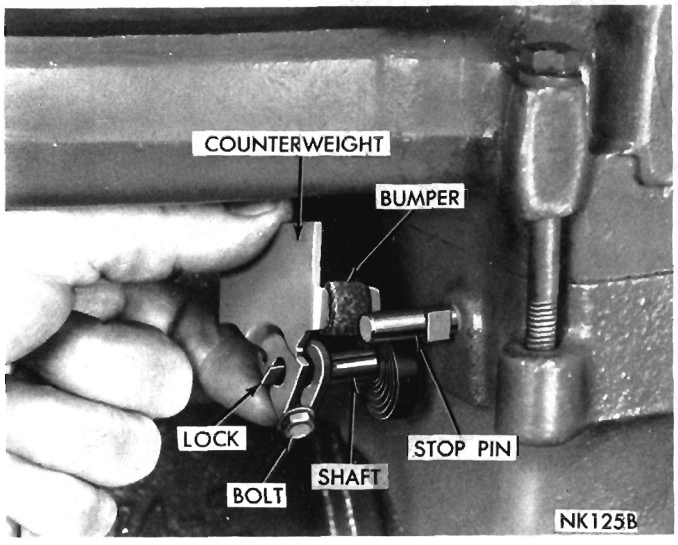

Fig. 20—Installing Counterweight (170, 225 Cu. In. Engines)

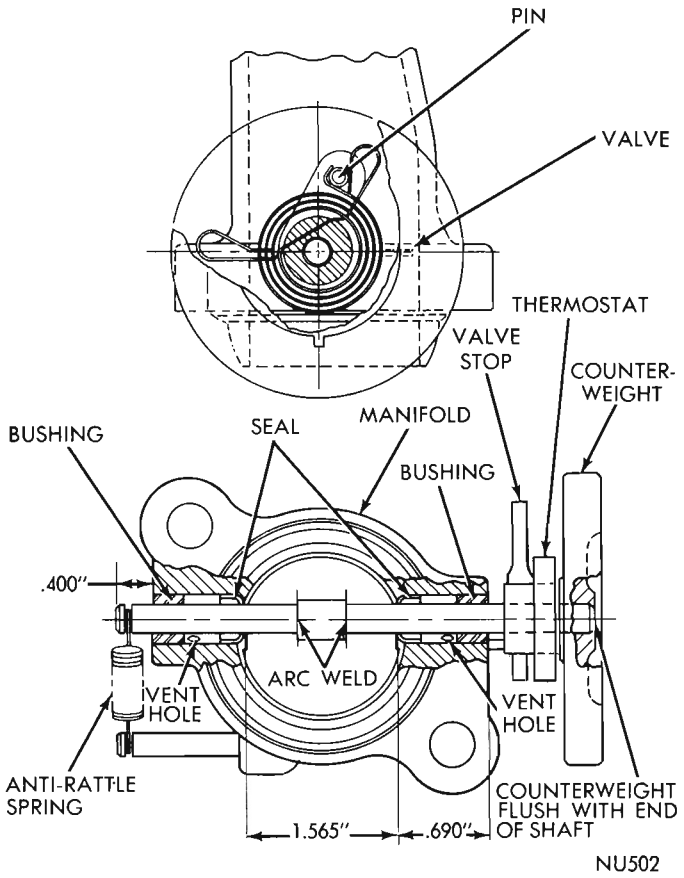

Fig. 21—Proper Manifold Heat Control Valve Installation (273-318 Cu. In. Engines)

inch diameter. Test for free fit of shaft in bushings and seals.

(6) Press counterweight on plain end of shaft until flush with end of shaft.

(7) Position thermostat so center end or tab is pointing left and hook or outer end points down, install thermostat on counterweight.

(8) Install valve stop on counterweight so looped ends face away from thermostatic spring hook end.

(9) Holding thermostatic spring wrapped 140 degrees in a counterclockwise direction viewed from counterweight end, install shaft assembly through outer bushing, seal and valve plate with strap facing flange end of manifold; attach hook end of thermostatic spring to stop pin.

(10) With forward end of shaft positioned .400 inch through manifold and valve plate closed, counterweight stop against stop pin as shown in figure 21, arc weld valve plate to shaft. **Arc welding ground must be made at counterweight.**

(11) Test for free operation. Install anti-rattle spring.

(12) Position new gasket on studs, install exhaust manifold and tighten to 30 foot-pounds.

(13) Install exhaust pipe to manifold (no gasket used) and tighten to 35 foot-pounds.

340 CUBIC INCH ENGINE

Removal

(1) Remove exhaust pipe from manifold.

(2) Remove exhaust manifold from engine.

(3) Position valve plate, grind off spot welds from valve plate and shaft.

(4) Remove counterweight and shaft assembly, valve plate. Press out bushings and plug from manifold (Fig. 22).

Installation

(1) Press in new outer bushing flush with outer edge of manifold (Fig. 22).

(2) Press in new inboard or inner bushing to a depth of 7/16 inch.

(3) Line ream bushings, .3095 to .3110 inch diameter, test for free fit of shaft in bushings.

(4) Press in plug (with cupped end facing inner bushing) until flush with manifold.

(5) Mark shaft with suitable dye at 1.240 inches at one end, press counterweight on marked end of shaft until flush with end of shaft.

(6) Position spring so center end or tab is pointing left and hook or outer end points down, install spring on counterweight.

(7) Install spring stop on counterweight so looped ends face away from thermostatic spring hook end.

(8) Install seal in manifold in counterbore on counterweight side.

(9) Holding thermostatic spring wrapped a 140 de-

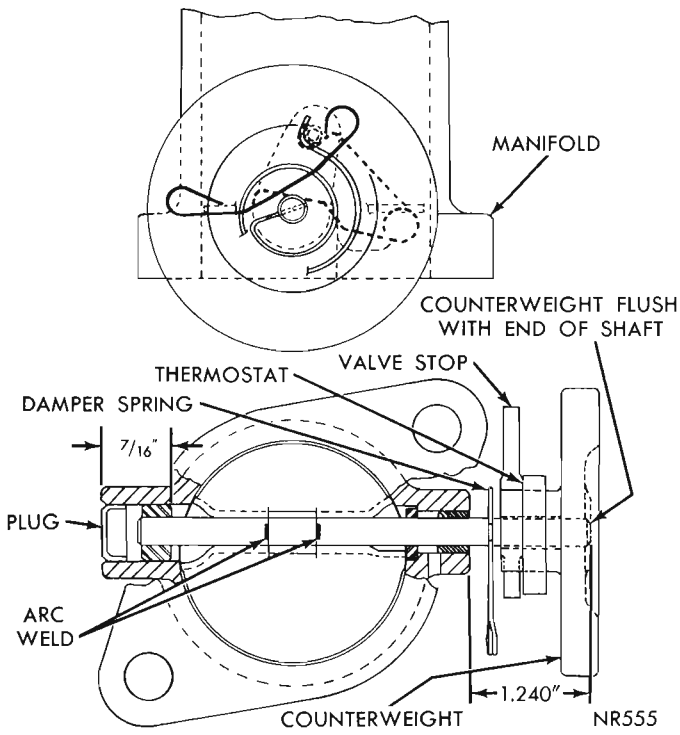

Fig. 22—Proper Manifold Heat Control Valve Installation (340 Cu. In. Engine)

grees in a counterclockwise direction viewed from counterweight end, install shaft assembly through outer bushing, seal, valve plate with strap facing flange end of manifold and attach hook end of thermostatic spring on stop pin.

(10) With counterweight end of shaft positioned 1.240 inches (previously identified) away from manifold and valve plate closed, arc weld valve plate to shaft. **Arc welding ground must be made at counterweight.**

(11) Test for free operation.

(12) Position new gasket on studs, install exhaust manifold and tighten to 30 foot-pounds.

(13) Assemble exhaust pipe with a new gasket to manifold and tighten to 35 foot-pounds.

383-440 CUBIC INCH ENGINE

The counterweight and the thermostat, being located on opposite ends of the valve shaft, can be serviced individually without the necessity for complete disassembly.

Counterweight—Removal

(1) Remove counterweight and bumper from outer end of valve shaft by loosening clamp bolt (Fig. 23).

Thermostat—Removal

(1) To remove thermostat on inner end of valve shaft, first remove anti-rattle spring (Fig. 24).

(2) Unhook thermostat from stop pin and slide from valve shaft by pushing with a screwdriver at center of thermostat to prevent damaging thermostat as it slides over edge of undercut on shaft.

(3) Move valve shaft back and forth and test operation. If shaft is binding in manifold, apply a suitable solvent to dissolve the deposits.

(4) If fabric on bumper is worn, install a new bumper.

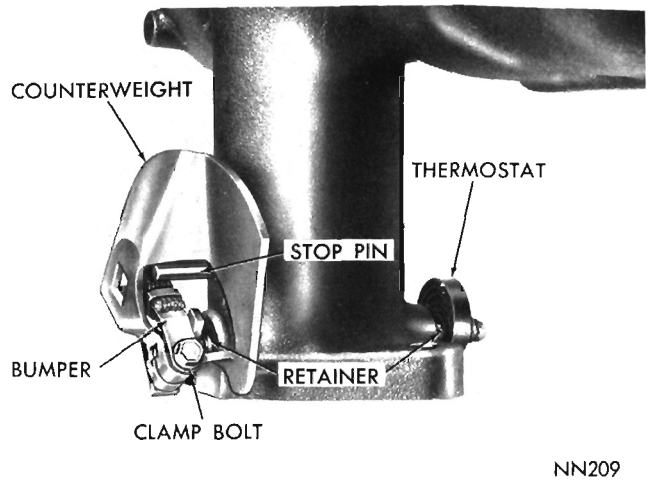

Fig. 23—Manifold Heat Control Valve (383, 440 Cu. In. Engines)

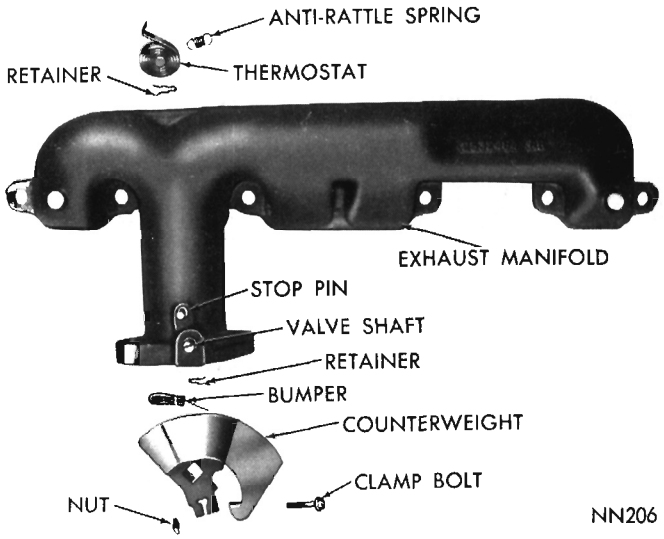

Fig. 24—Manifold Heat Control Valve—Disassembled (383, 440 Cu. In. Engines)

Thermostat—Installation

(1) Be sure shaft retainer is in place on inner end of valve shaft. Then, turn valve shaft in extreme clockwise position.

(2) Install a new thermostat in slot in inner end of shaft (Fig. 25) with outer end in upper left hand position, as viewed from right hand side of engine. Press inner end of thermostat into shaft and seat firmly.

(3) Wrap outer end of thermostat clockwise, as viewed from right hand side of engine, and engage over stop pin (Fig. 25).

(4) Install anti-rattle spring on end of stop pin and end of valve shaft. Make sure it does not interfere with thermostat (Fig. 26).

Counterweight Installation

(1) Be sure shaft retainer is in place on outer end of valve shaft.

(2) Install counterweight and bumper on outer end of valve shaft. The bumper should be located on right hand side of hub section of counterweight and on left hand side of stop pin (Fig. 23).

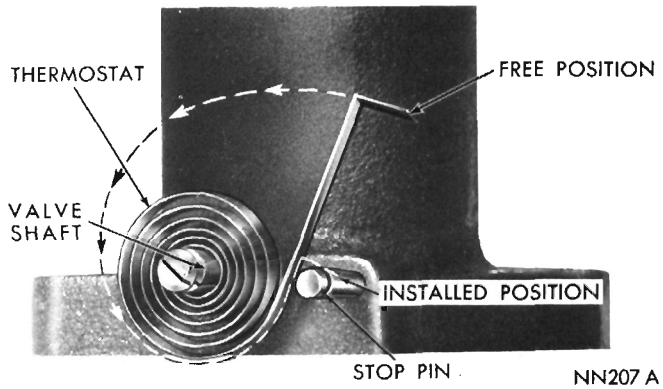

Fig. 25—Installing Thermostat (383, 440 Cu. In. Engines)

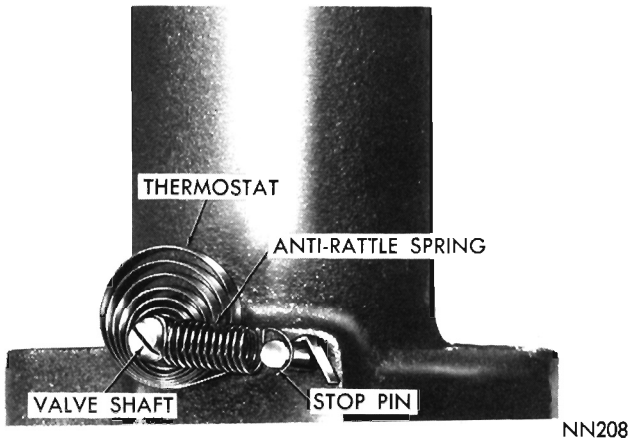

Fig. 26—Thermostat Installed (383, 440 Cu. In. Engines viewed from engine side)

(3) Tighten clamp bolt to 50 inch-pounds with C-3380 Torque Wrench. Test operation of valve for freedom of movement.

426 HEMI ENGINE

Removal

(1) Remove counterweight from outer end of valve shaft by loosening clamp bolt (Fig. 27).

(2) Unhook thermostat from stop pin and slide from valve shaft slot.

(3) If fabric bumper on counterweight is worn, it may be replaced by sliding it off the tab and sliding on a new one.

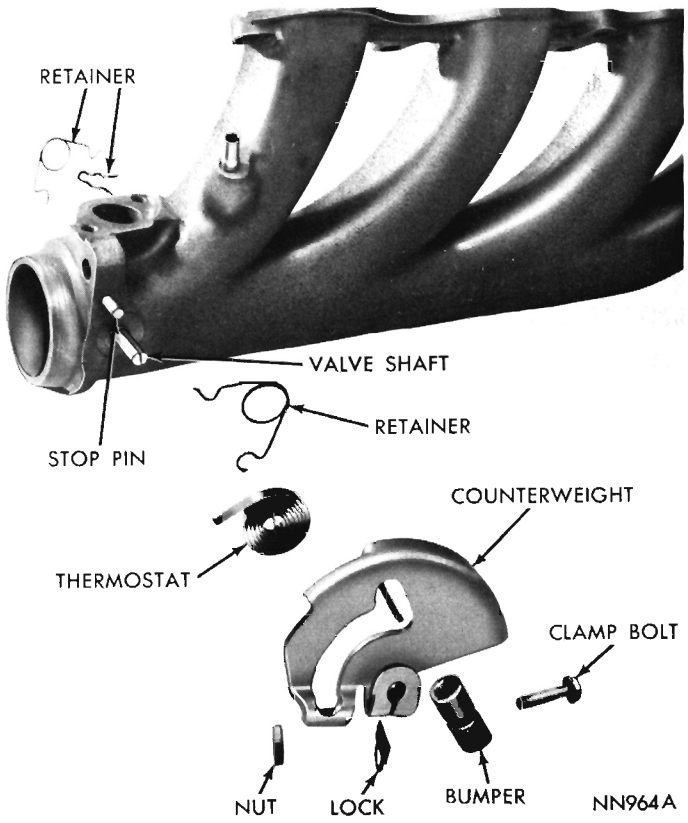

Fig. 27—Heat Control Valve—Disassembled (426 Hemi Engine)

Installation

(1) Be sure shaft retainers (Fig. 27) are in place in grooves in valve shaft and stop pins. Then, turn shaft in the extreme **counterclockwise** position.

(2) Install a new thermostat in slot in shaft (Fig. 28) with outer end of thermostat in lower left hand position. Press inner end of thermostat into shaft and seat firmly.

(3) Wrap outer end of thermostat **counterclockwise** and engage under stop pin.

(4) Install counterweight on outer end of valve shaft with lock engaged in valve shaft slot and bumper on right hand side of stop pin (Fig. 29).

(5) Tighten clamp bolt to 50 inch-pounds with C-3380 Torque Wrench. Test operation of valve for freedom of movement.

MANIFOLD HEAT CONTROL VALVE REPLACEMENT (Except 273-318-340 Cu. In.)

Removal

(1) Remove alternator.

(2) Remove exhaust pipe from manifold.

(3) Remove exhaust manifold from engine.

(4) Remove counterweight, thermostat, shaft retainers and anti-rattle spring.

(5) Cut valve plate off shaft.

(6) Remove shaft and press bushings from manifold.

Installation

(1) Install new bushings in exhaust manifold.

(2) Install shaft in manifold and check for freedom of movement. If shaft fails to turn freely, it will be necessary to hone bushings to shaft size.

(3) Pull shaft out far enough to position valve plate on shaft, then slide shaft into position in both bushings.

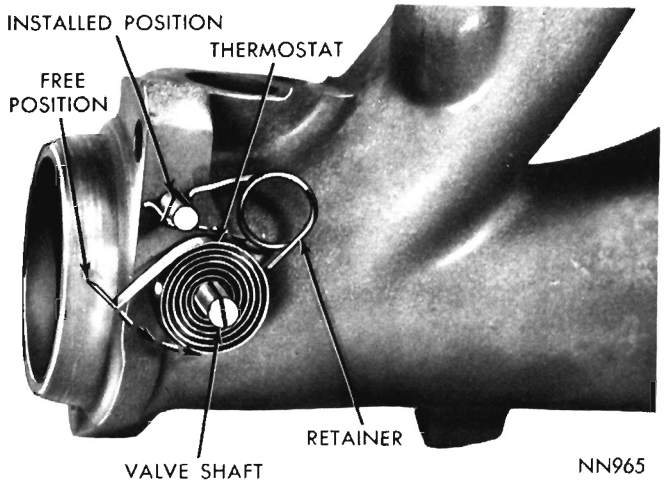

Fig. 28—Installing Thermostat (426 Hemi Engine)

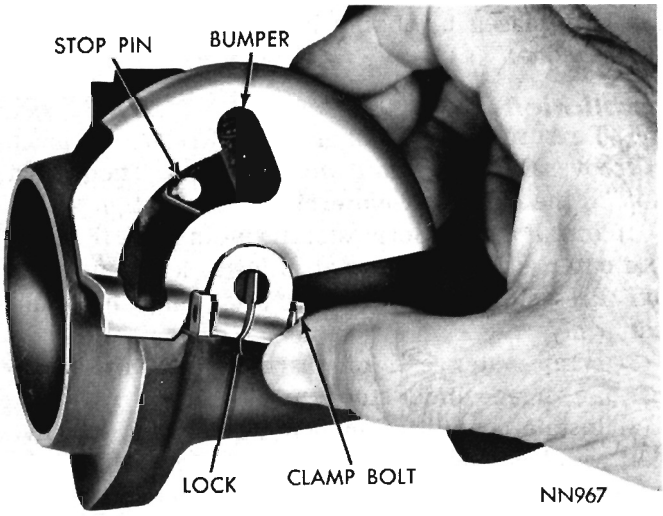

Fig. 29—Installing Counterweight (426 Hemi Engine)

(4) Align hole in valve plate with hole in shaft and insert a drift into both holes to maintain correct positioning of valve plate while it is being welded to shaft.

(5) Remove drift from valve plate and shaft.

(6) Install new thermostat anti-rattle spring, shaft retainers and counterweight assembly on shaft, as outlined for respective engine.

(7) Install manifold on engine assembly.

(8) Attach exhaust pipe to manifold, using a new gasket where required.

(9) Install alternator and adjust belt tension.

(10) Start engine and test operation of manifold heat control valve assembly.

Servicing

Test manifold heat control valve for proper operation during engine tune-up and apply a suitable heat control valve solvent to both ends of valve shaft to dissolve deposits.

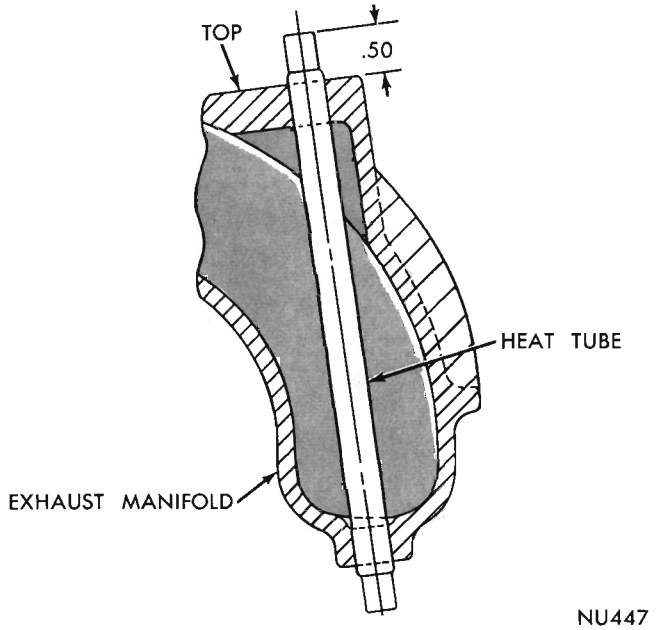

Fig. 30—Six Cylinder Exhaust and Heat Tube Cross-Section

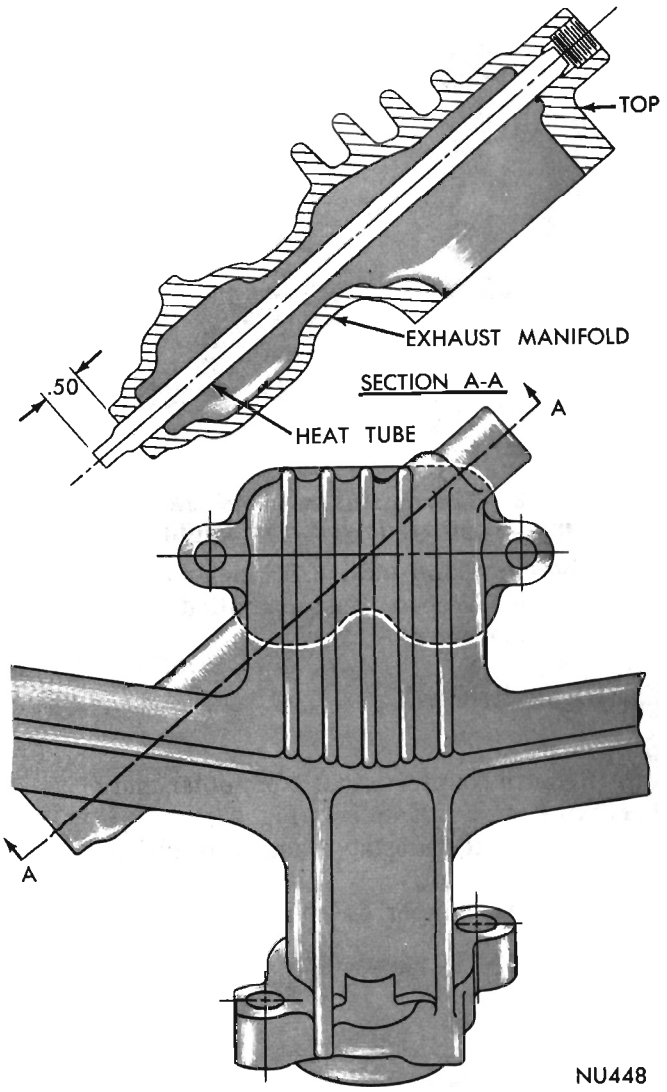

Fig. 31—Manifold and Heat Tube Assembly

ANTI-ICING TUBE

SIX CYLINDER

Removal

(1) With the exhaust manifold removed, use a letter "S" or 11/32 inch drill, drill out heat tube to a depth of .250 inch from top manifold surface. Use cutting oil as a lubricant for tube is stainless steel.

(2) Drive heat tube into manifold with a 5/16 inch pin punch and remove pieces through outlet.

(3) Repeat above steps for lower part of heat tube.

Installation

(1) Position heat tube in **bottom** side of manifold and press in heat tube (about 5-1/2 inches) until 1/2 inch protrudes out of top surface of manifold (Fig. 30). **Failure to install from bottom of manifold will destroy heat tube.**

EIGHT CYLINDER

Removal

(1) With the right exhaust manifold removed, use a letter "S" or a 11/32 inch drill, drill heat tube to a depth of .750 inch from top manifold surface. Use cutting oil as a lubricant for tube is stainless steel.

(2) Drive tube into manifold with a 5/16 inch pin punch and remove pieces through center exhaust ports.

(3) Repeat above steps for lower part of heat tube except drill to a depth of 1/4 inch below surface of manifold.

Installation

(1) Position taper end of heat tube in **bottom** side of manifold and **press** in heat tube (7-1/4 inches) until only 1/2 inch is left outside of bottom of manifold (Fig. 31). **Failure to install from bottom of manifold will destroy heat tube.**

TIGHTENING REFERENCE

	6-Cylinder		8-Cylinder	
	Ft. Lbs.	In. Lbs.	Ft. Lbs.	In. Lbs.
Exhaust Header Ball Joint Bolt Nut (426 Hemi Engine)			24	
Exhaust Manifold Brace Bolt Nut (273, 318 Cu. In. Engines)			30	
Exhaust Manifold to Cylinder Head Stud Nut 170, 225 Cu. In. Engines	10			
273 Cu. In. Engine			15	
318, 340, 383, 440 Cu. In. Engines			30	
Exhaust Manifold to Pipe Flange Ball Joint Bolt Nut			24	
Exhaust Pipe Flange Bolt Nut Single	35		35	
Dual			50	
Exhaust Pipe U-Bolt Nut		150		150
Heat Control Valve Counterweight Clamp Bolt Nut		50		50
Heat Tube Clamp Bolt Nut (426 Hemi Engine)				95
Heat Tube Screw and Stud Nut (426 Hemi Engine)				200
Intake Manifold to Cylinder Head Screw	10			
273 Cu. In. Engine			35	
318, 340 Cu. In. Engine			35	
383, 440 Cu. In. Engines			50	
Intake to Exhaust Manifold Screw	15			
Rear Muffler Support Bolt and Nut				200
Rear Muffler Support to Underbody Bolt (except Fury)		200		200
Tail Pipe Front Clamp Screws (Fury Models)		150		150
Tail Pipe Support to Underbody Bolt (except Fury)		200		200
Tail Pipe Support to Crossmember Screws (Fury Models)		200		200
Tail Pipe U-Bolt Nuts (426 Hemi Engine)				95

FUEL SYSTEM

CONTENTS

	Page		Page
AFB—SERIES CARBURETORS	44	FUEL PUMPS	69
AVS—SERIES CARBURETORS	34	FUEL TANKS	74
BBD—SERIES CARBURETORS	20-28	HOLLEY CARBURETOR	14-53
BBS—SERIES CARBURETORS	6	THROTTLE LINKAGE	80
DISTRIBUTOR CONTROL VALVE ADJUSTMENT	3	SERVICE DIAGNOSIS	4
		SPECIFICATIONS	83

GENERAL INFORMATION

The fuel system consists of the fuel tank, fuel pump, fuel filter, carburetor, fuel lines and vacuum lines.

The fuel tank assembly consists of the tank, filler neck cap, air vent, and a fuel gauge sending unit.

In operation, the fuel pump draws fuel from the tank and forces it to the filter and carburetor. The carburetor meters the fuel into the air stream drawn into the engine, in quantities suitable for all engine speed and load conditions.

The fuel filter is a paper element sealed, disposable type unit, located in the fuel line between the fuel pump and the carburetor. The filter unit should be replaced every 24,000 miles.

When checking parts removed from the carburetor, it is at times difficult to be sure they are satsfactory for further service. It is therefore recommended that in such case, new parts be installed.

Anti-Icing Device

All 170-225 Cu. In. engines and certain 318 Cu. In. engines are equipped with an anti-icing device to prevent ice formation on the throttle valves during warm-up.

When the air is very humid and at a temperature from freezing, and up to about 65 degrees F., moisture is condensed from the air and freezes on the throttle valve/or valves. This ice formation effectively blocks passage of air and the engine stalls.

To prevent ice formation and subsequent stalling, a heat tube is installed in the exhaust manifold and hoses connected from air cleaner and carburetor base, supplies preheated air on the throttle valves. No service procedures are required to maintain this device. Only periodic inspection is required to mantain efficient operation (Fig. 1).

SERVICING CARBURETOR

Often, the carburetor is blamed for a great variety of trouble which is classed as "POOR CAR PERFORMANCE." Therefore, be definitely sure that the trouble is not located elsewhere before disassembling the carburetor.

When overhauling the carburetor, several items of importance should be observed to assure a good job:

(1) The carburetor must be completely disassembled.

(2) All parts (except choke diaphragm assembly) should be cleaned in a suitable solvent then inspected for damage or wear.

(3) Use air pressure only, to clean the various orifices or channels.

(4) Replace questionable parts with NEW ONES.

CLEANING CARBURETOR PARTS

The recommended solvent for gum deposits is denatured alcohol which is easily obtainable. However, there are other commercial solvents which may be used with satisfactory results.

The choke diaphragm can be damaged by solvents. Avoid placing the diaphragm assembly in **ANY** liquid. Clean the external surfaces with a clean cloth or a soft wire brush. Shake dirt or other foreign material from the stem (plunger) side of the diaphragm. Depressing the stem to the retracted position, will pro-

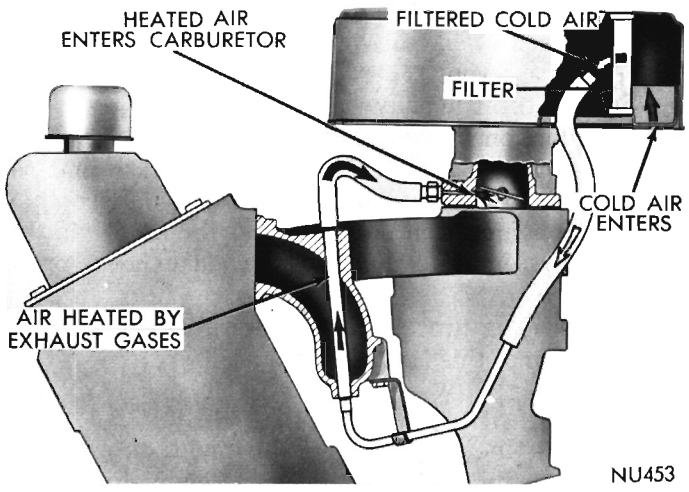

Fig. 1—Anti-Icing Device

vide an additional hole for the removal of dirt. Compressed air can be used to remove loose dirt **but should not be connected to the vacuum diaphragm fitting.**

IMPORTANT: If the commercial solvent or cleaner recommends the use of water as a rinse, it should be "HOT." After rinsing, all trace of water must be blown from the passages with air pressure. It is further advisable to rinse all parts in clean kerosene or gasoline to be certain no trace of moisture remains. Never clean jets with a wire, drill, or other mechanical means, because the orifices may become enlarged, making the mixture too rich for proper performance.

AUTOMATIC CHOKE—WELL TYPE

To function properly, it is important that all parts be clean and move freely. Other than an occasional cleaning, the choke requires no servicing. However, it is very important that the choke control unit work freely in the well and at the choke shaft. Move the choke rod up and down to check for free movement in the pivot. If the unit binds, a new choke unit should be installed. **The well type choke is serviced as an assembly. Do not attempt to repair or change the setting, unless authorized by service literature. Changes of the choke materially affect summer temperature cold starting and seldom are a satisfactory correction of driveability problems, which are generally associated with carburetors or vacuum diaphragms.**

When installing the well type choke unit, be certain that the coil housing does not contact the sides of the well in the exhaust manifold. Any contact at this point will affect choke operation. DO NOT lubricate any parts of the choke or the control unit. This causes an accumulation of dirt which will result in binding of the mechanism.

CLOSED CRANKCASE VENT SYSTEM

The closed crankcase ventilator valve is located in the crankcase vent tube cap and is connected to the carburetor throttle body via a rubber tube.

The function of the valve is to regulate the flow of unburned hydrocarbons from the crankcase and return them to the intake manifold. From here they enter the combustion chamber and then exit via the exhaust system as completely burned exhaust products.

For servicing procedures of this valve, refer to Engine Section of this Manual.

Idle Speed Adjustment (Curb Idle)

To make the idle speed adjustment on carburetors, secure an accurate ignition tachometer and a Sun Electric Combustion-Vacuum Unit, Model 80, Exhaust Condenser, Model EC, and Hose 669-14 or equivalent. (The above analyzer is recommended; however, other reliable makes of analyzers in good condition may be used.)

(1) Engine running at normal operating temperature, and timing checked to the specifications shown in the Electrical Group.

(2) Air Cleaner installed.

(3) Six cylinder engines only—turn headlights on high beam position.

(4) Automatic transmissions in neutral position (not in park position).

(5) On air conditioned cars, turn air conditioning **off.**

(6) Connect ignition tachometer.

(7) Insert probe of exhaust gas analyzer in the tail pipe as far as possible (2 ft. minimum distance). On dual exhaust cars use left side tail pipe (side opposite heat valve). It is very important that the probe and connecting tubing be free of leaks to prevent erroneous readings. If a garage exhaust system is used to conduct the exhaust gases away, a plenum chamber or other means must be used to reduce vacuum of the exhaust system to 1/2 inch water or less.

(8) Connect exhaust gas analyzer, warm up and calibrate according to manufacturer's instructions.

(9) Disconnect hose between distributor vacuum control valve and intake manifold.

(10) Set the idle speed to specified value for the specific engine-transmission combination as follows: **IMPORTANT: When adjusting mixture screws to obtain the air/fuel ratio specified, do not turn the mixture screw more than 1/16 turn at a time. The combustion analyzer is so sensitive that the ratio must be changed by very small increments if accurate readings are to be obtained. The meters read in air/fuel ratio so that a higher reading indicates a leaner mixture and vice versa.**

(a) Adjust each screw 1/16 turn richer (counterclockwise) and wait 10 seconds before reading the meter.

(b) If necessary, repeat step "a" until meter indicates a definite increase in richness (lower reading). This step is very important since the meter reverses its readings and indicates a richer mixture as the carburetor is leaned out if carburetor is set too lean.

(c) When it has been established that the meter is indicating a lower reading (richer mixture) when the idle mixture screws are turned in the richer direction, proceed to adjust the carburetor to give 14.2 air/fuel ratio, turning the screws counterclockwise (richer) to lower the meter reading and clockwise (leaner) to increase the meter reading. **Do not remove plastic cap in order to obtain an over-rich mixture.**

(d) If the idle speed changes as the mixture screws are turned, adjust the speed to the specified value and readjust the mixture as required so that 14.2 air/fuel ratio is obtained at the specified idle speed.

(11) Remove clamp from distributor vacuum valve hose. If idle speed changes materially, check and set valve as described under "Distributor Vacuum Control Valve Adjustment."

DISTRIBUTOR VACUUM CONTROL VALVE ADJUSTMENT (Fig. 2)

(170 Cu. In. Manual Transmission and Hemi 426 Engine, Manual and Automatic Transmission Only)

(1) Connect a tachometer to engine and warm engine up to normal operating temperature.

(2) Connect a vacuum gauge (0-30 in. mercury) to distributor vacuum tube. The tee should have same inside diameter as distributor vacuum tube.

(3) If carburetor is equipped with a dash pot, adjust it so that it does not contact throttle lever at curb idle.

(4) Clamp closed vacuum tube that connects vacuum valve to manifold vacuum.

(5) Remove distributor vacuum tube at distributor and clamp tube closed.

(6) Set basic ignition timing to manufacturers specifications*. The curb idle speed must be at specified rpm before timing is adjusted.

(7) Adjust carburetor to obtain specified engine speed and exhaust emission level. The distributor vacuum must be below 6 in. of mercury at curb idle.

(8) Remove clamps from vacuum tubes and reconnect vacuum tube to distributor. Remove vacuum valve cover (Fig. 2).

(9) Speed engine up to 2000 rpm in neutral and hold speed for approximately 5 seconds. Release throttle and observe distributor vacuum. When throttle is released, distributor vacuum should increase to above 16 inches of mercury and remain there for a minimum of 1 second. The distributor vacuum must fall below 6 inches of mercury within 3 seconds after throttle is released.

(10) Adjust valve if necessary. Turning spring end adjusting screw counterclockwise will increase time the distributor vacuum remains above 6 inches of mercury after throttle is released. One turn of adjusting screw will change valve setting by approximately 1/2 inch of mercury. If valve cannot be adjusted to specifications described in Step No. 9, replace valve (Fig. 2).

(11) Replace vacuum valve cover. Reset carburetor dash pot (if so equipped) and check valve performance as outlined in Step No. 9. If distributor vacuum does not fall below 6 inches of mercury within 4 seconds after throttle is released, readjust or replace dash pot.

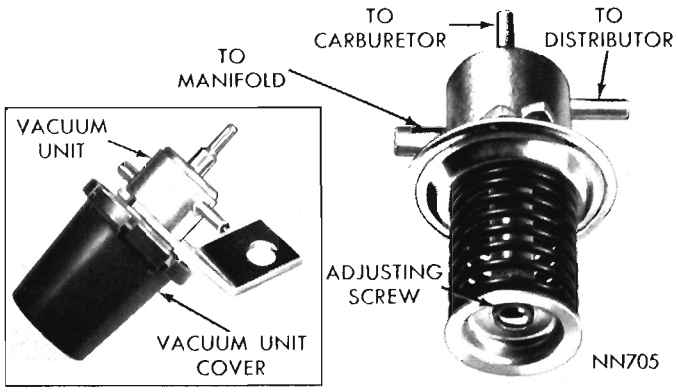

Fig. 2—Distributor Vacuum Control Valve Adjustment

ROUGH IDLE AND LOW SPEED SURGE

Rough idle and low speed surge on vehicles (using 1-1/2" BBD, AVS, and Holley 4160 carburetors) may be the result of improper idle setting balance between the right and left carburetor bores. To correct this condition the following steps should be followed.

(1) Remove the lead plugs from the two limiter screws in base of carburetor (1-1/2" BBD, and AVS) or the cup plugs in the sides of the primary metering block (Holley). A small drill and easy-out is a recommended method of removing lead plugs and a small sharp punch for cup plugs. (Fig. 1, BBD, AVS, and Holley).

(2) With engine thoroughly warmed up, install an approved exhaust gas analyzer for carburetor idle speed and mixture adjustment as described under "Idle Speed Adjustment".

(3) Turn the single idle adjusting screw counterclockwise (rich direction) until it is seated, then move it **3/4** turn clockwise (lean direction). Do not disturb this screw during the other steps of this procedure.

(4) With a narrow screw driver, turn the two idle limiter screws clockwise until they are both seated. These screws have prevailing torque features which may require rather high effort to turn screws. It is very important that this prevailing torque is overcome and the screws completely seat against idle discharge ports.

(5) Turn both idle limiter screws **1-1/2** turns counterclockwise for 1-1/2" BBD carburetors and 2 to 3 turns counterclockwise for AVS carburetors as a starting point (experience may dictate more or less turns as a rough setting but both screws should be turned equally).

(6) Start engine and set specified idle speed for engines with 300 or more miles. Set 75 rpm below

* Refer to Distributor Specifications, Electrical Group.

specifications if under 50 miles or 50 rpm below specifications if 50 to 300 miles are on engine.

(7) Observe air/fuel ratio reading of exhaust gas analyzer. Turn each screw 1/16" turn richer (counterclockwise) and note change in air/fuel meter reading. From this point on, follow instructions for idle setting until 14.2 air/fuel ratio is obtained at appropriate idle speed. It is very important that both idle limiter screws be turned the same amount on each adjustment so that as finally set both screws will be the same number of turns from the seated position.

(8) Install lead plugs or cup plugs over limiter screws.

SERVICE DIAGNOSIS

Condition	Possible Cause	Correction
POOR IDLING	(a) Idle air bleed carbonized or of incorrect size.	(a) Disassemble carburetor. Then, use compressed air to clear idle bleed after soaking it in a suitable solvent.
	(b) Idle discharge holes plugged or gummed.	(b) Disassemble carburetor. Then, use compressed air to clear idle discharge holes after soaking main and throttle bodies in a suitable solvent.
	(c) Throttle body carbonized or worn throttle shaft.	(c) Disassemble carburetor. Check throttle valve shaft for wear. If excessive wear is apparent, replace throttle body assembly.
	(d) Damaged or worn idle mixture needle.	(d) Replace throttle body assembly.
	(e) Low grade fuel or incorrect float level.	(e) Test fuel level in carburetor. Adjust as necessary to obtain correct float level.
	(f) Loose main body to throttle body screws.	(f) Tighten main body to throttle body screws securely to prevent air leaks.
	(g) Worn or corroded needle valve and seat.	(g) Clean and inspect needle valve and seat. If found to be in questionable condition, replace assembly. Then, test fuel pump pressure. Refer to Specifications for correct fuel pump pressure.
POOR ACCELERATION	(a) Accelerator pump piston (or plunger) leather too hard, worn, or loose on stem.	(a) Disassemble carburetor. Replace accelerator pump assembly if leather is hard, cracked or worn. Test follow-up spring for compression.
	(b) Faulty accelerator pump discharge ball.	(b) Disassemble carburetor. Use compressed air to clean discharge nozzle and channels after soaking main body in a suitable solvent. Test fuel pump capacity.
	(c) Faulty accelerator pump inlet check ball.	(c) Disassemble carburetor. Check accelerator pump inlet, check ball for poor seat or release. If part is faulty, replace.
	(d) Incorrect fuel or float level.	(d) Test fuel or float level in carburetor. Adjust as necessary to obtain correct float level.
	(e) Worn accelerator pump and throttle linkage.	(e) Disassemble carburetor. Replace worn accelerator pump and throttle linkage and measure for correct position.
	(f) Manifold heat valve sticking.	(f) Free up manifold heat control valve, using recommended solvent.
CARBURETOR FLOODS OR LEAKS	(a) Cracked body.	(a) Disassemble carburetor. Replace cracked body. Make sure main to throttle body screws are tight.
	(b) Faulty body gaskets.	(b) Disassemble carburetor. Replace defective gaskets and test for leakage. Be sure screws are tightened securely.

Condition	Possible Cause	Correction
	(c) High float level.	(c) Test fuel level in carburetor. Make necessary adjustment to obtain correct float level.
	(d) Worn needle valve and seat.	(d) Clean and inspect needle valve and seat. If found to be in a questionable condition, replace complete assembly and test fuel pump pressure. Refer to specifications for correct fuel pump pressure.
	(e) Excessive fuel pump pressure.	(e) Test fuel pump pressure. If pressure is in excess of recommended pressure (refer to Specifications), replace fuel pump.
POOR PERFORMANCE MIXTURE TOO RICH	(a) Restricted air cleaner.	(a) Remove and clean air cleaner or replace element.
	(b) Leaking float.	(b) Disassemble carburetor. Replace leaking float. Test float level and correct as necessary, to proper level.
	(c) High float level.	(c) Adjust float level as necessary to secure proper level.
	(d) Excessive fuel pump pressure.	(d) Test fuel pump pressure. Refer to specifications for recommended pressure. If pressure is in excess of recommended pressure, replace fuel pump assembly.
	(e) Worn metering jet.	(e) Disassemble carburetor. Replace worn metering jet, using a new jet of the correct size and type.
CARBURETOR MIXTURES LEAN	(a) Air leak bypassing carburetor.	(a) Repair.
ENGINE RUNS EXCESSIVELY RICH AFTER COLD START		
CHOKE SYSTEM RICH	(a) Choke thermostat adjustment richer than specified.	(a) Correct.
	(b) Choke thermostat distorted rich by overheating.	(b) Replace, since this problem can be corrected by use of proper choke assembly.
	(c) Choke vacuum diaphragm inoperative or misadjusted.	(c) Correct or replace.
	(d) Choke vacuum passage blocked or leaking.	(d) Correct.
CARBURETOR RICH	(a) Incorrect gasket or gasket installation between carburetor and intake manifold.	(a) Replace or correct.
EXCESSIVE STALLS AFTER COLD START		
	(a) Choke System Lean.	(a) Check items under "Pooor Starting—Choke Valve Fails to Close."
	(b) Choke vacuum diaphragm adjustment lean.	(b) Adjust to specifications.
ENGINE OUTPUT LOW	(a) Fast idle speed low.	(a) Adjust to specification.
	(b) Fast idle cam position adjustment incorrect.	(b) Adjust to Specifications.
	(c) Engine lubrication oil of incorrect viscosity.	(c) Recommend No. 5W-20.
CARBURETOR LEAN	(a) Curb idle set very lean. (CAP Carbs.)	(a) Adjust to CAP Specifications.
	(b) Air leak bypassing the carburetor.	(b) Repair.
POOR COLD ENGINE STARTING		
INCORRECT PROCEDURE	(a) (See Owners Manual).	(a) Instruct owner.

Condition	Possible Cause	Correction
CHOKE VALVE FAILS TO CLOSE	(a) Choke thermostat adjustment leaner than specified.	(a) Adjust.
	(b) Choke thermostat corroded such that it has cracked and distorted lean.	(b) Replace assembly.
	(c) Choke linkage, shaft or related parts corroded, bent or dirty such that the system is not entirely free to move from the open to the closed position.	(c) Repair, clean or replace.
	(d) Choke valve improperly seated.	(d) Reseat valve.
	(e) Air cleaner interferes with choke shaft or linkage.	(e) Rotate cleaner to correct position, instruct owner.
	(f) Air cleaner gasket interferes with choke valve or linkage.	(f) Reinstall gasket properly.
LOW ENGINE OUTPUT (10°F or lower)	(a) Engine lubricating oil incorrect viscosity.	(a) Recommended 5W-20.
	(b) Valve lash incorrect.	(b) Readjust.
	(c) Choke thermostat adjustment incorrect, rich.	(c) Adjust to correct setting.
ENGINE RUNS LEAN, FIRST HALF MILE		
CHOKE LEAN	(a) Check items under (Poor Starting).	(a) See "Choke Valve Fails to Close."
	(b) Diaphragm adjustment lean.	(b) Readjust to specification.
ENGINE RUNS LEAN AFTER HALF MILE		
ENGINE HEAT INSUFFICIENT	(a) Heat valve stuck open.	(a) Free with solvent.
	(b) Heat valve thermostat distorted.	(b) Replace thermostat.
	(c) Heat valve failed within exhaust. See engine section for proper diagnosis.	(c) Replace heat valve.
	(d) Water temperature sub-normal.	(d) Check thermostat.

BBS SERIES CARBURETOR

INDEX

	Page
Automatic Choke (well type)	2
Carburetor Adjustments	11
Accelerator Pump and Bowl Vent	11
Choke Vacuum Kick	12
Fast Idle Cam Position	11
Fast Idle Speed (On Vehicle)	12
Choke Unloader (Wide Open Kick)	12
Idle Speed Adjustment	11
Dash Pot Adjustment	13
Checking Float Setting (On Vehicle)	14
Cleaning Carburetor Parts	1
Closed Crankcase Vent System	2
Disassembling Carburetor	7
General Information	6
Inspection and Reassembly	8
Specifications	83

GENERAL INFORMATION

The Ball and Ball single throat carburetor models BBS-4601S and BBS-4602S are used on the 170 cu. in. engine when the vehicles are equipped with a manual or automatic transmission respectively. (See Specifications) (Figs. 1 or 2).

The dash pot is mounted on the carburetor air horn attaching screws and retards the return of the throttle to idle position. **The proper adjustment of the dash pot is very important!** (See Carburetor Adjustments.)

Since the service procedures are identical on all BBS carburetors, the illustrations showing the various disassembly procedures will not always show any one specific carburetor.

The spring staged choke, (Fig. 1) is a device incorporated in the choke mechanism which limits the choke blade closing torque when cranking the engine at temperatures below zero. Thus the spring staging of the choke is a better match for the engine's starting mixture requirements at the low temperatures.

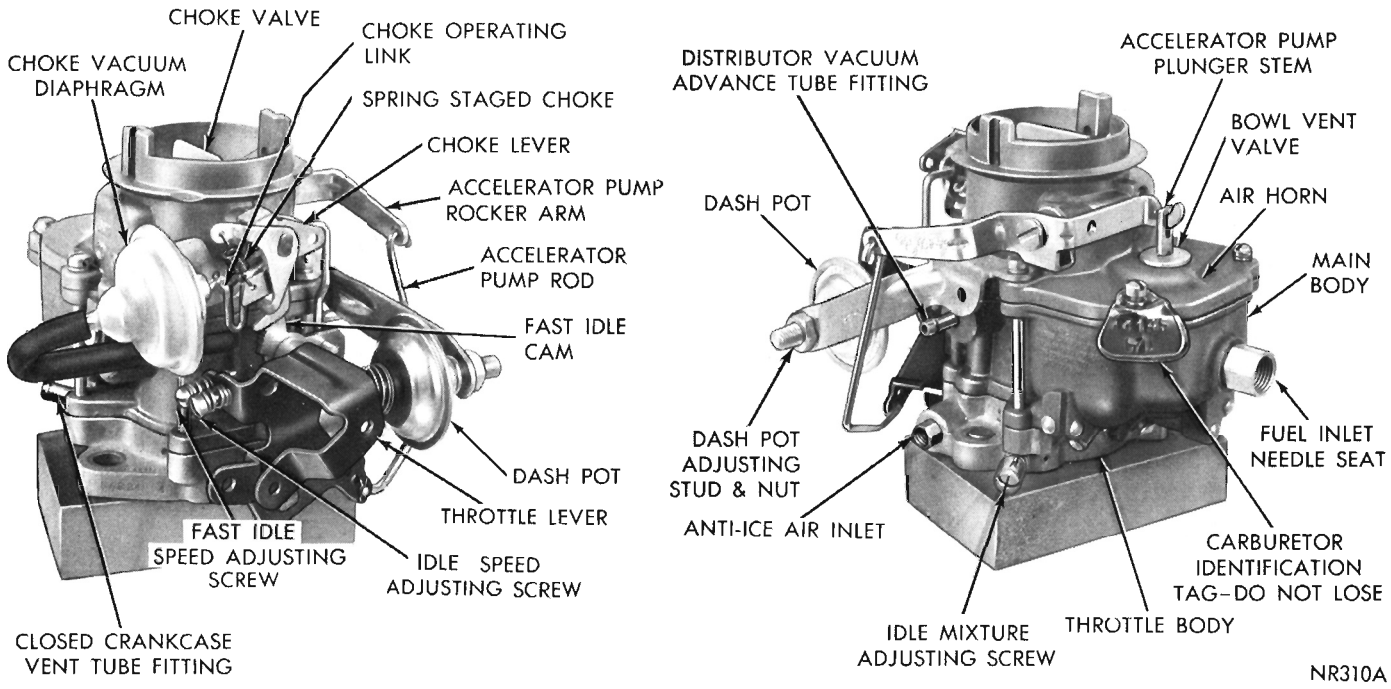

Fig. 1—Carburetor Assembly (BBS-4601S)

SERVICE PROCEDURES

DISASSEMBLING CARBURETOR (Figs. 1 or 2)

(1) Place carburetor assembly on repair block, Tool C-3225.

(2) Remove hairpin clip and disengage accelerator pump operating rod.

(3) Remove vacuum hose between carburetor main body and vacuum diaphragm.

(4) Remove clip from choke operating link and disengage link from diaphragm plunger (stem) and choke lever. (Fig. 1).

(5) Remove vacuum diaphragm and bracket assembly and place to one side to be cleaned as a special item. A liquid cleaner may damage diaphragm material.

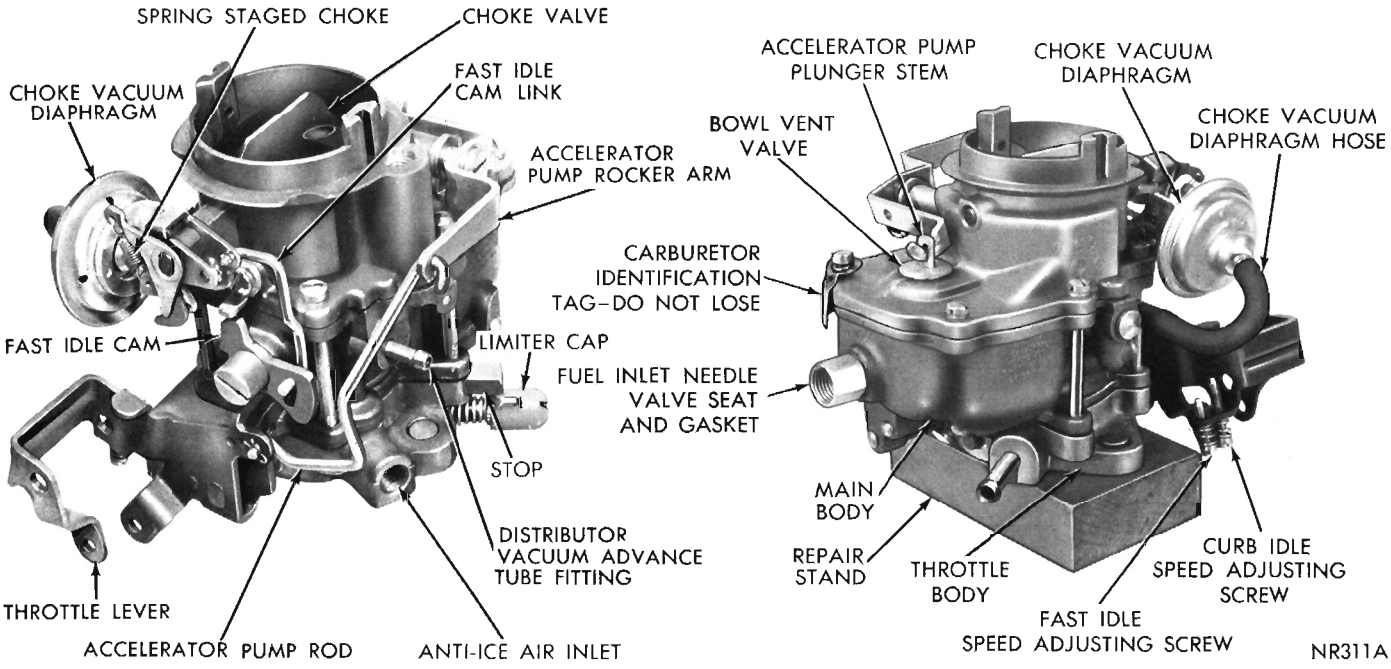

Fig. 2—Carburetor Assembly (BBS-4602S)

(6) Remove air horn retaining screws. Remove dash pot.

(7) Tilt air horn toward throttle lever far enough to disengage fast idle cam link from the fast idle cam, (Fig. 3). Lift air horn up and away from main body. Discard gasket.

(8) Disengage accelerator pump plunger from rocker arm, by pushing up on bottom of plunger and sliding plunger shaft off hook. Slide plunger out of air horn and remove bowl vent valve, spring seat and spring. If old plunger can be used again, or if a new plunger is to be installed, place plunger in a jar of clean gasoline or kerosene to prevent leather from drying out.

(9) Remove fuel inlet needle valve, seat and gasket from main body.

(10) Lift out float fulcrum pin retainer, then lift out floats and fulcrum pin.

(11) Remove step-up piston retaining screw, and slide step-up piston and rod out of well, (Fig. 4). Now lift out the step-up piston spring. Remove step-up piston gasket from bottom of the well.

(12) Remove main metering jet (Fig. 5).

(13) Unscrew and remove idle orifice tube (Fig. 6).

(14) Invert carburetor and drop out accelerator pump check balls from their respective seats.

(15) Using Tool T109-43 plug remover, remove accelerator pump jet plug. Using Tool T109-59T, remove accelerator pump jet, (Fig. 7).

(16) Remove white plastic limiter cap from idle air mixture screw. (Be sure and count number of turns to seat screw, as the same number of turns (from the seat) must be maintained at installation.) Remove screw and spring from throttle body.

The carburetor now has been disassembled into three main units; air horn, main body and throttle body and the component parts of each disassembled as far as necessary for cleaning and inspection.

It is usually not advisable to remove the throttle shaft or valve from the throttle body, unless wear or damage necessitates the installation of new parts.

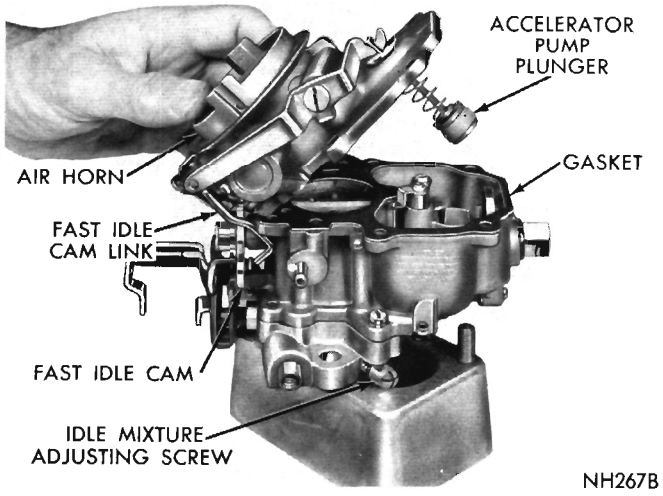

Fig. 3—Removing or Installing Air Horn

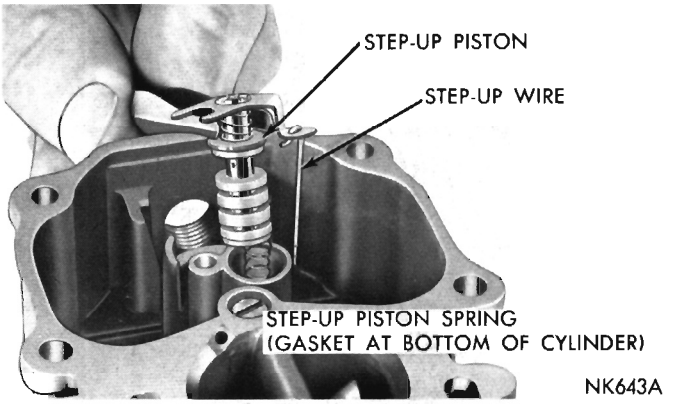

Fig. 4—Removing or Installing Step-up Piston

INSPECTION AND REASSEMBLY

Throttle Body

(1) Check throttle shaft for excessive wear in the throttle body. If wear is extreme, it is recommended that throttle body assembly be replaced rather than installing a new shaft in the old body.

During manufacture, location of idle transfer port and spark advance control ports to the throttle valve is carefully established for one particular assembly. (Fig. 8).

If a new shaft should be installed in an old, worn throttle body, it would be very unlikely that the original relationship of the ports to the valve would be obtained. Changing the relationship of the valve to the ports would adversely affect normal car operation between the speeds of 15 and 30 miles per hour. If a new shaft or valve is to be installed, adhere to the following instructions:

(2) Mark position of throttle valve in bore, so that it can be reinstalled in the same position.

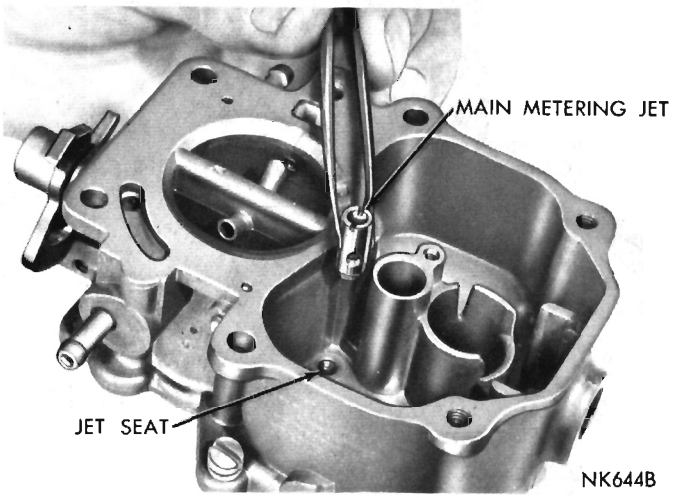

Fig. 5—Removing or Installing Main Metering Jet

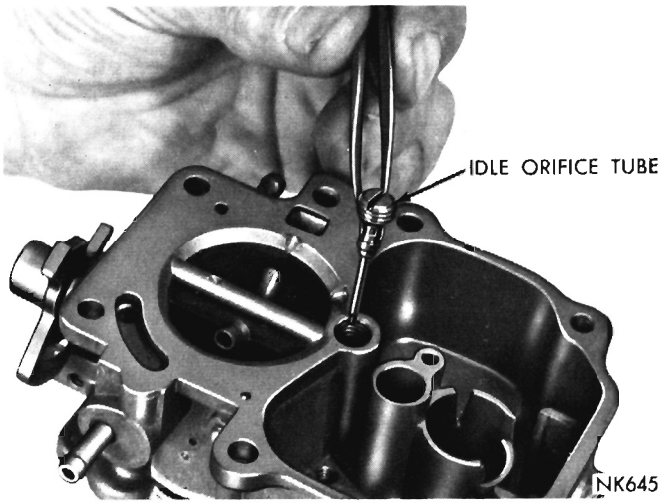

Fig. 6—Removing or Installing Idle Orifice Tube

(3) Remove screws that hold throttle valve to shaft, then slide valve out of bore.

CAUTION: These screws are staked on the opposite side and care should be used at removal so as not to break off in the shaft.

(4) Slide throttle shaft out of throttle body.

(5) Install new throttle shaft and lever (or new valve).

(6) Install NEW screws but do not tighten. Hold valve in place, with fingers pressing on high side of valve. Tap valve lightly with a screwdriver to seat in throttle bore. Tighten screws lightly. Hold up to a strong light to check for proper position in bore. (The valve may have to be rotated slightly as it is eliptical.) When properly positioned, tighten screws securely and stake, using pliers.

(7) Install idle mixture screw and spring in body. (The tapered portion must be straight and smooth. If tapered portion is grooved or ridged, a new idle mixture screw should be installed to insure having correct idle mixture control.) DO NOT USE A SCREW DRIVER. Turn screw lightly against its seat with the fingers. Back off number of turns counted at disassembly. Install new plastic cap (blue) with tab against stop.

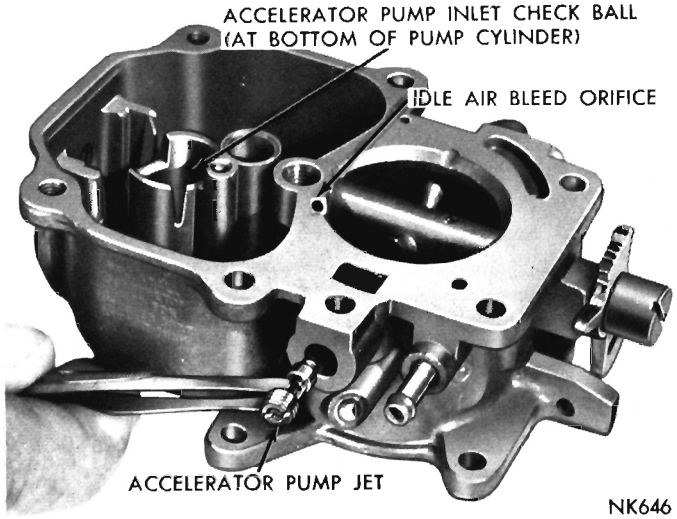

Fig. 7—Removing or Installing Accelerator Pump Jet

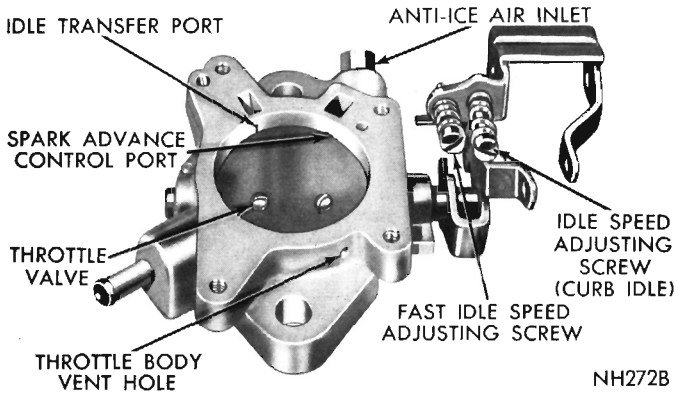

Fig. 8—Ports in Relation to Throttle Valve

Main Body

(1) Install accelerator pump discharge and intake check balls in their respective passages, (Fig. 9).

To check accelerator pump system; fuel inlet and discharge check balls proceed as follows:

(2) Pour clean gasoline into carburetor bowl, approximately 1/2 inch deep. Remove pump plunger from jar of gasoline and slide down into pump cylinder. Raise plunger and press lightly on plunger shaft to expel air from pump passage.

(3) Using a small clean brass rod, hold discharge check ball down firmly on its seat. Again raise plunger and press downward. No fuel should be emitted from either intake or discharge passage, (Fig. 10).

If any fuel does emit from either passage, it indicates the presence of dirt or a damaged check ball. Clean the passage again and repeat test. If leakage is still evident, install a NEW check ball. The fuel inlet

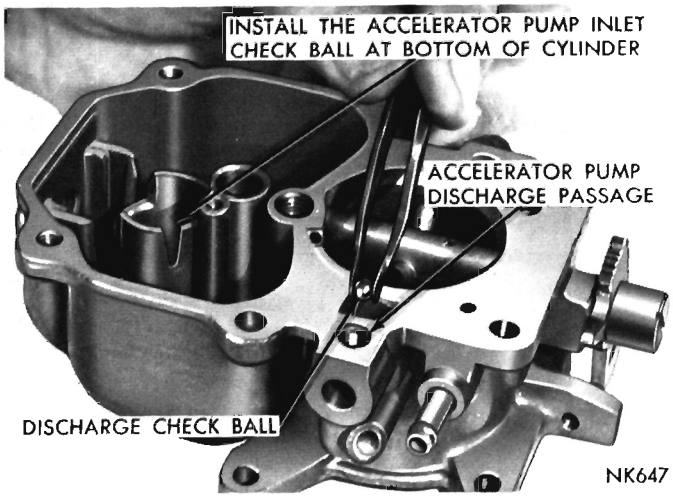

Fig. 9—Installing Accelerator Pump Discharge and Intake Check Balls

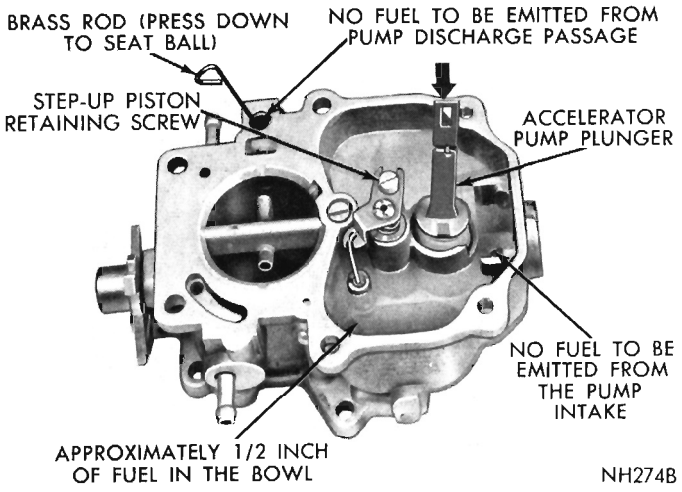

Fig. 10—Testing Accelerator Pump Intake and Discharge Check Balls

check ball is located at the bottom of the plunger well.

(4) Install accelerator pump jet, (Fig. 7). Tighten securely, using Tool T109-59T. Install a new plug and drive tightly in place.

(5) Install idle orifice tube, (Fig. 6). Tighten securely.

(6) Install main metering jet (Fig. 5). Tighten securely.

(7) Before installing step-up piston, be sure step-up rod is able to move freely each side of vertical position, (Fig. 11). The step-up rod must be straight and smooth.

(8) Slide step-up piston gasket down into position in piston well, then install step-up piston spring and step-up piston and rod (Fig. 4). Install retaining screw and tighten securely. Carefully guide step-up rod into main metering jet. Be sure step-up piston slides freely in its cylinder. A step-up piston stuck in **UP** position will cause a rich mixture at part throttle, whereas a piston stuck in **DOWN** position will cause a lean mixture at wide open throttle and poor acceleration.

Checking Float Setting

The carburetors are equipped with a synthetic rubber tipped fuel inlet needle. The needle tip is a rubber material which is not affected by gasoline and is stable over a wide range of temperatures. The tip is flexible enough to make a good seal on the needle seat.

The use of the new inlet needle requires a new procedure in adjusting the float setting. Care should be taken to perform this operation accurately in order to secure the best performance and fuel economy.

To correctly set the float height, when the carburetor is being overhauled, proceed as follows:

(1) Install floats with fulcrum pin and pin retainer in main body.

(2) Install needle, seat and gasket in body and tighten securely.

(3) Invert main body so that weight of floats **only,** is forcing needle against seat. Hold finger against retainer to fully seat fulcrum pin.

(4) Using Tool T109-282, or a T scale, check float, (Fig. 12). There should be 1/4 inch from surface of fuel bowl to crown of each float at center.

If an adjustment is necessary, bend the lip of float lever either in or out until correct setting has been obtained.

CAUTION: Do not attempt to change the setting without removing the float, as the synthetic rubber tip can be compressed sufficiently to cause a false setting which will affect correct level of fuel in the bowl. After being compressed, the tip is very slow to recover its original shape. Recheck as described in step 4 above.

It is very important that the float lip be perpendicular to the needle or slanted not more than 10 degrees away from the needle when the float is set correctly.

(5) Place a new gasket on throttle body and position main body making sure they are aligned.

Air Horn

Check freedom of choke mechanism in the air horn. The shaft must float free to operate correctly.

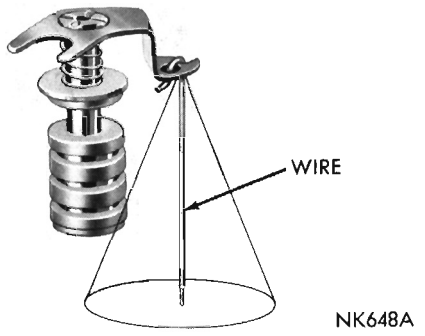

Fig. 11—Step-up Piston Wire Free Play

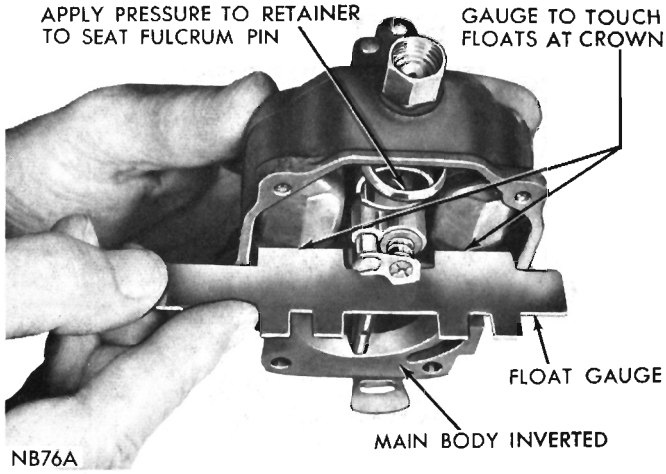

Fig. 12—Checking Float Setting

(1) Assemble pump plunger, spring and spring seat and slide plunger shank through opening in air horn. Install bowl vent cap over plunger shank, then engage with pump rocker arm. Be sure hairpin clip is in the lower position on plunger rod. (See step No. 4 below.)

(2) Place a new gasket on main body, then install air horn by tilting air horn, (Fig. 3), in order to engage fast idle link with fast idle cam. After engaging link, slowly lower air horn and at same time guide accelerator plunger into its well. Install dash pot.

(3) Install air horn attaching screws. Tighten securely.

(4) Install accelerator pump operating rod and secure with hairpin clip. Normal operation of accelerator pump is obtained by installing pump rod in long stroke or outer hole of throttle arm. The three grooves in plunger stem correspond to three holes in the throttle lever. This ratio must be maintained for correct pump operation.

Choke Vacuum Diaphragm

Inspect the vacuum diaphragm fitting to be sure that the passage is not plugged with foreign material. Leak test diaphragm to determine if it has internal leaks. To do this, depress diaphragm stem, then place a finger over fitting to seal opening. Release stem. If stem moves more than 1/16 inch in 10 (ten) seconds, leakage is excessive and the assembly must be replaced.

Install the diaphragm on the carburetor as follows:

(1) Place diaphragm on mounting surface. Install and tighten attaching screws securely.

(2) Install choke operating link in position between the diaphragm plunger (stem) and choke lever. Install clip to secure.

(3) Inspect rubber hose for cracks before placing it on correct carburetor fitting. **Do not connect vacuum hose to diaphragm fitting until after vacuum kick adjustment has been made.** (See Carburetor Adjustments.)

CARBURETOR ADJUSTMENTS

It is very important that the following adjustments be made on a reconditioned carburetor, and in the sequence listed:

Accelerator Pump and Bowl Vent

When assembling the accelerator pump to the air horn, note that the hairpin clip (which opens the bowl vent) can be placed in any one of three positioning notches. These notches correspond to the long, medium and short pump stroke holes in the throttle lever.

(Refer to Air Horn Paragraph for correct position of the pump stem clip and the pump rod.)

The proper procedure is to adjust the amount of bowl vent opening instead of measuring and setting the height of the pump plunger.

To check or set the adjustment, proceed as follows:

(1) Back off idle speed adjusting screw. Open choke valve, so that when throttle valves are closed, fast idle adjusting screw will not contact fast idle cam.

(2) Be sure pump operating rod is in the correct stroke hole in throttle lever, and that bowl vent clip on pump stem is in proper location.

(3) Close throttle valves tightly. It should be just possible to insert a 1/16 inch drill (.060) between bowl vent and air horn, (Fig. 13).

If an adjustment is necessary, bend the pump operating rod, using Tool T109-213, at the lower angle, until correct bowl vent opening has been obtained.

This is an important adjustment, since too much lift at the bowl vent will result in considerable loss in low speed fuel economy.

Remember that if the pump operating rod is moved to either the short or long stroke position, a corresponding change must be made in the location of the bowl vent clip, and the amount of lift of the bowl vent rechecked and adjusted.

The accelerator pump travel is automatically taken care of when the bowl vent is properly adjusted.

Fast Idle Speed and Cam Position Adjustment

The fast idle engine speed adjustment should be made on the vehicle, as described in the Fast Idle Speed Adjustment (On the Vehicle) Paragraph. However, the Fast Idle Cam Position Adjustment can be made on the bench. This adjustment is important to assure that the speeds of each cam step occur at the proper time during engine warm-up. Adjust as follows:

(1) With fast idle speed adjusting screw contacting second highest step on fast idle cam, move choke

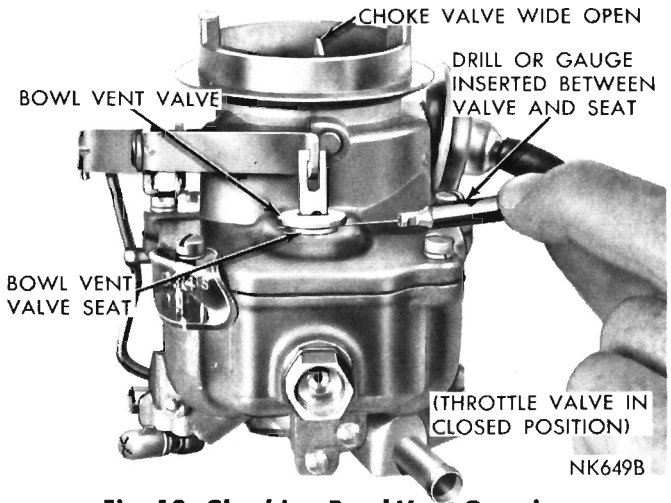

Fig. 13—Checking Bowl Vent Opening

valve toward closed position with light pressure on choke shaft lever.

(2) Insert specified drill between choke valve and wall of air horn (See Specifications at rear of Fuel System Group).

(3) If an adjustment is necessary, bend fast idle rod at upper angle, using Tool T109-213, until correct valve opening has been obtained. (Fig. 14).

Vacuum Kick Adjustment—(This test can be made ON or OFF vehicle.)

The choke diaphragm adjustment controls the fuel delivery while the engine is running. It positions the choke valve within the air horn by action of the linkage between the choke shaft and the diaphragm. The diaphragm must be energized to measure the vacuum kick adjustment. Use either a distributor test machine with a vacuum source, or vacuum supplied by the vehicle. Adjust as follows:

(1) If adjustment is to be made with engine running, back off fast idle speed screw until choke can be closed to the kick position with engine at curb idle. (Note number of screw turns required so that fast idle can be returned to original adjustment). If an auxiliary vacuum source is to be used, open throttle valve (engine not running) and move choke to closed position. Release throttle first, then release choke.

(2) When using an auxiliary vacuum source, disconnect vacuum hose from carburetor and connect it to hose from vacuum supply with a small length of tube to act as a fitting. Removal of hose from diaphragm may require forces which damage the system. Apply a vacuum of 10 or more inches of mercury.

(3) Insert specified drill (refer to Specifications) between choke valve and wall of air horn (Fig. 15). Apply sufficient closing pressure on lever to which choke rod attaches to provide a minimum choke valve opening without distortion of diaphragm link. Note that the cylindrical stem of diaphragm will extend as

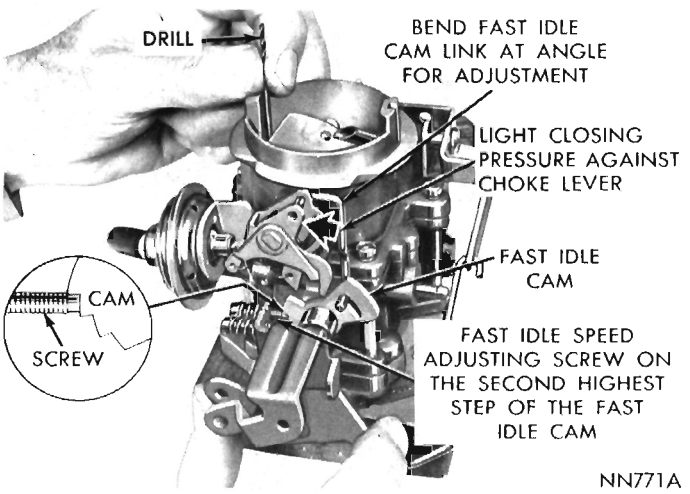

Fig. 14—Fast Idle Cam Position Adjustment

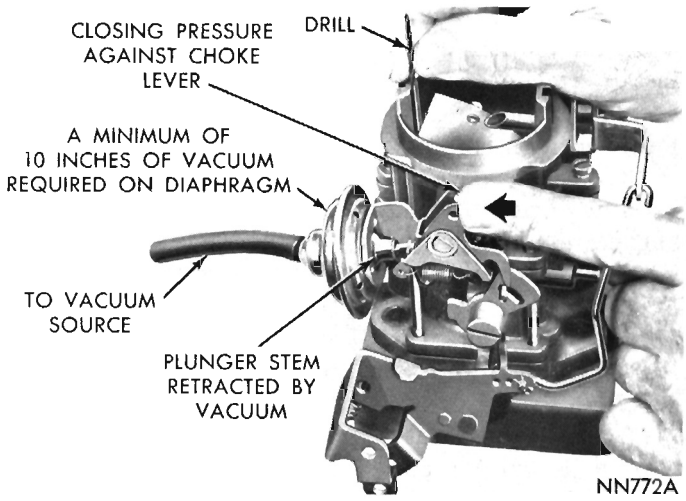

Fig. 15—Vacuum Kick Adjustment

internal spring is compressed. This spring must be fully compressed for proper measurement of vacuum kick adjustment.

(4) An adjustment will be necessary if a slight drag is not obtained as drill is being removed. Shorten or lengthen diaphragm link to obtain correct choke opening. Length changes should be made carefully by bending (open or closing) the bend provided in diaphragm link. **CAUTION: DO NOT APPLY TWISTING OR BENDING FORCE TO DIAPHRAGM.**

(5) Reinstall vacuum hose on correct carburetor fitting. Return fast idle screw to its origianl location if disturbed as suggested in Step No. 1.

(6) Make following check. With no vacuum applied to diaphragm, the **CHOKE VALVE SHOULD MOVE FREELY** between open and closed positions. If movement is not free, examine linkage for misalignment or interferences caused by bending operation. Repeat adjustment if necessary to provide proper link operation.

Choke Unloader (Wide Open Kick)

The choke unloader is a mechanical device to partially open the choke valve at wide open throttle. It is used to eliminate choke enrichment during cranking of an engine. Engines which have been flooded or stalled by excessive choke enrichment can be cleared by use of the unloader. Adjust the choke unloader as follows:

(1) Hold throttle valve in wide open position. Insert specified drill (see Specifications) between upper edge of choke valve and inner wall of air horn.

(2) With a finger lightly pressing shaft lever. A slight drag should be felt as drill is being withdrawn. If an adjustment is necessary, bend unloader tang on throttle lever until correct opening has been obtained. (Fig. 16.)

Fast Idle Speed Adjustment (On Vehicle)

Fast idle engine speed is used to overcome cold

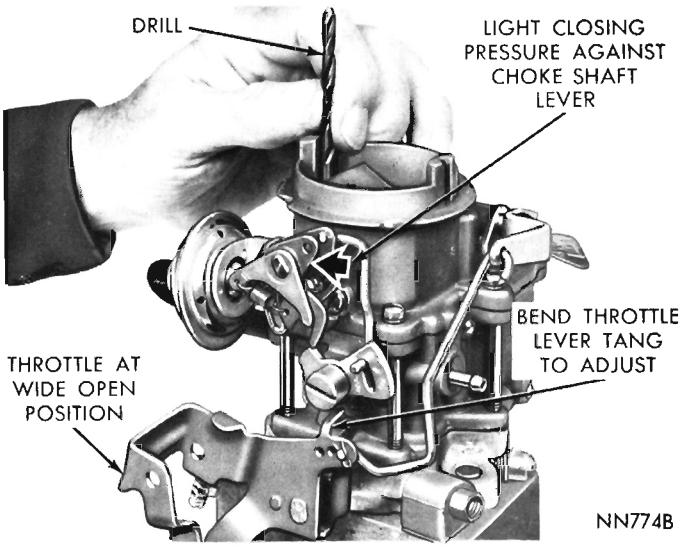

Fig. 16—Checking Choke Unloader Setting (Wide Open Kick)

engine friction, stalls after cold starts and stalls because of carburetor icing. Set this adjustment after the vehicle odometer indicates over 500 miles to insure a normal engine friction level. Prepare engine by driving at least 5 miles. Connect a tachometer and set the curb idle speed and mixture, then proceed as follows:

(1) With engine off and transmission in PARK or NEUTRAL position, open throttle slightly.

(2) Canadian Carburetors, close choke valve about 20° (degrees), then allow throttle to close. The fast idle speed screw should rest on the slowest-speed step of fast idle cam (Fig. 17).

(3) U.S. Carburetors, close choke valve until fast idle screw can be positioned on second highest-speed step of fast idle cam (Fig. 17).

(4) Start engine and determine stabilized speed. Turn fast idle speed screw in or out to secure specified speed. (See Specifications.)

(5) Stopping engine between adjustments is not necessary. However, reposition fast idle speed screw on cam after each speed adjustment to provide correct throttle closing torque.

Before adjusting idle and/or fast idle speeds and mixtures, make sure that the basic timing and the distributor control valve are correctly adjusted, as outlined under Idle Speed Adjustment (Curb Idle).

Spring Staged Choke Adjustment (Fig. 18)

(1) Push on hub lever with finger, at closed choke position. A small opening should exist between shaft and hub levers, (Fig. 18).

(2) Using a drill or gauge, measure opening. The opening should be from .010 to .040 inches.

(3) If an adjustment is necessary, bend hub lever tang until correct opening has been obtained.

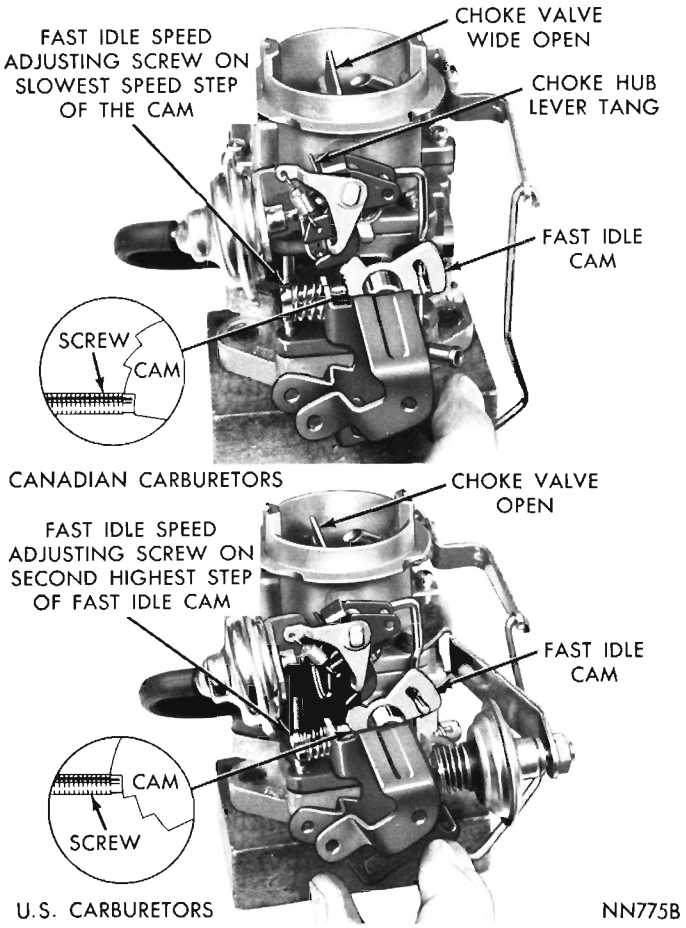

Fig. 17—Fast Idle Speed Adjustment (On Vehicle)

Idle Speed Adjustment (Curb Idle)

(Refer to General Information at Front of Section.)

Dashpot Setting and Adjustment

With the curb idle speed and mixture properly set and a tachometer installed, position the throttle lever so that the actuating tab on the lever is contacting the stem of the dashpot but not depressing it. The tachometer should read 2000 rpm if the setting is cor-

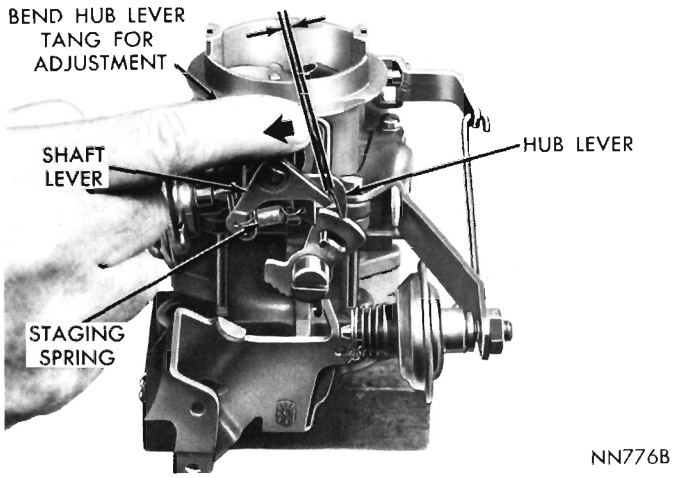

Fig. 18—Spring Staged Choke Adjustment

rect. To adjust the setting if necessary, screw the dashpot in or out as required. When the desired setting is obtained, tighten the lock nut on the dashpot against the bracket.

Checking the Float Setting (On the Vehicle)

(1) Remove accelerator pump operating rod.

(2) Remove two long air horn attaching screws and two short screws, then install two short screws in place of two long screws removed. This will hold main body to throttle body. Tighten screws securely.

(3) Remove remaining air horn screws, then tilt air horn far enough to disengage fast idle cam link from fast idle cam. Remove air horn and gasket.

Check float setting as follows:

(4) Seat float fulcrum pin by pressing on fulcrum pin retainer.

There should be enough fuel in the bowl to raise float so that lip bears firmly against needle. Additional fuel may be admitted by slightly depressing float. If the fuel pressure in line is insufficient to force additional fuel into the bowl, add the necessary fuel from a clean container.

CAUTION: Since the manifolds may be hot, it is dangerous to spill fuel on these surfaces. Therefore, take the necessary precautions to avoid spillage.

(5) With only pressure of buoyant float holding float lip against inlet needle, check float setting, using Tool T109-282 or a "T" scale. There should be 1/4 inch from surface of bowl (gasket removed) to crown of floats at center.

If an adjustment is necessary, hold the float on the bottom of the bowl, then bend the float lip toward or away from the needle. Recheck the 1/4 inch setting again, then repeat the lip bending operation as required.

CAUTION: When bending the float lip, do not allow the lip to push against the needle as the tip can be compressed sufficiently to cause a false setting which will affect correct level of the fuel in the bowl.

After being compressed, the tip is very slow to recover its original shape.

It is very important that the float lip be perpendicular to the needle or slanted not more than 10 degrees away from the needle when the float is correctly set.

(6) Reassemble air horn as described previously.

To set the idle speed, refer to the Fuel System General Information Paragraph.

HOLLEY MODEL NO. 1920

SERIES CARBURETOR

INDEX

	Page
Automatic Choke (well type)	2
Carburetor Adjustments	18
Accelerator Pump and Bowl Vent	20
Choke Vacuum Kick	18
Fast Idle Cam Position	18
Fast Idle Speed (On Vehicle)	19
Idle Speed Adjustment	19
Dashpot Adjustment	20
Cleaning Carburetor Parts	1
Closed Crankcase Vent System	2
Disassembling Carburetor	15
General Information	14
Inspection and Reassembly	16
Specifications	84

GENERAL INFORMATION

The Holley carburetor model R-4165A used on the 225 cu. in. engine, when the vehicles are equipped with an automatic or manual transmission (Fig. 1). (Taxi Application.) Holley carburetor models R-4161A and R-4163A are used on the 225 cu. in. engine, when the vehicle is equipped with a manual transmission. Models R-4162A and R-4164A are used on the 225 cu. in. engine, when the vehicles are equipped with an automatic transmission.

The dash pot (used only on manual transmission equipped vehicles) is mounted on the carburetor throttle body and retards the return of the throttle to idle position. **The proper adjustment of the dash pot is very important. (See Carburetor Adjustments.)** (Fig. 2.)

Fuel from the bowl flows into the four basic fuel metering systems, which are: the idle system, the main metering system, the power enrichment system and the accelerating pump system.

The choke valve located in the bore of the carburetor is connected to a well-type automatic choke.

Additional fuel for acceleration is supplied by a diaphragm type, spring driven pump. The pump is operated by a lever connected by linkage to the throttle shaft.

A two stage power valve mounted in the metering

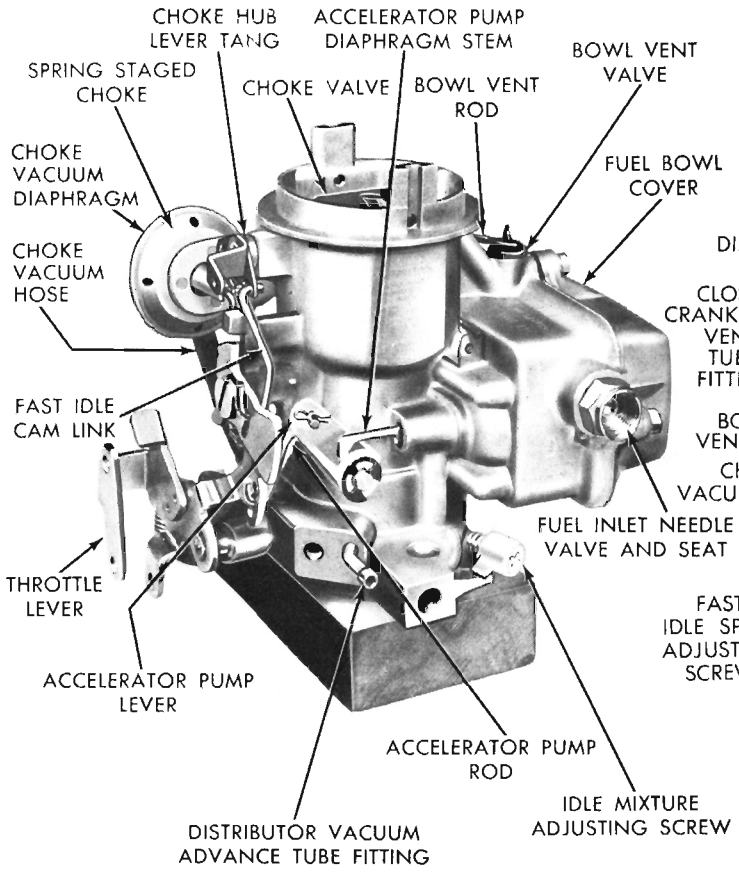

Fig. 1—Carburetor Assembly (R-4165A) Taxi Application

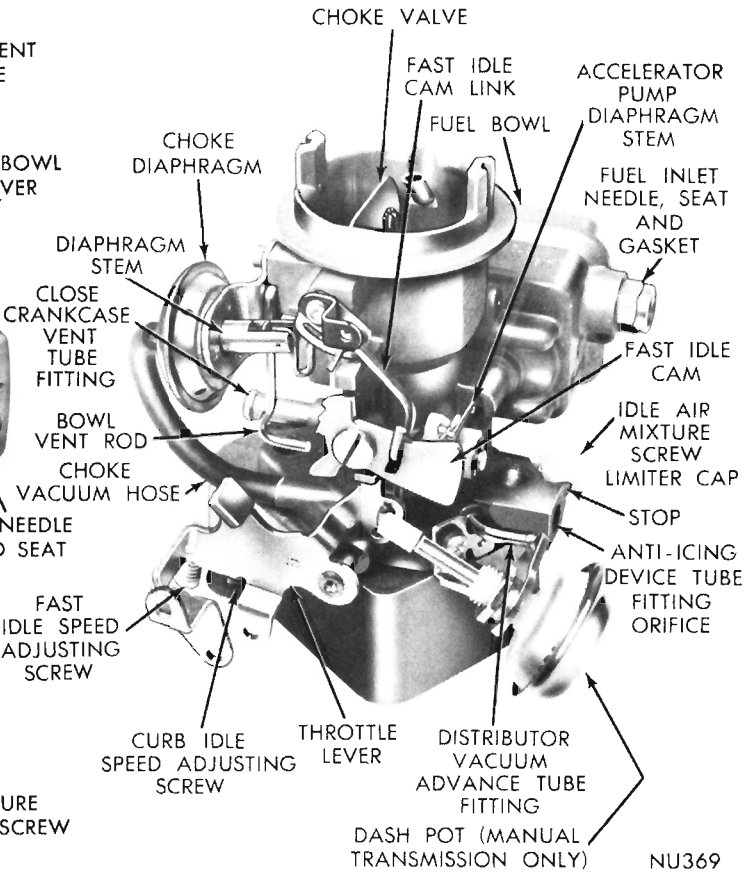

Fig. 2—Carburetor Assembly (R-4161A, R-4163A, R-4162A and R-4164A)

body, actuated by manifold vacuum, delivers the additional fuel necessary for full power and high speed operation.

Since the service procedures are identical on all Holley carburetors, the illustrations showing the various disassembly procedures will not always show any one specific carburetor.

SERVICE PROCEDURES

DISASSEMBLING CARBURETOR (Figs. 1 or 2)

(1) Place carburetor assembly on repair stand, Tool C-3866, and remove dashpot (if so equipped).

(2) Remove vacuum hose between carburetor throttle body fitting and vacuum diaphragm.

(3) Remove choke vacuum diaphragm link and bracket assembly. Disengage link from slot in choke lever; place to one side to be cleaned as a special item (Figs. 1 or 2).

(4) **As the vacuum diaphragm bracket is being removed, the bowl vent valve rod and spring will fall out. (Fig. 3).**

(5) Using a 5/8″ wrench, remove fuel inlet needle valve and seat.

(6) Remove economizer retaining screws, then lift economizer cover, diaphragm and stem out of carburetor, (Fig. 4).

(7) Remove fuel bowl attaching screws, then remove fuel bowl, baffle and gasket, (Fig. 5). Slide baffle out of bowl. Discard gasket. Remove float bumper spring.

(8) Using a suitable tool, remove float retaining clip, then slide float off fulcrum pin.

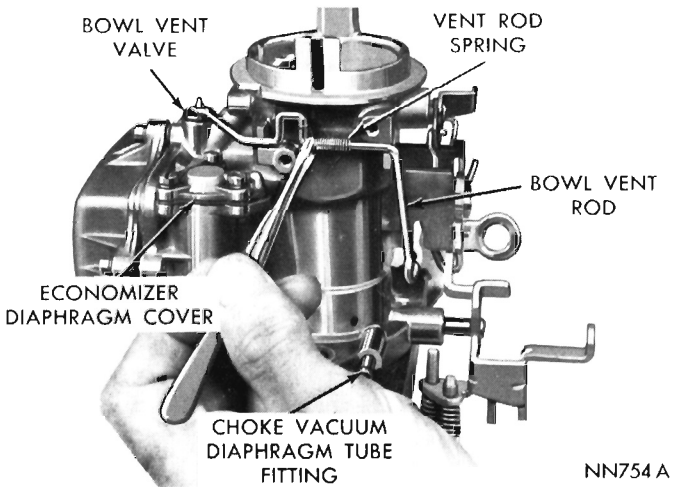

Fig. 3—Removing or Installing Bowl Vent Rod

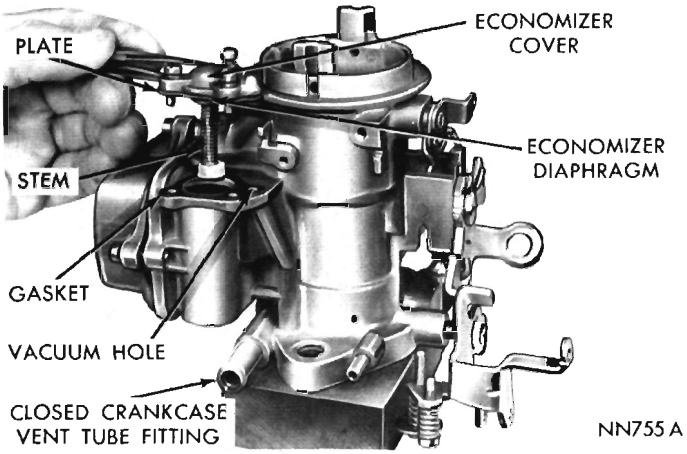

Fig. 4—Removing or Installing Economizer

(9) Remove screws that attach economizer body and plugs, then remove economizer body (Fig. 6).

(10) Tilt pump lever on its pivot until hook on pump diaphragm stem can be released. Slide pump diaphragm and spring out of fuel bowl. (Fig. 7).

(11) Using Tool C-3748, remove main jet from economizer body. (Fig. 8).

(12) Using a suitable tool, remove pump lever retaining clip. Slide lever off pivot and disengage link from throttle lever.

(13) Remove fast idle cam retaining screw, then remove cam, and at same time, disengage fast idle cam rod.

(14) Remove white plastic limiter cap from idle air mixture screw. (Be sure and count number of turns to seat the screw, as the same number of turns (from the seat) must be maintained at installation.) Remove screw and spring from throttle body. Discard plastic cap.

(15) Remove fast idle and curb idle speed screws and spring from throttle lever.

The carburetor assembly now has been disassembled as far as necessary for cleaning and inspection. It

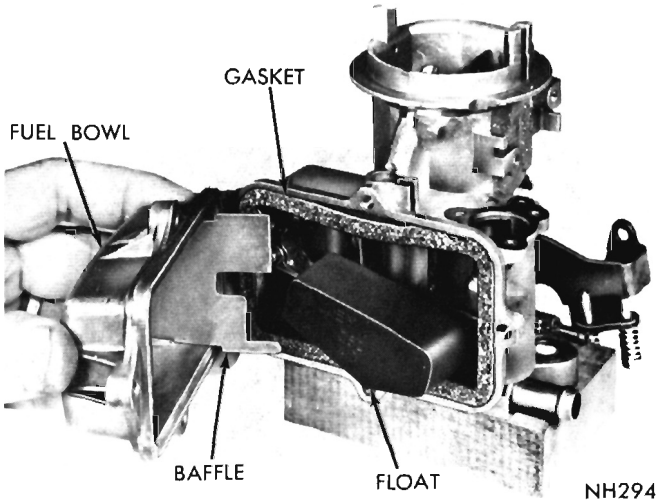

Fig. 5—Removing or Installing Fuel Bowl

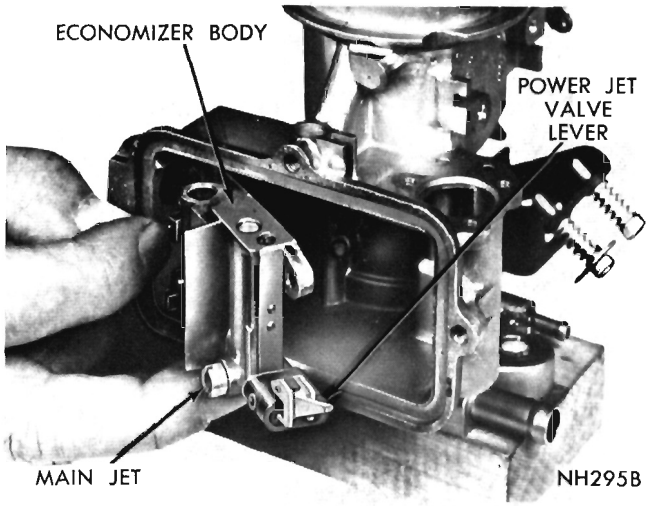

Fig. 6—Removing or Installing Economizer Body

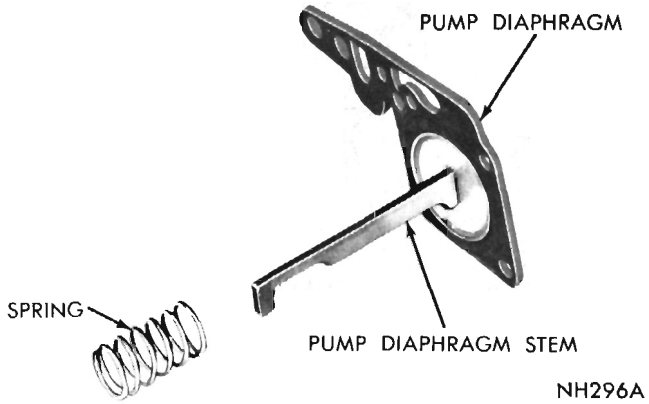

Fig. 7—Pump Diaphragm and Spring

is usually not advisable to remove the throttle shaft and valve from the throttle flange, unless wear or damage necessitates the installation of new parts.

INSPECTION AND REASSEMBLY

Throttle Shaft and Valve

(1) Check throttle shaft for excessive wear in body. If wear is extreme, it is recommended that carburetor assembly be replaced rather than installing a new shaft in old body.

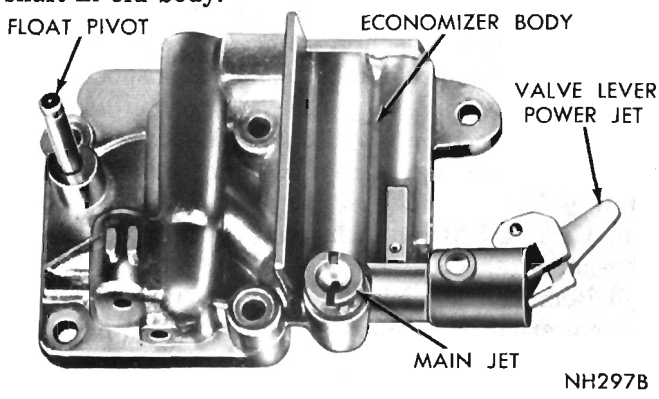

Fig. 8—Economizer Body Assembly

During manufacture, the location of the idle transfer port and the spark advance control ports to the throttle valve is carefully established for one particular assembly.

If a new shaft should be installed in an old, worn body, it would be very unlikely that the original relationship of the ports to the valve would be obtained. Changing the relationship of the valve to the ports would adversely affect normal car operation between the speeds of 15 and 30 miles per hour. However, if it has been determined that a new shaft or valve is to be installed, adhere to the following instructions:

(2) Mark position of throttle valve in bore.

(3) Remove screws that hold throttle valve to shaft, then slide valve out of bore.

CAUTION: These screws are staked on the opposite side and care should be used at removal so as not to break in the shaft.

(4) Slide throttle shaft out of body.

(5) Install new throttle shaft and lever (or new valve).

(6) Install NEW screws but do not tighten. Hold valve in place, with fingers pressing on high side of valve. Tap valve lightly with a screwdriver to seat in throttle bore. Now, tighten screws securely and stake by squeezing with pliers.

(7) Install idle mixture screw and spring in body. The tapered portion must be straight and smooth. If tapered portion is grooved or ridged, a new idle mixture screw should be installed to insure having correct idle mixture control.) **Do not use a screwdriver.** Turn screw **lightly** against its seat with fingers. Back off number of turns counted at disassembly. Install new plastic cap (blue) with tab against stop.

Assembling Carburetor

(1) Loosen choke valve attaching screws slightly.

(2) Hold valve closed, with fingers pressing on high side of valve. Tap valve lightly with a screwdriver to seat in air horn. Tighten attaching screws securely and stake by squeezing with pliers.

(3) Test choke valve for binding by rotating lever through extent of its full travel.

(4) Install fast idle and curb idle speed screws and springs in throttle lever.

(5) Engage pump link hook with throttle lever, then install in pump lever and secure with clip. When installing link, be sure link is in center hole of throttle lever.

(6) Slide pump spring (Fig. 7), over pump diaphragm stem. Install assembly in position in fuel bowl and at same time, engage hook on diaphragm stem with recess in pump lever.

(7) Install main jet in economizer body, using Tool C-3748. (Fig. 8).

(8) Turn carburetor with bowl opening up then position main well and economizer body in carburetor, (Fig. 6). Install screws and tighten securely.

(9) Engage choke link with choke lever and fast idle cam. Place cam in position, then install retaining screw. Tighten screw securely.

(10) Slide float into position over fulcrum pin and secure with retainer clip.

(11) Install fuel inlet needle, seat and new gasket. Tighten seat securely. Install float bumper spring. Check float setting as follows:

Checking Float Setting

With the carburetor inverted, slide the float gauge C-3903 into position and check the setting on the "touch" leg of the gauge, (Fig. 9). The float should just touch the gauge. Reverse the gauge and check the "No touch" leg. The float should just clear the gauge.

If an adjustment is necessary, bend the float tab (which touches the head of the fuel inlet needle) using needle nosed pliers. **Do not allow the float tab to contact the float needle head during this operation as the synthetic rubber tip of the needle can be compressed, giving a false setting. Do not touch contact area of float tab with pliers.**

Recheck float setting as described above after adjustment.

(1) Slide economizer diaphragm and stem assembly into position, making sure vacuum holes are aligned, and that stem is on power valve. (Fig. 4). Install cover and retaining screws. Tighten screws securely.

(2) Slide baffle into position in fuel bowl, place fuel bowl gasket on cover. Place fuel bowl in position, install screws and washers and tighten alternately. (Be sure gasket is sealed in recess section of main body. Tighten screws gently so as to compress only lock-washers. (Screws drawn down too tightly could distort fuel bowl and cause a leak.)

Installing Choke Vacuum Diaphragm

Inspect the diaphragm vacuum fitting to insure that the passage is not plugged with foreign material.

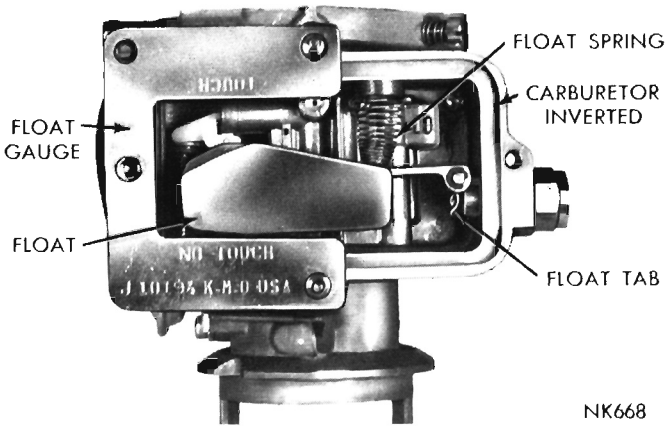

Fig. 9—Checking Float Setting

Leak check the diaphragm to determine if it has internal leaks. To do this, first depress the diaphragm stem. Then place a finger over the vacuum fitting to seal the opening. Release the diaphragm stem. If the stem moves more than 1/16 inch in 10 seconds, the leakage is excessive and the assembly must be replaced. Install the diaphragm as follows:

(1) Slide bowl vent valve rod assembly in position on air horn. Hold rod centered in its grooves, using a finger.

(2) Engage choke link in slot in choke lever.

(3) Install vacuum diaphragm assembly on air horn, being sure vent rod is in position. Install diaphragm attaching screws and tighten securely.

(4) Inspect vacuum diaphragm fitting and remove any dirt or foreign material which could plug vacuum passage. Inspect rubber hose for cracks, before placing it on correct fitting. (Fig. 1). (Install dash pot if so equipped). Do not connect vacuum hose to diaphragm fitting until after vacuum kick adjustment has been made. (See Carburetor Adjustments.)

CARBURETOR ADJUSTMENTS

It is very important that the following adjustments be made on a reconditioned carburetor.

Fast Idle Speed and Cam Position Adjustment

The fast idle engine speed adjustment should be made on the vehicle, as described in "Fast Idle Speed Adjustment." (On the Vehicle) Paragraph. However, the Fast Idle Cam Position Adjustment can be made on the bench. This adjustment is important to assure that the speeds of each cam step occur at the proper time during engine warm-up. Adjust as follows:

(1) With fast idle speed adjusting screw contacting second highest step on fast idle cam (Fig. 10), move choke valve toward closed position with light pressure on choke shaft lever.

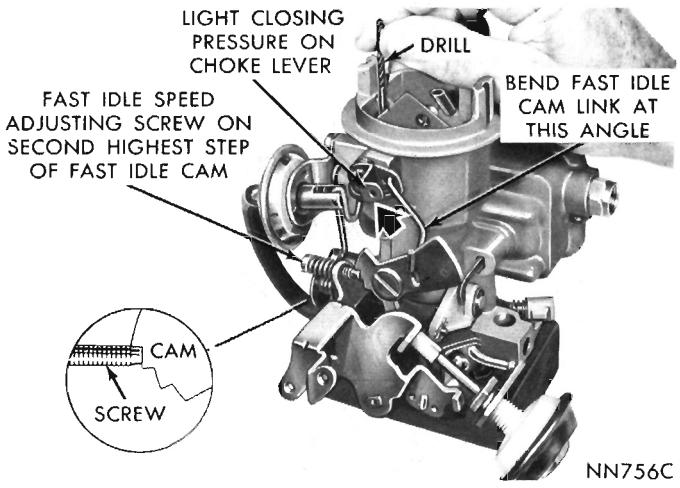

Fig. 10—Fast Idle Cam Position Adjustment

(2) Insert specified drill between choke valve and wall of air horn. (See Specifications at rear of Fuel System Group.)

(3) If an adjustment is necessary, bend fast idle link at lower angle, using Tool T-109-213, until correct valve opening has been obtained. (Fig. 10).

When the correct fast idle position cam adjustment has been made, the choke unloader (wide open kick) adjustment has also been obtained. No further adjustment is required.

Vacuum Kick Adjustment—(This test can be made ON or OFF vehicle.)

The choke diaphragm adjustment controls the fuel delivery while the engine is running. It positions the choke valve within the air horn by action of the linkage between the choke shaft and the diaphragm. The diaphragm must be energized to measure the vacuum kick adjustment. Use either a distributor test machine with a vacuum source or vacuum supplied by the vehicle. Adjust as follows:

(1) If adjustment is to be made with engine running, back off fast idle speed screw until choke can be closed to the kick position with engine at curb idle. (Note number of screw turns required so that fast idle can be returned to original adjustment). If an auxiliary vacuum source is to be used, open throttle valve (engine not running) and move choke to closed position. Release throttle first, then release choke.

(2) When using an auxiliary vacuum source, disconnect vacuum hose from carburetor and connect it to hose from vacuum supply with a small length of tube to act as a fitting. Removal of hose from diaphragm may require forces which damage the system. Apply a vacuum of 10 or more inches of mercury.

(3) Insert specified drill (refer to Specifications) between choke valve and wall of air horn (Fig. 11). Apply sufficient closing pressure on lever to which choke rod attaches to provide a minimum choke valve open-

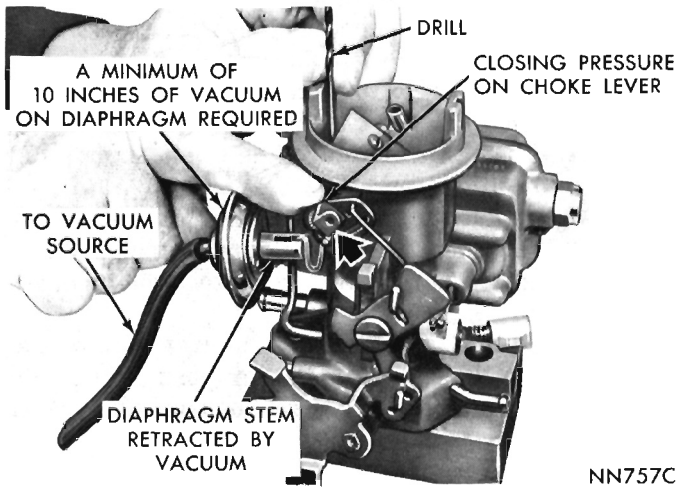

Fig. 11—Checking Choke Vacuum Kick Setting

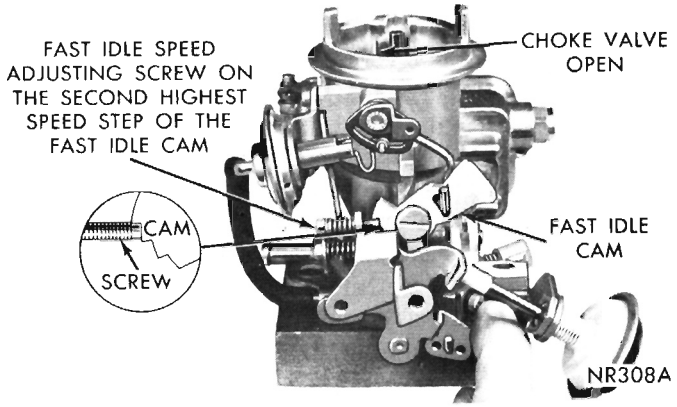

Fig. 12—Fast Idle Speed Adjustment (On Vehicle)

ing without distortion of diaphragm link. Note that the cylindrical stem of diaphragm will extend as internal spring is compressed. This spring must be fully compressed for proper measurement of vacuum kick adjustment.

(4) An adjustment will be necessary if a slight drag is not obtained as drill is being removed. Shorten or lengthen diaphragm link to obtain correct choke opening. Length changes should be made carefully by bending (open or closing) the bend provided in diaphragm link. **CAUTION: DO NOT APPLY TWISTING OR BENDING FORCE TO DIAPHRAGM.**

(5) Reinstall vacuum hose on correct carburetor fitting. Return fast idle screw to its original location if disturbed as suggested in Step No. 1.

(6) Make following check. With no vacuum applied to diaphragm, the **CHOKE VALVE SHOULD MOVE FREELY** between open and closed positions. If movement is not free, examine linkage for misalignment or interferences caused by bending operation. Repeat adjustment if necessary to provide proper link operation.

Idle Speed Adjustment (Curb Idle)

(Refer to General Information at Front of Section).

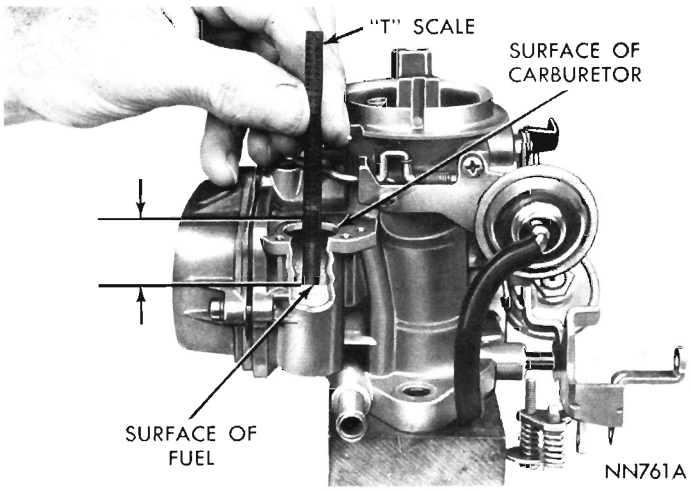

Fig. 13—Measuring Wet Fuel Level

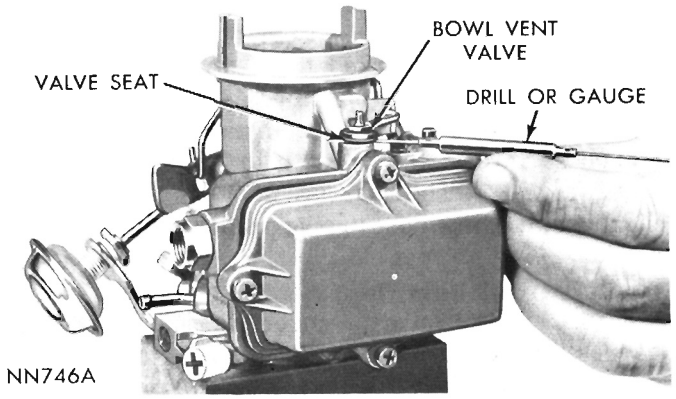

Fig. 14—Checking Bowl Vent Opening

Fast Idle Speed Adjustment (On Vehicle)

Fast idle engine speed is used to overcome cold engine friction, stalls after cold starts and stalls because of carburetor icing. Set this adjustment after the vehicle odometer indicates over 500 miles to insure a normal engine friction level. Prepare engine by driving at least 5 miles. Connect a tachometer and set the curb idle speed and mixture, then proceed as follows:

(1) With engine off and transmission in PARK or NEUTRAL position, open throttle slightly.

(2) Close choke valve until fast idle screw can be positioned on second highest-speed step of fast idle cam (Fig. 12).

(3) Start engine and determine stabilized speed. Turn fast idle speed screw in or out to secure specified speed. (See Specifications.)

(4) Stopping engine between adjustments is not necessary. However, reposition fast idle speed screw on cam after each speed adjustment to provide correct throttle closing torque.

Before adjusting idle and/or fast idle speeds and mixtures, make sure that basic timing and distributor control valve are correctly adjusted as outlined under Idle Speed Adjustment (Curb Idle).

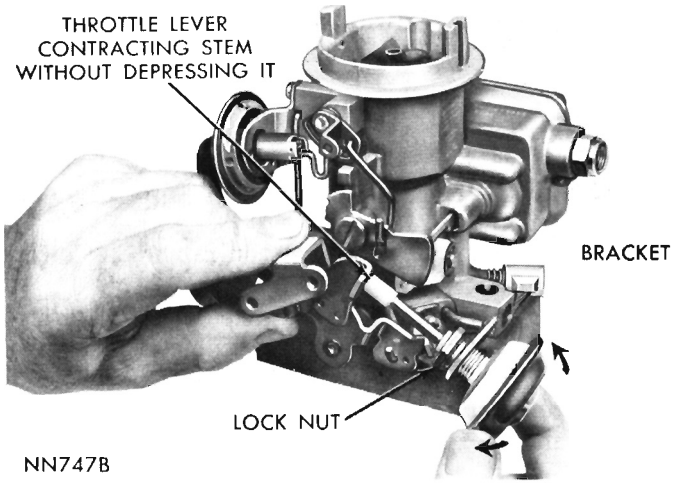

Fig. 15—Adjusting Dash Pot

Checking Wet Fuel Level

With engine running and car on a level floor, the fuel level can be checked or measured through the economizer diaphragm opening. Using a 6″ scale with a depth gauge, measure the distance from the machined surface of the opening to the exact fuel surface, (Fig. 13). The measurement should be 27/32 inch. If not, adjust float to give proper level.

Bowl Vent Adjustment

With throttle valve at curb idle speed, it should be possible to insert a 3/32″ (.0937″) drill between bowl vent and the seat, (Fig. 14). This measurement should never exceed .125 inch (1/8″ drill).

If an adjustment is necessary, bend vent rod at horizontal portion until correct clearance has been obtained. Be sure vent rod does not bind in guide after adjusting.

Dashpot Setting and Adjustment

With the curb idle speed and mixture properly set and a tachometer installed, position the throttle lever so that the actuating tab on the lever is contacting the stem of the dashpot but not depressing it. The tachrometer should read 2500 rpm if the setting is correct. To adjust the setting if necessary, screw the dashpot in or out as required. When the desired setting is obtained, tighten the lock nut on the dashpot against the bracket. (Fig. 15.)

To set the idle speed, refer to the Fuel System General Information Paragraph.

BBD SERIES CARBURETORS (1-¼″)

INDEX

	Page
Automatic Choke (well type)	2
Carburetor Adjustments	25
Accelerator Pump and Bowl Vent	25
Choke Vacuum Kick	26
Fast Idle Cam Position	25
Fast Idle Speed (On Vehicle)	27
Choke Unloader (Wide Open Kick)	26
Idle Speed Adjustment	26
Dashpot Adjustment	28
Cleaning Carburetor Parts	1
Closed Crankcase Vent System	2
Disassembling Carburetor	20
Inspection and Reassembly	23
Specifications	84

GENERAL INFORMATION

The Ball and Ball Canadian Carburetor models BBD-4609S and BBD-4610S are used on the 318 cu. in. engine when the vehicle is equipped with a manual or automatic transmission respectively, and an Anti-Icing Device.

The U.S. Ball and Ball Carburetor models BBD-4605S (with Dash pot) and BBD-4606S are used on the 273 cu. in. engine when the vehicle is equipped with a manual or automatic transmission respectively. Carburetors BBD-4607S (with dash pot) and BBD-4608S are used on the 318 cu. in. engine when the vehicle is equipped with a manual or automatic transmission respectively. The dash pot (used on manual transmission equipped vehicles) is mounted on the carburetor and retards the return of the throttle to idle position. **The proper adjustment of the dash pot is very important.** (See Carburetor Adjustments.)

Since the service procedures are identical on all BBD carburetors, the illustrations showing the various disassembly procedures will not always show any one specific carburetor.

SERVICE PROCEDURES

DISASSEMBLING CARBURETOR (Figs. 1 or 2)

(1) Place carburetor assembly on repair block Tool C-3225.

(2) Remove hairpin clips and disengage accelerator pump operating rod. (On the 273 cubic inch engine, accelerator pump rod is located in the outer hole of accelerator pump rocker arm, with manual transmission and in inner hole with automatic transmission.)

(3) Remove clips and disengage fast idle connector rod from fast idle cam and choke lever.

(4) Remove vacuum hose between carburetor main body and choke vacuum diaphragm.

(5) Remove clip from choke operating link and disengage link from diaphragm plunger (stem) and choke lever. (Fig. 1).

(6) Remove choke vacuum diaphragm and bracket assembly and place to one side to be cleaned as a special item. **A liquid cleaner may damage diaphragm material.**

(7) Remove air horn retaining screws and lift air

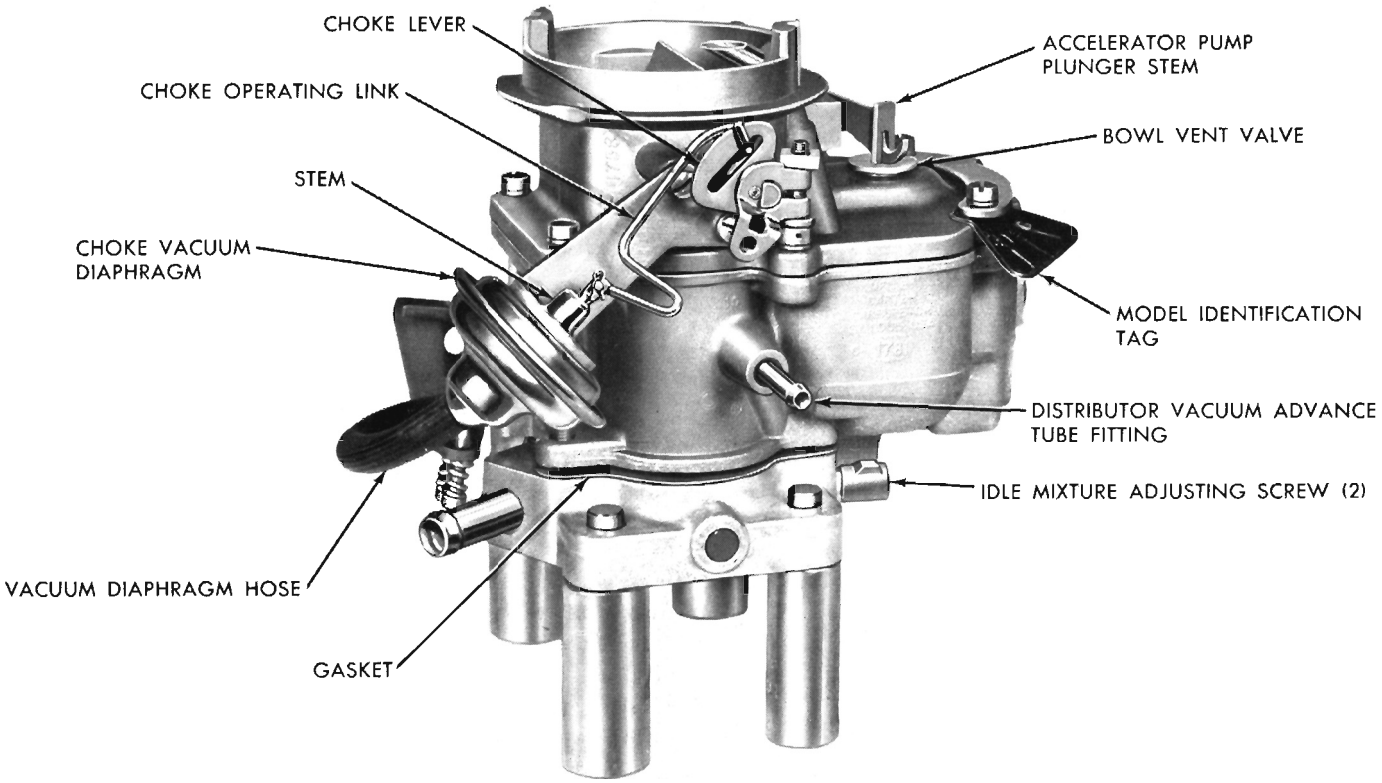

Fig. 1—Carburetor Assembly (BBD-4605S, BBD-4608S) and BBD-4610S Canadian

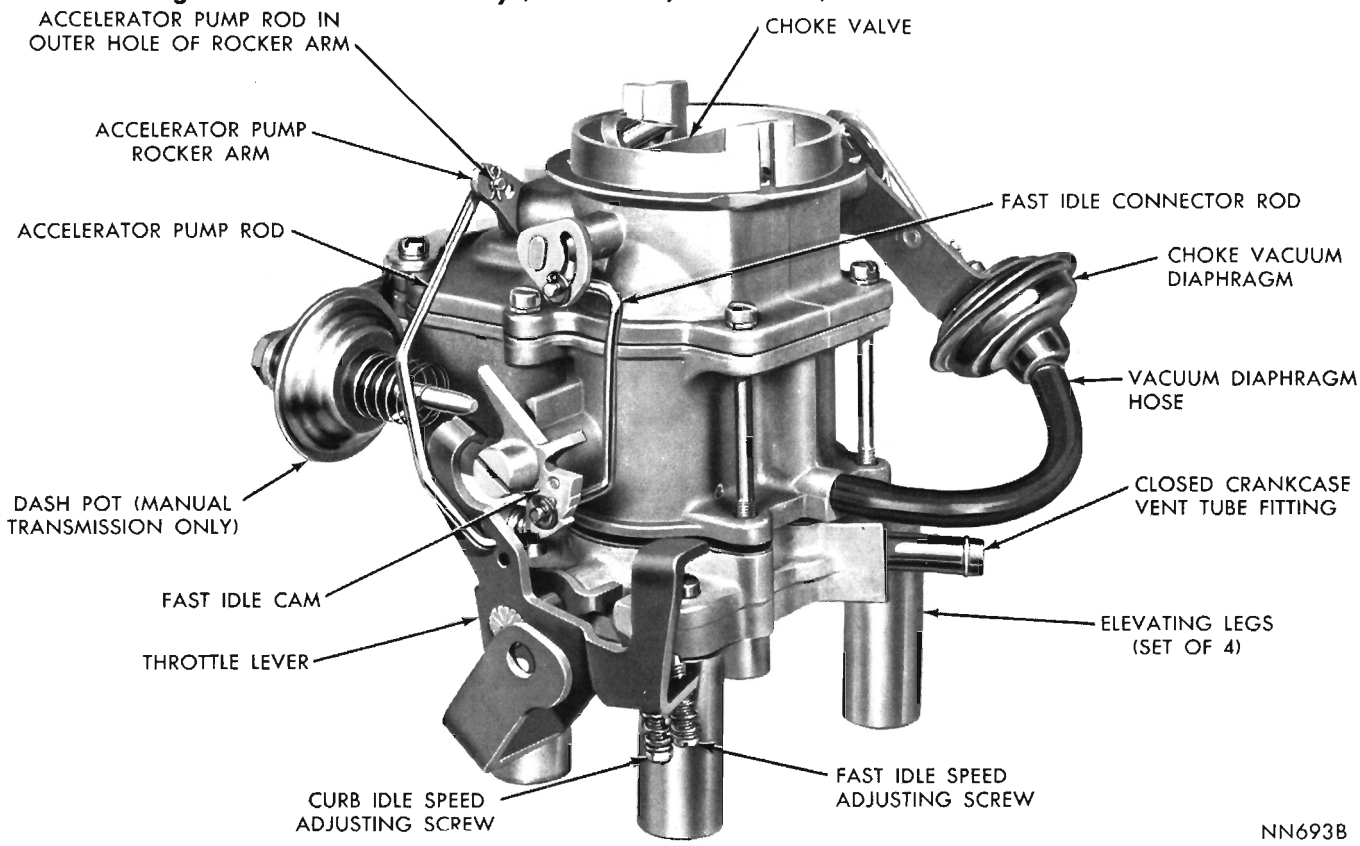

Fig. 2—Carburetor Assembly (BBD-4606S, BBD-4607S) and BBD-4609S Canadian

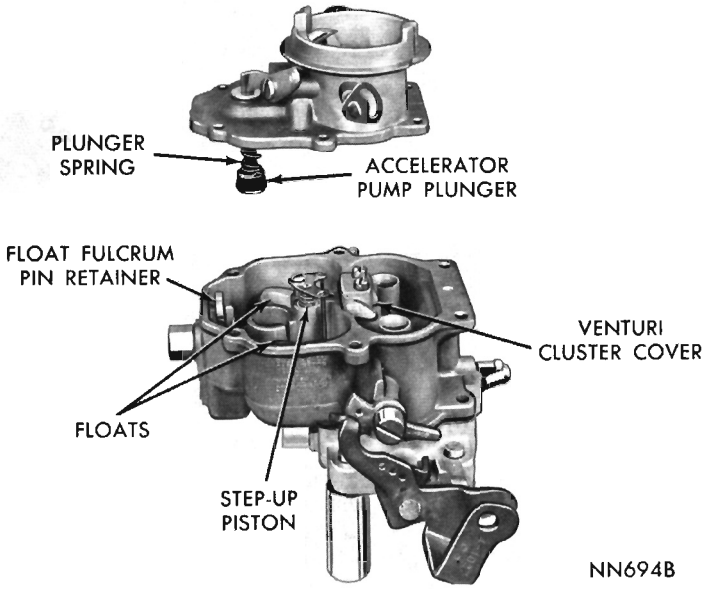

Fig. 3—Removing or Installing Air Horn

horn straight up and away from main body, (Fig. 3). Discard gasket. Remove dash pot and bracket (if so equipped).

(8) Disengage accelerator pump plunger from rocker arm by pushing up bottom of plunger and sliding plunger shaft off hook. Slide plunger out of air horn and remove bowl vent valve, spring seat and spring.

If the old plunger can be used again, or if a new plunger is to be installed, place plunger in a jar of clean gasoline or kerosene to prevent leather from drying out.

(9) Remove fuel inlet needle valve, seat and gasket from main body.

(10) Lift out float fulcrum pin retainer, then lift out floats and fulcrum pin.

(11) Remove step-up piston retaining screw, and slide step-up piston and rods out of well, (Fig. 4). Now, lift out step-up piston spring. Remove step-up piston gasket from the bottom of well.

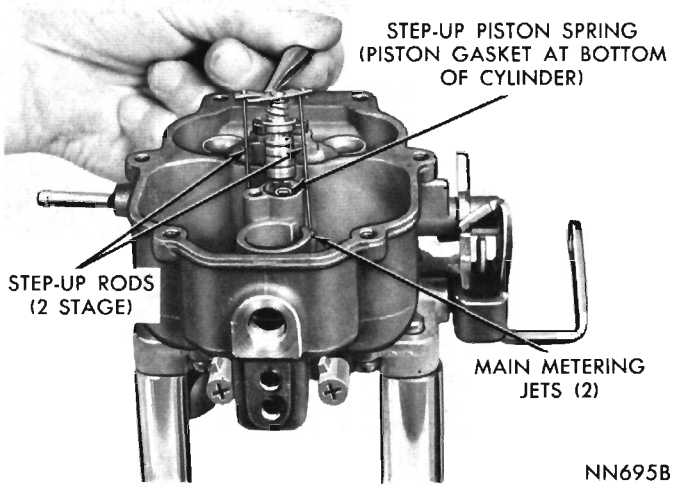

Fig. 4—Removing or Installing Step-Up Piston

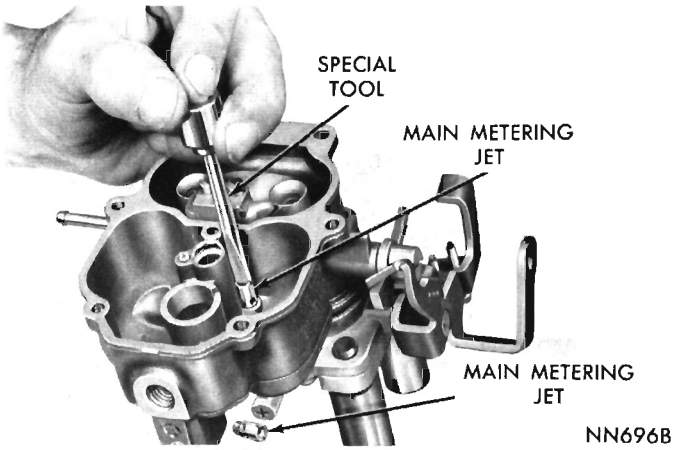

Fig. 5—Removing or Installing Main Metering Jets

(12) Remove main metering jets, (Fig. 5).

(13) Remove venturi cluster screws, then lift venturi cluster and gaskets up and away from main body, (Fig. 6). Discard gaskets. **Do not remove the idle orifice tubes or main vent tubes from the cluster.** They can be cleaned in a solvent and dried with compressed air.

(14) Invert carburetor and drop out accelerator pump discharge and intake check balls.

(15) Remove white plastic limiter cap from idle air mixture screws. (Be sure and count number of turns to seat the screw, as the same number of turns (from the seat) must be maintained at installation.) Remove screws and springs from throttle body.

(16) Remove screws that attach throttle body to main body. Separate bodies.

(17) Test freeness of choke mechanism in air horn. The choke shaft must float free to operate correctly. If choke shaft sticks in bearing, or appears to be gummed from deposits in air horn, a thorough cleaning will be required.

The carburetor now has been disassembled into

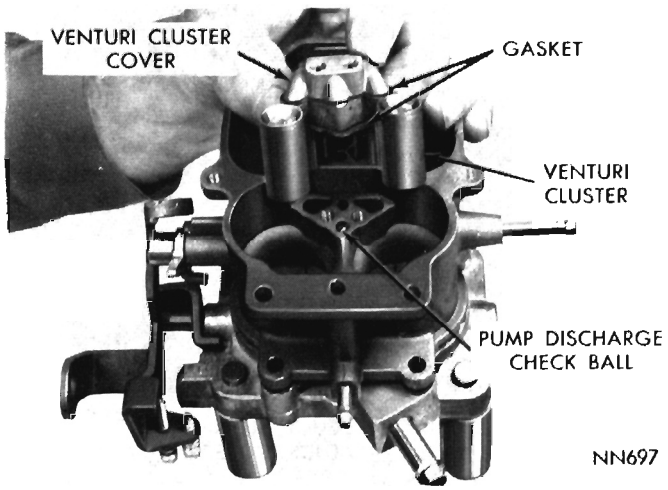

Fig. 6—Removing or Installing Venturi Cluster

three main units, namely, the air horn, main body and throttle body and the component parts of each disassembled as far as necessary for cleaning and inspection.

It is usually not advisable to remove the throttle shaft or valves from the throttle body, unless wear or damage necessitates the installation of new parts.

INSPECTION AND REASSEMBLY

Throttle Body

(1) Check throttle shaft for excessive wear in throttle body. (If wear is extreme, it is recommended that throttle body assembly be replaced rather than installing a new shaft in old body.)

During manufacture, the location of the idle transfer port and the spark advance control ports to the throttle valve, is carefully established for one particular assembly. (Fig. 7).

If a new shaft should be installed in an old, worn throttle body, it would be very unlikely that the original relationship of the ports to the valves would be obtained. Changing the relationship of the valves to the ports would adversely affect normal vehicle operation between the speeds of 15 and 30 miles per hour. However, if it has been determined that a new shaft or valves is to be installed, adhere to the following instruction:

(2) Mark position of throttle valves to shaft, then slide valves out of bores. **CAUTION: These screws are staked on the opposite side and care should be used at removal so as not to break off in the shaft.**

(3) Slide throttle shaft out of throttle body.

(4) Slide new throttle shaft into throttle body.

(5) Install throttle valves in their respective bores (with valve numbers toward manifold). Install new screws but do not tighten. Hold valves in place (idle position) with fingers pressing on high sides of valves. Tap valves with a screwdriver to seat in throttle bores. Tighten screws lightly. Hold up to a strong light to check for a proper position in bore. (They may have to be rotated slightly as the valves are elliptical.) When properly positioned, tighten screws securely and stake, using pliers.

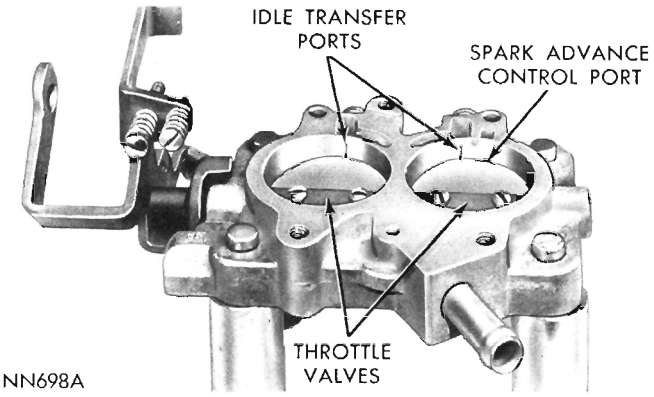

Fig. 7—Ports in Relation to Throttle Valves

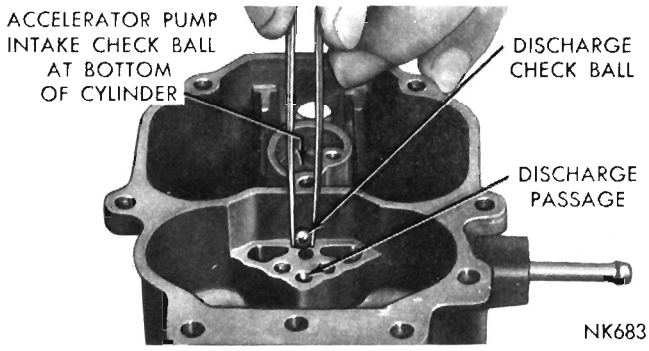

Fig. 8—Installing Accelerator Pump Discharge Check Ball

(6) Install idle mixture screws and springs in body. (The tapered portion must be straight and smooth. If tapered portion is grooved or ridged, a new idle mixture screw should be installed to insure having correct idle mixture control.) DO NOT USE A SCREW DRIVER. Turn screws lightly against their seats with fingers. Back off number of turns counted at disassembly. Install new plastic caps (blue) with tab against stop.

Main Body

(1) Invert main body and place insulator in position, then place throttle body on main body and align. Install screws and tighten securely.

(2) Install accelerator pump discharge check ball (5/32 inch diameter) in discharge passage, (Fig. 8). Drop accelerator pump intake check ball (3/16 inch diameter) into bottom of the pump cylinder.

To check the accelerator pump system; fuel inlet and discharge check balls, proceed as follows:

(3) Pour clean gasoline into carburetor bowl, approximately 1/2 inch deep. Remove pump plunger from jar of gasoline and slide down into pump cylinder. Raise plunger and press lightly on plunger shaft to expel air from pump passage.

(4) Using a small clean brass rod, hold discharge check ball down firmly on its seat. Again raise plunger and press downward. No fuel should be emitted from either intake or discharge passage, (Fig. 9).

If any fuel does emit from either passage, it indicates the presence of dirt or a damaged check ball or seat. Clean passage again and repeat test. If leakage is still evident, install new check balls. The fuel inlet check ball is located at bottom of the plunger well. Remove fuel from bowl.

(5) Install new gaskets on venturi cluster, then install in position in main body. (Fig. 6). Install cluster screws and tighten securely.

(6) Before installing step-up piston, be sure step-up rods are able to move freely each side of vertical

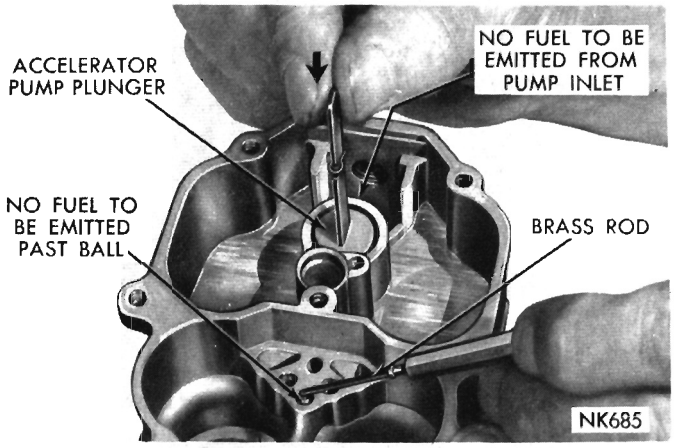

Fig. 9—Testing Accelerator Pump Intake and Discharge Check Balls

position, (Fig. 10). The step-up rods must be straight and smooth.

(7) Slide step-up piston gasket down into position in piston well, then install step-up piston spring and step-up piston and rods. Carefully guide step-up rods into main metering jets. (Fig. 4). Install retaining screw and tighten securely.

A step-up piston stuck in the **UP** position will cause a rich mixture at part throttle, whereas a piston stuck in the **DOWN** position will cause a lean mixture at wide open throttle and poor acceleration.

Checking Float Setting

The carburetors are equipped with a synthetic rubber tipped fuel inlet needle. The needle tip is a rubber material which is not affected by gasoline and is stable over a wide range of temperatures. The tip is flexible enough to make a good seal on the needle seat, and to give increased resistance to flooding.

The use of the inlet needle requires that care be used in adjusting the float setting. Care should be taken to perform this accurately in order to secure the best performance and fuel economy.

To correctly set the float height, when the carburetor is being overhauled, proceed as follows:

(1) Install floats with fulcrum pin and pin retainer in main body.

(2) Install needle, seat and gasket in body and tighten securely.

(3) Invert main body (catch pump intake check ball) so that weight of floats **only,** is forcing needle against seat. Hold finger against retainer to fully seat fulcrum pin.

(4) Using Tool T-109-282 or a "T" scale, check the float, (Fig. 11). There should be 1/4 inch from surface of fuel bowl to crown of each float at center.

If an adjustment is necessary, hold the floats on the bottom of the bowl and bend the float lip toward or away from the needle. Recheck the 1/4 inch setting again then repeat the lip bending operation as required. **CAUTION: When bending the float lip, do not allow the lip to push against the needle as the synthetic rubber tip can be compressed sufficiently to cause a false setting which will affect correct level of fuel in the bowl.** After being compressed, the tip is very slow to recover its original shape.

It is very important that the float lip be perpendicular to the needle or slanted not more than ten degrees away from the needle when the float is set correctly.

Air Horn

(1) Assemble pump plunger, spring and spring seat, (Fig. 12). Slide plunger shaft through opening in air horn. Install bowl vent valve over plunger shaft, then engage with pump rocker arm.

(2) Place a new gasket on main body, then install air horn. (Fig. 3). Install attaching screws and tighten securely. (When installing air horn be sure leather on plunger does not fold back.) Install dash pot (if so equipped).

(3) Engage fast idle connector rod in choke lever and fast idle cam. Secure with clips.

(4) Engage accelerator pump operating rod in proper hole in rocker arm (depending on carburetor) and in center hole in throttle lever. (Fig. 1). Install clips to secure.

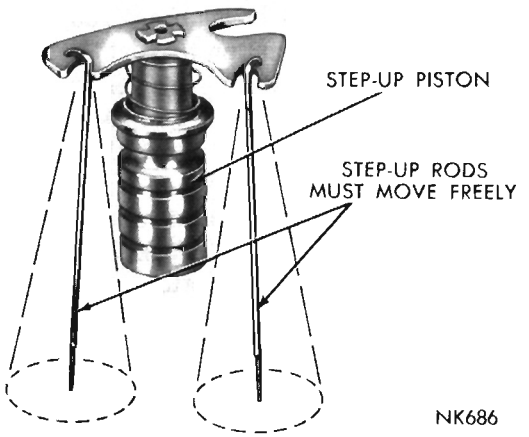

Fig. 10—Step-Up Piston and 2 Stage Rods

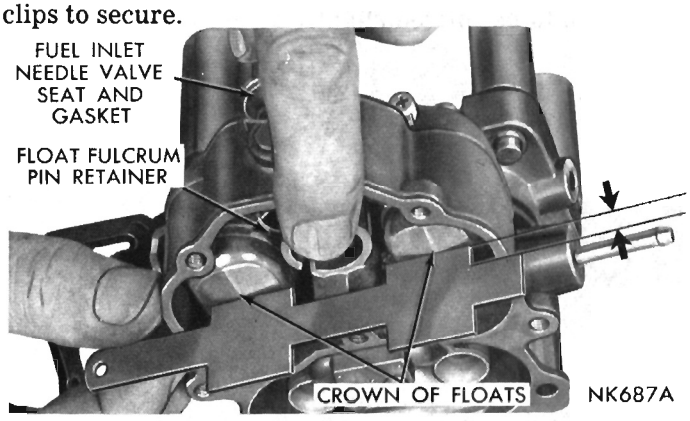

Fig. 11—Checking Float Setting

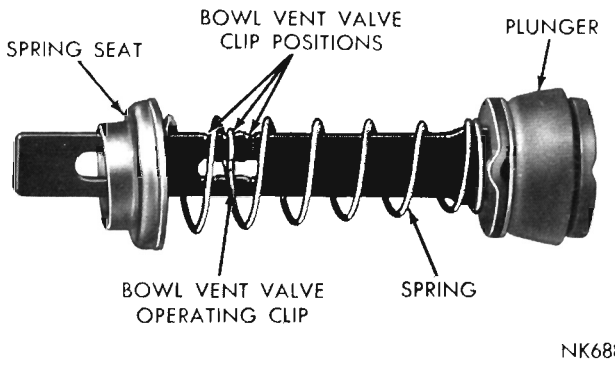

Fig. 12—Accelerator Pump Assembly

Choke Vacuum Diaphragm

Inspect the diaphragm vacuum fitting to insure that the passage is not plugged with foreign material. Leak check the diaphragm to determine if it has internal leaks. To do this, first depress the diaphragm stem, then place a finger over the vacuum fitting to seal the opening. Release the diaphragm stem. If the stem moves more than 1/16 inch in 10 seconds, the leakage is excessive and the assembly must be replaced.

Install the diaphragm assembly on the air horn as follows:

(1) Assemble to air horn and tighten the attaching screws securely.

(2) Install choke operating link in position between diaphragm plunger (stem) and choke lever. Install clip to secure.

(3) Inspect rubber hose for cracks before placing it on correct carburetor fitting. (Fig. 1). Do not connect vacuum hose to diaphragm fitting until after vacuum kick adjustment has been made. (See Carburetor Adjustments.)

(4) Loosen choke valve attaching screws slightly. Hold valve closed, with fingers pressing on high side of valve. Tap valve lightly with a screw driver to seat in air horn. Tighten attaching screws securely and take by squeezing with pliers.

CARBURETOR ADJUSTMENTS

It is very important that the following adjustments be made on a reconditioned carburetor, and in the sequence listed:

Accelerator Pump and Bowl Vent

When assembling the accelerator pump to the air horn, note that the hair pin clip (which opens the bowl vent) can be placed in any one of the three positioning notches. These notches correspond to the long, medium and short pump stroke holes in the throttle lever. Normally, the bowl vent clip on the pump stem will be at the middle notch and the pump operating rod in the medium stroke hole.

The proper procedure is to adjust the amount of bowl vent opening instead of measuring and setting the height of the pump plunger.

To check or set the adjustment, proceed as follows:

(1) Back off idle speed adjusting screw. Open choke valve so that fast idle cam allows throttle valves to be completely seated in bores.

(2) Be sure pump operating rod is in medium stroke hole in throttle lever, and that bowl vent clip on pump stem is in center notch.

(3) Close throttle valves tightly. It should be just possible to insert a 1/16 inch drill between bowl vent and its seat, (Fig. 13).

If an adjustment is necessary, bend the pump operating rod, using Tool T-109-213, at lower angle, until the correct bowl vent opening has been obtained.

This is an important adjustment, since too much lift at the bowl vent will result in considerable loss in low speed fuel economy.

Remember that if the pump operating rod is moved to either the short or long stroke position, a corresponding change must be made in the location of the bowl vent clip, and the amount of lift of the bowl vent rechecked and adjusted.

Fast Idle Speed and Cam Position Adjustment

The fast idle engine speed adjustment should be made on the vehicle, as described in the Fast Idle Speed Adjustment (On the Vehicle) Paragraph. However, the Fast Idle Cam Position Adjustment can be made on the bench. This adjustment is important to assure that the speeds of each cam step occur at the proper time during engine warm-up. Adjust as follows:

(1) With fast idle speed adjusting screw contacting second highest speed step on fast idle cam, move choke valve toward closed position with light pressure on choke shaft lever.

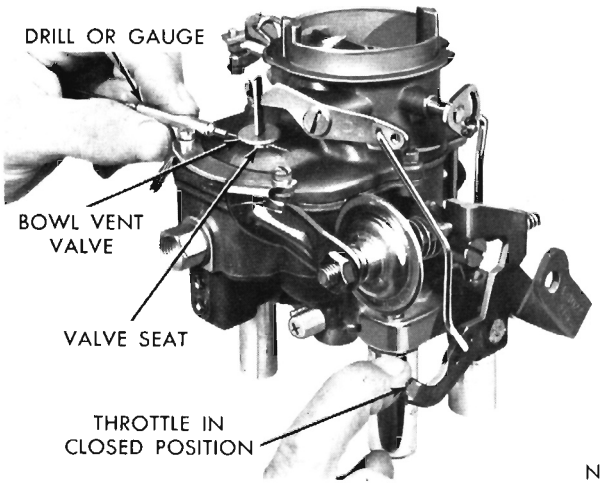

Fig. 13—Checking Bowl Vent Opening

(2) Insert specified drill (see specifications) between choke valve and wall of air horn. An adjustment will be necessary if a slight drag is not obtained as drill or gauge is being removed.

(3) If an adjustment is necessary, bend fast idle connector rod at angle, using Tool T-109-213, until correct valve opening has been obtained (Fig. 14).

Vacuum Kick Adjustment—(This test can be made On or Off Vehicle.)

The choke diaphragm adjustment controls the fuel delivery while the engine is running. It positions the choke valve within the air horn by action of the linkage between the choke shaft and the diaphragm. The diaphragm must be energized to measure the vacuum kick adjustment. Use either a distributor test machine with a vacuum source or vacuum supplied by the vehicle. Adjust as follows:

(1) If adjustment is to be made with engine running, disconnect fast idle linkage to allow choke to close to the kick position with engine at curb idle. If an auxiliary vacuum source is to be used, open throttle valves (engine not running) and move choke to closed position. Release throttle first, then release choke.

(2) When using an auxiliary vacuum source, disconnect vacuum hose from carburetor and connect it to hose from vacuum supply with a small length of tube to act as a fitting. Removal of hose from diaphragm may require forces which damage the system. Apply a vacuum of 10 or more inches of mercury.

(3) Insert specified drill (refer to Specifications) between choke valve and wall of air horn (Fig. 15). Apply sufficient closing pressure on lever to which choke rod attaches to provide a minimum choke valve opening without distortion of diaphragm link. Note that the cylindrical stem of diaphragm will extend as internal spring is compressed. This spring must be fully compressed for proper measurement of vacuum kick adjustment.

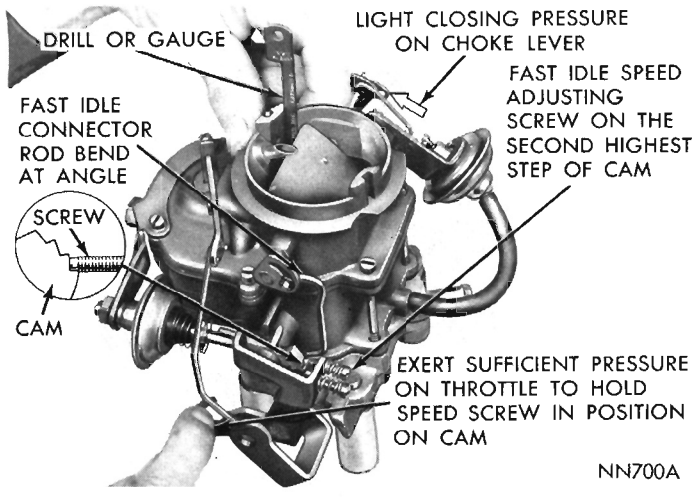

Fig. 14—Fast Idle Cam Position Adjustment

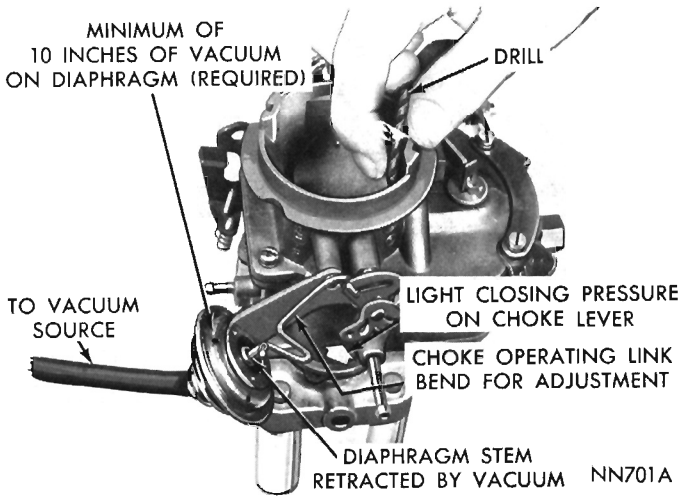

Fig. 15—Checking Choke Vacuum Kick Setting

(4) An adjustment will be necessary if a slight drag is not obtained as drill is being removed. Shorten or lengthen diaphragm link to obtain correct choke opening. Length changes should be made carefully by bending (open or closing) the bend provided in diaphragm link. **CAUTION: DO NOT APPLY TWISTING OR BENDING FORCE TO DIAPHRAGM.**

(5) Reinstall vacuum hose on correct carburetor fitting. Return fast idle linkage to its original condition if disturbed as suggested in Step No. 1.

(6) Make following check. With no vacuum applied to diaphragm, the **CHOKE VALVE SHOULD MOVE FREELY** between open and closed positions. If movement is not free, examine linkage for misalignment or interferences caused by bending operation. Repeat adjustment if necessary to provide proper link operation.

Choke Unloader (Wide Open Kick)

The choke unloader is a mechanical device to partially open the choke valve at wide open throttle. It is used to eliminate choke enrichment during cranking of an engine. Engines which have been flooded or stalled by excessive choke enrichment can be cleared by use of the unloader. Adjust the choke unloader as follows:

(1) Hold throttle valves in wide open position. Insert specified drill (see Specifications) between upper edge of choke valve and inner wall of air horn.

(2) With a finger lightly pressing against shaft lever, a slight drag should be felt as drill is being withdrawn. If an adjustment is necessary, bend unloader tang on throttle lever until correct opening has been obtained. (Fig. 16.)

Idle Speed Adjustment (Curb Idle) (Canadian Carburetors)

U.S. Carburetors, (Refer to General Information at Front of Section).

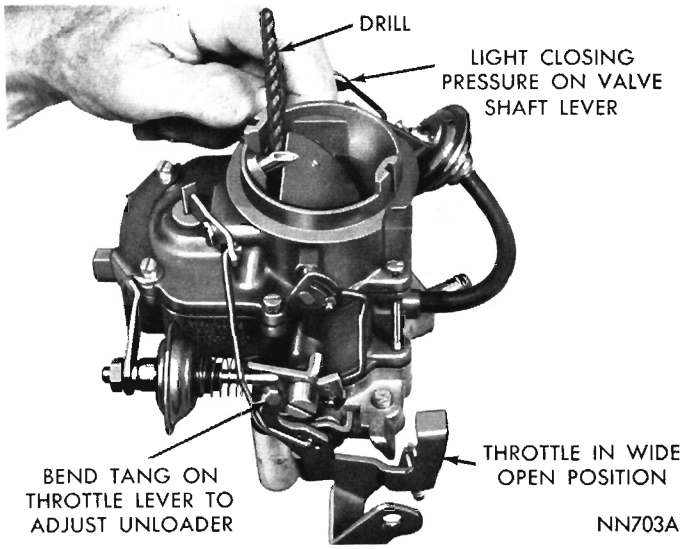

Fig. 16—Measuring Choke Unloader Setting

To make the idle speed adjustment, the engine must be thoroughly warmed up. A much more reliable idle adjustment can usually be obtained if the car has been driven a minimum of five miles. For the best results, it is recommended that a tachometer be used in this adjustment. (Before making the idle speed adjustment, observe the following precautions:)

Because the alternator can charge at idle speeds and impose a load on the engine, the headlights should be turned on (high beam). This will assure setting the idle to compensate for the alternator load. On vehicles equipped with the automatic transmission, disconnect the transmission control rod from the carburetor lever so that the stop in the transmission will not interfere with the free movement of the carburetor throttle lever.

To make the idle speed adjustment, proceed as follows:

(1) Turn idle speed screw **in** or **out** to obtain the recommended curb idle r.p.m. Be sure that choke valve is fully open and that fast idle adjusting screw is not contacting fast idle cam.

(2) Turn each idle mixture screw to obtain highest r.p.m. While making adjustment, carefully watch tachometer and notice that speed can be decreased by turning screws in either direction from setting that gave highest r.p.m. reading.

(3) Readjust to specified r.p.m. with idle speed screw.

(4) Turn each idle mixture adjusting screw in clockwise direction (leaner) until there is a slight drop in r.p.m. Now, turn each screw out counterclockwise (richer) just enough to regain lost r.p.m.

This procedure will assure that idle has been set to leanest mixture possible for smooth idle. **This setting is very important.**

Since correct speed was originally set using the speed screw, speed obtained after finding the leanest smooth idle setting will probably be too fast.

(5) Readjust speed screw to obtain correct idle speed. Repeat steps 2 and 4 above if necessary. After proper idle speed has been obtained, refer to Throttle Linkage Group in this Section, for procedure on adjusting transmission control rod.

Fast Idle Speed Adjustment (On Vehicle)

Fast idle engine speed is used to overcome cold engine friction, stalls after cold starts and stalls because of carburetor icing. Set this adjustment after the vehicle odometer indicates over 500 miles to insure a normal engine friction level. Prepare engine by driving at least 5 miles. Connect a tachometer and set the curb idle speed and mixture, then proceed as follows:

(1) With engine off and transmission in PARK or NEUTRAL position, open throttle slightly.

(2) Close choke valve until fast idle screw can be positioned on second highest-speed step of fast idle cam (Fig. 17).

(3) Start engine and determine stabilized speed. Turn fast idle speed screw in or out to secure specified speed. (See Specifications.)

(4) Stopping engine between adjustments is not necessary. However, reposition fast idle speed screw on

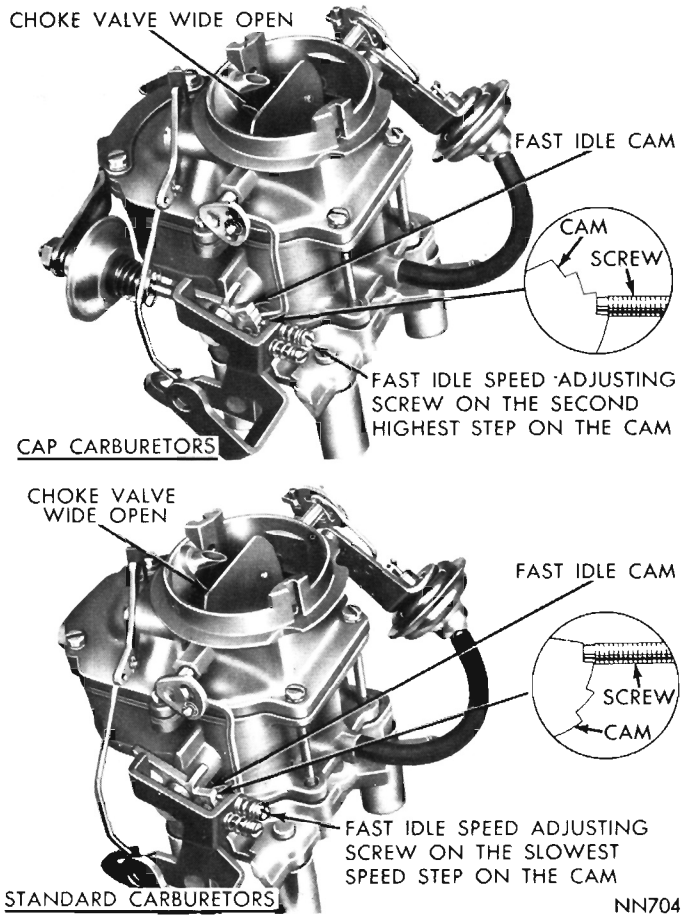

Fig. 17—Fast Idle Speed Adjustment (On Vehicle)

cam after each speed adjustment to provide correct throttle closing torque.

Before adjusting idle and/or fast idle speeds and mixtures, make sure that the basic timing and the distributor control valve are correctly adjusted as outlined under Idle Speed Adjustment (Curb Idle).

Dashpot Setting and Adjustment Manual Transmission Only

With the curb idle speed and mixture properly set and a tachometer installed, position the throttle lever so that the actuating tab on the lever is contacting the stem of the dashpot but not depressing it. The tachometer should read 2000 rpm if the setting is correct. To adjust the setting if necessary, screw the dashpot in or out as required. When the desired setting is obtained, tighten the lock nut on the dashpot against the bracket.

To set the idle speed on U.S. vehicles, refer to the Fuel System General Information Paragraph.

BBD SERIES CARBURETOR (1½")

INDEX

	Page		Page
Automatic Choke (well type)	2	Idle Speed Adjustment	33
Carburetor Adjustments	32	Cleaning Carburetor Parts	1
Accelerator Pump and Bowl Vent	32	Closed Crankcase Vent System	2
Choke Vacuum Kick	32	Disassembling Carburetor	28
Fast Idle Cam Position	32	Inspection and Reassembly	29
Fast Idle Speed (On Vehicle)	34	Specifications	85
Choke Unloader (Wide Open Kick)	33		

GENERAL INFORMATION

The Ball and Ball carburetor models BBD-4613S and BBD-4614S are used on the 383 cu. in. engine when the vehicles are equipped with a manual or automatic transmission respectively. These carburetors are identified by a tag attached to the air horn mounting screw.

Since the service procedures are identical on all BBD carburetors, the illustrations showing the various disassembly procedures will not always show any one specific carburetor.

The Ball and Ball carburetor is of the dual downdraft type. Each throat has its own throttle valve and main metering systems and are supplemented by the float, accelerating idle and power systems.

These carburetors are equipped with two idle limiter and one off idle mixture control screws (Fig. 1). These adjustments are set at the factory and no further adjustment of these screws should be necessary. However, if an adjustment is necessary, refer to "Rough Idle and Low Speed Surge" paragraph under General Information.

On each BBD series carburetor, the model number is stamped on metal tag attached to air horn. Do not remove or destroy this tag, as it is the only means provided for carburetor model identification. Before attempting to repair or overhaul carburetor, refer to model number and secure a repair kit for number indicated on tag.

SERVICE PROCEDURES

DISASSEMBLING CARBURETOR (Fig. 1)

(1) Insert three Tool T-109-287S and one Tool T-109-288S elevating legs through carburetor throttle body stud holes. (These tools are used to protect throttle valves from damage and to provide a suitable base for working.)

(2) Remove hairpin clip and disengage fast idle connector rod from throttle and fast idle levers.

(3) Remove hairpin clip and disengage accelerator rod from throttle lever and pump rocker arm.

(4) Remove vacuum hose between carburetor throttle body fitting and vacuum diaphragm.

(5) Remove clip from choke operating link and disengage link from diaphragm plunger and choke lever. (Fig. 1).

(6) Remove vacuum diphragm and bracket assembly and place to one side, to be cleaned as a special item. **A liquid cleaner may damage the diaphragm material.**

(7) Remove air horn retaining screws and lift air horn straight up and away from main body. Discard gasket (2 screws recessed).

(8) Disengage accelerator pump plunger from accelerator pump arm by pushing up on bottom of plunger and sliding plunger shaft off hook. Slide plunger out of air horn and remove compression spring and seat.

If old plunger can be used again or if a new plunger is to be installed, place plunger in a jar of clean

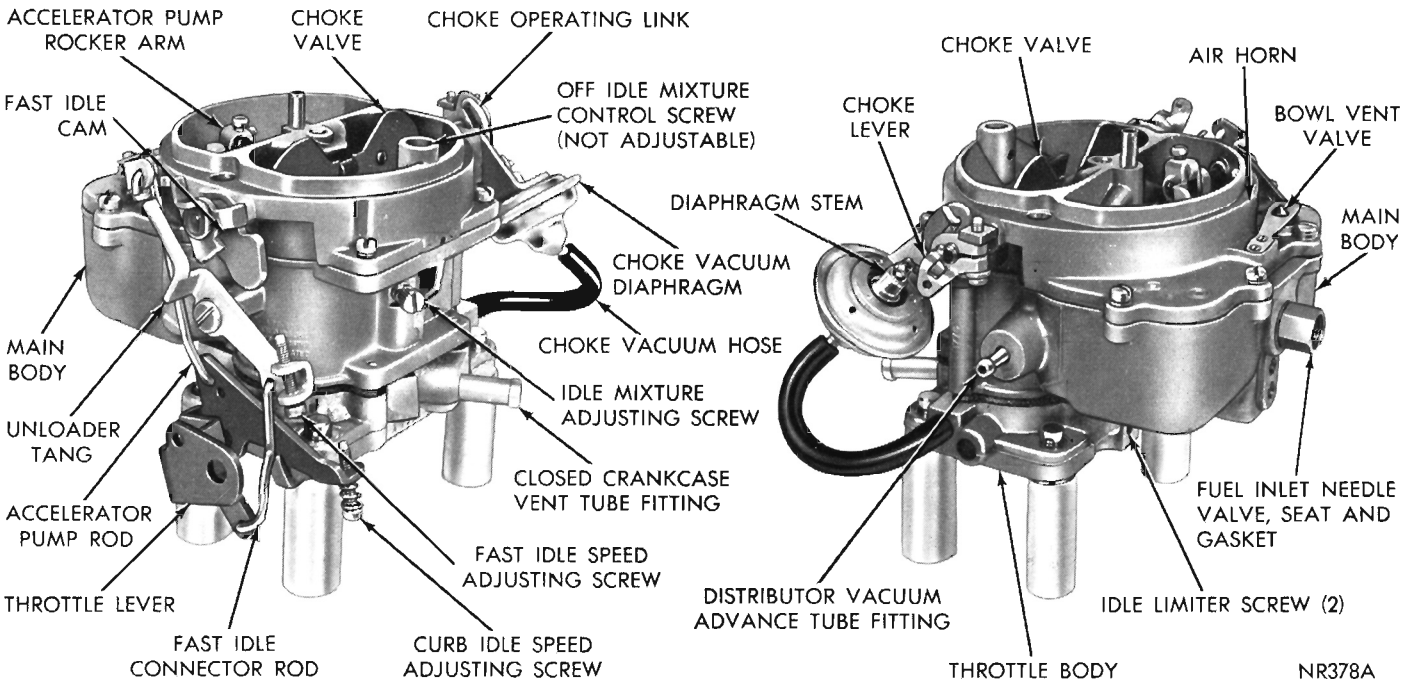

Fig. 1—Carburetor Assembly (BBD-4613S and BBD-4614S)

gasoline or kerosene to prevent leather from drying out.

(9) Remove fuel inlet needle valve, seat and gasket from main body.

(10) Lift out float fulcrum pin retainer, and lift out floats and fulcrum pin.

(11) Remove step-up piston and retaining screw and slide step-up piston and rods out of well, (Fig. 2). Lift out step-up piston spring. Remove step-up piston gasket from bottom of well.

(12) Remove main metering jets (Fig. 3).

(13) Remove venturi cluster screws, then lift venturi cluster and gaskets up and away from main body, (Fig. 4). Discard gaskets. **Do not remove idle orifice tubes or main vent tubes from cluster.** They can be cleaned in a solvent and dried with compressed air.

(14) Invert carburetor and drop out accelerator pump discharge check ball and intake check ball. (The intake check ball is the largest.)

(15) Remove screws that attach throttle body to main body. Separate the bodies and discard gasket.

The carburetor now has been disassembled into three sub-assemblies, the air horn, main body and throttle body and the components of each disassembled as far as necessary for cleaning and inspection.

It is usually not advisable to remove the throttle shaft or valves from the throttle body, unless wear or damage necessitates the installation of new parts.

There is about .005 inch clearance between the throttle shaft and the throttle shaft bores in the throttle body. Any clearance over .010 inch, a new throttle shaft and/or throttle body should be installed.

INSPECTION AND ASSEMBLY

Throttle Body

(1) Inspect the throttle shaft and throttle body for excessive wear. If either or both are worn to the point where the carburetor operation will be affected, replace as required.

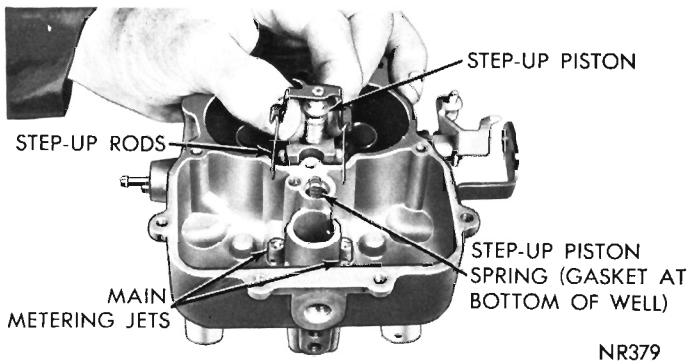

Fig. 2—Removing or Installing Step-Up piston

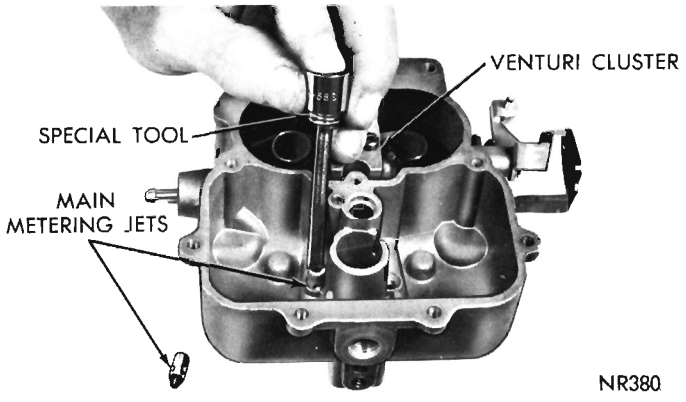

Fig. 3—Removing or Installing Main Metering Jets

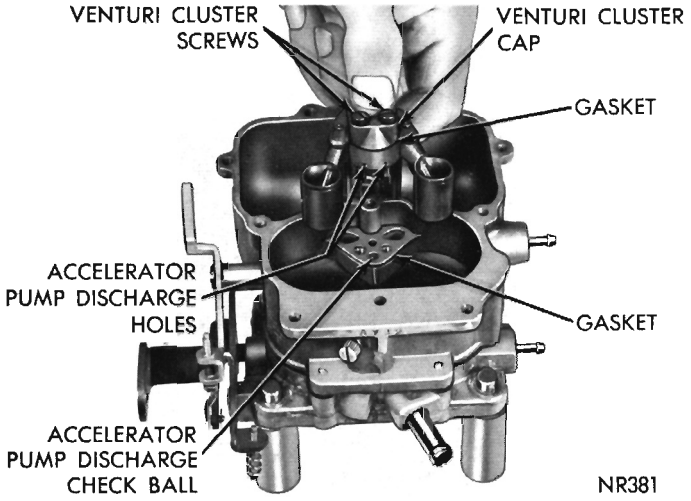

Fig. 4—Removing or Installing Venturi Cluster

During manufacture, the location of the idle transfer port and the spark advance control ports to the throttle valve, is carefully established for one particular assembly, (Fig. 5).

If a new shaft should be installed in an old, worn throttle body, it would be very unlikely that the original relationship of the ports to the valves would be obtained. Changing the relationship of the valves to the ports would adversely affect normal car operation between the speeds of 15 and 30 miles per hour. If it has been determined, however, that a new shaft or valves is to be installed, adhere to the following instructions:

(2) Mark position of throttle valves in bores.

(3) Remove screws that hold throttle valves to shaft and slide valves out of bores. **These screws are staked on the opposite side and care should be used at removal so as not to break off in the shaft.**

Remove the staked end of the screws with a file.

(4) Slide throttle shaft and lever out of body.

(5) Install new throttle shaft and lever.

(6) Install throttle valves in their respective bores (with valve numbers toward manifold). Install new screws but do not tighten. Hold valves in place (idle position) with fingers pressing on high sides of valves. Tap valves lightly with a screwdriver to seat in throttle bores. Tighten screws lightly. Hold up to a strong light to check for a proper position in bore. (They may have to be rotated slightly as the valves are eliptical.) When properly positioned tighten screws securely and stake, using pliers.

(7) Turn idle mixture adjusting screw lightly against its seat with fingers. Back off one full turn for approximate adjustment. DO NOT USE A SCREWDRIVER. **This screw has a left hand thread. Turn counterclockwise (Richer) and clockwise (Leaner).**

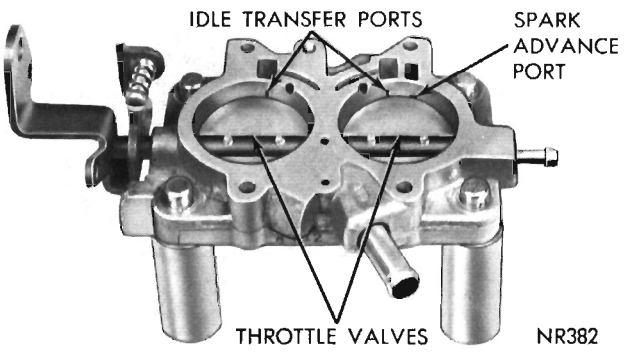

Fig. 5—Ports in Relation to Throttle Valves

Main Body

(1) Invert main body and place a new gasket in position and place throttle body on main body and align. Install screws and tighten securely.

(2) Install accelerator pump discharge check ball in discharge passage and check accelerator pump system; fuel inlet and discharge check balls as follows:

(3) Pour clean gasoline into carburetor bowl, approximately 1/2 inch deep. Remove pump plunger from jar of gasoline, flex leather several times, then slide down into pump cylinder. Raise plunger and press lightly on plunger shaft to expel all air from pump passage.

(4) Using a small clean brass rod, hold discharge check ball down firmly on its seat. Again raise plunger and press downward. No fuel should be emitted from either intake or discharge passage, (Fig. 6).

If any fuel does emit from either passage, it indicates the presence of dirt or a damaged check ball seat. Check the passage again and repeat test. If leakage is still evident, install a new check ball. The fuel inlet check ball is located at the bottom of the plunger well.

(5) Install new gaskets on venturi cluster, and install in position in main body. Install cluster screws and tighten securely. Test pump discharge by pressing pump plunger down. Two fine streams of fuel

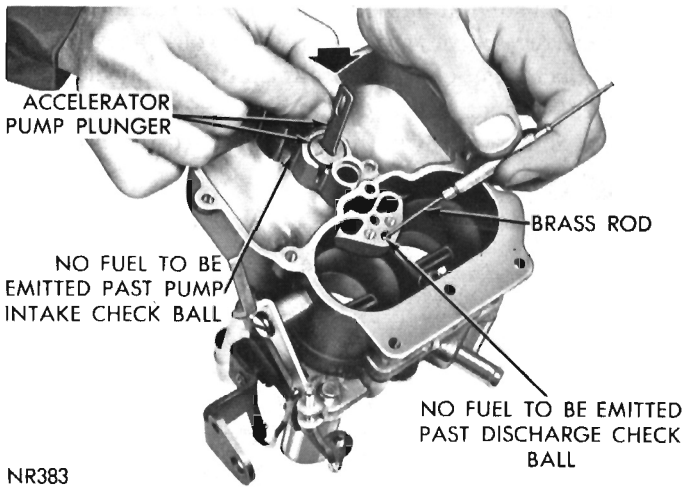

Fig. 6—Testing Accelerator Pump Intake and Discharge Check Balls

should be forced from cluster. If either stream is restricted or diverted, remove cluster and reclean. After test, pour fuel from the bowl and remove pump plunger.

(6) Install main metering jets. Tighten securely. (Fig. 3.)

(7) Before installing step-up piston, be sure step-up rods are able to move freely, each side of the vertical position, (Fig. 7). The step-up rods must be straight, smooth and free to move forward and backward from vertical.

(8) Slide step-piston gasket down into position in piston well, then install the step-up piston spring, step-up piston and rods. Carefully guide step-up rods into main metering jets (Fig. 2). Install retaining screw and tighten securely. Check piston for free operation in well.

A step-up piston stuck in the **Up** position will cause a rich mixture at part throttle, whereas a piston stuck in the **Down** position will cause a lean mixture at wide open throttle and poor acceleration.

Measuring Float Setting

The carburetors are equipped with a rubber-tipped fuel inlet needle. The rubber tip is flexible enough to make a good seal on the needle seat, and to give increased resistance to flooding. Care should be taken to perform this operation accurately in order to secure the best performance and fuel economy.

(1) To correctly set float height when carburetor is being overhauled, install floats with fulcrum pin and pin retainer in main body.

(2) Install rubber-tipped needle, seat and gasket in body and tighten securely.

(3) Invert main body so that weight of float only is forcing needle against seat. Hold finger against retainer to fully seat fulcrum pin.

(4) Using Tool T-109-280 or a "T" scale, measure float, (Fig. 8). There should be 5/16 inch from surface of fuel bowl to crown of each float at center.

If an adjustment is necessary, hold the floats on bottom of the bowl and bend float lip toward or away

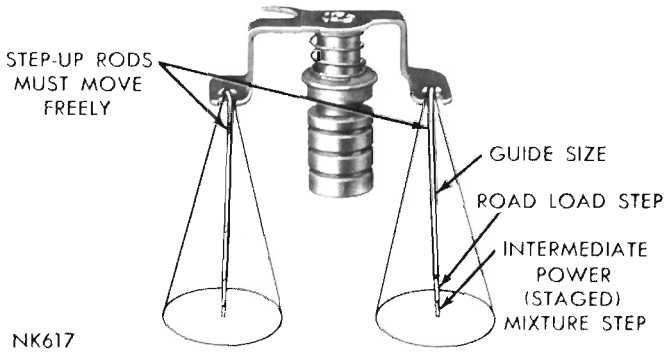

Fig. 7—Step-Up Rods Free Play

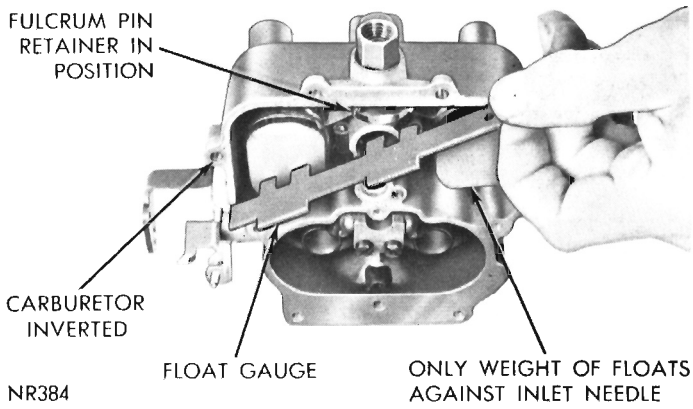

Fig. 8—Checking Float Setting

from needle. Recheck the 5/16 inch setting again and repeat the lip bending operation as required.

CAUTION: When bending the float lip, do not allow the lip to push against the needle as the synthetic rubber tip can be compressed sufficiently to cause a false setting which will affect correct level of fuel in the bowl.

After being compressed, the tip is very slow to recover its original shape.

CAUTION: It is very important that the float lip be perpendicular to the needle or slanted not more than ten degrees away from the needle when the float height is correct.

Air Horn

(1) Test freeness of choke mechanism in air horn. The choke shaft must float free to operate correctly. If choke shaft sticks in bearing areas, or appears to be gummed from deposits in air horn, a thorough cleaning will be required.

(2) Remove accelerator pump plunger from gasoline, slide compression spring and spring seat over shaft. Install assembly in air horn and engage with accelerator pump arm.

(3) Place a new gasket on main body, and install air horn. Install attaching screws and tighten securely. (When installing air horn, be sure leather on plunger does not wrinkle or fold back.)

(4) Engage accelerator pump rod with pump rocker arm and install loose end in center hole of throttle lever. Install hairpin clip to secure (Fig. 1).

(5) Engage fast idle connector rod in fast idle lever and throttle lever. Install hairpin clip to secure.

Choke Vacuum Diaphragm

Inspect the diaphragm vacuum fitting to be sure that the passage is not plugged with foreign material. Leak check the diaphragm to determine if it has internal leaks. To do this, first depress the diaphragm stem, then place a finger over the fitting to seal the opening. Release the stem. If the stem moves more than 1/16 inch in ten (10) seconds, the leakage is

excessive and the assembly must be replaced.

Install the diaphragm assembly on the airhorn as follows:

(1) Assemble diaphragm to airhorn and tighten attaching screws securely.

(2) Install choke operating link in position between diaphragm plunger (stem) and choke lever. Install clip to secure.

(3) Inspect rubber hose for cracks before placing it on correct carburetor fitting. (Fig. 1). Do not connect vacuum hose to diaphragm fitting until after vacuum kick adjustment has been made. (See Carburetor Adjustments.)

(4) Loosen choke valve attaching screws slightly. Hold valve closed, with fingers pressing on high side of valve. Tap valve lightly with a screw driver to seat in air horn. Tighten attaching screws securely and stake by squeezing with pliers.

CARBURETOR ADJUSTMENTS

It is very important that the following adjustments are made on a reconditioned carburetor and in the sequence listed:

Accelerator Pump

(1) Back off idle speed adjusting screw. Open choke valve so that fast idle cam allows throttle valves to be completely seated in bores. Be sure that pump connector rod is installed in outer hole of throttle lever.

(2) Close throttle valves tightly. Measure the distance between top of air horn and end of plunger shaft, (Fig. 9). This measurement should be 1.00 inch.

(3) To adjust pump travel, bend pump connector rod using Tool T-109-213, at lower angle of rod, until correct setting has been obtained.

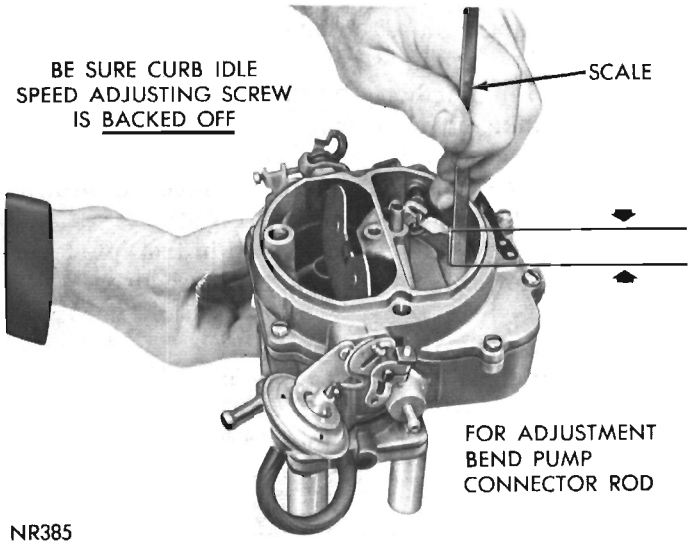

Fig. 9—Checking Accelerator Pump Setting

Fast Idle Speed and Cam Position Adjustment

The fast idle engine speed adjustment should be made on the vehicle, as described in the Fast Idle Speed Adjustment (On the Vehicle) Paragraph. However, the Fast Idle Cam Position Adjustment can be made on the bench. This adjustment is important to assure that the speeds of each step of the cam occur at the proper time during engine warm-up.

(1) With fast idle speed adjusting screw contacting second highest speed step on fast idle cam, move choke valve toward closed position with light pressure on choke shaft lever.

(2) Insert specified drill (see specifications) between choke valve and wall of air horn. An adjustment will be necessary if a slight drag is not obtained as drill is being removed.

(3) If an adjustment is necessary, bend stop on choke shaft, using Tool T-109-22 until correct valve opening has been obtained. (Fig. 10).

Vacuum Kick Adjustment—This test can be made **ON** or **OFF** vehicle.

The choke diaphragm adjustment controls the fuel delivery while the engine is running. It positions the choke valve within the airhorn by action of the linkage between the choke shaft and the diaphragm. The diaphragm must be energized to measure the vacuum kick adjustment. Use either a distributor test machine with a vacuum source, or vacuum supplied by the vehicle.

(1) If adjustment is to be made with engine running, disconnect fast idle linkage to allow choke to close to the kick position with engine at curb idle. If an auxiliary vacuum source is to be used, open throttle valves (engine not running) and move choke to closed position. Release throttle first, then release choke.

(2) When using an auxiliary vacuum source, discon-

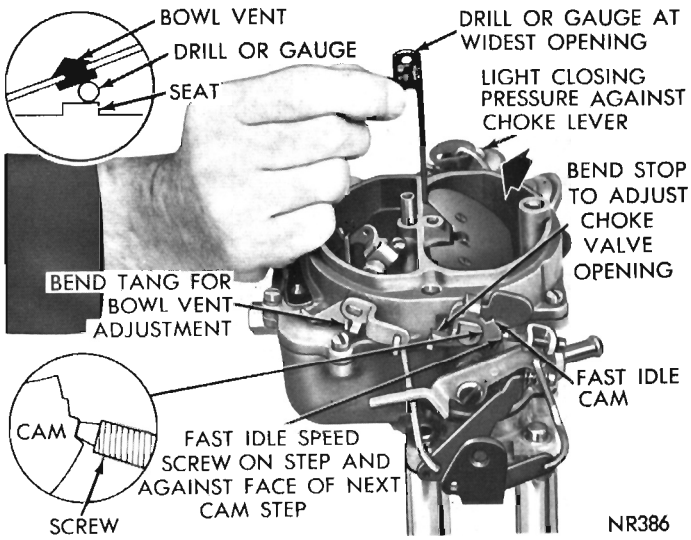

Fig. 10—Fast Idle Cam Position Adjustment

nect vacuum hose from carburetor and connect it to hose from vacuum supply with a small length of tube to act as a fitting. Removal of hose from diaphragm may require forces which damage the system. Apply a vacuum of 10 or more inches of mercury.

(3) Insert specified drill (refer to Specifications) between choke valve and wall of air horn (Fig. 11). Apply sufficient closing pressure on lever to which choke rod attaches to provide a minimum choke valve opening without distortion of diaphragm link. Note that the cylindrical stem of diaphragm will extend as internal spring is compressed. This spring must be fully compressed for proper measurement of vacuum kick adjustment.

(4) An adjustment will be necessary if a slight drag is not obtained as drill is being removed. Shorten or lengthen diaphragm link to obtain correct choke opening. Length changes should be made carefully by bending (open or closing) the bend provided in diaphragm link. **CAUTION: DO NOT APPLY TWISTING OR BENDING FORCE TO DIAPHRAGM.**

(5) Reinstall vacuum hose on correct carburetor fitting. Return fast idle linkage to its original condition if disturbed as suggested in Step No. 1.

(6) Make following check. With no vacuum applied to diaphragm, the **CHOKE VALVE SHOULD MOVE FREELY** between open and closed positions. If movement is not free, examine linkage for misalignment or interferences caused by bending operation. Repeat adjustment if necessary to provide proper link operation.

Choke Unloader (Wide Open Kick)

The choke unloader is a mechanical device to partially open the choke valve at wide open throttle. It is used to eliminate choke enrichment during cranking of an engine. Engines which have been flooded or stalled by excessive choke enrichment can be cleared by use of the unloader. Adjust the choke unloader as follows:

(1) Hold throttle valves in wide open position. Insert specified drill (see Specifications) between upper edge of choke valve and inner wall of air horn. (Fig. 12.)

(2) With a finger lightly pressing against shaft lever, a slight drag should be felt as drill is being withdrawn. If an adjustment is necessary, bend unloader tang on throttle lever until correct opening has been obtained. (Fig. 13). (Use Tool T-109-22.)

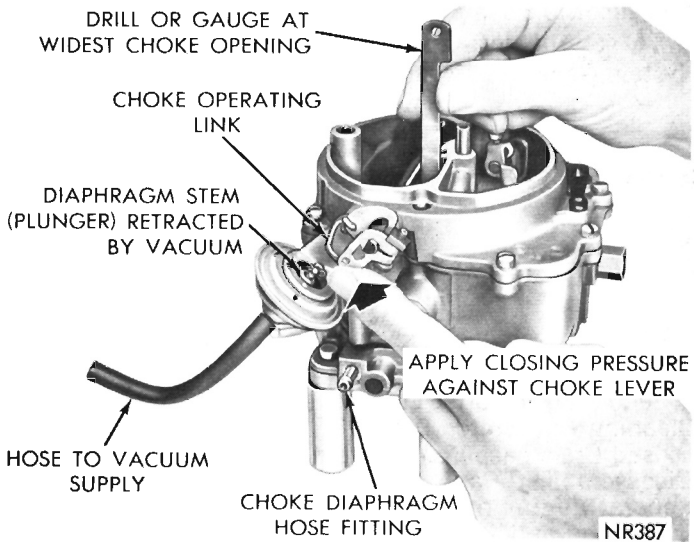

Fig. 11—Checking Choke Vacuum Kick Setting

Bowl Vent Adjustment

(1) With throttle valves at curb idle, there should be 1/16 inch clearance between bowl vent valve and air horn, when measured at outer-most or largest dimension with a drill shank.

(2) If an adjustment is necessary, bend short tang on vent valve operating lever, using Tool T-109-22 until correct opening has been obtained. **Any adjustment to the accelerator pump means, that the bowl vent valve must be readjusted.**

Idle Speed Adjustment (Curb Idle)

(Refer to General Information at Front of Section).

Measuring Float Setting (On Vehicle)

(1) Remove hairpin clip and disengage accelerator pump rod from throttle lever and pump rocker arm. Disconnect automatic choke rod by unsnapping clip.

(2) Remove air horn attaching screws and lift air horn straight up and away from main body. Remove gasket.

(3) Set float fulcrum pin by pressing a finger against fulcrum pin retainer.

There should be enough fuel in the bowl to raise floats so that the lip bears firmly against needle. Additional fuel may be admitted by slightly depressing

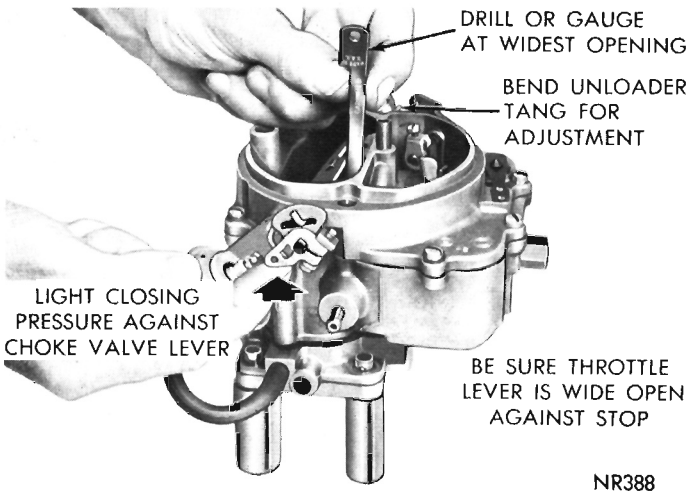

Fig. 12—Checking Choke Unloader Setting

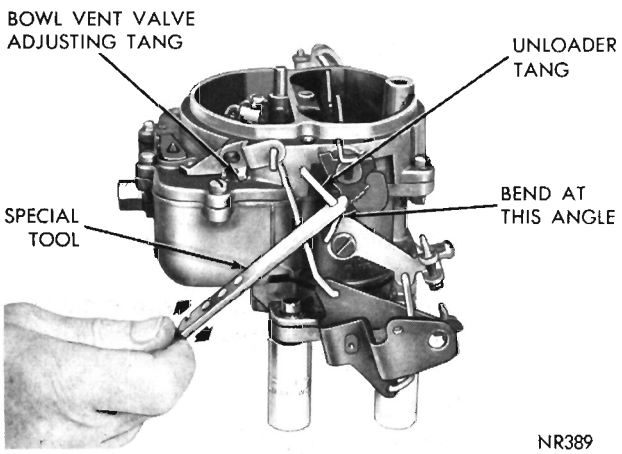

Fig. 13—Bending Choke Unloader Tang

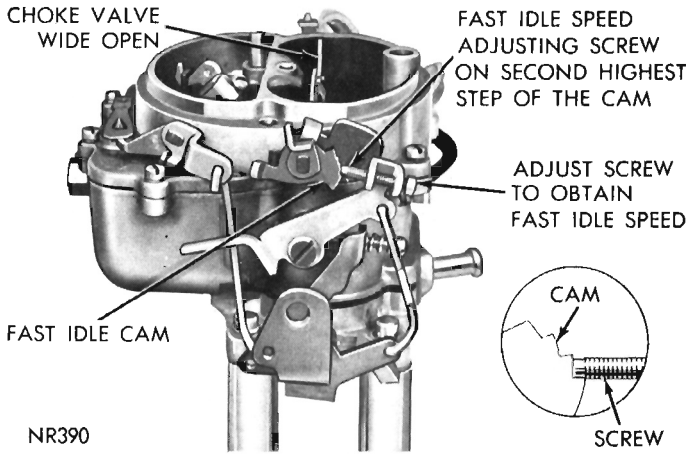

Fig. 14—Fast Idle Speed Adjustment (On Vehicle)

float. If fuel pressure in the line is insufficient to force additional fuel into bowl, add necessary fuel from a clean container.

WARNING: Since the manifold may be hot, it is dangerous to spill fuel onto these surfaces. Take the necessary precautions to avoid spillage.

(4) With only pressure from buoyant float holding lip against inlet needle, check float setting, using Tool T-109-280, or a "T" scale. There should be 5/16 inch from surface of bowl (gasket removed) to crown of floats at center.

If an adjustment is necessary, hold the floats on the bottom of the bowl, then bend the float lip toward or away from the needle. Recheck the 5/16 inch setting again, then repeat the lip bending operation as required. **When bending the float lip, do not allow the lip to push against the needle as the rubber tip can be compressed sufficiently to cause a false setting which will affect correct level of fuel in the bowl. After being compressed, the rubber tip is very slow to recover its original shape. It is very important that the float lip be perpendicular to the needle or slanted not more than 10 degrees away from the needle when the float is set correctly.**

(5) After float has been correctly set, reassemble the air horn.

Fast Idle Speed Adjustment (On Vehicle)

Fast idle engine speed is used to overcome cold engine friction, stalls after cold starts and stalls because of carburetor icing. Set this adjustment after the vehicle odometer indicates over 500 miles to insure a normal engine friction level. Prepare engine by driving at least 5 miles. Connect a tachometer and set the curb idle speed and mixture, then proceed as follows:

(1) With engine off and transmission in PARK or NEUTRAL position, open throttle slightly.

(2) Close choke valve until fast idle screw can be positioned on second highest-speed step of fast idle cam (Fig. 14).

(3) Start engine and determine stabilized speed. Turn fast idle speed screw in or out to secure specified speed. (See Specifications.)

(4) Stopping engine between adjustments is not necessary. However, reposition fast idle speed screw on cam after each speed adjustment to provide correct throttle closing torque.

To set the idle speed on vehicles, refer to Fuel System General Information Paragraph.

AVS SERIES CARBURETOR

INDEX

	Page
Automatic Choke (well type)	2
Carburetor Adjustments	40
Accelerator Pump and Bowl Vent	41
Air Valve Secondary	43
Bowl Vent Valve	43
Choke Unloader (Wide Open Kick)	41
Choke Vacuum Kick	41
Fast Idle Cam Position	40
Fast Idle Speed (On Vehicle)	43
Idle Speed	43
Secondary Throttle Lever	42
Secondary Throttle Lockout	42
Cleaning Carburetor Parts	1
Closed Crankcase Vent System (Group 9—Engine)	
Disassembling Carburetor	35
General Information	35
Inspection and Reassembly	38
Specifications	86

GENERAL INFORMATION

The Carter carburetor model AVS-4711S is used on the 383 cu. inch engine when the vehicle is equipped with a manual transmission. The carburetor is supplied with a dash pot which is mounted on the air horn. The dash pot (used only on manual transmission equipped vehicles) retards the return of the throttle to idle position. **The proper adjustment of the dash pot is very important (See Carburetor Adjustments.)** The Carter carburetor model AVS-4616S is used on the 383 cu. in. engine respectively, when the vehicle is equipped with the automatic transmission. Carburetor Models AVS-4617S and AVS-4618S are used on the 440 cu. in. engine when the vehicles are equipped with the manual or automatic transmissions respectively. AVS-4611S and AVS-4612S are used on the 340 cu. in. engine when equipped with manual or automatic transmission respectively.

Carburetor models AVS-4639S and AVS-4638S are used on the 340 and 383 cu. in. engines respectively, when the vehicles are equipped with automatic transmission and air conditioning only. AVS-4640S is used on the 440 cu. in. engine when the vehicle is equipped with automatic transmission and air conditioning only. These carburetors are equipped with a hot idle compensator. This device is a thermostatically operated air bleed, to relieve an over-rich condition at idle. This condition is the result of excessive heat and resultant overrich mixtures.

Carburetor models AVS-4615S and AVS-4682S are used on the 383 cu. in. engine when the vehicle is equipped with manual and automatic transmissions respectively (without air conditioning.)

Since the service procedures are identical on all Carter AVS carburetors, the illustrations showing the various disassembly procedures will not always show any one specific carburetor.

The throttle valves of the secondary half of the carburetor are mechanically connected to the primary valves and open with the primary after an approximate 60° lag; and continue to open until both primary and secondary throttle valves reach the wide open position simultaneously. As engine speed increases, the forces exerted by the velocity of intake air down through the venturis of the carburetor increases and tends to overcome the air valve spring attached to the air valve, permitting the air valve to position its self according to engine requirements.

The AVS (air valve secondary) carburetor contains many features, some of which are the locations for the step-up rods and pistons. The step-up rods, pistons and springs are accessible for service without removing the air horn or the carburetor from the engine. The primary venturi assemblies are replaceable and contain many of the calibration points for both the high and low speed system. One fuel bowl feeds both the primary and secondary nozzles on the right side while the other fuel bowl takes care of the primary and secondary nozzles on the left side. This provides improved performance in cornering, quick stops and acceleration.

All the major castings of the carburetor are aluminum, with the throttle body cast integral with the main body. This allows an overall height reduction in the carburetor. The section containing the accelerator pump is termed the primary side of the carburetor. The rear section is the secondary. The five conventional systems used in previous four barrel carburetors are also used in this unit. The five conventional systems are, two float systems, two low speed systems, (primary side only) two high speed systems, one accelerator pump system and one automatic choke control system.

These carburetors are equipped with two idle limiter and one off idle mixture control screws (Fig. 1). These adjustments are set at the factory and no further adjustment of these screws should be necessary. However, if an adjustment is necessary, refer to "Rough Idle and Low Speed Surge" paragraph under General Information.

SERVICE PROCEDURES

DISASSEMBLING CARBURETOR (Fig. 1)

(1) Place carburetor assembly on repair stand Tool C-3400 or T-109-287S elevating legs. These tools are used to protect throttle valves from damage and to provide a suitable base for working.

(2) Remove hairpin clip that attaches fast idle connector rod to choke lever. Disengage rod from lever, then swing rod at an arc until it can be disengaged from fast idle cam.

(3) Remove hairpin clip that holds throttle connector rod in center hole of accelerator pump arm. Disengage rod from arm and lever, then remove from carburetor.

(4) Remove screws attaching step-up piston and rod cover plates. Hold cover down with a finger to prevent piston and rods from flying out. Lift off plates and slide step-up pistons and rods out of air horn, (Fig. 2). Remove step-up piston springs.

(5) Remove vacuum hose between carburetor throttle body and vacuum diaphragm.

(6) Remove clip from choke operating link and dis-

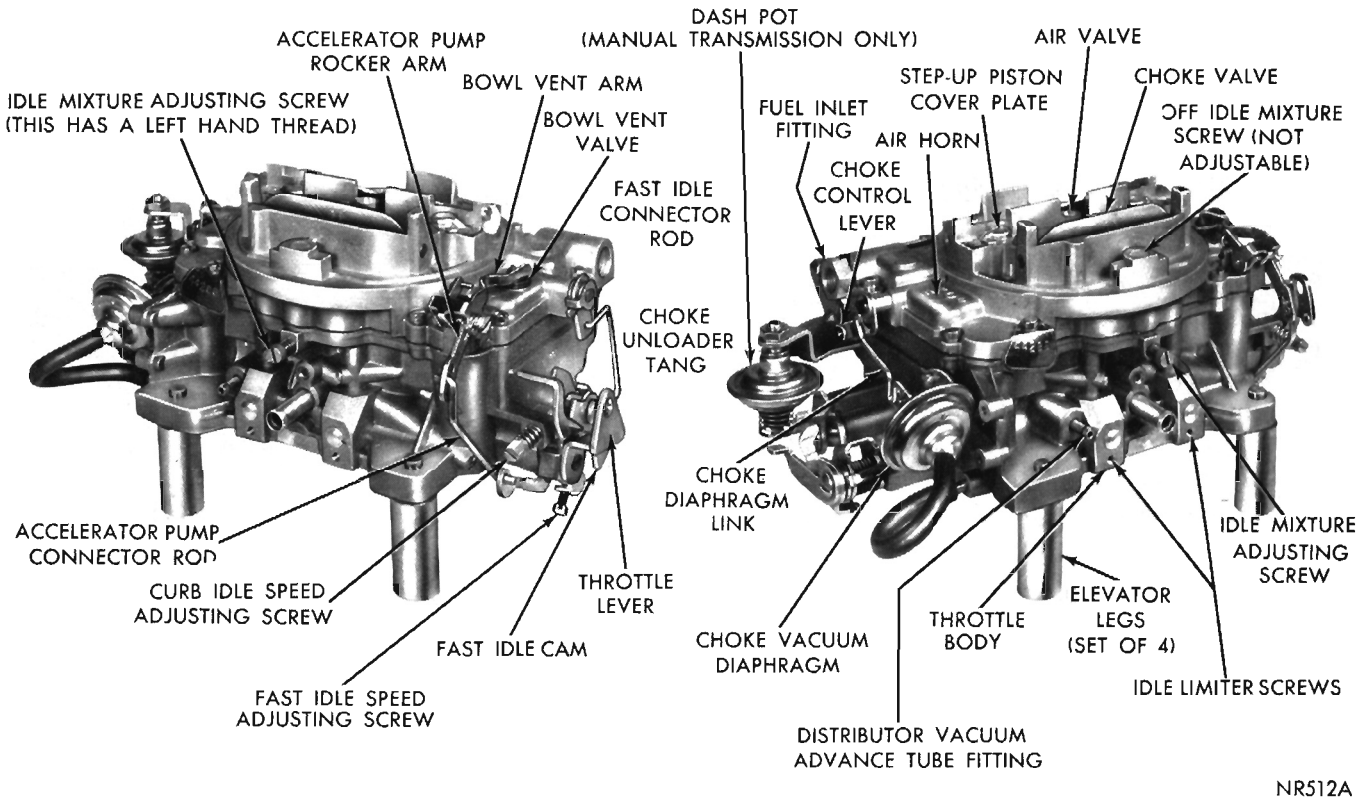

Fig. 1—Carburetor Assembly

engage link from diaphragm plunger (stem) and choke lever. (Fig. 1).

(7) Remove vacuum diaphragm and bracket assembly and place to one side to be cleaned as a special item. A liquid cleaner may damage diaphragm material.

(8) Remove eight screws that attach air horn to main body. Lift air horn straight up and away from main body. When removing air horn, use care so as not to bend or damage floats. Remove accelerator pump, plunger lower spring from pump cylinder. Remove dash pot (if so equipped).

(9) Remove hot idle compensator and gasket, (if so equipped).

Disassembling the Air Horn

Place air horn in an inverted position on bench (to protect the floats) then proceed to disassemble as follows:

(1) Using a suitable Tool, remove float fulcrum pins, (left and right) then lift float up and out of bosses on air horn. It is suggested that the float on the pump side be marked so that floats can be reinstalled in their respective positions.

(2) Remove two needle valves from their respective seats, after marking one on pump side for identification. Using a wide blade screw driver, remove needle valve seats. Be sure each needle valve is returned to its original seat at reassembly.

(3) Remove shoulder screw and spring holding accelerator pump rocker arm and bowl vent arm to air horn. Remove arms and disengage pump link from pump stem. Slide accelerator pump plunger and spring out of air horn. Remove gasket.

(4) Place accelerator pump plunger in a jar of clean gasoline or kerosene, to prevent leather from drying out.

(5) Remove fuel inlet fitting and filter screen from air horn.

(6) Test freeness of choke mechanism in air horn. The choke shaft must float free to operate correctly. If choke shaft sticks in bearing area, or appears to be gummed from deposits in air horn, a thorough cleaning will be required.

Main Body Disassembly

(1) Remove screws that attach accelerator pump jet housing to main body. Lift out jet housing and gasket (Fig. 3). Discard gasket. Now, invert main body and drop out discharge check needle from discharge passage.

(2) Using Tool T-109-58, remove main metering jets (primary side), (Fig. 4). **The primary and secondary main metering jets are not interchangeable. It is very important that these jets be installed in their respective locations in the main body at reassembly.**

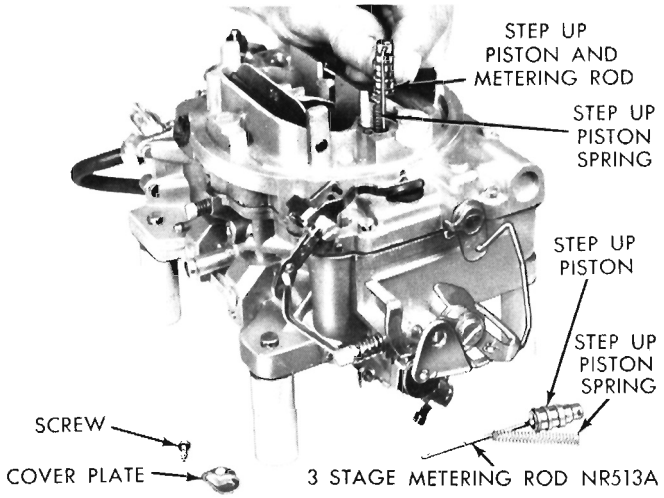

Fig. 2—Removing or Installing Step-Up Pistons and Rods

(3) Again using Tool T-109-58, remove main metering jets (secondary side), (Fig. 4). Remove intake check.

(4) Remove screws that attach primary venturi (choke and pump side) to main body. Lift venturi straight up and away from main body, (Fig. 5). Discard gaskets. **The venturi assemblies are not interchangeable, side for side and must be reinstalled in their original locations at reassembly.**

(5) Using Tool T-109-59, screw driver bit, remove accelerator pump intake check valve located inside fuel bowl, adjacent to accelerator pump cylinder.

(6) Remove idle mixture adjusting screw. **(Caution: This screw has a left hand thread.)**

The carburetor now has been disassembled into two units, namely air horn and the main and throttle body casting. The component parts of each have been disassembled as far as necessary for cleaning and inspection.

It is usually not advisable to remove the throttle

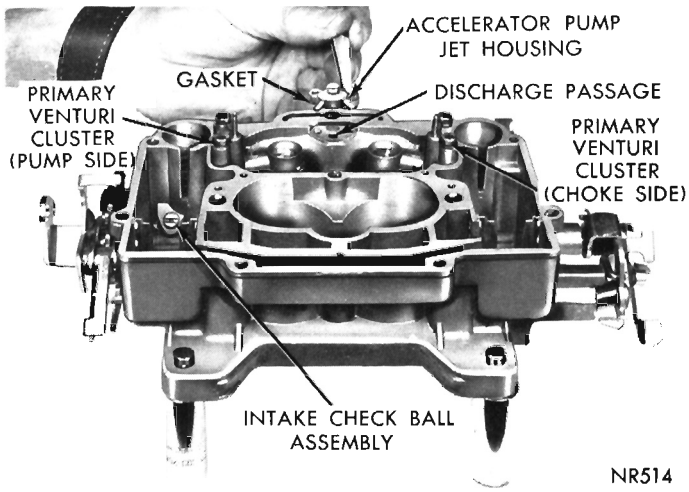

Fig. 3—Removing or Installing Accelerator Pump Jet Housing

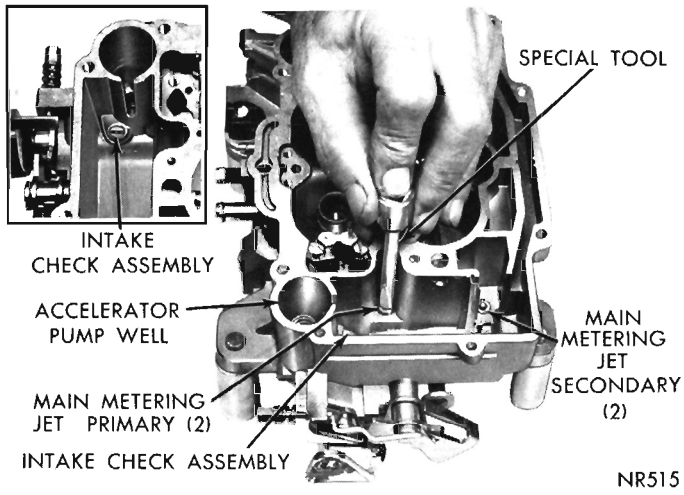

Fig. 4—Removing or Installing Main Metering Jets

shafts or valves unless wear or damage necessitates the installation of new parts. During the manufacture of the carburetor, the location of the idle transfer ports and the idle discharge ports to the valve is carefully established for one particular assembly, (Fig. 6). The valves are milled to give proper port relation.

If new throttle shafts should be installed in an old worn body, it would be very unlikely that the original relationship of these ports to the valves would be obtained. A very slight change in the port relationship to the valves would adversely affect normal carburetor operation, between the speeds of 15 and 30 miles per hour.

It is recommended that if the throttle shafts are excessively worn, that a new carburetor be installed. However, if the throttle valves have become nicked, burred or damaged, new valves may be installed, providing the following instructions are carefully followed. **The screws that attach the throttle valves are staked on the opposite side and care should be used in**

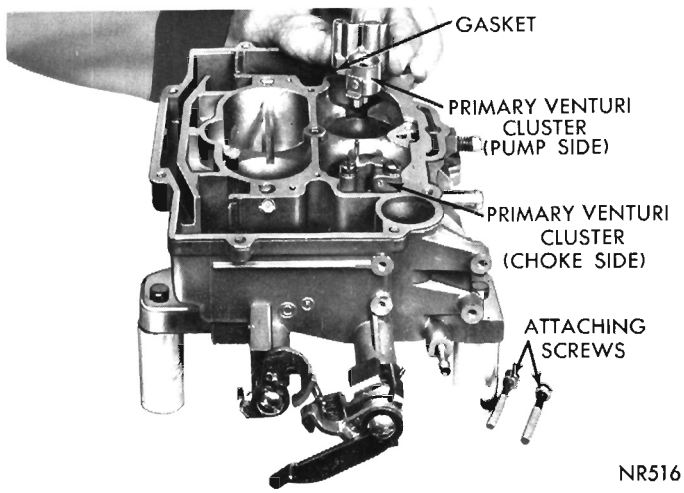

Fig. 5—Removing or Installing Primary Venturi Cluster

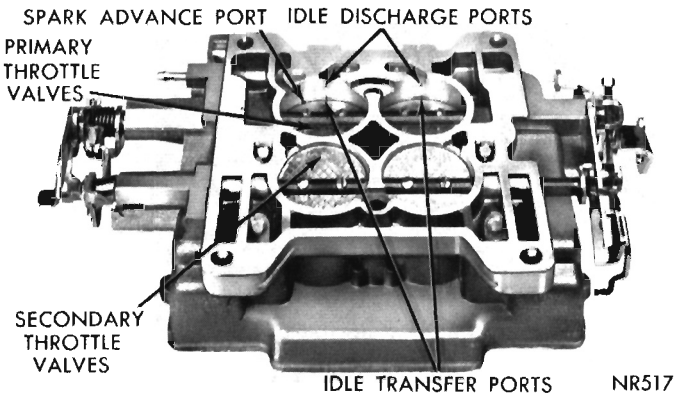

Fig. 6—Ports in Relation to Throttle Valves

removal so as not to break the screws in the throttle shaft. Remove the staked portion of the screws with a file.

Remove the screws that attach the primary throttle valves to the throttle shaft and slide valve (or valves) out of bores.

Remove the screws that attach the secondary throttle valves to the throttle shaft and slide valve (or valves) out of bores.

The primary valves and secondary valves are not interchangeable and should be kept separate in order that each may be returned to its respective bore. (Fig. 7).

INSPECTION AND REASSEMBLY

(1) Slide primary throttle valve (or valves) into their respective bores, install new screws, but do not tighten. Be sure idle speed adjusting screw is backed out. Hold valves in place with fingers. (Fingers pressing on high side of valves.)

(2) Tap valves lightly in this position, tighten screws securely. Stake screws by squeezing with pliers.

(3) Install idle mixture adjusting screw and turn lightly against its seat with fingers. Back off one full turn for approximate adjustment. **DO NOT USE A SCREWDRIVER. This screw has a left hand thread. Turn Counter clockwise (Richer) and clockwise (Leaner).**

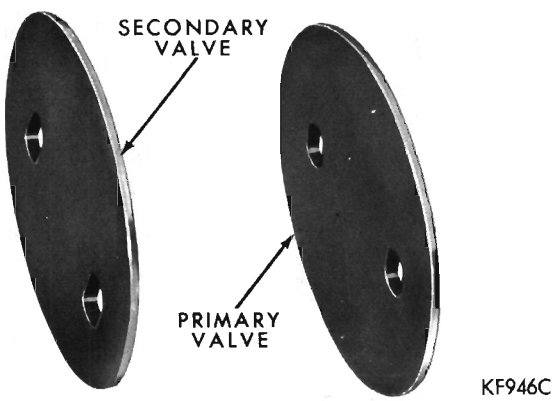

Fig. 7—Throttle Valve Identification

(4) **Be sure all the metering holes and vent tubes are clean, in the primary venturi.** Place new primary venturi gaskets in position, then install the primary venturi (pump and choke side) by lowering straight down on gaskets. (Fig. 5). Install attaching screws and tighten securely.

(5) Install primary and secondary main metering jets, using Tool T-109-58. (Fig. 4.) Tighten jets securely. Install intake check.

(6) Install accelerator pump intake check ball using Tool T-109-59.

(7) Install hot idle compensator and gasket, (if so equipped). Tighten screws securely.

Accelerator Pump Test

(1) Pour clean gasoline into carburetor bowl (approximately 1/2 inch deep). Remove accelerator pump plunger from jar of gasoline. Flex leather several times, then slide into pump cylinder.

(2) Install accelerator pump discharge check needle in discharge passage. Raise pump plunger and press lightly on plunger shaft to expel air from pump passages. Using a small clean brass rod, hold discharge check needle firmly on its seat. Again raise plunger and press downward. No fuel should be emitted from either the intake or discharge passage.

(3) If fuel does emit from intake passage, remove intake check ball and reclean the passage. Fuel leakage at discharge check needle indicates presence of dirt or a damaged check needle. Clean again and then install a new check needle. Retest for leakage.

(4) If either intake check assembly or discharge check needle leaks after above test and service fix, attempt to reseat as follows:

Intake Check Ball

Remove the intake check assembly from the throttle body. Install a new check assembly, then retest as described previously (Fig. 4).

Discharge Check Needle

(1) With discharge check needle installed, insert a piece of drill rod down on needle. Lightly tap drill rod with a hammer to form a new seat. Remove and discard old needle and install a new one. Retest as described previously. If service fix does not correct the condition, a new carburetor will have to be installed.

(2) Install accelerator pump discharge check needle, jet housing and gasket. Install housing and attaching screws. Tighten screws securely.

(3) Press down on accelerator pump plunger shaft, and as plunger is being depressed, a clear straight

stream should emit from each jet. If streams are not identical, (if either one is diverted or restricted) a new accelerator pump jet housing should be installed. After test, pour gasoline from carburetor bowl and remove pump plunger.

Assembling the Air Horn

(1) Slide fuel inlet screen into fuel line fitting, then install in air horn. Tighten securely.

(2) Check to see if leather on accelerator pump plunger is hard, cracked or worn. If any sign of wear or deterioration is evident, install a new plunger assembly. Install pump link.

(3) Place pump arm in position over boss of air horn and engage pump link. Install bowl vent arm in position over pump arm. Slide spring over pivot screw and install through arms and boss. Be sure shoulder of screw enter arms. Tighten securely. Engage ends of spring with tang on vent arm and pin on air horn. Check for proper operation.

The carburetors are equipped with synthetic rubber tipped fuel inlet needles. The needle tip is a rubber material which is not affected by gasoline and is stable over a wide range of temperatures. The tip is flexible enough to make a good seal on the needle seat, and to give increased resistance to flooding.

The use of new inlet needles require that care be used when making float adjustments. Avoid applying any pressure on the floats which might compress the tip of the fuel inlet needles. **The tip can be compressed sufficiently to cause a false setting which will affect correct level of fuel in the bowl.**

(4) Place a new air horn to main body gasket in position on air horn, then install float needle valve seats. (Be sure each needle seat and needle is reinstalled in its original position.)

(5) Slide right and left floats into position in air horn, then install float fulcrum pins. **(Be sure marked float is installed on pump side of the air horn.) See disassembly procedures.**

(6) After floats have been installed, check float alignment, level and drop settings as follows:

Float Alignment Setting

(1) Sight down side of each float shell to determine if side of the float is parallel to outer cage of air horn casting (Fig. 8).

(2) If sides of float are not in alignment with edge of casting, bend float lever by applying pressure to end of float shell with thumb. **To avoid damage to the float, apply only enough pressure to bend the float lever.**

(3) After alining floats, remove as much clearance as possible between arms of float lever and lugs of air horn. To do this, bend float lever. The arms of float lever should be as parallel as possible to inner surfaces of lugs of casting.

Float Level Setting

(1) With air horn inverted, air horn gasket in place and float needle seated, slide float gauge (refer to specifications for carburetor being worked on) between top of the float (at outer end) and air horn gasket, (Fig. 9). Float should just touch gauge (T-109-107).

(2) Check other float in same manner. If an adjustment is necessary, bend float arm using Tool T-109-22, until correct clearance has been obtained. After bending arm, recheck the float alignment.

Float Drop Setting

Float drop is the distance the floats move from the inverted air horn (float level setting position) to the airhorn in upright position.

(1) With air horn inverted (upside down) place air horn in upright position and measure the distance floats move from inverted to upright position. This measurement should be 1/2 inch. (Fig. 10). Air horn gasket installed. If an adjustment is necessary, bend stop tabs on float levers until correct drop setting has been obtained. Bend tab toward needle seat to lessen drop, or away from seat to increase drop.

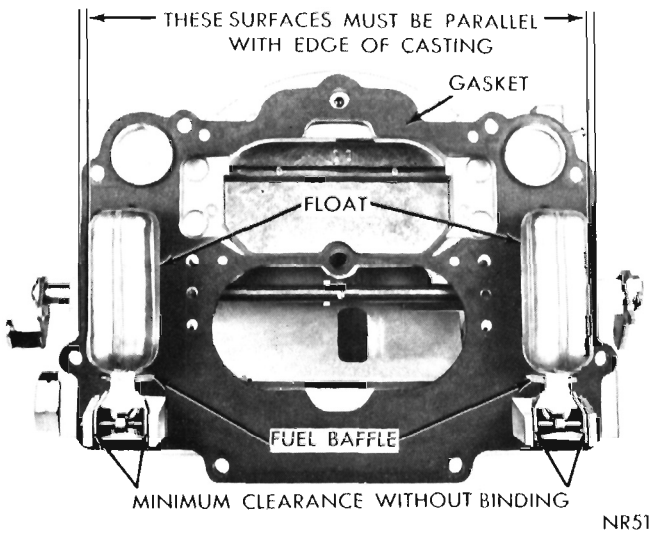

Fig. 8—Checking Float Alignment

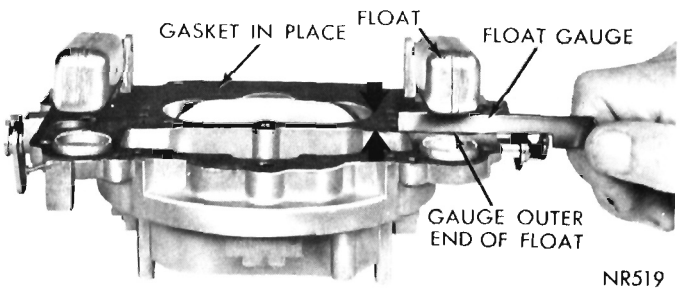

Fig. 9—Checking Float Height

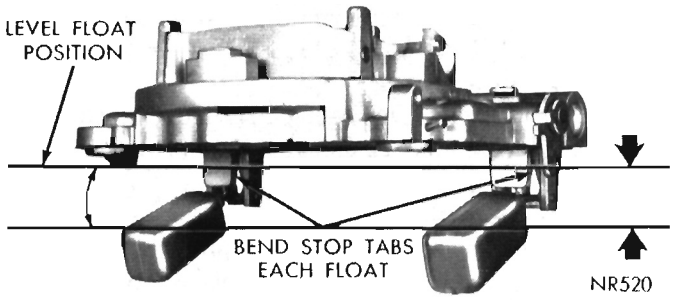

Fig. 10—Checking Float Drop

(2) After floats have been checked and adjusted, continue to assemble carburetor as follows:

(3) Place accelerator pump plunger lower spring in pump cylinder, then lower air horn carefully down on main body. Care must be taken to center small brass main bleed tubes so that they will pass through holes in air horn without being damaged. **Be sure the fuel baffles on the air horn, slide down in front, (bowl side) of the float chamber baffles, or the air horn will not index correctly with the main body and can cause the floats to hang up. Be sure the leather on the plunger does not curl or wrinkle. Accelerator pump operation will be affected if this precaution is not observed. Place dashpot in position (if so equipped).**

(4) Install air horn attaching screws and tighten securely. (The two long screws should be installed in dash pot mounting bracket.)

The change from low speed, best fuel economy, road load mixtures to richer wide open throttle full power mixtures is now accomplished in two steps. This has made it possible to secure best low speed fuel economy without sacrificing performance in the intermediate speed range. To do this, there is a step-up piston, new metering rods with two diameters, and primary metering jets, (Fig. 11).

(5) Slide step-up piston spring into piston cylinders, followed by step-up pistons and step-up rods. Install cover plates and attaching screws while holding step-up pistons down in position. Tighten screws securely.

(6) Check fit of choke valve in air horn. The valve should be evenly spaced on all sides. Loosen screws and reposition if necessary.

(7) Engage throttle connector rod with primary throttle shaft lever, then install hairpin clip. Install hairpin clip to rod and pump arm.

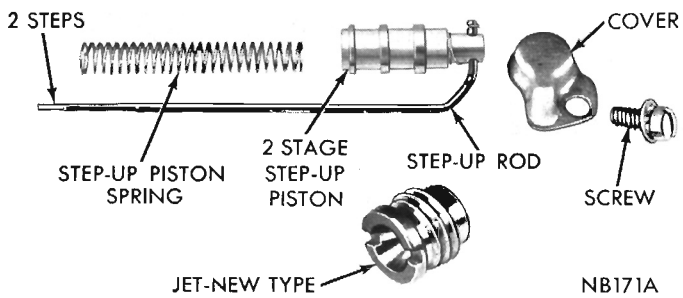

Fig. 11—Step-Up Piston Rod and Jet

(8) Engage lower end of fast idle connector rod with fast idle cam, then swing in an arc to lock in cam. Slide other end of rod into choke shaft lever and secure with hairpin clip.

Installing the Vacuum Diaphragm

Inspect the diaphragm vacuum fitting to be sure that the passage is not plugged with foreign material. Leak check the diaphragm to determine if it has internal leaks. To do this, first depress the diaphragm stem, then place a finger over the vacuum fitting to seal the opening. Release the diaphragm stem. If the stem moves more than 1/16 inch in ten (10) seconds, the leakge is excessive and the assembly must be replaced. Install the diaphragm assembly on the carburetor as follows:

(1) Assemble to carburetor and tighten attaching screws securely.

(2) Install choke operating link in position between diaphragm plunger (stem) and choke lever. Install clip to secure. Secure choke lever end with spring "E" clip.

(3) Inspect rubber hose for cracks, before placing it on correct carburetor fitting. (Fig. 1). **Do not connect the vacuum hose to the diaphragm fitting until after the vacuum kick adjustment has been made. (See Carburetor Adjustments.)**

(4) Loosen choke valve attaching screws slightly. Hold valve closed, with fingers pressing on high side of valve. Tap valve lightly with a screw driver to seat in air horn. Tighten attaching screws securely and stake by squeezing with pliers.

CARBURETOR ADJUSTMENTS

The following adjustments should be made with the carburetor on the bench for ease of working, and, should be made in the following order:

Fast Idle Speed Cam Position Adjustment

The fast idle engine speed adjustment should be made on the vehicle, as described in the Fast Idle Speed Adjustment (On Vehicle Paragraph.) However, the Fast Idle Cam Position Adjustment can be made on the bench.

This adjustment is important to assure that the speeds of each cam step occur at the proper time during engine warm-up. Adjust as follows:

(1) With fast idle speed adjusting screw contacting second highest speed step on fast idle cam, move choke valve toward closed position with light pressure on choke shaft lever.

(2) Insert specified drill (refer to Specifications), between choke valve and wall of airhorn (Fig. 12.) An adjustment will be necessary if a slight drag is not obtained as the drill is being removed.

(3) To adjust, bend fast idle connector rod at angle, using Tool T-109-213 until correct valve opening has been obtained. (Fig. 12.)

Vacuum Kick Adjustment—(This test can be made ON or OFF vehicle.)

The choke diaphragm adjustment controls the fuel delivery while the engine is running. It positions the choke valve within the airhorn by use of the linkage between the choke shaft and the diaphragm. The diaphragm must be energized to measure the vacuum kick adjustment. Use either a distributor test machine with a vacuum source, or vacuum supplied by the vehicle.

(1) If adjustment is to be made with engine running, disconnect fast idle linkage to allow choke to close to kick position with engine at curb idle. If an auxiliary vacuum source is to be used, open throttle valves (engine not running) and move choke valve to closed position. Release throttle first, then release choke.

(2) When using an auxiliary vacuum source, disconnect vacuum hose from carburetor and connect it to hose from vacuum supply with a small length of tube to act as a fitting. Removal of hose from diaphragm may require forces which damage the system. Apply a vacuum of 10 or more inches of Hg.

(3) Insert specified drill (refer to Specifications) between choke valve and wall of air horn. (Fig. 13). Apply sufficient closing pressure on **lever** to which choke rod attaches to provide a minimum choke valve opening without distortion of diaphragm link. Note that on most units, a cylinderical stem extends as an internal spring is compressed. This spring must be fully compressed for proper measurement of vacuum kick adjustment.

(4) An adjustment will be necessary if a slight drag is not obtained as drill is being removed. Shorten or lengthen diaphragm link to obtain correct choke opening. Length changes should be made by carefully opening or closing the bend provided in diaphragm link. **CAUTION: DO NOT APPLY TWISTING OR BENDING FORCE TO DIAPHRAGM.**

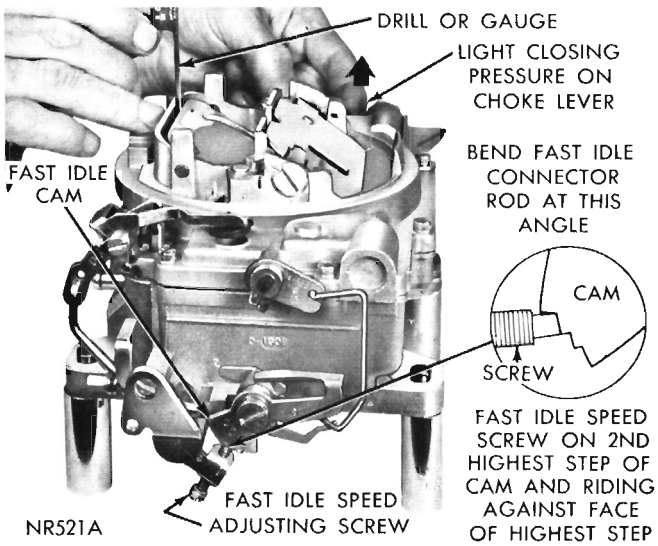

Fig. 12—Fast Idle Cam Position Adjustment

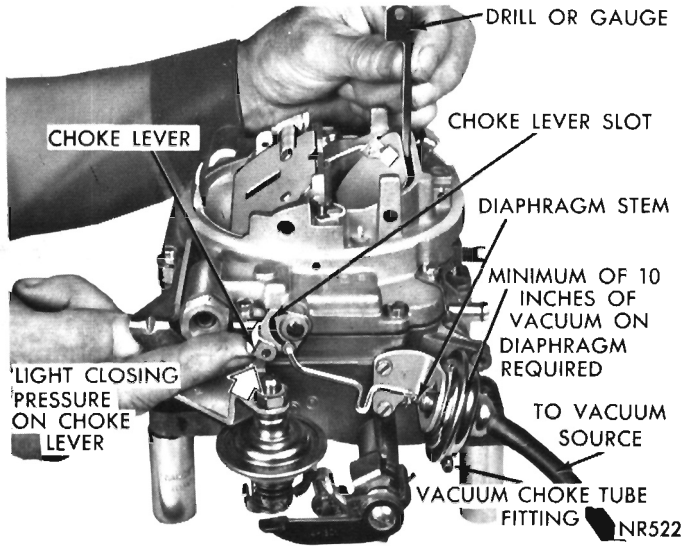

Fig. 13—Checking Choke Vacuum Kick Setting

(5) Reinstall vacuum hose on correct carburetor fitting. Return fast idle linkage to its original condition if disturbed as suggested in step no. 1.

(6) Make following check. With no vacuum applied to diaphragm. **CHOKE VALVE SHOULD MOVE FREELY** between open and closed positions. If movement is not free, examine linkage for misalignment or interferences caused by bending operation. Repeat adjustment if necessary to provide proper link operation.

Choke Unloader Adjustment

The choke unloader is a mechanical device to partially open the choke at wide open throttle. It is used to eliminate choke enrichment during cranking of an engine. Engines which have been flooded or stalled by excessive choke enrichment can be cleared by use of the unloader. Adjust the system as follows:

(1) Hold throttle valves in wide open position. Insert specified drill (refer to Specifications), between upper edge of choke valve and inner wall of air horn. (Fig. 14).

(2) With a finger lightly pressing against choke lever, a slight drag should be felt as drill is being withdrawn. If an adjustment is necessary, bend unloader tang on fast idle cam, using Tool T-109-22, until correct opening has been obtained. (Fig. 14).

Accelerator Pump Adjustment

Move the choke valve to wide open position, to release the fast idle cam. Back off the idle speed adjusting screw (curb idle) until the throttle valves are seated in the bores.

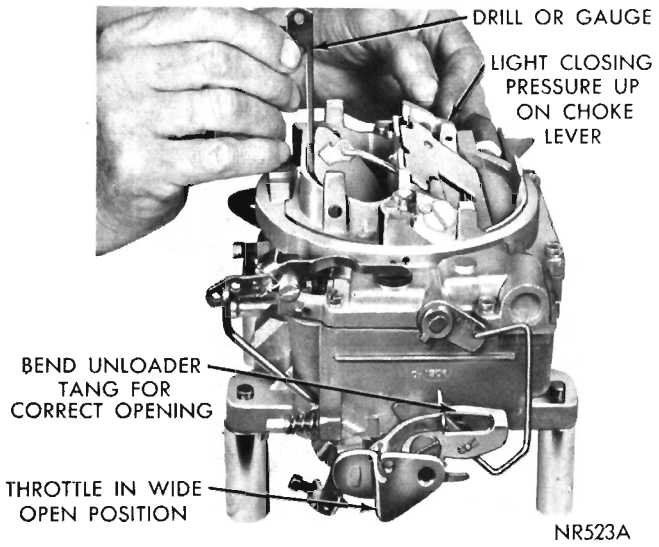

Fig. 14—Checking Choke Unloader (wide open kick)

Measure the distance from the top of the air horn to the top of the plunger shaft, using a "T" scale, (Fig. 15). This distance should be 7/16 inch.

If an adjustment is necessary, bend the throttle connector rod at the lower angle, using Tool T-109-213, until correct travel has been obtained.

Secondary Throttle Lever Adjustment

To check the secondary throttle lever adjustment, block the choke valve in the wide open position and invert the carburetor. Slowly open the primary throttle valves until it is possible to measure 21/64 inch between the lower edge of the primary valve and the bore (opposite idle port) (Fig. 16). At this measurement, the secondary valves should just start to open. If an adjustment is necessary, bend the secondary throttle operating rod at the angle, using Tool T-109-213, until correct adjustment has been obtained.

With primary and secondary throttle valves in tightly closed position, it should be possible to insert Tool T-109-29 (.020") wire gauge, between positive

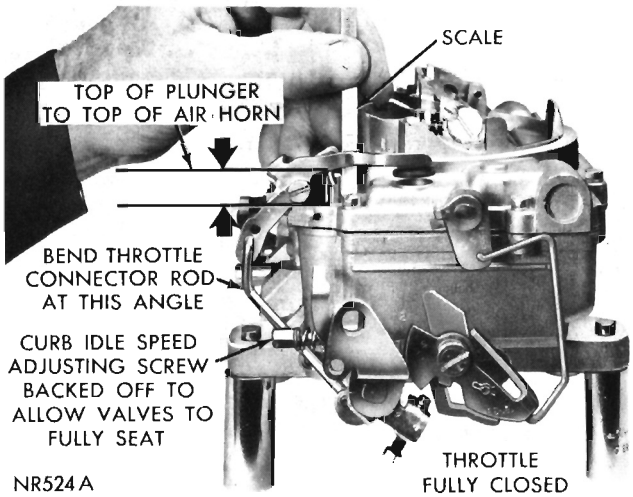

Fig. 15—Checking Accelerator Pump Adjustment

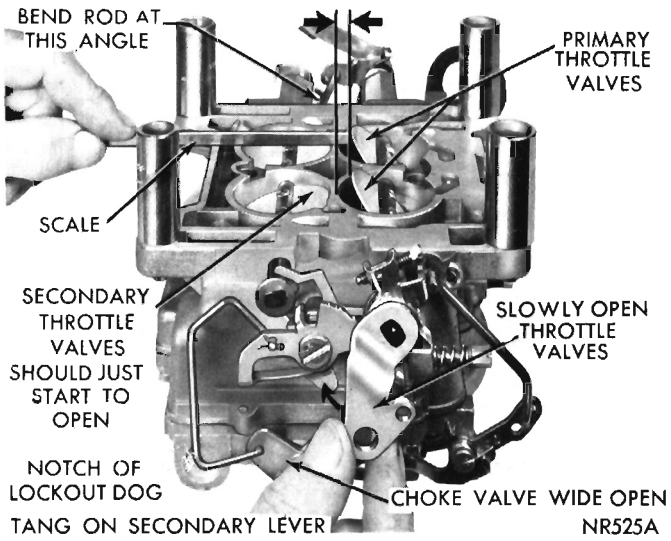

Fig. 16—Checking Secondary Throttle Adjustment

closing shoes on the secondary throttle levers, (Fig. 17).

If an adjustment is necessary, bend the shoe on the secondary throttle lever, using Tool T-109-22, until correct clearance has been obtained.

Secondary Throttle Lock Out Adjustment

Crack the throttle valves, then manually open and close the choke valve. The tang on the secondary throttle lever should freely engage in the notch of the lockout dog. (Fig. 16).

If an adjustment is necessary, bend the tang on the secondary throttle lever, until engagement has been made. Use Tool T-109-22 for this operation.

After adjustments have been made, reinstall carburetor on engine, using a new gasket.

It is suggested that the carburetor be filled with clean gasoline. This will help prevent dirt that is trapped in the fuel system, from being dislodged by

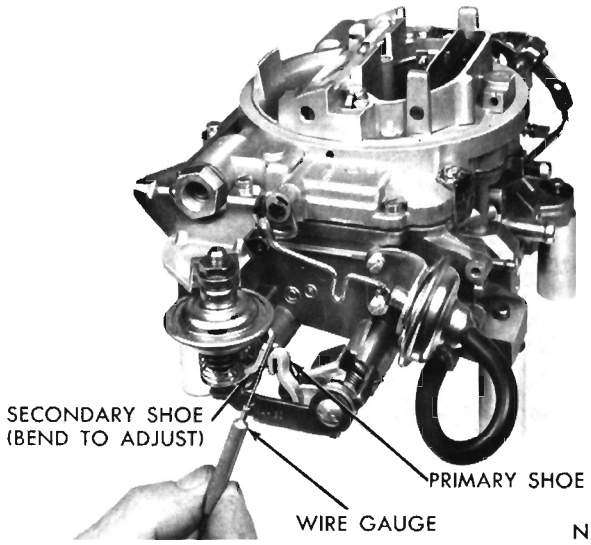

Fig. 17—Checking Clearance Between Closing Shoes

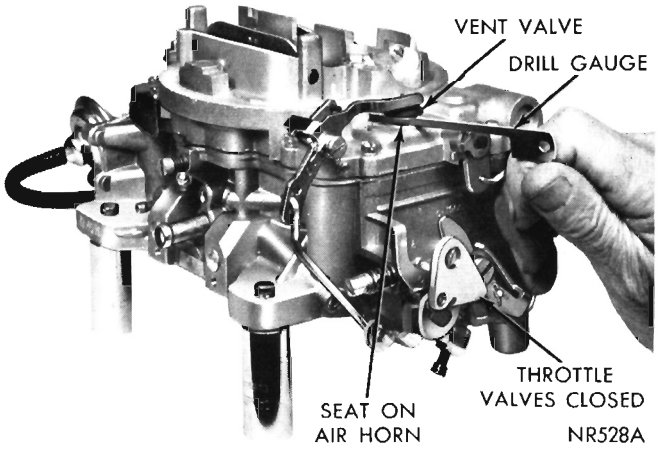

Fig. 18—Bowl Vent Valve Adjustment

the free flow of fuel, as the carburetor is primed.

Bowl Vent Valve Adjustment

To check the bowl vent valve adjustment, proceed as follows:

(1) With throttle valves tightly closed, insert a 1/8 inch drill between air horn and valve at smallest opening (Fig. 18).

(2) If an adjustment is necessary, bend adjusting tang (on pivot end of lever) until correct opening has been obtained.

Secondary Air Valve Adjustment

(1) Loosen lock screw (Fig. 19) and allow air valve to position itself at wide open position.

(2) From wide open position, (spring barely moving valve), turn slotted sleeve **two full turns** counter clockwise, (Fig. 19).

(3) Hold in this position with finger, then tighten lock screw securely. Check valve for freedom of movement.

Idle Speed Adjustment—(Curb Idle)

Refer to General Information at Front of Group.

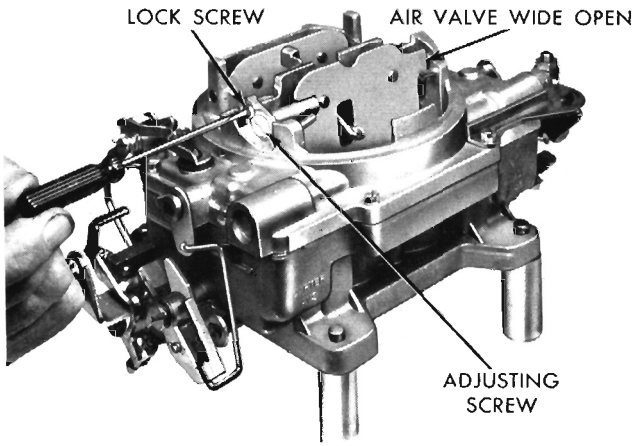

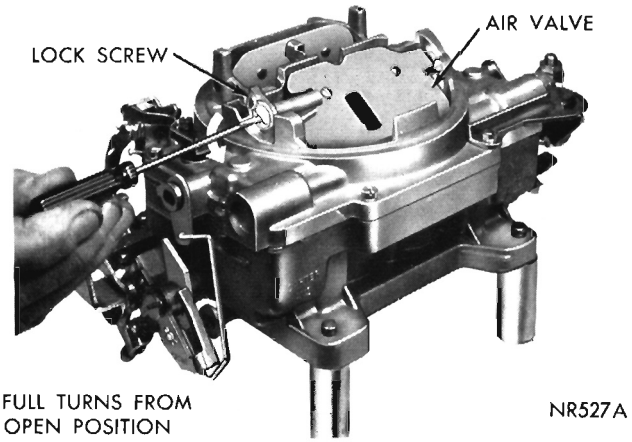

Fig. 19—Secondary Air Valve Adjustment

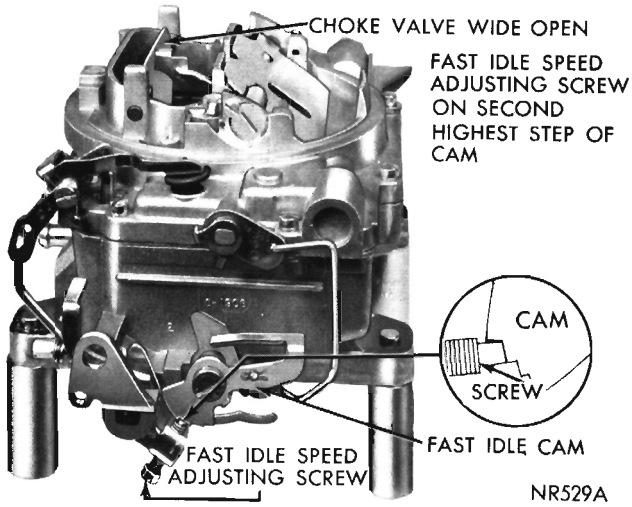

Fig. 20—Fast Idle Speed Adjustment (On Vehicle)

Fast Idle Speed Adjustment (On Vehicle)

Fast idle engine speed is used to overcome cold engine friction, stalls after cold starts and stalls because of carburetor icing. Set this adjustment after vehicle odometer indicates over 500 miles to insure a normal engine friction level. Prepare engine by driving at least 5 miles. Connect a tachometer and set curb idle speed and mixture, then proceed as follows:

(1) With engine off and transmission in **PARK** or **NEUTRAL** position open throttle slightly.

(2) Close choke valve until fast idle screw can be positioned on the second highest speed step of fast idle cam. (Fig. 20).

(3) Start engine and determine stabilized speed. Turn fast idle speed screw **in** or **out** to secure specified speed. (Refer to Specifications).

(4) Stopping engine between adjustments is not necessary. However, reposition fast idle speed screw on came after each speed adjustment to provide correct throttle closing torque.

Before adjusting idle and/or fast idle speeds and mixtures, make sure that the basic timing and the distributor control valve are correctly adjusted as

outlined under Idle Speed Adjustment (Curb Idle).

Dashpot Setting and Adjustment— (Manual Transmission Only)

With the curb idle speed and mixture properly set and a tachometer installed, position the throttle lever so that the actuating tab on the lever is contacting the stem of the dashpot but not depressing it. The tachometer should read 2000 rpm if the setting is correct. To adjust the setting if necessary, screw the dashpot in or out as required. When the desired setting is obtained, tighten the lock nut on the dashpot against the bracket.

To set the idle speed on vehicles, refer to the Fuel System General Information Paragraph.

AFB SERIES CARTER CARBURETOR

INDEX

	Page
Automatic Choke (well type)	2
Carburetor Adjustments	50
Accelerator Pump	51
Bowl Vent Valve	52
Choke Piston Index	50
Choke Unloader (Wide Open Kick)	51
Fast Idle Speed Cam Position	50
Fast Idle Speed (On Vehicle)	52
Idle Speed	52
Secondary Throttle Lever	51
Secondary Throttle Lockout	52
Cleaning Carburetor Parts	1
Closed Crankcase Vent System (Group 9—Engine)	
Disassembling Carburetor	45
General Information	44
Inspection and Reassembly	47
Specifications	87

GENERAL INFORMATION

The twin four barrel carburetors (Fig. 1) are used on the 426 cu. in. Hemi engine. Carburetor Models AFB-4619S (front) are used on the 426 cu. in. engine (Street Hemi), when the vehicles are equipped with the manual or automatic transmissions.

Carburetor Models AFB-4620S (rear) and AFB-4621S (rear) are used on the 426 cu. in. engine (Street Hemi), when the vehicles are equipped with the manual or automatic transmissions respectively.

Since the service procedures are identical on all Carter AFB carburetors, the illustrations showing the various disassembly procedures will not always show any one specific carburetor.

The throttle valves of the secondary half of the carburetor are mechanically connected to the primary valves and open with the primary after an approximate 60° lag; and continue to open until both primary and secondary throttle valves reach the wide open position simultaneously. As engine speed increases, the forces exerted by the velocity of intake air down through the venturis of the carburetor increases and tends to overcome the counterweight attached to the velocity shaft, permitting the offset velocity valves to position themselves according to engine requirements.

The AFB (aluminum four barrel) carburetor contains many features, some of which are the locations for the step-up rods and pistons. The step-up rods, pistons and springs are accessible for service without removing the air horn or the carburetor from the engine. The venturi assemblies (primary and secondary) are replaceable and contain many of the calibra-

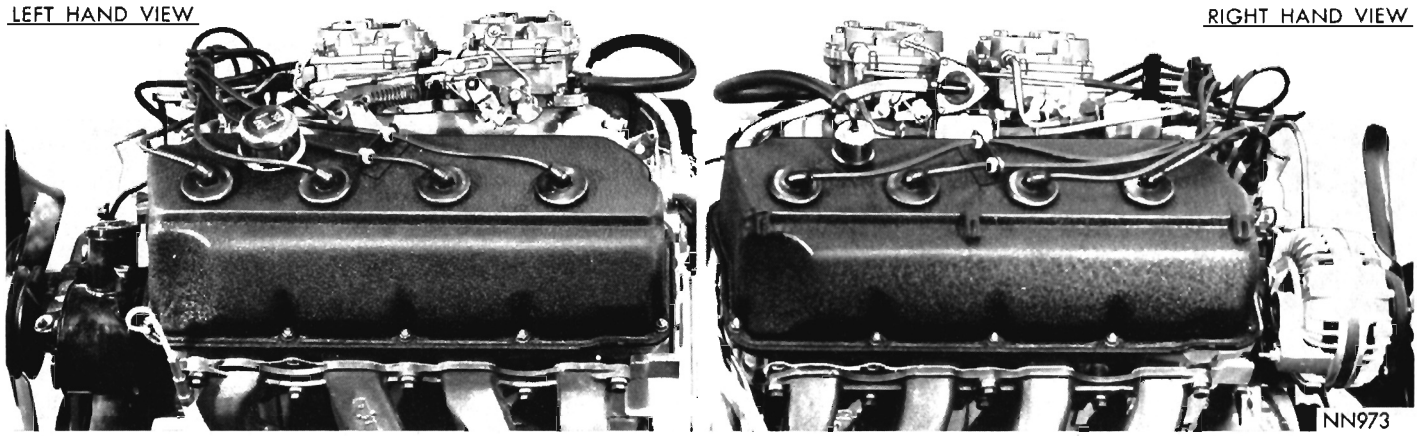

Fig. 1—Twin Four Barrel Carburetor Assemblies

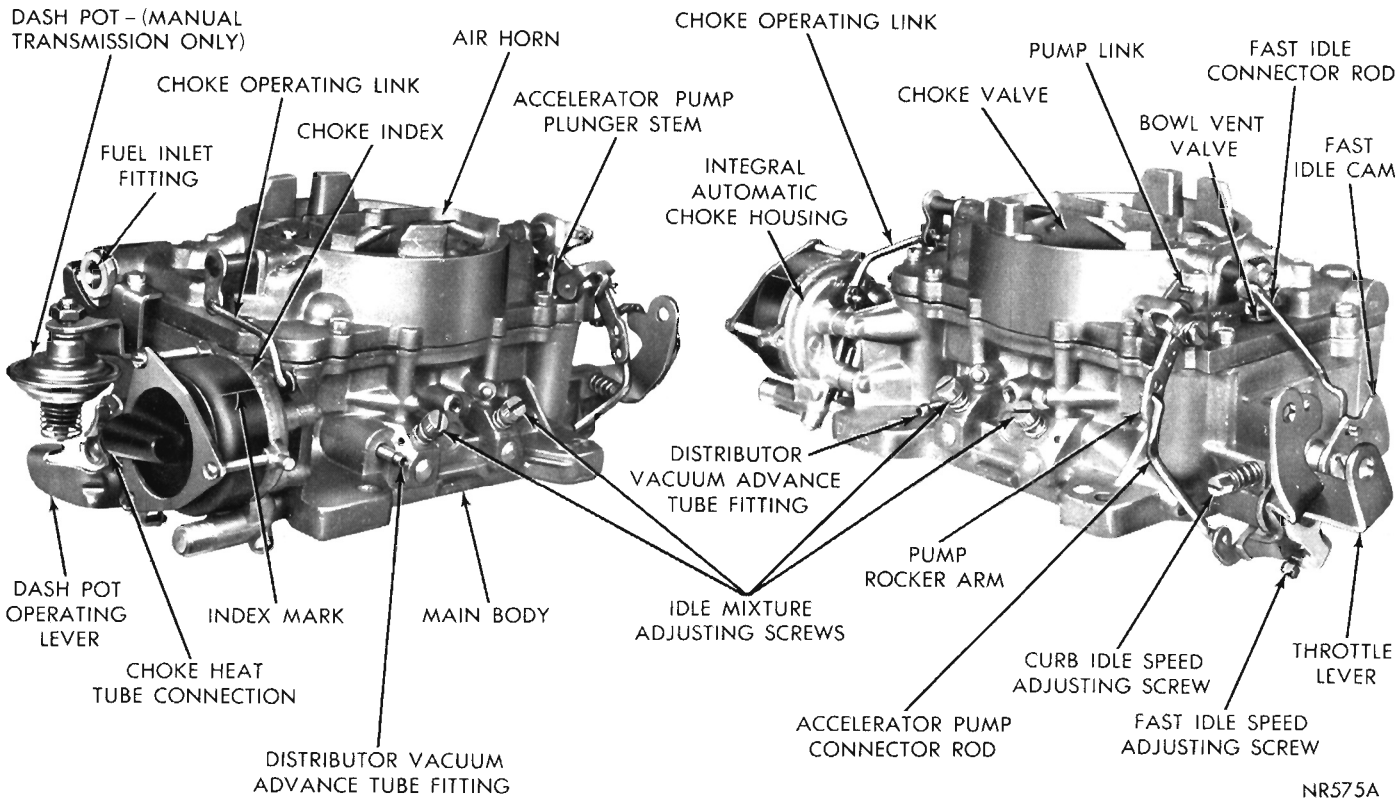

Fig. 1—Carburetor Assembly (AFB)

tion points for both the high and low speed system. One fuel bowl feeds both the primary and secondary nozzles on the right side while the other fuel bowl takes care of the primary and secondary nozzles on the left side. This provides improved performance in cornering, quick stops and acceleration.

All the major castings of the carburetor are aluminum, with the throttle body cast integral with the main body. This allows an overall height reduction in the carburetor. The section containing the accelerator pump is termed the primary side of the carburetor. The rear section is the secondary. The five conventional systems used in previous four barrel carburetors are also used in this unit. The five conventional systems are, two float systems, two low speed systems, (primary side only on front carburetors only) two high speed systems, one accelerator pump system and one automatic choke control system.

The carburetors are equipped with a pair of velocity valves, which control the secondary valve operation.

SERVICE PROCEDURES

DISASSEMBLING CARBURETOR (Fig. 1)

(1) Place carburetor assembly on repair stand Tool C-3400 or T-109-287S elevating legs. These tools are used to protect throttle valves from damage and to provide a suitable base for working.

(2) Remove hairpin clip that attaches fast idle connector rod to choke lever. Disengage rod from lever, then swing rod at an arc until it can be disengaged from fast idle cam.

(3) Remove retainer that holds throttle connector rod in center hole of accelerator pump arm. Remove hairpin clip that attaches lower end of rod in primary throttle shaft lever. Disengage rod from arm and lever, then remove from carburetor.

(4) Remove screws attaching step-up piston and rod cover plates. Hold cover down with a finger to prevent piston and rods from flying out. Lift off plates and slide step-up pistons and rods out of air horn, (Fig. 2). Remove step-up piston springs. Step-up rods are not interchangeable.

(5) Remove ten screws that attach air horn to main body. (1 screw in hole in air horn.) Lift air horn straight up and away from main body. When removing air horn, use care so as not to bend or damage floats. Remove accelerator pump, plunger, lower

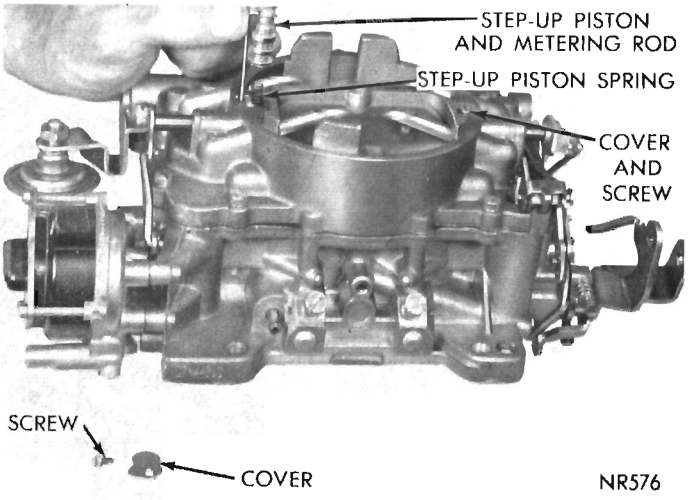

Fig. 2—Removing or Installing Step-Up Piston and Rods

spring from pump cylinder. Remove dashpot (if so equipped).

Disassembling the Air Horn

Place air horn in an inverted position on bench (to protect the floats) then proceed to disassemble as follows:

(1) Using a suitable Tool, remove float fulcrum pins, (left and right) then lift float up and out of bosses on air horn. It is suggested that the float on the pump side be marked so that floats can be reinstalled in their respective positions.

(2) Remove two needle valves from their respective seats, after marking one on pump side for identification. Using a wide blade screw driver, remove needle valve seats. Be sure each needle valve is returned to its original seat at reassembly.

(3) Remove spring clip that holds throttle connector rod in center hole of pump arm. Remove pump arm pivot screw and lift off pump arm, at same time, disengage link from arm and pump stem. Slide accelerator pump plunger and spring out of air horn. Remove gasket.

(4) Place accelerator pump plunger in a jar of clean gasoline or kerosene, to prevent leather from drying out.

(5) Remove fuel inlet fitting and filter screen from air horn.

(6) Remove screws and retainer holding thermostatic coil housing to choke housing. Remove housing, gasket and baffle plate. To remove choke piston, remove nut and washer, then slide piston off shaft and work out of well.

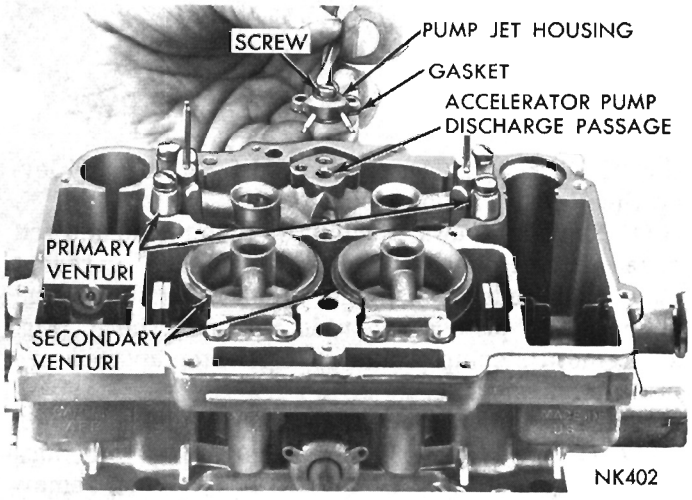

Fig. 3—Removing or Installing Accelerator Pump Jet Housing

Main Body Disassembly

(1) Remove screws that attach accelerator pump jet housing to main body. Lift out jet housing and gasket (Fig. 3). Discard gasket. Now, invert main body and drop out discharge check needle from discharge passage.

(2) Using Tool T-109-58, remove main metering jets (primary side), (Fig. 4). **The primary and secondary main metering jets are not interchangeable. It is very important that these jets be installed in their respective locations in the main body at reassembly.**

(3) Again using Tool T-109-58, remove main metering jets (secondary side), (Fig. 4).

(4) Remove screws that attach primary venturi (choke and pump side) to main body. Lift venturi straight up and away from main body, (Fig. 5). Discard gaskets. **The venturi assemblies are not interchangeable, side for side and must be reinstalled in their original locations at reassembly.**

(5) Remove screws that attach secondary venturi (choke and pump side) to main body. Lift secondary venturi assemblies straight up and away from body, (Fig. 6). Remove velocity valves (Fig. 7).

(6) Using Tool T-109-59, screw driver bit, remove accelerator pump intake check valve located inside

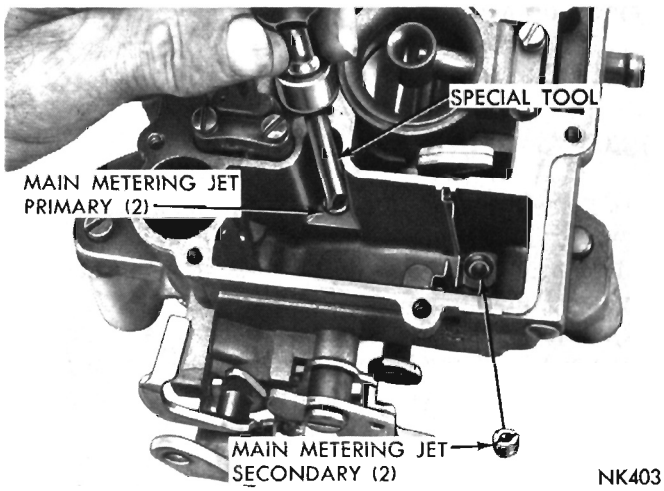

Fig. 4—Removing or Installing Main Metering Jets

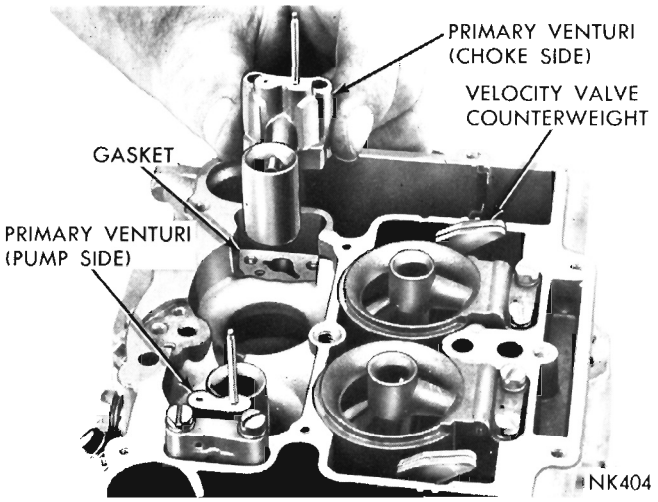

Fig. 5—Removing or Installing Primary Venturi Cluster

fuel bowl, adjacent to accelerator pump cylinder.

The carburetor now has been disassembled into two units, namely air horn and the main and throttle body casting. The component parts of each have been disassembled as far as necessary for cleaning and inspection.

It is usually not advisable to remove the throttle shafts or valves unless wear or damage necessitates the installation of new parts. During the manufacture of the carburetor, the location of the idle transfer ports and the idle discharge ports to the valve is carefully established for one particular assembly, (Fig. 8).

If new throttle shafts should be installed in an old worn body, it would be very unlikely that the original relationship of these ports to the valves would be obtained. A very slight change in the port relationship to the valves would adversely affect normal carburetor operation, between the speeds of 15 and 30 miles per hour.

It is recommended that if the throttle shafts are excessively worn, that a new carburetor be installed. However, if the throttle valves have become nicked,

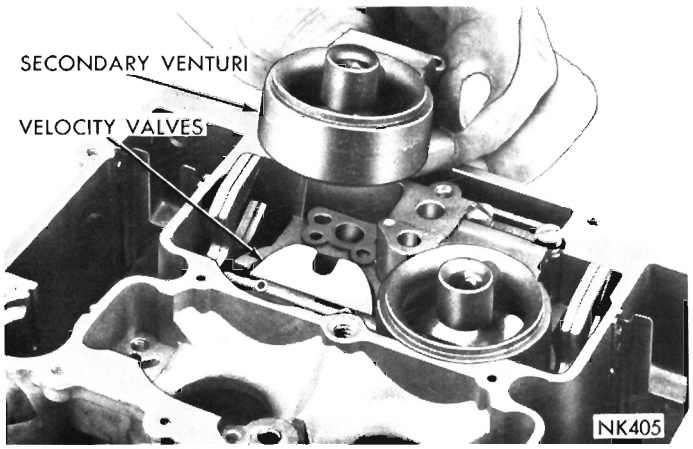

Fig. 6—Removing or Installing Secondary Venturi Cluster

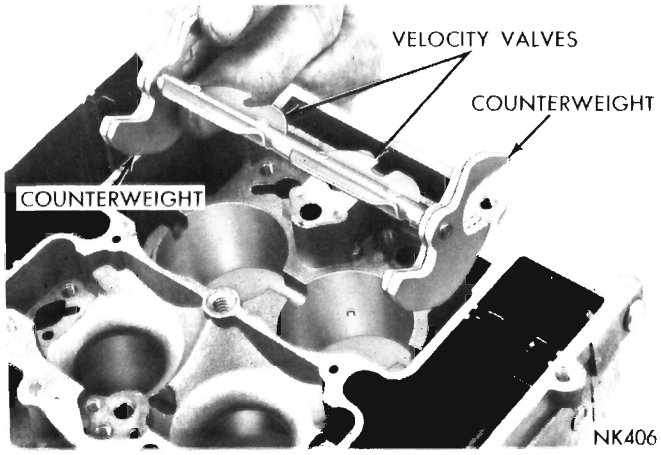

Fig. 7—Removing or Installing Velocity Valves

burred or damaged, new valves may be installed, providing the following instructions are carefully followed. **The screws that attach the throttle valves are staked on the opposite side and care should be used in removal so as not to break the screws in the throttle shaft. Remove the staked portion of the screws with a file.**

Remove the screws that attach the primary throttle valves to the throttle shaft and slide valve (or valves) out of bores.

Remove the screws that attach the secondary throttle valves to the throttle shaft and slide valve (or valves) out of bores.

The primary valves and secondary valves are not interchangeable and should be kept separate in order that each may be returned to its respective bore. (Fig. 9).

INSPECTION AND REASSEMBLY

(1) Slide primary throttle valve (or valves) into their respective bores, install new screws, but do not tighten. Be sure idle speed adjusting screw is backed

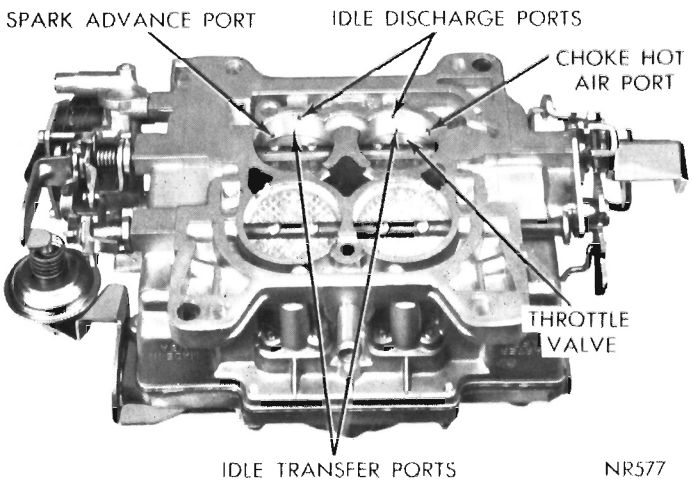

Fig. 8—Ports in Relation to Throttle Valves

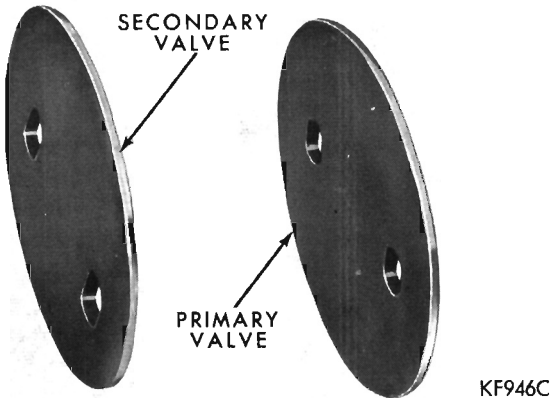

Fig. 9—Throttle Valve Identification

out. Hold valves in place with fingers. (Fingers pressing on high side of valves.)

(2) Tap valves lightly in this position, tighten screws securely. Stake screws by squeezing with pliers.

(3) Turn idle mixture adjusting screws lightly against their seats, then back off one full turn for an approximate adjustment. **Do not use a screwdriver.** Install velocity valves.

(4) Place new secondary venturi gaskets in position, then install secondary venturi (pump and choke side) by lowering straight down on gaskets. Install attaching screws and tighten securely. **Be sure all the metering holes and vent tubes are clean, in both the primary and secondary venturi.**

(5) Place new primary venturi gaskets in position, then install the primary venturi (pump and choke side) by lowering straight down on gaskets. (Fig. 5). Install attaching screws and tighten securely.

(6) Install primary and secondary main metering jets, using Tool T-109-58. (Fig. 4). Tighten jets securely.

(7) Install accelerator pump intake check ball using Tool T-109-59.

Accelerator Pump Test

(1) Pour clean gasoline into carburetor bowl (approximately 1/2 inch deep). Remove accelerator pump plunger from jar of gasoline. Flex leather several times, then slide into pump cylinder.

(2) Install accelerator pump discharge check needle in discharge passage. Raise pump plunger and press lightly on plunger shaft to expel air from pump passages. Using a small clean brass rod, hold discharge check needle firmly on its seat. Again raise plunger and press downward. No fuel should be emitted from either the intake or discharge passage.

(3) If fuel does emit from intake passage, remove intake check ball and reclean the passage. Fuel leakage at discharge check needle indicates presence of dirt or a damaged check needle. Clean again and then install a new check needle. Retest for leakage.

(4) If either intake check assembly or discharge check needle leaks after above test and service fix, attempt to reseat as follows:

Intake Check Ball

Remove the intake check assembly from the throttle body. Install a new check assembly, then retest as described previously.

Discharge Check Needle

(1) With discharge check needle installed, insert a piece of drill rod down on needle. Lightly tap drill rod with a hammer to form a new seat. Remove and discard old needle and install a new one. Retest as described previously. If service fix does not correct the condition, a new carburetor will have to be installed.

(2) Install accelerator pump discharge check needle, jet housing and gasket. Install housing and attaching screws. Tighten screws securely.

(3) Press down on accelerator pump plunger shaft, and as plunger is being depressed, a clear straight stream should emit from each jet. If streams are not identical, (if either one is diverted or restricted) a new accelerator pump jet housing should be installed. After test, pour gasoline from carburetor bowl and remove pump plunger.

Assembling Air Horn

(1) Slide fuel inlet screen into fuel line fitting, then install in air horn. Tighten securely.

(2) Check to see if leather on accelerator pump plunger is hard, cracked or worn. If any sign of wear or deterioration is evident, install a new plunger assembly.

(3) Slide the accelerator plunger into air horn, then install the accelerator pump link. When reassembling, make sure the large diameter of pivot screw enters hole in pump arm and that shoulder on screw has not pinched pump arm.

The carburetors are equipped with synthetic rubber tipped fuel inlet needles. The needle tip is a rubber material which is not affected by gasoline and is stable over a wide range of temperatures. The tip is flexible enough to make a good seal on the needle seat, and to give increased resistance to flooding.

The use of new inlet needles require that care be used when making float adjustments. Avoid applying any pressure on the floats which might compress the tip of the fuel inlet needles. **The tip can be compressed sufficiently to cause a false setting which will affect correct level of fuel in the bowl.**

(4) Place a new air horn to main body gasket in position on air horn, then install float needle valve seats. (Be sure each needle seat and needle is reinstalled in its original position.)

(5) Slide right and left floats into position in air

horn, then install float fulcrum pins. **(Be sure marked float is installed on pump side of the air horn.) See disassembly procedures.**

(6) After floats have been installed, check float alignment, level and drop settings as follows:

Float Alignment Setting

(1) Sight down side of each float shell to determine if side of the float is parallel to outer cage of air horn casting, (Fig. 10).

(2) If sides of float are not in alignment with edge of casting, bend float lever by applying pressure to end of float shell with thumb. **To avoid damage to the float, apply only enough pressure to bend the float lever.**

(3) After aligning floats, remove as much clearance as possible between arms of float lever and lugs of air horn. To do this, bend float lever. The arms of float lever should be as parallel as possible to inner surfaces of lugs of casting.

Float Level Setting

(1) With air horn inverted, air horn gasket in place and float needle seated, slide float gauge (refer to specifications for carburetor being worked on) between top of the float (at outer end) and air horn gasket, (Fig. 11). Float should just touch gauge (T-109-106).

(2) Check other float in same manner. If an adjustment is necessary, bend float arm using Tool T-109-22, until correct clearance has been obtained. After bending arm, recheck the float alignment.

Float Drop Setting

(1) Holding air horn in an upright position, measure distance from the top of floats (outer end) to the air horn gasket, (Fig. 12). This measurement should be 3/4 inch. If an adjustment is necessary, bend stop tabs on float levers until correct drop setting has

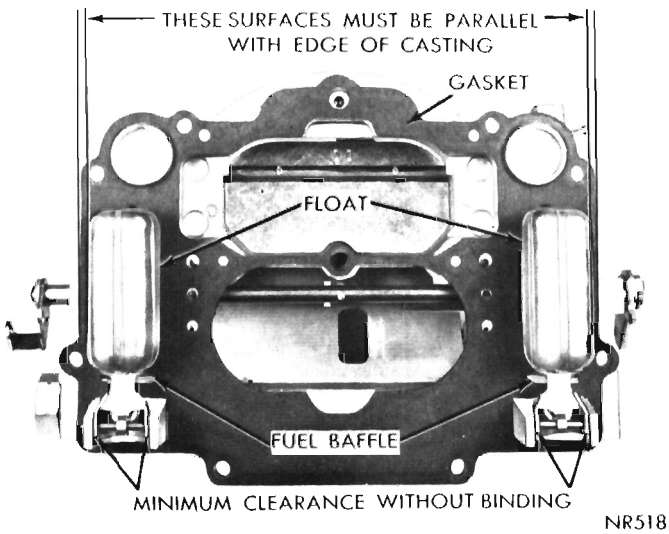

Fig. 10—Checking Float Alignment

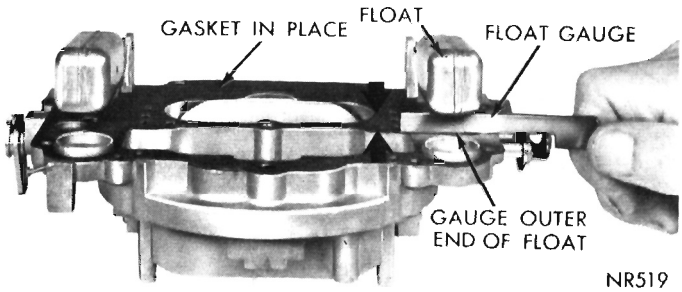

Fig. 11—Checking Float Height

been obtained. Bend tab toward needle seat to lessen drop, or away from seat to increase drop.

(2) After floats have been checked and adjusted, continue to assemble carburetor as follows:

(3) Place accelerator pump plunger lower spring in pump cylinder, then lower air horn carefully down on main body. Care must be taken to center small brass main bleed tubes so that they will pass through holes in air horn without being damaged. **Be sure the fuel baffles on the air horn, slide down in front, (bowl side) of the float chamber baffles, or the air horn will not index correctly with the main body and can cause the floats to hang up. Be sure the leather on the plunger does not curl or wrinkle. Accelerator pump operation will be affected if this precaution is not observed. Install dashpot (if so equipped.)**

(4) Install 10 air horn attaching screws and tighten securely. (The two long screws should be installed in holes that are located at air cleaner mounting surface. The 1 inch screw at front and 1-1/2 inch at rear.)

The change from low speed, best fuel economy, road load mixtures to richer wide open throttle full power mixtures is now accomplished in two steps. This has made it possible to secure best low speed fuel economy without sacrificing performance in the intermediate speed range. To do this, there is a new step-up piston and spring assembly, new metering rods with three diameters, and new style primary metering jets, (Fig. 13).

(5) Slide step-up piston spring into piston cylinders,

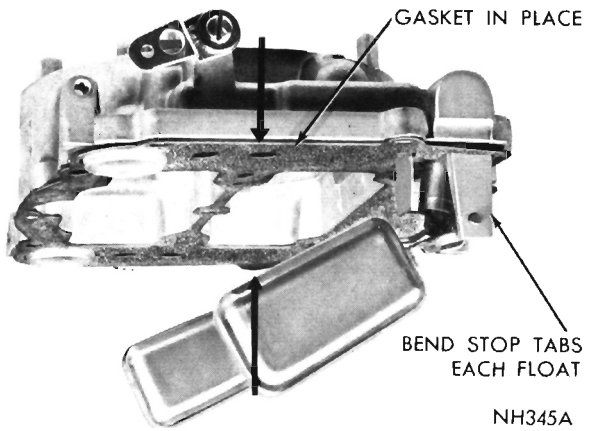

Fig. 12—Checking Float Drop

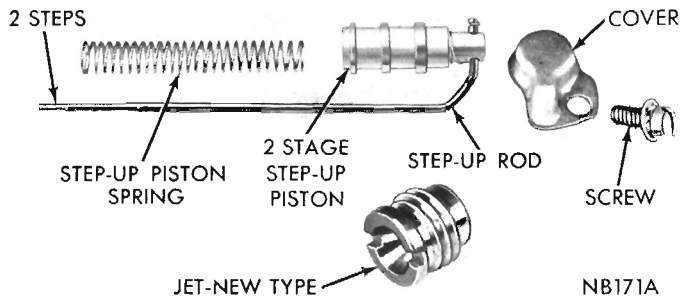

Fig. 13—Step-Up Piston, Rod and Jet

followed by step-up pistons and step-up rods. Install cover plates and attaching screws while holding step-up pistons down in position. Tighten screws securely.

(6) Slide choke piston down into well. Slide piston arm over shaft and install nut and washer. Tighten securely. Install baffle plate, gasket and coil housing. Install retainer and attaching screws. Turn coil housing to align index marks at two notches rich.

(7) Engage throttle connector rod with primary throttle shaft lever, then install hairpin clip. Install clevis clip to rod and pump arm.

(8) Engage lower end of fast idle connector rod with fast idle cam, then swing in an arc to lock in cam. Slide other end of rod into choke shaft lever and secure with hairpin clip.

CARBURETOR ADJUSTMENTS AFB-4620S and AFB-4621S Carburetors Only

The following adjustments should be made with the carburetor on the bench for ease of working, and, should be made in the following order:

Fast Idle Speed Cam Position Adjustment

The fast idle engine speed adjustment should be made on the vehicle, as described in the Fast Idle Speed Adjustment (On the Vehicle Paragraph.) However, the Fast Idle Cam Position Adjustment can be made on the bench.

This adjustment is important to assure that the speeds of each cam step occur at the proper time during engine warm-up. Adjust as follows:

(1) With fast idle speed adjusting screw contacting second highest speed step on fast idle cam, move choke valve toward closed position with light pressure on choke shaft lever.

(2) Insert specified drill (refer to Specifications), between choke valve and wall of air horn (Fig. 14). An adjustment will be necessary if a slight drag is not obtained as the drill is being removed.

(3) To adjust, bend fast idle connector rod at angle, using Tool T-109-213 until correct valve opening has been obtained (Fig. 14).

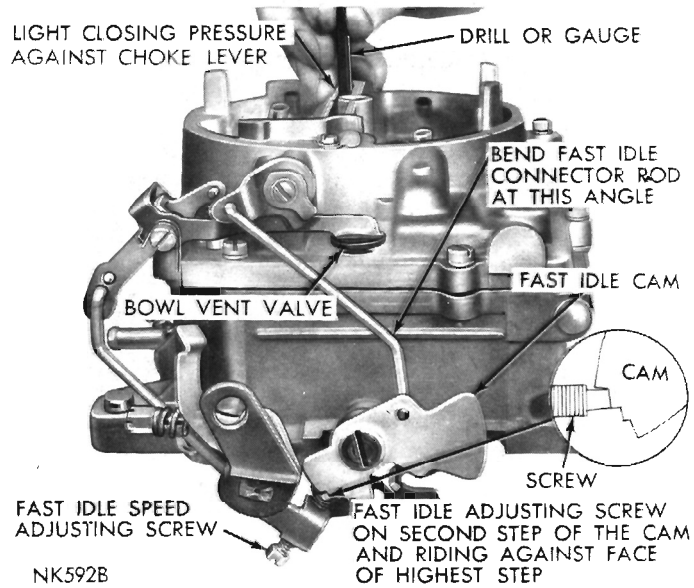

Fig. 14—Fast Idle Cam Position Adjustment

CHOKE PISTON INDEX (AFB-4620S and AFB-4621S Rear Carburetors Only)

The choke piston should be indexed to provide proper fuel delivery during warm-up, proceed as follows:

(1) Remove choke housing retainer ring, heat tube cap and choke coil housing, baffle plate and gasket.

(2) Remove throttle return spring so throttle can be set to a mid position.

(3) Let choke blade go wide open.

(4) Insert an .026 inch wire gauge* into choke piston slot so that hook on the end goes into slot in cylinder (Fig. 15).

(5) Push on choke piston lever thermostat tang

*This gauge can be made by bending a piece of .026 x 2 (inches long) wire bent at a right angle (1/8″) as shown. If this size wire is not readily available, .026 inch step-up wire used in BBD Carburetors can be bent to shape and used for this purpose.

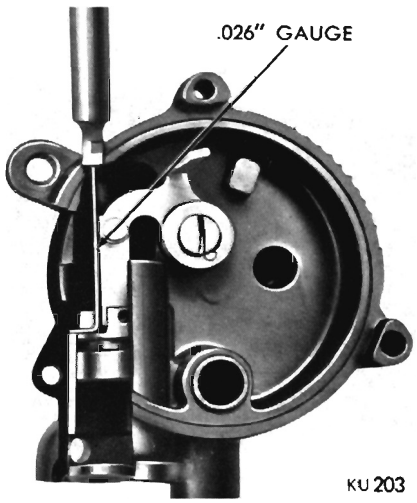

Fig. 15—Choke Piston Indexing

trapping the wire gauge between piston and cylinder slots with linkage hanging free.

(6) Adjust the link connecting the choke shaft to the choke piston lever by bending the link at an angle to give correct opening between choke valve and wall of air horn. (Refer to Specifications). Remove wire gauge before bending link.

(7) Reassemble choke, setting the coil two notches rich and install the throttle return spring.

Choke Unloader Adjustment (Wide Open Kick)

The choke unloader is a mechanical device to partially open the choke at wide open throttle. It is used to eliminate choke enrichment during cranking of an engine. Engines which have been flooded or stalled by excessive choke enrichment can be cleared by use of the unloader. Adjust the system as follows:

(1) Hold throttle valves in wide open position. Insert specified drill (refer to Specifications), between upper edge of choke valve and inner wall of air horn (Fig. 16).

(2) With a finger lightly pressing against choke valve lever, a slight drag should be felt as drill is being withdrawn. If an adjustment is necessary, bend unloader tang on throttle shaft lever, using Tool T-109-41, until correct opening has been obtained (Fig. 16).

Accelerator Pump Adjustment

Move the choke valve to wide open position, to release the fast idle cam. Back off the idle speed adjustment screw (curb idle) until the throttle valves are seated in the bores.

Measure the distance from the top of the air horn to the top of the plunger shaft, using a "T" scale,

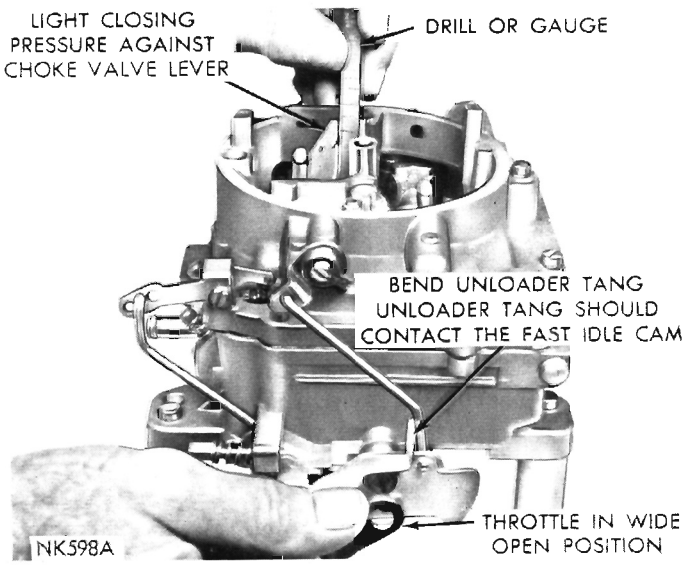

Fig. 16—Checking Choke Unloader (wide open kick)

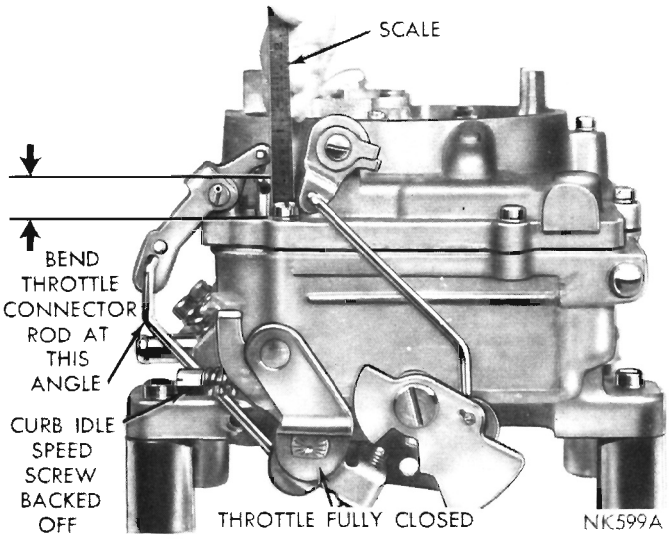

Fig. 17—Checking Accelerator Pump Adjustment

(Fig. 17). This distance should be 7/16 inch.

If an adjustment is necessary, bend the throttle connector rod at the lower angle, using Tool T-109-213, until correct travel has been obtained.

Secondary Throttle Lever Adjustment

To check the secondary throttle lever adjustment, block the choke valve in the wide open position and invert the carburetor. Slowly open the primary throttle valves until it is possible to measure 17/64 inch between the lower edge of the primary valve and the bore (opposite idle port) (Fig. 18). At this measurement, the secondary valves should just start to open. If an adjustment is necessary, bend the secondary throttle operating rod at the angle, using Tool T-109-213, until correct adjustment has been obtained.

With primary and secondary throttle valves in tightly closed position, it should be possible to insert

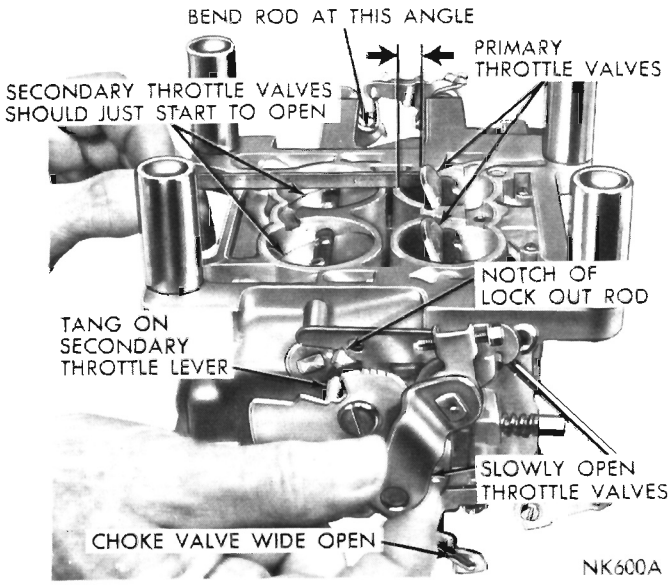

Fig. 18—Checking Secondary Throttle Adjustment

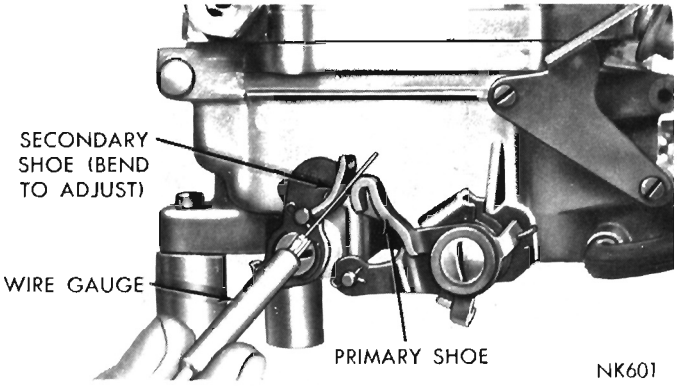

Fig. 19—Checking Clearance Between Closing Shoes

Tool T-109-29 (.020") wire gauge, between positive closing shoes on the secondary throttle levers, (Fig. 19).

If an adjustment is necessary, bend the shoe on the secondary throttle lever, using Tool T-109-22, until correct clearance has been obtained.

Secondary Throttle Lock Out Adjustment

Crack the throttle valves, then manually open and close the choke valve. The tang on the secondary throttle lever should freely engage in the notch of the lockout dog (Fig. 18).

If an adjustment is necessary, bend the tang on the secondary throttle lever, until engagement has been made. Use Tool T-109-22 for this operation.

After adjustments have been made, reinstall carburetor on engine, using a new gasket.

It is suggested that the carburetor be filled with clean gasoline. This will help prevent dirt that is trapped in the fuel system, from being dislodged by the free flow of fuel, as the carburetor is primed.

Bowl Vent Valve Adjustment (If so Equipped)

To check the bowl vent valve adjustment, proceed as follows:

(1) With throttle valves tightly closed, insert a 5/32 ± 1/64 inch drill between air horn and valve at smallest opening.

(2) If an adjustment is necessary, bend adjusting tang (on pivot end of lever) until correct opening has been obtained.

Fast Idle Speed Adjustment (On Vehicle)

Fast idle engine speed is used to overcome cold engine friction, stalls after cold starts and stalls because of carburetor icing. Set this adjustment after vehicle odometer indicates over 500 miles to insure a normal engine friction level. Prepare engine by driving at least 5 miles. Connect a tachometer and set curb idle speed and mixture, then proceed as follows:

(1) With engine off and transmission in **PARK** or **NEUTRAL** position open throttle slightly.

(2) Close choke valve until fast idle screw can be positioned on the second highest speed step of fast idle cam (Fig. 20).

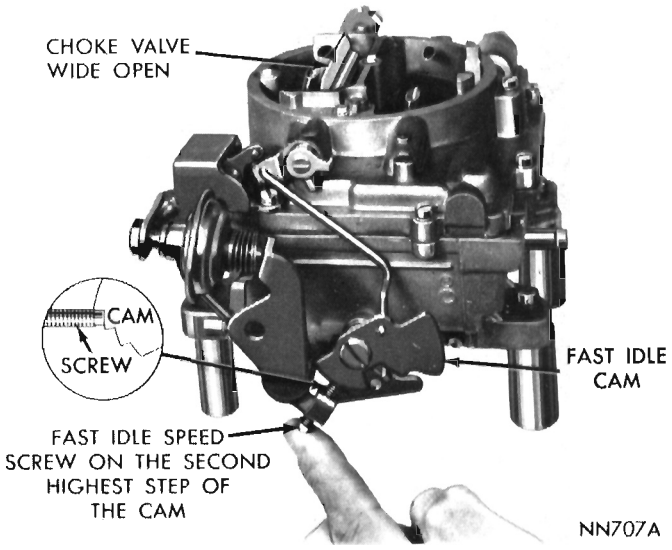

Fig. 20—Fast Idle Speed Adjustment (On Vehicle)

(3) Start engine and determine stabilized speed. Turn fast idle speed screw **in** or **out** to secure specified speed. (Refer to Specifications).

(4) Stopping engine between adjustments is not necessary. However, reposition fast idle speed screw on cam after each speed adjustment to provide correct throttle closing torque.

Before adjusting idle and/or fast idle speeds and mixtures, make sure that the basic timing and the distributor control valve are correctly adjusted as outlined under Idle Speed Adjustment (Curb Idle).

Idle Speed and Mixture Adjustment— AFB-4620S and AFB-4621S Rear Carburetors AFB-4619S Front Carburetor

Connect a tachometer and warm-up the engine to normal operating temperature. Be sure the choke is fully off and that the engine is at curb idle, (transmission in Neutral). Proceed as follows:

(1) Turn the idle mixture screws from 1 to 2 turns open.

(2) Set the idle screws 2 turns open and adjust the idle speed to 750 rpm. (Manual or Automatic Transmissions).

Adjust the idle mixture screws on each carburetor for maximum rpm. Repeat on each carburetor.

Before attaching the rod at each carburetor, check the transmission to throttle linkage adjustments, so that the idle position is not disturbed.

Accurate carburetor synchronization or balance is extremely important and when performed should be rechecked and rebalanced in the outside ambient temperature after a five mile or more road test. This readjustment will prevent rough engine idle performance and possible engine stalling when the vehicle is returned to the owner.

HOLLEY 4160 SERIES CARBURETOR

INDEX

	Page
Automatic Choke-Well Type	2
Carburetor Adjustments	
Adjusting the Floats	64
Checking Bowl Vent Valve Clearance	66
Checking Pump Lever Clearance	66
Checking Wet Fuel Level	69
Choke Unloader (Wide Open Kick)	67
Fast Idle Cam Position	68
Fast Idle Speed (On or Off Vehicle)	67
Idle Mixture	67
Idle Speed (Curb Idle)	69
Secondary Throttle	69
Vacuum Kick (On or Off Vehicle)	68
Disassembling the Carburetor	59
Cleaning Carburetor Parts	63
General Information	53
Inspection and Reassembly	63
Servicing Carburetor	59
Specifications	88

GENERAL INFORMATION

The Holley 4160 Series Carburetor Model R-4166A (Figs. 1, 2 and 3) can be considered as two dual downdraft carburetors mounted side by side, each having its own fuel bowl and float system. The two fuel bowls insure a constant supply of fuel for all the fuel metering systems. Fuel from the bowls flow into the primary and the secondary metering bodies where the fuel is mixed with air for all phases of engine operation. This type of metering provides for adequate diagnosis and easier servicing.

The two primary bores have one choke valve, connected to a well type automatic choke. Each bore has its own venturi, booster venturi, main fuel discharge nozzle and throttle valve.

Additional fuel for acceleration is supplied by a diaphragm type, mechanically operated pump which is located on the primary fuel bowl. The pump is actuated from a cam on the primary throttle. An override spring on the pump operating lever prolongs the discharge of fuel for smoother acceleration.

A power valve, mounted on the primary metering body, which is actuated by manifold vacuum, delivers

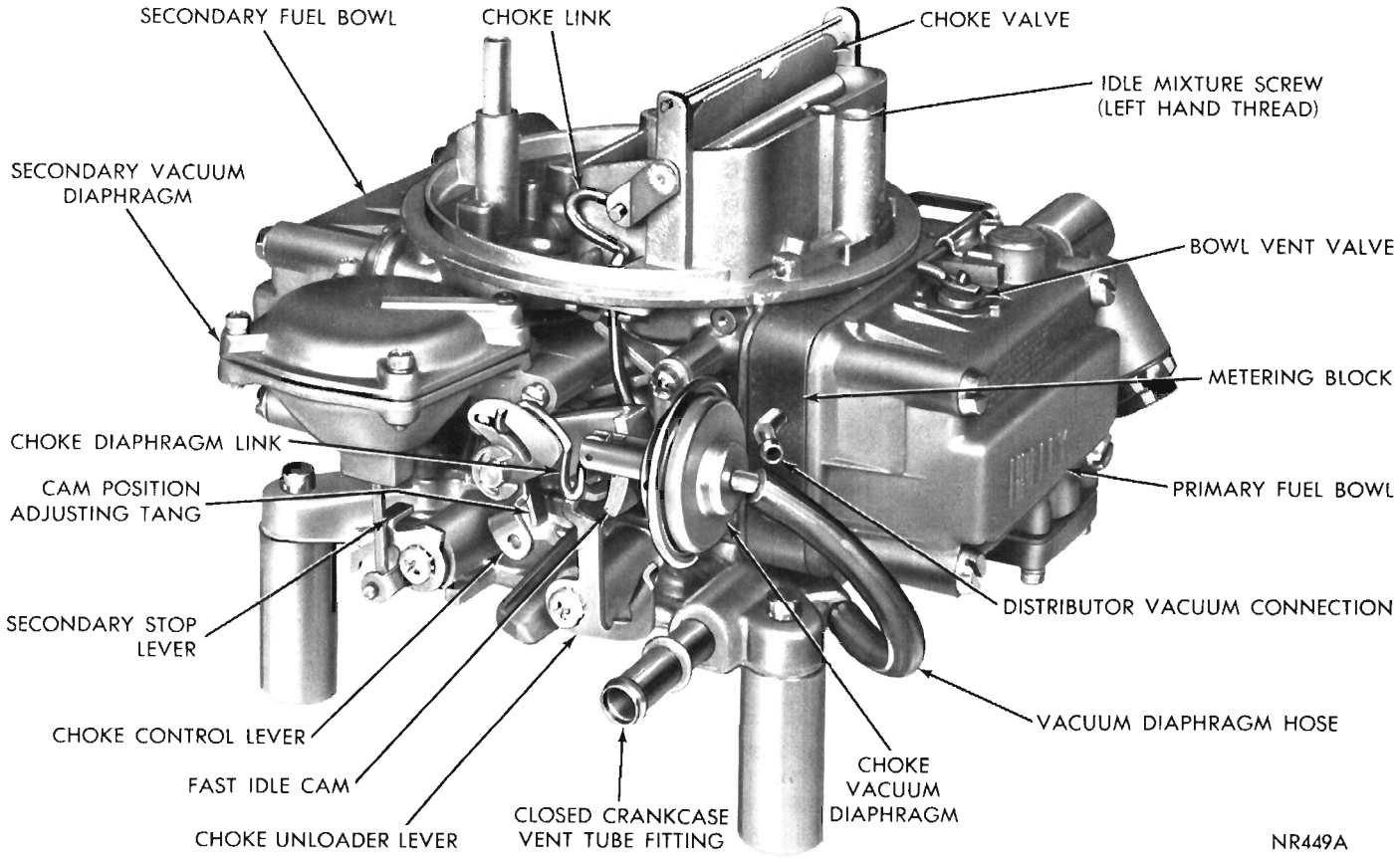

Fig. 1—Carburetor Assembly (R-4166A) Automatic Transmission

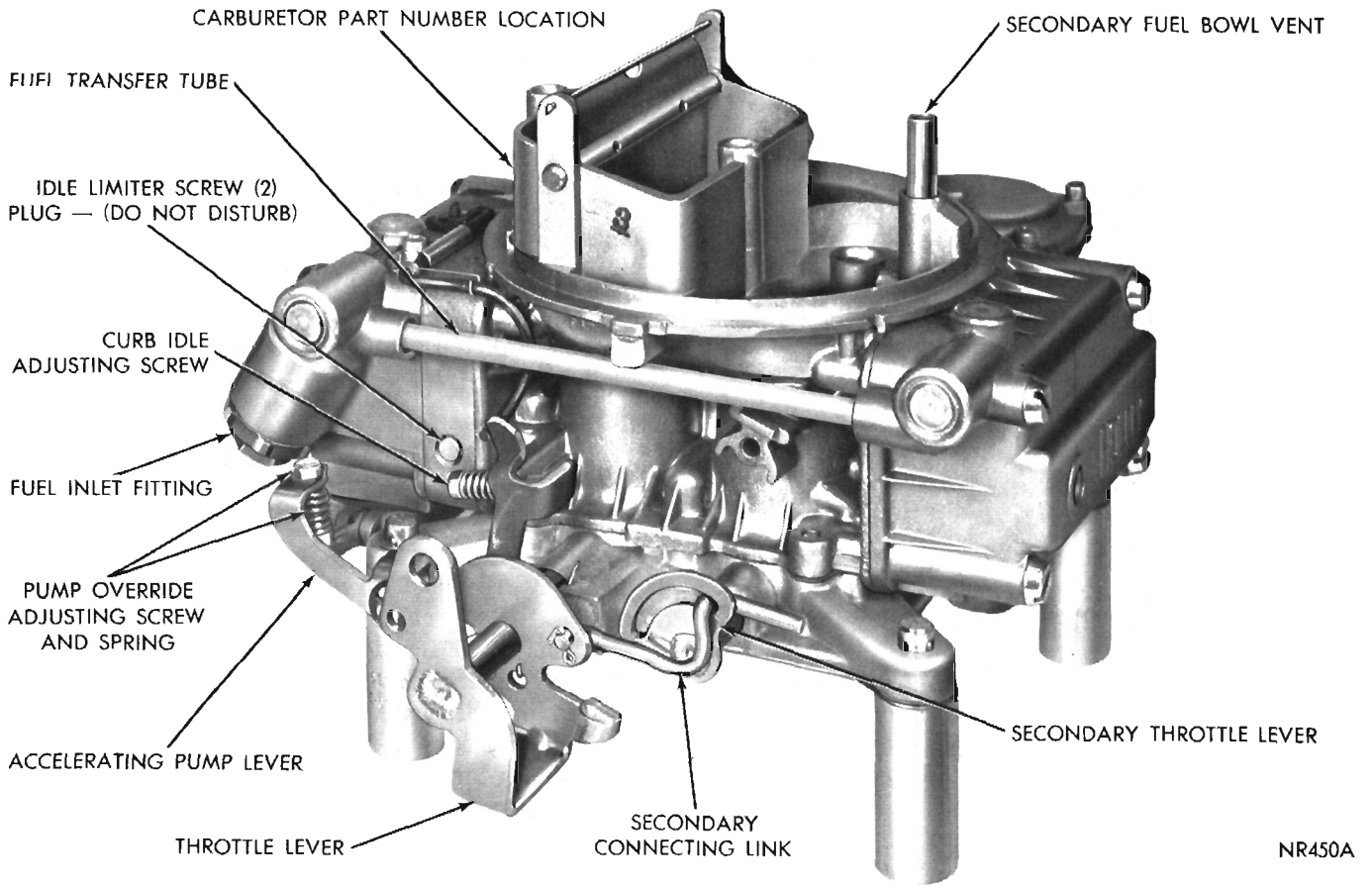

Fig. 2—Carburetor Assembly (Throttle Lever Side)

the additional fuel necessary for full power and high speed operation.

The larger volume of fuel, in two separate bowls exposed to the cooling air stream, is an effective means of reducing percolation and hard starting when the engine is hot. An external vent on the primary bowl, vents the primary fuel bowl when the throttle is closed.

The primary and/or secondary bowls can be quickly removed to adjust the fuel level or change the fuel inlet valve without removing the carburetor from the engine.

Primary Fuel Inlet System

All fuel first enters the primary fuel bowl which supplies the four basic metering systems with the required amount of fuel (Fig. 4).

The fuel enters the fuel bowl through a fuel inlet fitting and into the fuel inlet valve. The amount of fuel entering the fuel bowl is determined by the space between the top of the movable needle and its seat and also by the pressure from the fuel pump.

The fuel inlet system must constantly maintain the specified level of fuel as the basic fuel metering systems are calibrated to deliver the proper mixture only when the fuel is at this level.

A float spring is incorporated under the float to keep the float in a stable position.

The float chamber is vented internally by the vent tube at all times. At curb idle or when the engine is stopped, the chamber is also vented by the external vent on top of the primary fuel bowl. This external vent provides a release of excess fuel vapors from the bowl.

Idle System (Fig. 5)

At idle and low speeds, the air flow through the carburetor is not sufficiently strong enough to draw fuel through the primary barrel venturi for the main metering system. Intake manifold vacuum is high because of the greater restriction to the air flow by the nearly closed throttle valves. This high manifold vacuum is used to provide the pressure differential which operates the idle system.

The carburetor utilizes two idle systems, one for each primary barrel. Since the two passages function identically, only one side will be considered in this explanation (Fig. 5).

At idle, the near atmospheric pressure in the float chamber causes the fuel to flow through the idle system to the greatly reduced pressure are below throttle plate. Fuel flows from the float chamber through a restriction into the curb idle well.

The fuel flows up this vertical idle well through the

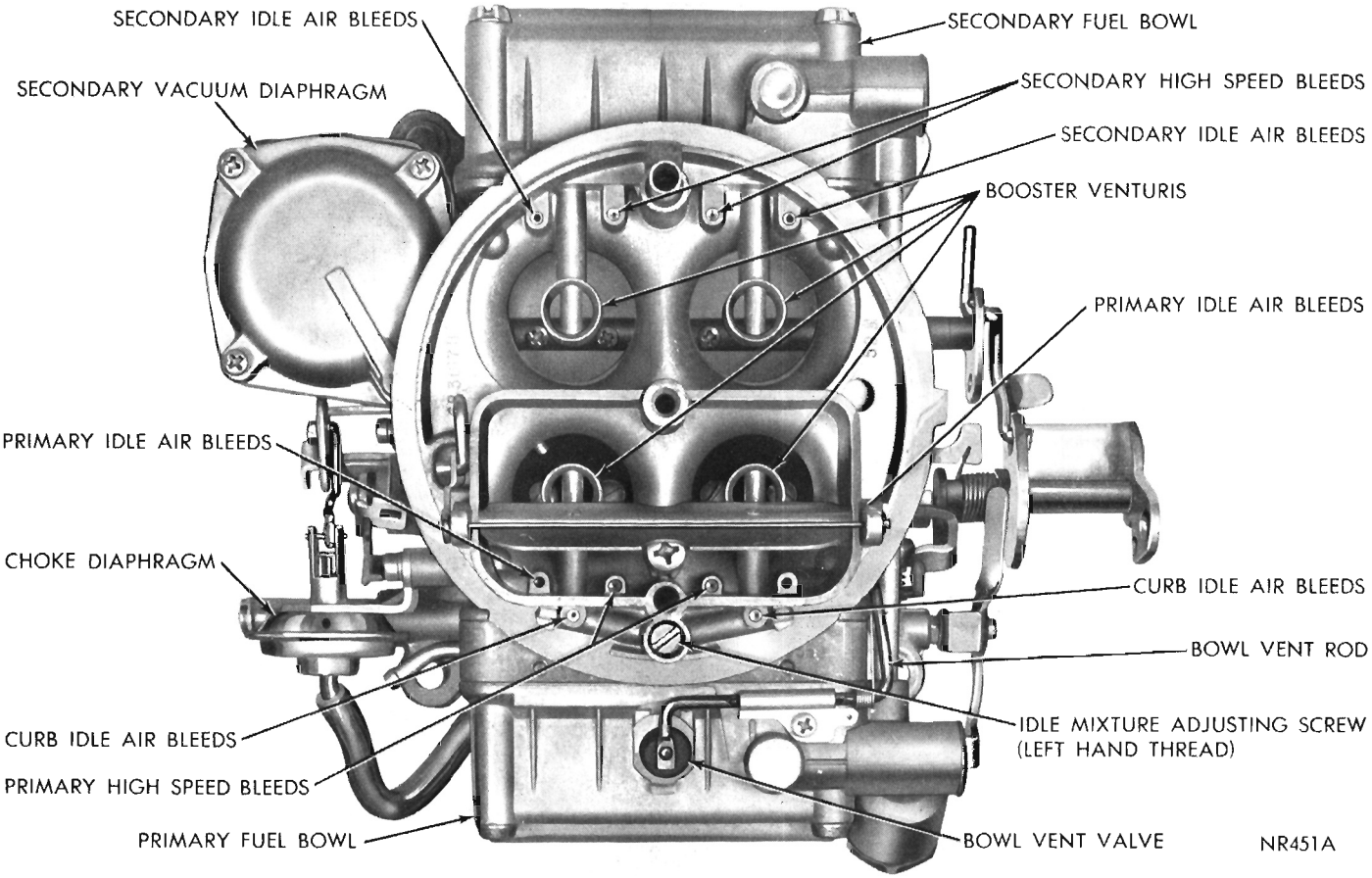

Fig. 3—Carburetor Assembly (Top View)

idle feed restriction, and then it is mixed with air coming in from the idle air bleed. This fuel-air mixture then flows down another vertical passage. At the bottom of this vertical passage the fuel-air mixture is metered by an idle limiter screw. (This adjustment is made at the factory and no field adjustment should be required). However, if an adjustment is necessary, refer to "Rough Idle and Low Speed Surge" paragraph under General Information.

The mixture then flows through a channel in the throttle body to the curb idle discharge port. The fuel is discharged into the throttle bore just below the throttle valve.

The air that is supplied to the curb idle system is supplied through two idle air bleed restrictions and by a curb idle air bleed adjusting screw.

This is the only screw used to adjust curb idle mixture.

The screw is located near the primary bowl vent on the choke air horn.

Turning the screw clockwise leans the curb idle mixture; counter-clockwise enrichens the mixture.

Primary Idle Transfer System (Fig. 5)

A separate off-idle system is used in the carburetor to provide fuel air mixture from idle operation until the main system is in full operation.

Fuel for the idle transfer system enters the main well through the main jet and travels up through the idle transfer tube and crosses over a passage into a vertical channel where air is added from the idle air bleeds. The fuel air mixture is then discharged through the primary transfer slots.

As the throttle valve is opened still wider and engine speed increases, the air flow through the carburetor is also increased. This creates an increased vacuum in the venturi to bring the main metering

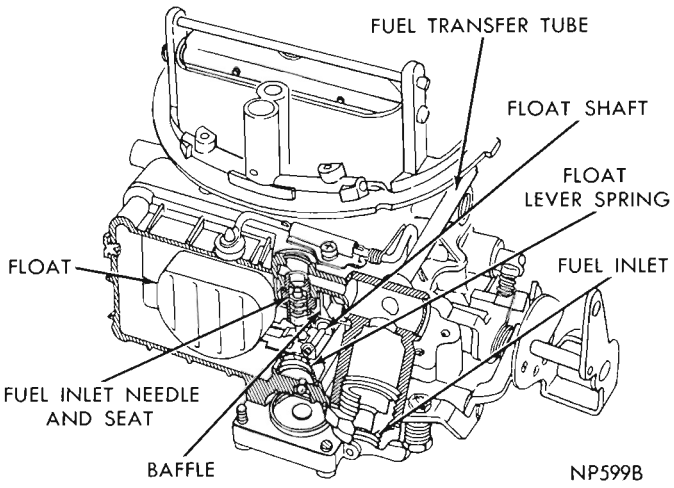

Fig. 4—Primary Fuel Inlet System

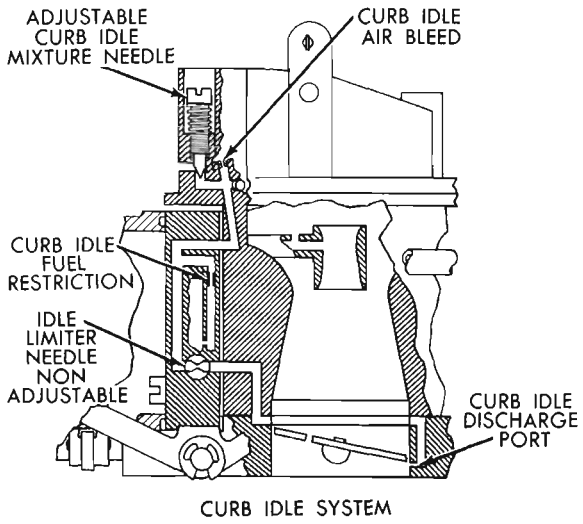

Fig. 5—Idle System

system into operation. The flow from the idle transfer system tapers off as the main metering systems begin discharging fuel. The two systems are engineered to provide smooth gradual transition from idle to cruising speeds.

Main Metering System

As the engine is running, the intake stroke of each piston draws the air through the carburetor venturi and booster venturi. The air, passing through the restriction of the venturi, creates a low pressure commonly called a vacuum. The strength of this low pressure is determined primarily by the velocity of the air flowing through the venturi. This, in turn, is regulated by the speed and power output of the engine. The difference, between the pressure in the booster venturi and the normal air pressure in the float chamber, causes fuel to flow through the main metering system (Fig. 6).

At cruising speed, the fuel flows from the float chamber through the main jet, which measures or meters the fuel flow, into the bottom of the main well. The fuel moves up the main well past the main well air bleed hole in the side of the well. Filtered air,

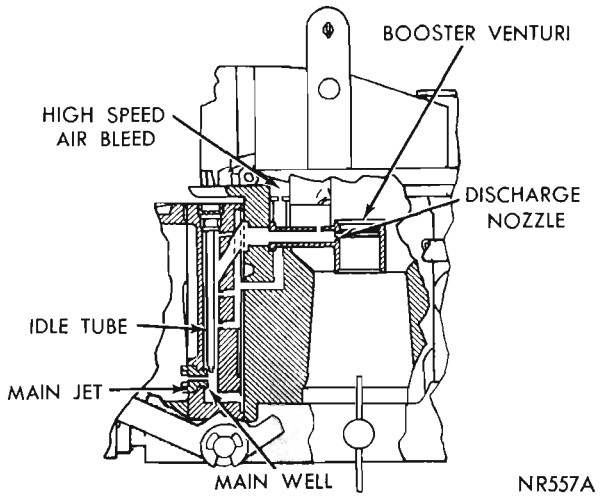

Fig. 6—Main Metering System

enters through the high speed air bleed in the main body and then into the main metering body by interconnecting passages. This mixture of fuel and air, being lighter than raw fuel, responds faster to any change in venturi vacuum and vaporizes more readily when discharged into the air stream of the venturi. The mixture of fuel and air moves up the main well and passes into the short horizontal passage leading to the main body, then through the horizontal channel of the discharge nozzle. This fuel is discharged into the booster venturi and then in the air stream of the carburetor venturi.

The throttle valve controls the amount of fuel-air mixture admitted to the intake manifold, regulating the speed and power output of the engine in accordance with accelerator pedal movement.

Power Enrichment System

During high power operation, the carburetor must provide a mixture richer than is needed when the engine is running at cruising speed under no great power requirements. The added fuel for power operation is supplied by the power enrichment system (Fig. 7).

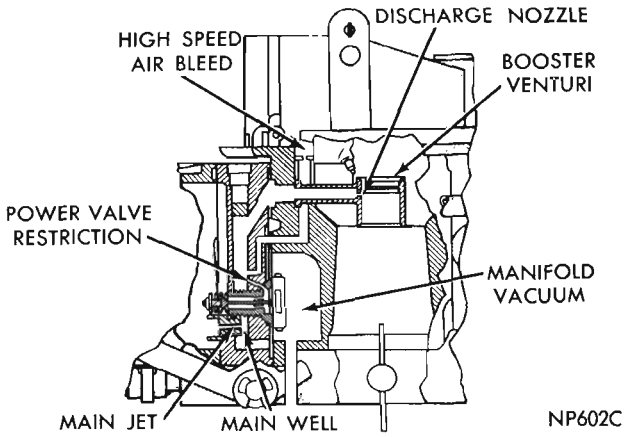

Fig. 7—Power Enrichment System

This system is controlled by manifold vacuum which gives an accurate indication of the power demands placed upon the engine. Manifold vacuum is strongest at idle and decreases as the load on the engine increases. As the load on the engine is increased, the throttle valve must be opened wider to maintain a given speed. Manifold vacuum is thus reduced because the opened throttle valve offers less restriction to air entering the intake manifold.

A vacuum passage in the throttle body transmits manifold vacuum to the power valve chamber in the main body. The power valve which is located in the main metering body is effected by this manifold vacuum. The manifold vacuum, acting on the diaphragm at idle or normal load conditions, is strong enough to hold the diaphragm closed, and overcomes the tension of the power valve spring. When high power demands place a greater load on the engine and manifold vacuum drops below a predetermined point, the power valve spring overcomes the reduced vacuum opening the power valve. Fuel flows from the float chamber, through the valve and out the small holes in the side of the valve through the diagonal restrictions in the main metering body and then into the main well. In the main well, the fuel joins the fuel flow in the main metering system, enriching the mixture.

As engine power demands are reduced, manifold vacuum increases. The increased vacuum acts on the diaphragm, overcoming the tension of the power valve spring. This closes the power valve and shuts off the added supply of fuel which is no longer required.

Accelerating Pump System

Upon acceleration, the air flow through the carburetor responds almost immediately to the increased throttle opening.

Therefore during the brief interval before the fuel, which is heavier than air, can gain speed and maintain the desired balance of fuel and air, the accelerating pump supplies fuel until the other systems can once again provide the proper mixture (Fig. 8).

The accelerating pump is located in the bottom of the primary fuel bowl. The pump begins to function when the pump operating lever is actuated by throttle movement. When the throttle is opened, the pump linkage, actuated by a cam on the primary throttle shaft, forces the pump diaphragm up. As the diaphragm moves up, the pressure forces the pump inlet check ball on its seat preventing fuel from flowing back into the float chamber. The fuel flows from the short passage in the fuel bowl into the long diagonal passage in the primary metering body. The fuel passes into the main body and then in the pump discharge chamber. The pressure of the fuel causes the discharge needle valve to raise and fuel is discharged into the venturi.

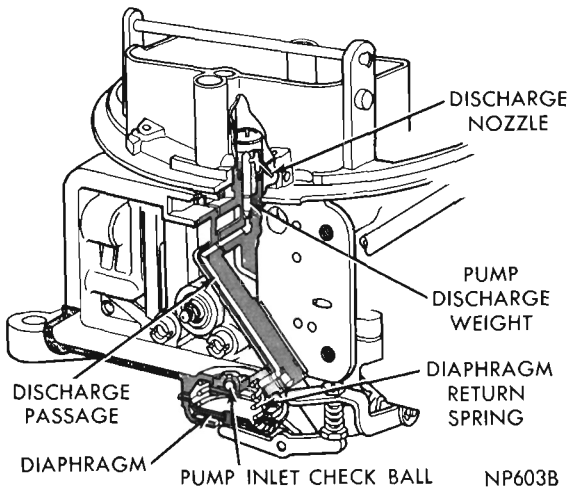

Fig. 8—Accelerating Pump System

As the throttle is moved toward the closed position, the linkage returns to its original position and the diaphragm spring forces the diaphragm down. As the diaphragm returns to its original position the pump inlet check ball is moved off its seat and the diaphragm chamber is filled with fuel from the float bowl.

Secondary Throttle Operating System

At lower speeds, the secondary throttle valves remain nearly closed, allowing the engine to maintain satisfactory fuel air velocities and distribution. When engine speed increases to a point where additional breathing capacity is needed, the vacuum controlled secondary throttle valves open automatically.

Vacuum taken from one of the primary barrels and one of the secondary barrels acts upon a diaphragm which controls the secondary throttle valves. At high speeds when engine requirements approach the capacity of the two primary bores, the increased primary venturi vacuum moves the diaphragm, compressing the diaphragm spring. The diaphragm, acting through the diaphragm link and lever, will commence to open the secondary throttle valves (Fig. 9).

The position of the secondary throttle valves depends on the strength of the vacuum. This in turn, is determined by the air-flow through the bores to the engine. As the air-flow increases, a greater secondary throttle valve opening will result and the secondary barrels will supply a greater portion of the engine's requirements. As top speed is reached, the secondary throttle valves will approach wide open.

As the secondary throttle valves begin to open, a vacuum is created in the secondary barrels, first at the throttle valves and then, as air flow increases, at the throat of the secondary venturi. This vacuum assists the secondary metering system to operate.

When engine speed is reduced, venturi vacuum in

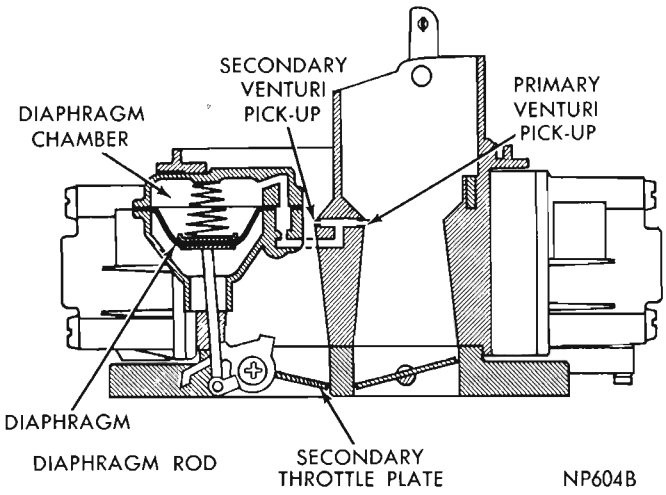

Fig. 9—Secondary Throttle Operating System

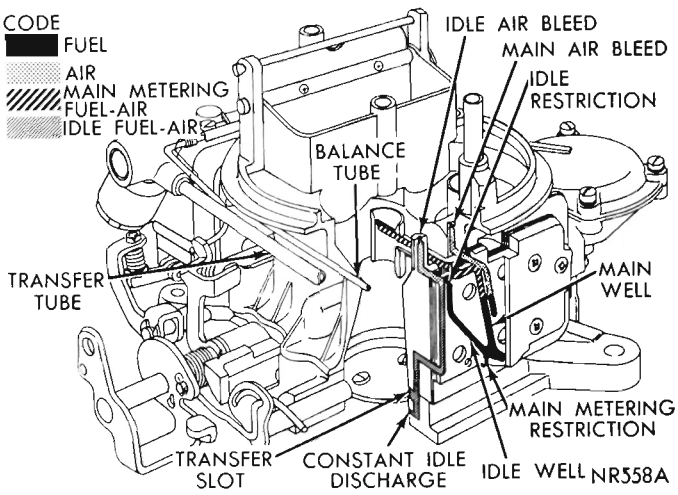

Fig. 10—Secondary Fuel Metering System

the bores become weaker. As the vacuum acting on the diaphragm is lessened, the load on the diaphragm spring will commence closing the secondary valves. The diaphragm spring is assisted by the design of the secondary valves. Each secondary valve is slightly offset. When the valves are closing, the combined force of manifold vacuum and the air stream has greater effect on the larger, upstream area of the valves forcing the valves to a closed position. The secondary valves are retained in the closed position when the primary valves are fully closed by the secondary throttle connecting rod. This rod, which is fastened to the primary throttle lever, rides in a slot in the secondary throttle lever.

Secondary Fuel Metering Systems

The secondary system is supplied with fuel from the secondary fuel bowl, which receives its fuel through a connecting tube, from the primary fuel inlet.

The secondary fuel bowl is equipped with a fuel inlet assembly which regulates the flow of fuel into the bowl, the same as the primary fuel bowl. The secondary fuel inlet system must maintain a specified level of fuel as the two secondary fuel systems are calibrated to deliver the proper mixture only when the fuel is at this level.

As the valves begin to open the fuel flows through the secondary metering restrictions into the idle well (Fig. 10).

A secondary fixed curb idle discharge passage supplies fuel directly to the intake manifold, thus allowing a smoother idle.

When the secondary throttle valves are opened further the pressure differential causes the secondary main metering system to begin functioning.

Automatic Choke

The automatic choke supplies enriched fuel-air mixture for starting and operating a cold engine (Fig. 11). Most of the fuel from the carburetor of a cold engine is liquid. This fuel in liquid form burns slowly and incompletely. Power loss and stalls result. The choke valve supplies the extra fuel by restricting air flow during cranking and warm-up. Vacuum created by the restriction causes this fuel flow from both the main metering and idle systems.

The thermostat spring of a cold engine pushes the choke valve toward the closed position. When the engine is started, manifold vacuum acts on both the choke valve and a vacuum diaphragm attached to the carburetor body. This vacuum acts to oppose the thermostat spring and partially opens the choke valve to prevent stalls from richness. The choke shaft does not pass through the center of a choke valve. Instead, it is offset to expose a large area at one side to manifold vacuum. During idle or low temperature cranking, manifold vacuum is not sufficiently strong to open the choke valve. But air impact against the valve

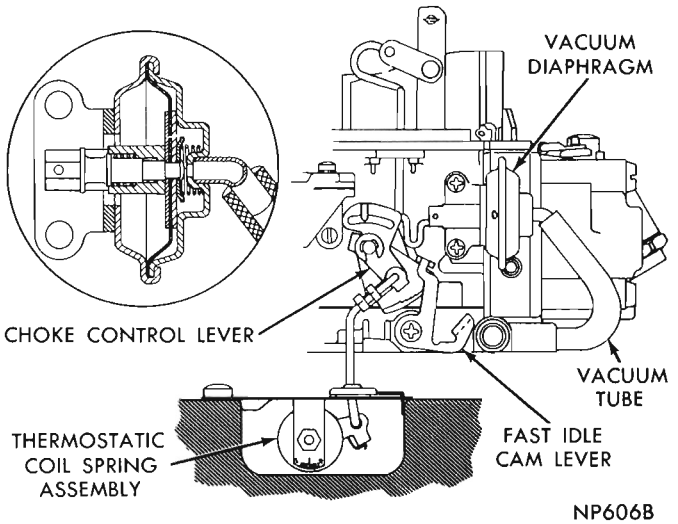

Fig. 11—Automatic Choke System

causes partial opening. These two factors, vacuum and air impact allow ample air to run the engine. Continued running of the engine develops heat and causes the thermostat assembly to move to the open choke position.

During the warm-up period, air flow past the partially open offset choke valve acts to open the valve. Just as in the start cycle, vacuum and air impact combine to control the choke valve. The engine required less choking at high speeds. The offset choke valve, vacuum diaphragm and thermostat spring are engineered to provide satisfactory choking for most conditions of engine speed, output and temperature.

Fast Idle

The choke control lever at the carburetor actuates a fast idle cam during choking. A cam has a series of steps designed to increase carburetor air flow to maintain satisfactory cold engine speed levels. The proper cam step is moved into position as the choke rod is moved from closed to open conditions. Each step permits a slower idle rpm as engine temperature rises and choking is reduced.

Spark Advance

The distributor utilizes changes in air pressure within the carburetor to control spark timing to satisfy all engine speed and load conditions.

In order to obtain a vacuum to operate the spark advance as dictated by the engine speed and load conditions, a port is located in the throttle bore just above the full closed position of the throttle valves, as the throttle is opened, this port is subject to manifold vacuum, which varies with changes in engine load. This port in the throttle body is connected to the main body by a short vertical passage, and then to a passage in the main metering body. This passage leads to an outlet on the side of the main metering body which connects to a single flexible tube to the distributor.

SERVICE PROCEDURES

Servicing the Carburetor

Dirt, dust, water and gummy deposits are some of the main causes for poor carburetor operation. However, proper cleaning and the installation of new parts, where required, will return the carburetor to its originally designed performance.

When overhauling the carburetor, several items of importance should be observed to assure a good job:

(1) All parts should be carefully cleaned in a suitable solvent, then inspected for damage or wear.

(2) Use air pressure only to clear the various orifices and channels.

(3) Replace questionable parts with New Ones.

When checking parts removed from the carburetor, it is at times rather difficult to be sure they are satisfactory for further service. It is, therefore, recommended that in such cases, New Parts be installed.

(4) Always use a complete repair kit when overhauling the carburetor. Using the code number stamped on the airhorn, adjacent to the fuel inlet, refer to the parts catalog and order the correct repair kit for the carburetor being worked on.

DISASSEMBLING CARBURETOR

To disassemble the carburetor (Fig. 1) for cleaning or overhaul, proceed as follows:

(1) Install four elevating legs, Tool T109-287S in mounting flange holes in throttle body, or use Carburetor Stand C-3886. (These tools are used to protect the throttle valves from damage and to provide a suitable base for working).

(2) Remove primary fuel bowl assembly by sliding straight off balance tube (Fig. 2).

(3) Remove primary metering body by sliding straight off balance tube (Fig. 3). Remove plate to body gasket.

(4) Remove accelerating pump operating lever "E" clip and slide lever assembly off stub shaft. Remove adjusting nut, spring and screw.

(5) Remove fuel transfer tube and "O" rings (Fig. 3).

(6) Remove secondary fuel bowl assembly.

(7) Using a clutch head screwdriver (Tool CL-13) remove clutch head screws, carefully work secondary metering body, plate and gaskets off balance tube (Fig. 4).

(8) Remove balance tube, washers and "O" rings by sliding out of main body (either end).

(9) Disconnect choke diaphragm hose from throttle body fitting, then remove diaphragm assembly, at the same time disengaging link from fast idle cam lever.

(10) Remove "E" clip that retains fast idle cam lever and cam. Slide lever and cam off stub shaft, and at the same time, disengage choke rod from cam lever. (Note position of fast idle cam to cam lever.)

(11) Remove secondary diaphragm attaching screws and remove diaphragm assembly. Disengage diaphragm stem from secondary stop lever. Remove gasket.

(12) Remove pump discharge nozzle retaining screw, then lift out discharge nozzle. Remove gasket from nozzle (top and bottom).

(13) Invert carburetor and drop out pump discharge jet needle from discharge passage.

(14) With carburetor inverted, remove screws that

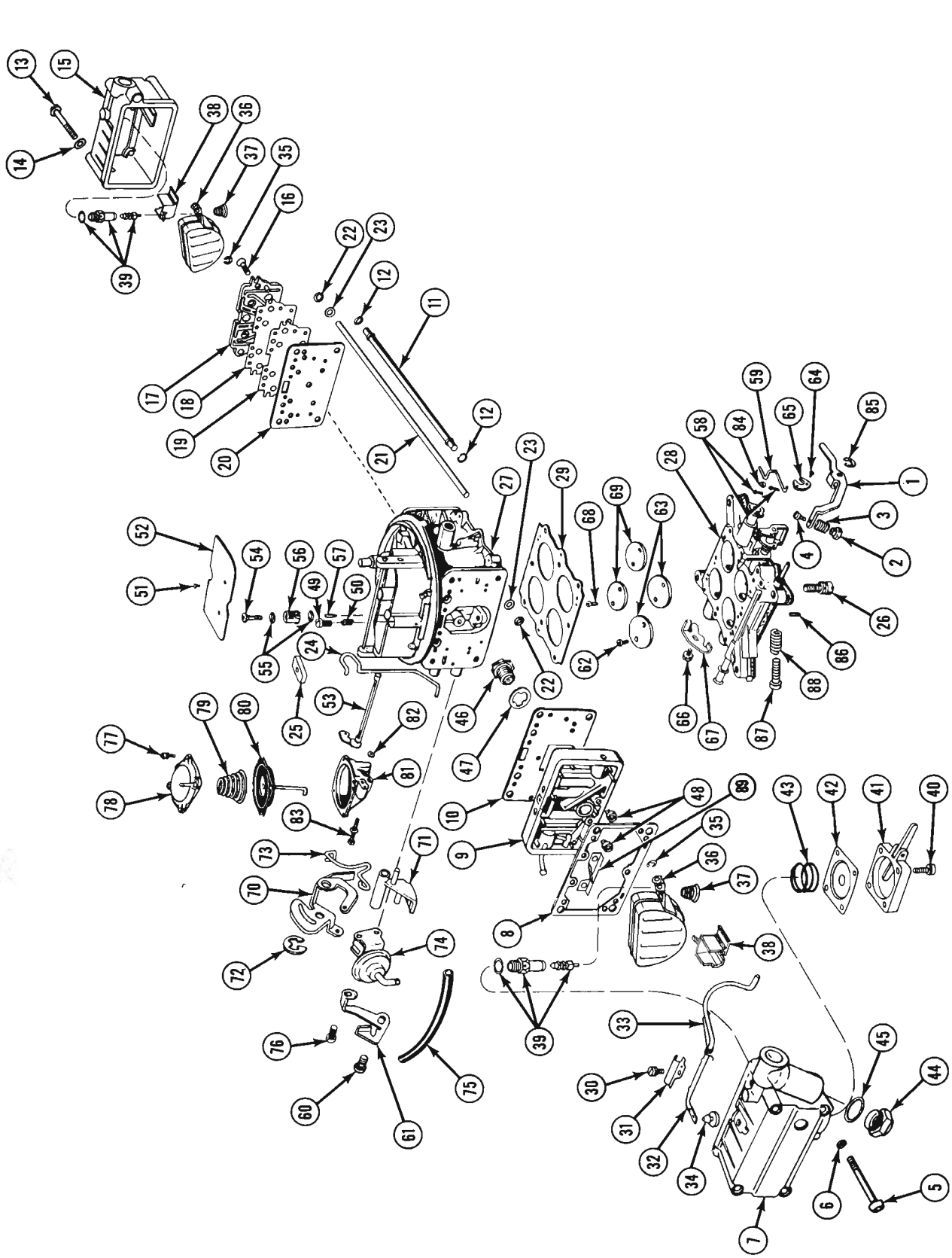

Fig. 1—Carburetor Assembly (Exploded View)

1—Lever, Pump Operating
2—Locknut
3—Spring override
4—Screw, Pump Adjusting
5—Screw, Fuel Bowl (Primary)
6—Gasket, Bowl Screw
7—Fuel Bowl (Primary)
8—Gasket, Fuel Bowl
9—Metering Body (Primary Side)
10—Gasket, Metering Body
11—Fuel Tube (Float Bowl Connecting)
12—"O" Rings, Fuel Tube
13—Screw, Fuel Bowl (Secondary)
14—Gasket, Bowl Screw
15—Fuel Bowl (Secondary)
16—Screw, Metering Body (Secondary)
17—Metering Body (Secondary)
18—Gasket, Metering Body (Secondary)
19—Plate, Metering Body (Secondary)
20—Gasket, Metering Body Plate
21—Balance Tube
22—Washers, Balance Tube
23—"O" Rings, Balance Tube
24—Choke Link
25—Seal, Choke Rod
26—Throttle Body Screws
27—Main Body
28—Throttle Body
29—Gasket, Main to Throttle Body
30—Screw, Bowl Vent Valve Rod Clamp
31—Clamp, Valve Rod
32—Rod, Bowl Vent Valve
33—Spring, Vent Valve Rod
34—Valve, Bowl Vent
35—Retainer, Clip, Float
36—Float
37—Spring, Float
38—Baffle, Float
39—Needle Valve and Seat
40—Screws, Fuel Pump Cover
41—Cover Assembly, Fuel Pump
42—Diaphragm, Fuel Pump
43—Spring, Fuel Pump Diaphragm
44—Fitting, Fuel Inlet
45—Gasket, Fuel Inlet, Fitting
46—Valve Assembly, Power
47—Gasket, Power Valve
48—Primary Jets
49—Needle, Idle Adjusting (Left Hand Thread)
50—Spring, Idle Needle
51—Screws, Choke Valve
52—Choke Valve
53—Choke Shaft & Lever Assembly
54—Discharge Nozzle Screw, Pump
55—Gasket, Nozzle Screw
56—Nozzle, Pump Discharge
57—Needle, Pump Discharge Jet
58—Cotter Pins, Connecting Rods
59—Rod, Secondary Connecting
60—Screw and Lockwasher, Fast Idle Cam Lever
61—Lever, Fast Idle Cam
62—Screws, Primary Throttle Valve
63—Throttle Valves, Primary
64—Screw, Pump Cam
65—Pump Cam
66—Screw and Lockwasher, Secondary Stop Lever
67—Lever, Secondary Stop
68—Screws, Secondary Throttle Valves
69—Throttle Valves, Secondary
70—Fast Idle Cam Lever
71—Fast Idle Cam
72—Retainer (E-Clip)
73—Choke Diaphragm Link
74—Choke Diaphragm Assembly
75—Choke Vacuum Hose
76—Choke Diaphragm Bracket Screw
77—Secondary Diaphragm Cover Screw
78—Diaphragm Cover (Machine)
79—Secondary Diaphragm Return Spring
80—Secondary Diaphragm Assembly
81—Secondary Diaphragm Housing (Machine)
82—Secondary Diaphragm Housing Gasket
83—Secondary Diaphragm Assembly Screw
84—Throttle Connecting Rod Retainer Washer
85—Pump Operating Lever (E-Clip)
86—Secondary Stop Screw
87—Throttle Stop Screw
88—Throttle Stop Screw Spring
89—Baffle

attach the throttle body to main body (Fig. 5). Remove throttle body and discard gasket.

Disassembling the Fuel Bowls (Primary and Secondary)

Primary

(1) Remove primary bowl vent valve assembly (Fig. 6).

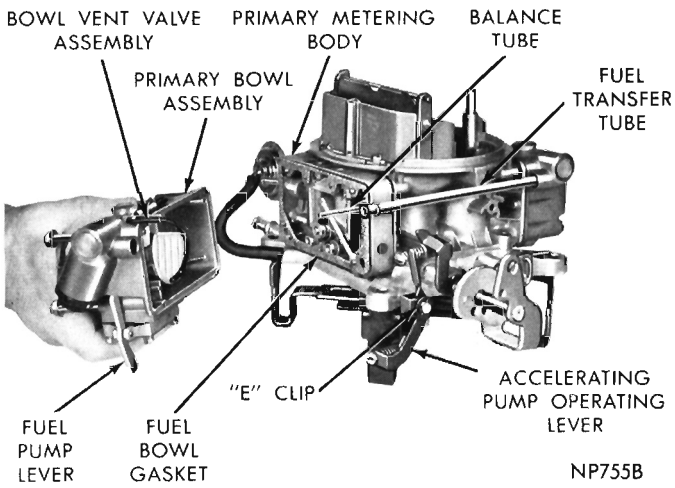

Fig. 2—Removing or Installing Primary Fuel Bowl

(2) Remove float retainer "E" clip, then slide float and spring out of float chamber. (As float is being removed, the fuel inlet needle may drop out of seat assembly.) Remove float baffle.

(3) Remove fuel inlet needle valve seat. Discard the gasket.

(4) Remove screws attaching accelerator pump cover. Remove cover, then carefully remove diaphragm and spring.

(5) Remove fuel inlet fitting and discard gasket.

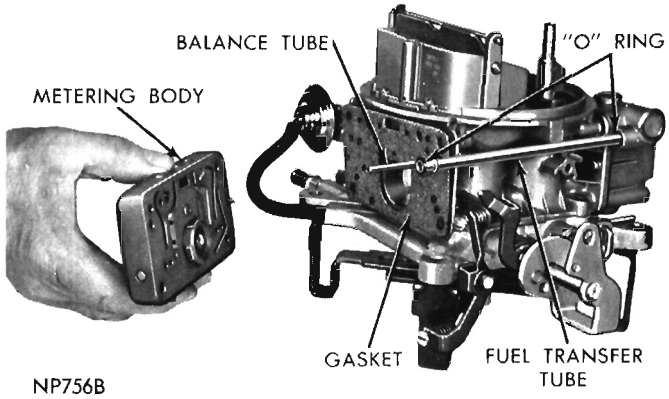

Fig. 3—Removing or Installing Primary Metering Body and Plate

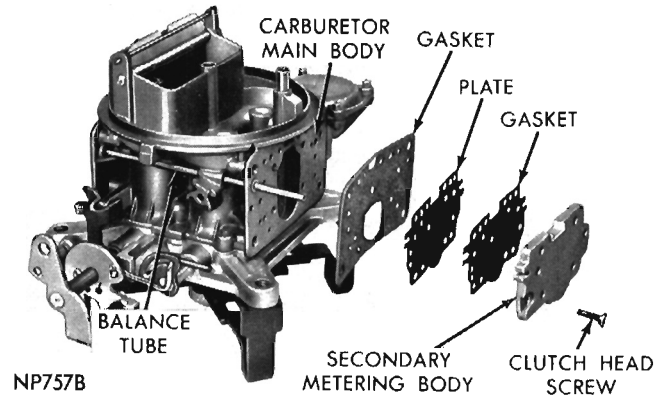

Fig. 4—Secondary Metering Body, Plate and Gaskets

Secondary

(1) Remove float retainer "E" clip, then slide float and spring out of float chamber. (As float is being removed, the fuel inlet needle may drop out of seat assembly.) Remove float baffle.

(2) Remove fuel inlet needle valve seat. Discard gasket.

It should be noted that the Primary and Secondary fuel bowl baffles are of a different design and should be installed in the correct bowl at reassembly.

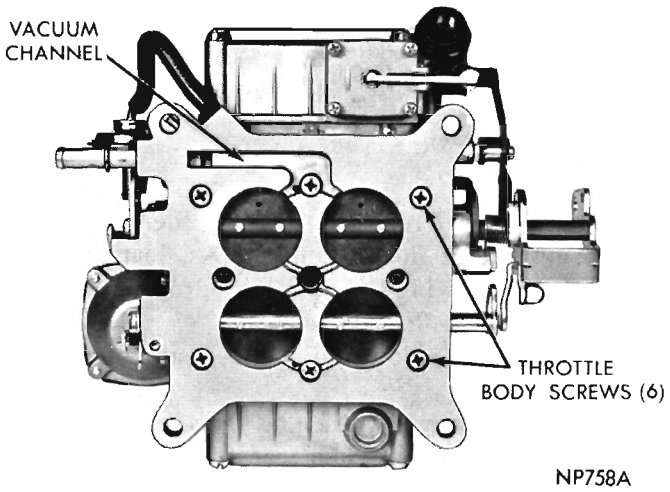

Fig. 5—Carburetor Assembly—Inverted

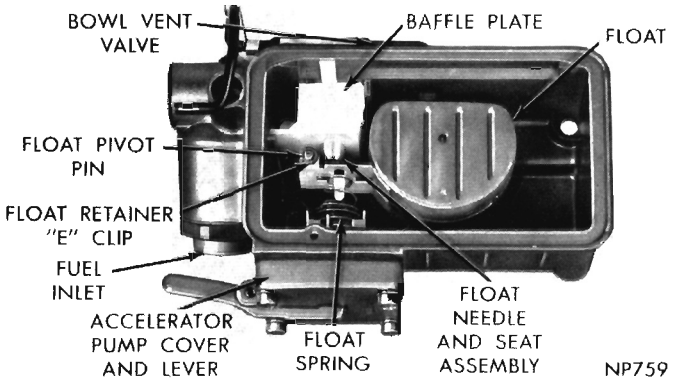

Fig. 6—Primary Fuel Bowl Assembly

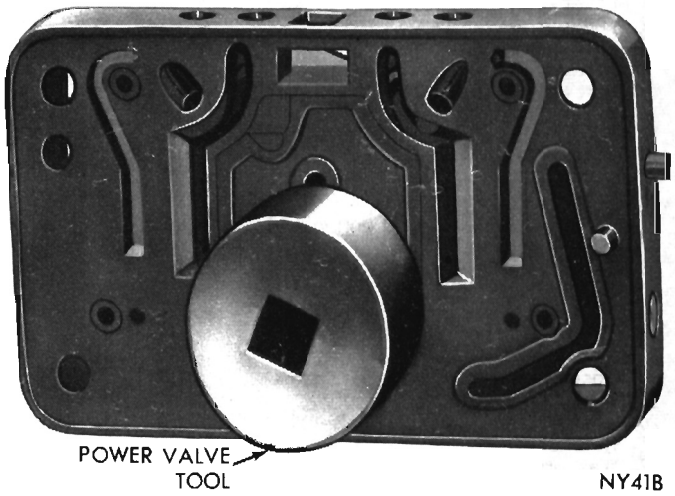

Fig. 7—Removing or Installing Power Valve

Disassembling the Main Metering Body

Primary

(1) Using Tool C-3747, remove power valve assembly from primary metering body (Fig. 7).

(2) Using Tool C-3748, remove main metering jets. (Fig. 8).

(3) Remove idle adjusting needles and gaskets.

Secondary

No disassembly required, but it is very important that the well bleed parts, main metering restrictions and idle feed restrictions are clean (Fig. 9).

Disassembling the Secondary Diaphragm

(1) Remove the diaphragm cover screws and separate diaphragm cover from housing.

(2) Remove diaphragm return spring from cover, then slide diaphragm out of housing.

Disassembling the Throttle Body

CAUTION: In normal routine cleaning and overhaul of the carburetor, do not remove the throttle valves unless they are nicked or damaged. If necessary to remove, proceed as follows:

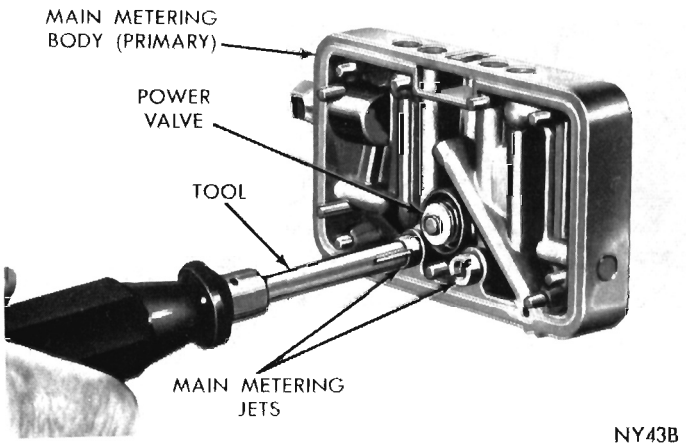

Fig. 8—Removing or Installing Main Metering Jets

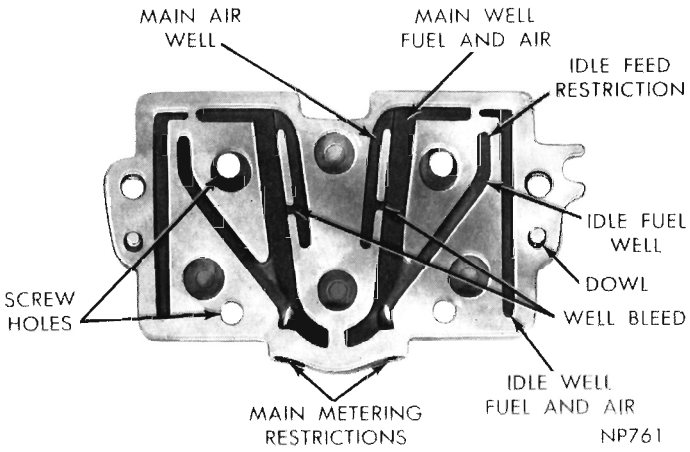

Fig. 9—Secondary Metering Body

(1) Remove screws that hold throttle valves to throttle shafts. **These screws are staked to prevent loosening and care is necessary to avoid breaking off in shaft. Remove staking with a file.**

(2) Slide damaged throttle valves out of bores. It should be noted at this time, that the secondary throttle valves are thicker than the primary valves. **Do not install secondary valves in primary bores or visa versa as the relationship of the primary valves to the idle transfer port and spark advance control ports is carefully established for one particular assembly.**

CLEANING CARBURETOR PARTS

The recommended solvent for gum deposits is denatured alcohol which is easily obtainable. However, there are other commercial solvents, (such as Metalclene) which may be used with satisfactory results.

The choke diaphragm can be damaged by solvents. Avoid placing the diaphragm assembly in ANY liquid. Clean the external surfaces with a clean cloth or soft wire brush. Shake dirt or other foreign material from the stem side of the diaphragm. Depressing the diaphragm stem to the retracted position, will provide an additional hole for the removal of dirt. Compressed air can be used to remove loose dirt, **but should not be connected to the vacuum inlet fitting.**

IMPORTANT: If the commercial solvent or cleaner recommends the use of water as a rinse, it should be "HOT". After rinsing, all trace of water must be blown from the passages with air pressure. It is further advisable to rinse all parts in clean gasoline or kerosene to be certain no trace of moisture remains. Never clean jets with a wire, drill or other mechanical means because the orifices may become enlarged, making the fuel mixture too rich for proper performance.

DO NOT clean any rubber diaphragms in cleaning solvent because of possible damage.

INSPECTION AND REASSEMBLY

Throttle Body

If the throttle valves were removed because of damage, install new valves as follows:

(1) Slide new primary throttle valves in position on throttle shaft, with the valve number on the bottom (flange side) and toward idle transfer and spark advance control ports.

(2) Install new attaching screws but do not tighten.

(3) Hold valves in place with fingers. (Fingers pressing on high side of valves.)

(4) Tap valves lightly with screwdriver in this position to center in bores. Tighten securely. Operate the throttle shafts. From closed to open position, they must operate smoothly without drag or sticking. Hold throttle body up to a strong light. The light which is visible around the outer diameter of the valves and the bores should be uniform.

(5) Install secondary throttle valves in the same manner as described previously. The numbers stamped on the valves must be toward idle transfer and spark advance ports in primary bores. For adjustment (See Secondary Throttle Adjustment).

Assembling the Main Metering Body

(Primary)

(1) Install new idle mixture adjusting needle gaskets and then install needles finger tight. Back off one full turn for approximate adjustment (Fig. 3).

(2) Slide a new gasket over power valve and install, using Tool C-3747. Tighten securely (Fig. 7).

(3) Install main metering jets (Fig. 8), using Tool C-3748. Tighten securely.

Assembling the Fuel Bowls

Primary

(1) Install accelerator pump spring in position in fuel bowl, followed by diaphragm and pump cover. (When installing diaphragm, be sure contact button is toward pump lever in cover.) (Fig. 10).

(2) Place cover over diaphragm (with lever on fuel inlet fitting side) (Fig. 10). Install attaching screws and tighten securely.

(3) Install new gasket on fuel inlet needle seat (Fig. 11) then install in fuel bowl. Tighten securely. Slide fuel inlet needle into seat.

(4) Install float baffle in position, then slide float hinge over pivot and secure with "E" clip. Install float spring.

(5) Install new gasket over fuel inlet fitting, then install fitting in primary fuel bowl. Tighten securely.

Secondary

(1) Install new gasket on fuel inlet needle seat (Fig.

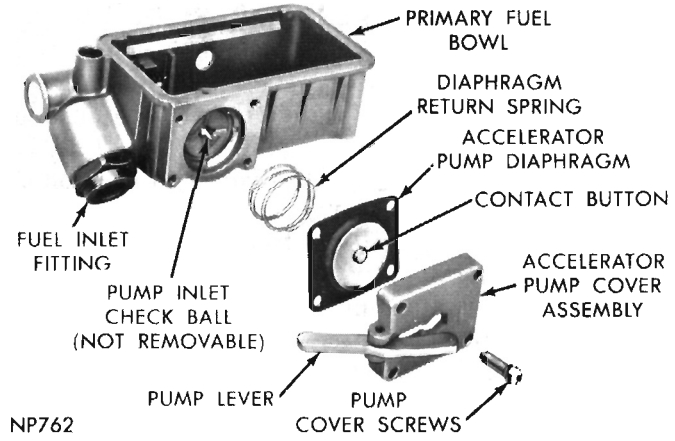

Fig. 10—Accelerating Pump (Exploded View)

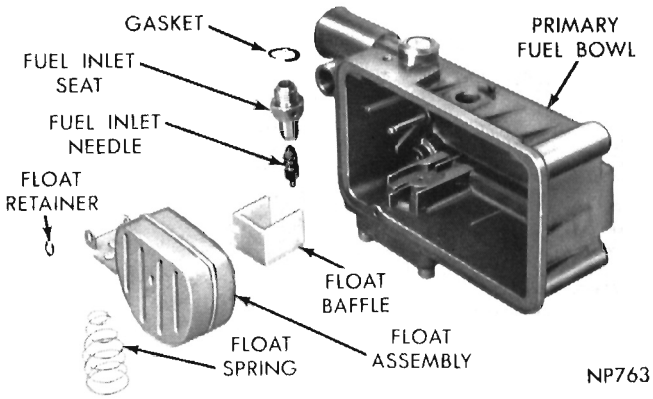

Fig. 11—Float, Needle, Seat and Baffle (Exploded View)

11), then install in fuel bowl. Tighten securely. Slide fuel inlet needle into seat.

(2) Install float baffle in position, then slide float hinge over pivot and secure with "E" clip. Install float spring.

Adjusting the Floats

(1) Invert the primary fuel bowl and using a 15/64 inch drill shank or gauge, measure the clearance between toe of float and surface of fuel bowl. (Fig. 12). If an adjustment is necessary, bend float tang until correct clearance has been obtained.

(2) Invert the secondary fuel bowl and using a 17/64 inch drill shank or gauge, measure the clearance between heel of float and surface of fuel bowl (Fig. 12). If an adjustment is necessary, bend float tang until correct clearance has been obtained.

Assembling the Main Body

(1) Place a new gasket on throttle body, then lower main body (Fig. 13) down on throttle body, aligning roll pin guides with openings in main body. Be sure primary bores of throttle body are on the same side as primary venturi.

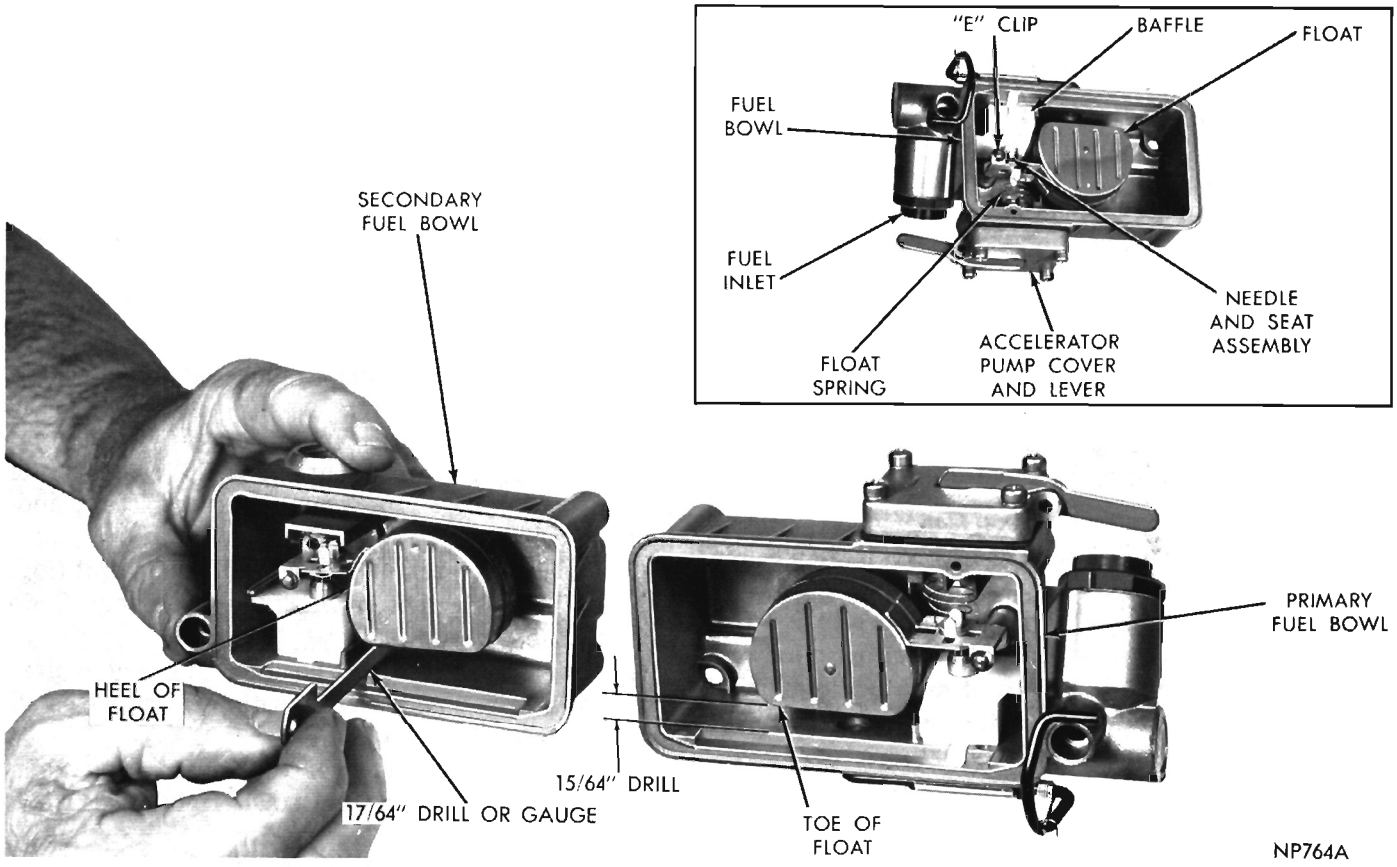

Fig. 12—Checking Float Setting (Primary and Secondary)

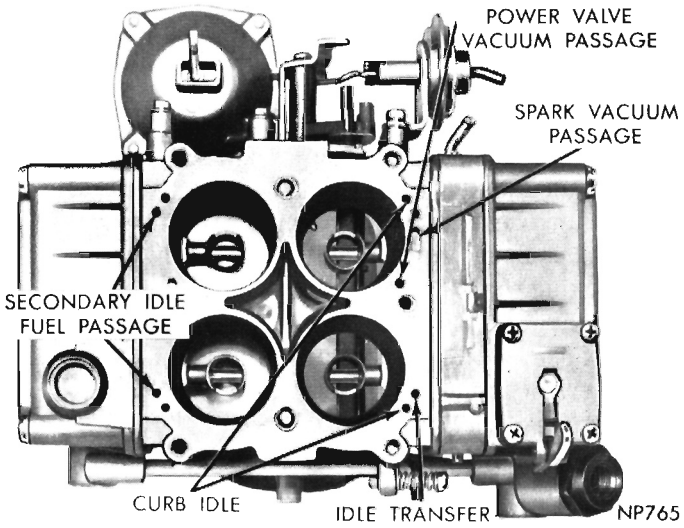

Fig. 13—Main Body Identification (Bottom View)

(2) Holding assembly together, invert assembly and install attaching screws. Tighten securely.

(3) Install balance tube into main body and install new "O" rings and washers at each end. Be sure "O" rings are seated in recesses, followed by washers.

(4) Install a new secondary metering body to main body gasket (Fig. 4) followed by metering body plate, plate gasket and body. Install clutch head screws and tighten securely. (Be sure the main metering restriction ports are at the bottom).

(5) Position balance tube so that only 1 inch extends beyond the secondary metering body (Fig. 14). (Use a 6 inch ruler for this measurement.)

(6) Place a new gasket over primary metering body aligning pin. (Rear) Carefully slide metering body over balance tube and down into position against main body.

(7) Slide a new gasket over metering body alignment studs and carefully position against body.

(8) Carefully install primary fuel bowl over balance tube and down against metering body. Slide new gaskets over the long fuel bowl mounting screws, then install in position through fuel bowl. Tighten securely. If new gaskets are not used, a fuel leak will develop.

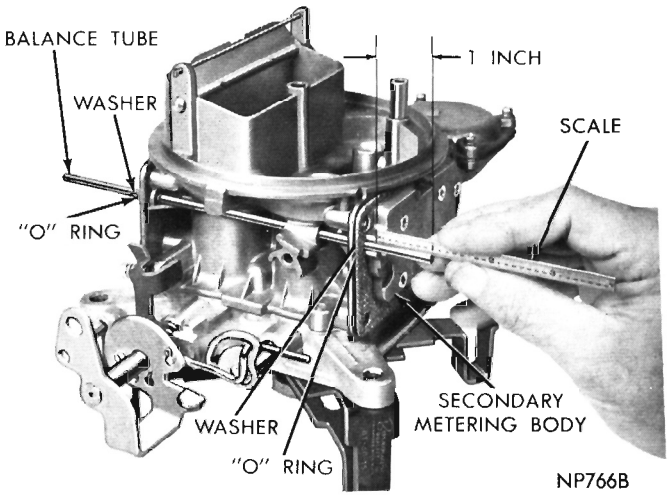

Fig. 14—Positioning Balance Tube

(9) Slide a new "O" ring on each end of fuel tube, then install fuel tube into opening in primary fuel bowl. Press in on tube end until seated.

(10) Carefully slide secondary fuel bowl over balance tube and fuel tube and seat against gasket. Install secondary fuel bowl attaching screws after installing new gasket. Tighten securely.

(11) Install accelerating pump discharge needle in the discharge passage in the center of primary venturi.

To test needle for sealing, pour clean gasoline into primary fuel bowl through vent valve opening. Push down on accelerator pump arm to expel air from the pump passages. Using a small clean brass rod, hold the discharge check needle firmly on its seat. Again press down on pump arm. No fuel should be emitted from the discharge passage. Fuel leakage at the discharge needle indicates the presence of dirt or a damaged check needle. Clean again and install a new needle. Retest for leakage.

If fuel continues to leak past discharge check needle, attempt to reseat as follows:

With the discharge check needle installed, insert a piece of drill rod down on the needle. Lightly tap the drill rod with a hammer to form a new seat. Remove and discard old needle and install a new one. Retest as described previously. If the service fix does not correct the condition, a new carburetor will have to be installed.

(12) Install pump discharge nozzle gasket, nozzle and mounting screw and gasket. Tighten screw securely. Test nozzle operation. Press pump lever down. The two streams from the nozzle should be identical and should strike the two venturi in the same spot.

(13) Slide the bowl vent valve shaft down between fuel tube and carburetor body. Hold in position, then install clamp, after engaging stub end of spring in clamp. Install retaining screw and tighten securely.

(14 Loosen choke valve attaching screws slightly.

(15) Tap lightly on choke valve to center valve in air horn. Holding choke valve with the fingers, tighten attaching screws securely. Stake by squeezing with pliers.

(16) Engage fast idle cam with fast idle cam lever, then slide assembly onto stub shaft positioning fast idle cam behind fast idle cam lever. At the same time engage fast idle cam lever with choke rod. Install "E" clip to secure.

Choke Vacuum Diaphragm

Inspect the diaphragm vacuum fitting to be sure

that the passage is not plugged with foreign material. Leak check the diaphragm to determine if it has internal leaks. To do this, first depress the diaphragm stem, then place a finger over the fitting to seal the opening. Release the stem. If the stem moves more than 1/16 inch in ten (10) seconds, the leakage is excessive and the assembly must be replaced.

Install the diaphragm assembly on the carburetor as follows:

(1) Engage choke link in slot in choke lever.

(2) Place the diaphragm on the mounting surface. Install and tighten the attaching screws securely.

(3) Inspect the rubber hose for cracks before placing it on the correct carburetor fitting. Do not connect the vacuum hose to the diaphragm fitting until after the vacuum kick adjustment has been made.

Assembling the Secondary Diaphragm

(1) Slide diaphragm into housing (Fig. 15).

(2) Position diaphragm so that the vacuum hole in housing is aligned with vacuum hole in diaphragm.

(3) Install diaphragm return spring with coiled end snapped over button in cover.

(4) Support diaphragm stem in order to keep diaphragm flat as spring and cover are installed.

(5) Align vacuum port in cover with port in housing then carefully lower cover. Install attaching screws and tighten securely.

(6) Check diaphragm by pressing in on stem and placing finger over port. Diaphragm should stay in retracted position.

(7) Install a new gasket in vacuum passage recess in diaphragm housing, then install secondary diaphragm on main body of carburetor and at the same time engage stem with secondary stop lever. Install screws and tighten securely.

(8) Install pump lever on stub shaft and secure with "E" clip. Slide spring and locknut between fuel pump lever and pump operating lever. Open throttle valve and install adjusting screw. Tighten 2 or 3 threads to hold. The correct setting of the adjusting screw will be covered under adjustments.

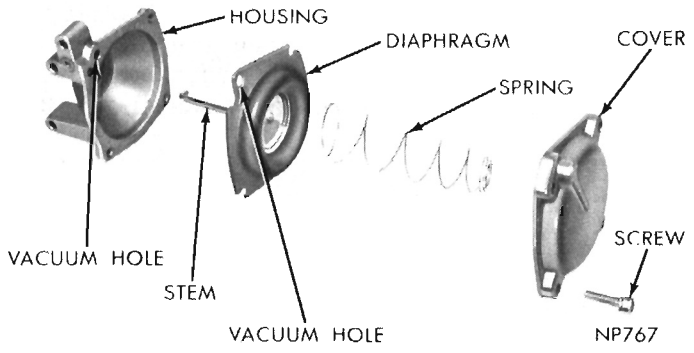

Fig. 15—Secondary Throttle Diaphragm (Exploded View)

CARBURETOR ADJUSTMENTS

It is very important that the following adjustments be made on a reconditioned carburetor:

Qualifying the Choke Control Lever
Choke Unloader Adjustment (wide open kick)
Fast Idle Cam Position Adjustment
Vacuum Kick Adjustment (On or off vehicle)
Fast Idle Speed Adjustment (On the vehicle)
Checking the Bowl Vent Valve Clearance
Checking the Pump Lever Clearance
Idle Speed Adjustment (Curb idle)
Adjusting the Float
Secondary Throttle Adjustment
Idle Mixture Adjustment
Checking Wet Fuel Level

Checking the Bowl Vent Valve Clearance

To check the bowl vent valve clearance (Fig. 16), proceed as follows:

(1) With throttle valves at curb idle, it should be possible to insert a 5/64 inch drill shank between bowl vent valve and top of primary fuel bowl, with the idle speed properly set.

(2) If an adjustment is necessary, bend rod to change arc of contact with throttle lever, using Tool T109-213 until correct clearance has been obtained.

Checking Accelerator Pump Lever Clearance

To check accelerator pump lever clearance (Fig. 17), proceed as follows:

(1) With throttle valves wide open, and the pump lever held down, it should be possible to insert a .015 inch gauge between adjusting nut and lever.

(2) If an adjustment is necessary, adjust pump override screw until correct clearance has been obtained.

(3) There must be no free movement of pump leverage when throttle is at curb idle.

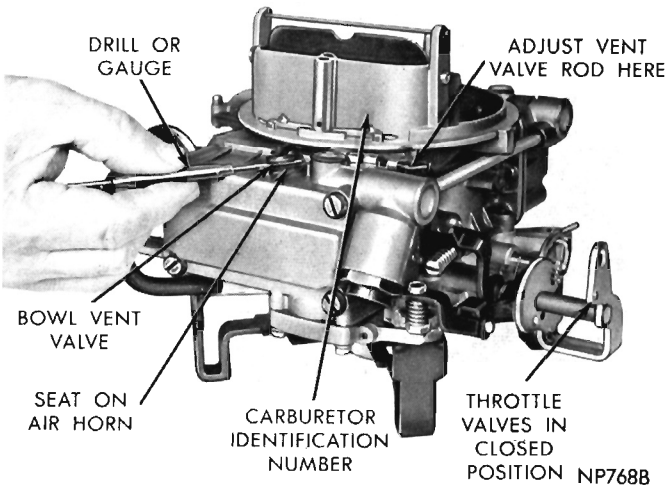

Fig. 16—Checking Bowl Vent Valve Clearance

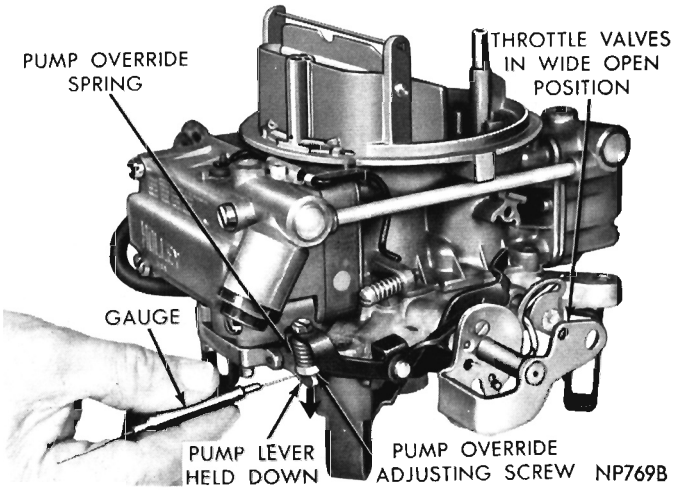

Fig. 17—Checking Accelerator Pump Lever Clearance

Qualifying Choke Control Lever

Adjustment of the choke control lever is necessary to provide correct relationship between choke valve, thermostatic coil spring and the fast idle cam. It should be checked and adjusted (if necessary) after carburetor assembly or as preparation of the choke system linkage before making the Vacuum Kick, Cam Position or Unloader Adjustment. These three adjustments must and should be made after qualification of the choke control lever.

(1) Open the throttle to mid-position.

(2) Close the choke valve by slight pressure on choke control lever.

(3) The top of choke rod hole in control lever should be 1-11/16 ± 1/64 inch above choke assembly (carburetor on engine) or 1-23/32 ± 1/64 inch above carburetor base (Carburetor on bench) (Fig. 18).

(4) Adjust if necessary by bending choke shaft rod at point indicated.

CAUTION: Improper bending will cause binding of rod. Test for free movement between open and closed choke positions and rebend if necessary to eliminate any interferences.

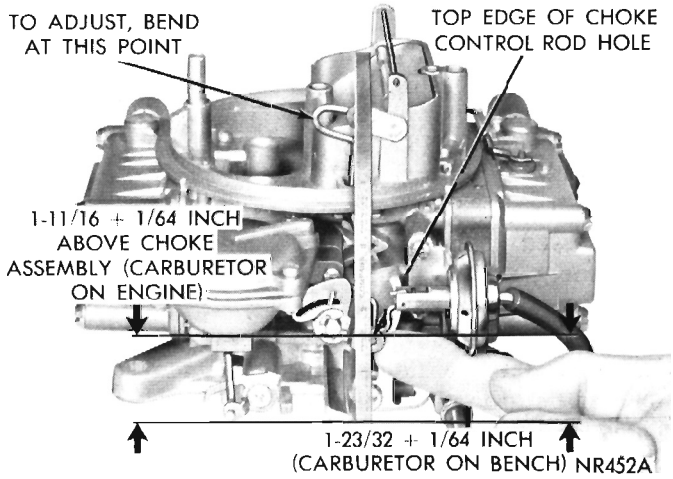

Fig. 18—Qualifying Choke Control Lever

Choke Unloader Adjustment (wide open kick)

The choke unloader is a mechanical device to partially open the choke at wide open throttle. It is used to eliminate choke enrichment during cranking of an engine. Engines which have been flooded or stalled by excessive choke enrichment can be cleared by use of the unloader. Adjust the system as follows:

(1) Qualify the choke control lever, if necessary. (See Qualifying Choke Control Lever Paragraph).

(2) Hold the throttle valves in the wide open position. Insert the specified drill between the upper edge of the choke valve and the inner wall of the air horn (see specifications).

(3) With a finger lightly pressing against the choke control lever, a slight drag should be felt as the drill is being withdrawn. If an adjustment is necessary, bend the indicated tang until correct opening has been obtained (Fig. 19).

Fast Idle Speed Adjustment (On Vehicle)

Fast idle engine speed is used to overcome cold engine friction, stalls after cold starts and stalls because of carburetor icing. Set this adjustment after the vehicle odometer indicates over 500 miles to insure a normal engine friction level. Prepare the engine by driving at least 5 miles. Connect a tachometer and set the curb idle speed and mixture, then proceed as follows:

(1) With the engine off and the transmission in the PARK or NEUTRAL position, open the throttle slightly.

(2) Close choke valve until fast idle screw tang can be positioned on the second hightest-speed step of the fast idle cam (Fig. 20).

(3) Start the engine and determine the stabilized

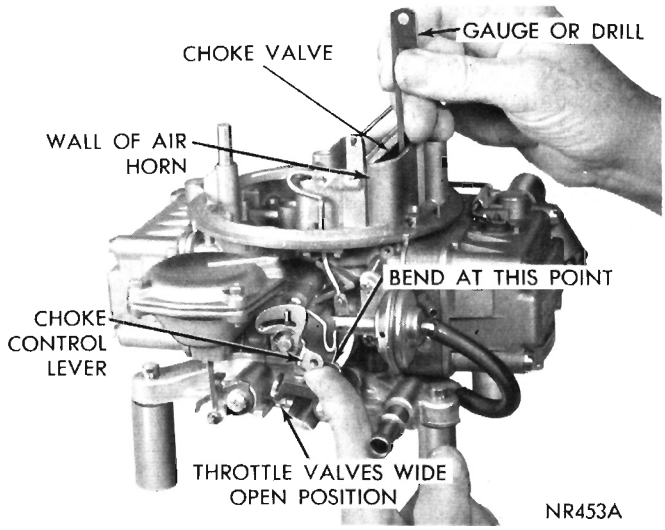

Fig. 19—Choke Unloader Adjustment (Wide Open Kick)

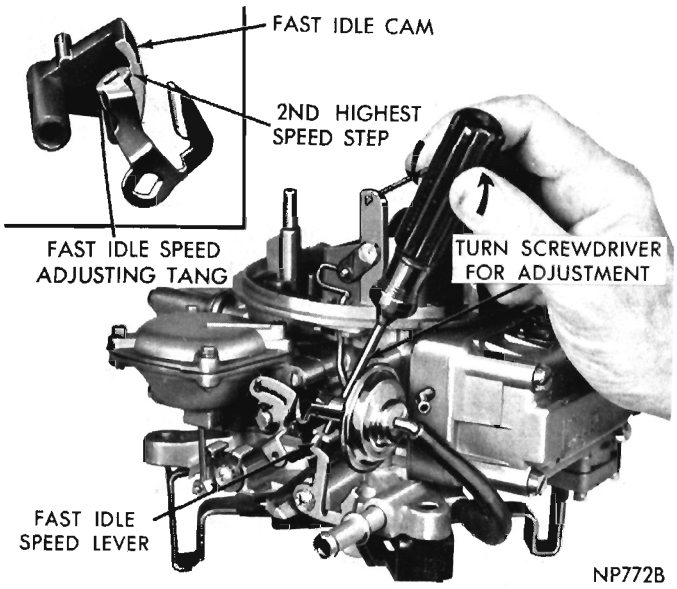

Fig. 20—Fast Idle Speed Adjustment (On Vehicle)

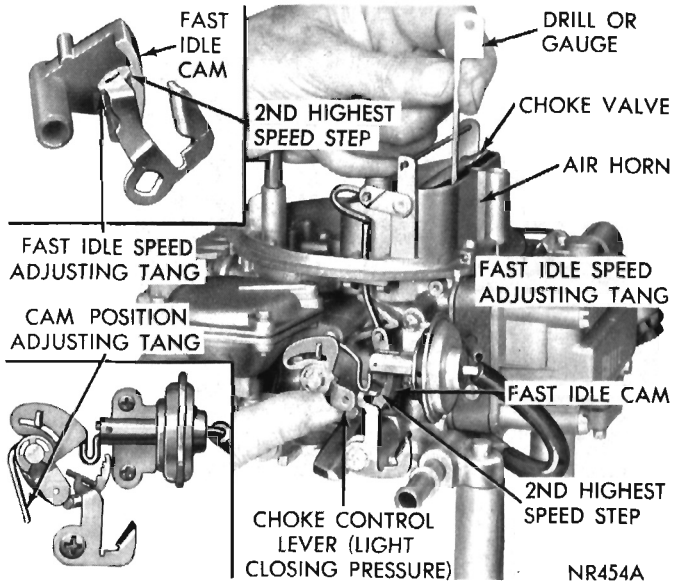

Fig. 21—Fast Idle Cam Position Adjustment

speed. Bend the fast idle tang by use of a screwdriver placed in the tang slot to secure the specified speed.* **CAUTION: Bend only in direction perpendicular to the contact surface of the cam. Movement in any other direction changes the CAM POSITION ADJUSTMENT described earlier.**

(4) Stopping the engine between adjustments is not necessary. However, reposition the fast idle tang on the cam after each speed adjustment to provide correct throttle closing torque.

Fast Idle Cam Position Adjustment

The fast idle engine speed adjustment should be made on the vehicle as described in the Fast Idle Speed Adjustment (on the vehicle) paragraph. However, the Fast Idle Cam Position Adjustment can be made on the bench. This adjustment is important to assure that the speeds of each step of the cam occur at the proper time during engine warm-up.

(1) Qualify the choke control lever, if necessary. (See Qualifying the Choke Control Lever Paragraph).

(2) With fast idle speed adjusting tang contacting second highest speed step on fast idle cam, move choke valve toward the closed position with light pressure on choke control lever.

(3) Insert specified drill between the choke valve and wall of air horn (see specifications).

An adjustment will be necessary if a slight drag is not obtained as the drill is being removed.

(4) To adjust, bend the indicated tang (Fig. 21) until the correct choke valve opening has been obtained.

Vacuum Kick Adjustment (ON or OFF Vehicle)

The choke diaphragm adjustment controls the fuel delivery while the engine is running. It positions the choke valve within the air horn by use of linkage between the choke shaft and the diaphragm. The diaphragm must be energized to measure the vacuum kick adjustment. Vacuum can be supplied by a distributor test machine, another vehicle or vehicle to be adjusted.

(1) If the adjustment is to be made with the engine running, position the fast idle tang (Fig. 21) (Cam position adjustment) to allow choke closure to kick position. If auxiliary vacuum source is to be used, open throttle valves, (engine not running) and move choke to closed position. Release throttle first, then release choke.

(2) When using an auxiliary vacuum source, disconnect the vacuum hose from the carburetor and connect it to the hose from the vacuum supply with a small length of tube to act as a fitting. Removal of the hose from the diaphragm may require forces which damage the system. Apply a vacuum of 10 or more inches to hose.

(3) Insert the specified drill (see specifications) between the choke valve and the wall of the air horn. (Fig. 22). Apply sufficient closing pressure on the lever to which the choke rod attaches to provide a minimum choke valve opening without distortion of the diaphragm link. Note that the cylindrical stem of the diaphragm will extend as an internal spring is compressed. This spring must be fully compressed for proper measurement of the vacuum kick adjustment.

(4) An adjustment will be necessary if a slight drag is not obtained as the drill is being removed. Shorten or lengthen the diaphragm link to obtain the correct choke opening. Length changes should be made by carefully opening or closing the bend provided in the

*See specifications.

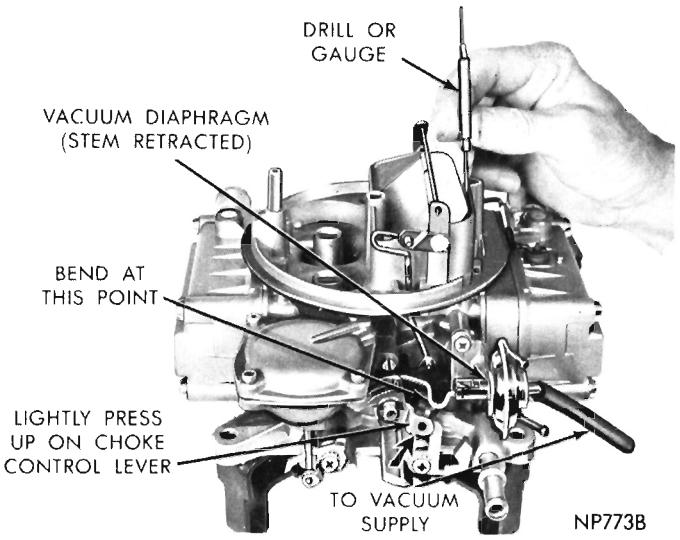

Fig. 22—Vacuum Kick Adjustment

diaphragm link. **CAUTION: DO NOT APPLY TWISTING OR BENDING FORCE TO DIAPHRAGM.**

(5) Reinstall the vacuum hose on the correct carburetor fitting.

(6) Make the following check. With no vacuum applied to the diaphragm, the CHOKE VALVE SHOULD MOVE FREELY between the open and closed positions. If movement is not free, examine the linkage for misalignment or interferences caused by the bending operation. Repeat the adjustment if necessary to provide proper link operation.

Secondary Throttle Adjustment

This adjustment no longer required as valves are pre-adjusted and need no further adjustment.

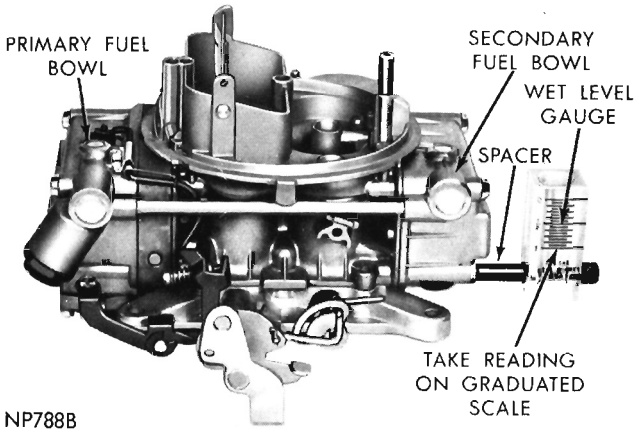

Fig. 23—Checking Wet Fuel Level (on Vehicle)

Idle Speed Adjustment (Curb Idle)

Refer to General Information at front of Group.

Checking Wet Fuel Level (On Vehicle)

Before checking wet fuel level, check the fuel pump pressure to be certain 5 pound reading is obtained.

To check wet fuel level, remove lower bolt furthest from fuel supply (Primary and Secondary) and install C-4051 wet fuel level gauge (Fig. 23).

NOTE: As screw is being removed, fuel will be lost. Start or crank engine and allow fuel bowls to fill. The reading on level gauge should be 9/16 for Primary and 13/16 inch for Secondary, with 5 pounds fuel pump pressure.*

If an adjustment is necessary remove fuel bowl and bend tang on float until correct specifications are obtained.

*Fuel level will vary 1/32 inch for every pound of fuel pump pressure under or over specifications.

FUEL PUMP

INDEX

	Page
Assembling Fuel Pump (RD-267A)	73
Disassembling Fuel Pump (RD-267A)	72
Fuel Vapor Separator	73
General Information	69
Service Diagnosis	70
Specifications	89
Testing Fuel Pump (On Vehicle)	71

GENERAL INFORMATION

Fuel pump Model MS-4588S (Fig. 1), is used exclusively on the 170/225 cubic inch 6 cylinder engine. Model MS-4587S (Fig. 2) is used on the 318, 273 and the 340 cu. in. engine.

Model MS-4589S (Fig. 3) and Model RD-267A (Fig. 6) (optional) is used on the 383 and 440 cubic inch engine. Model MS-4024S is used on the 426 cu. in. engine (Fig. 5). Model MS-4434S is used on the 440 cu. in. H.P. engine (Fig. 3).

The fuel pumps are driven by an eccentric cam that is cast on the camshaft in the 170/225, 383 and 426, 440 cubic inch engines, or by a pressed steel eccentric cam mounted on the gear end of the camshaft in the 273, 318 and 340 cubic inch engine.

As the camshaft rotates, the eccentric cam presses down on the pump rocker arm. (On the 383, 426 and 440 cubic inch engine, a push rod operates between the camshaft and the fuel pump rocker arm.) This

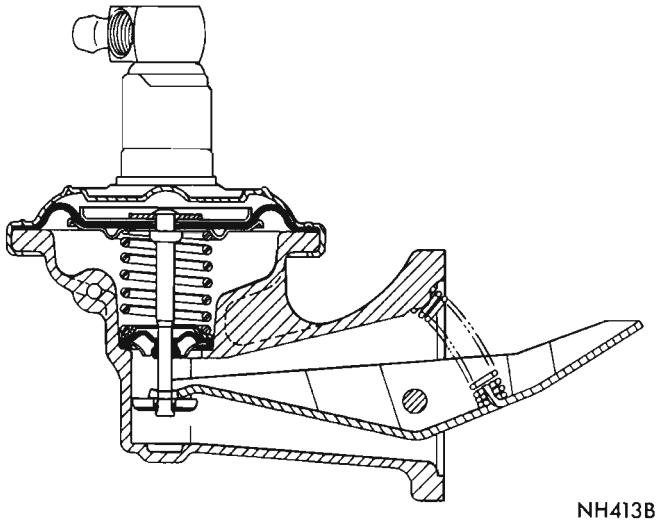

NH413B

Fig. 1—Fuel Pump Assembly (170-225 Cu. In. Engine)

action lifts the pull rod and diaphragm upwards against the fuel pump main spring, thus creating a vacuum in the valve housing and opens the inlet valve and fuel is drawn into the valve housing chamber. On the return stroke the main spring forces the diaphragm to the **down** position, which closes the inlet valve and expels the fuel in the valve housing chamber through the outlet valve, to the fuel filter and the carburetor.

The fuel filter should be changed every 24,000 miles, to insure having an unrestricted flow of fuel at all times. **Do not attempt to clean.**

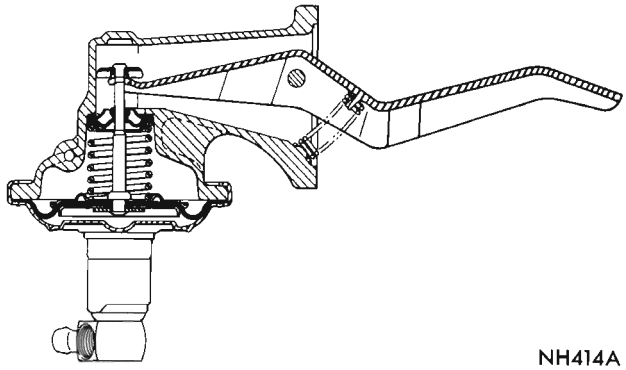

NH414A

Fig. 2—Fuel Pump Assembly (318 Cu. In. Engine)

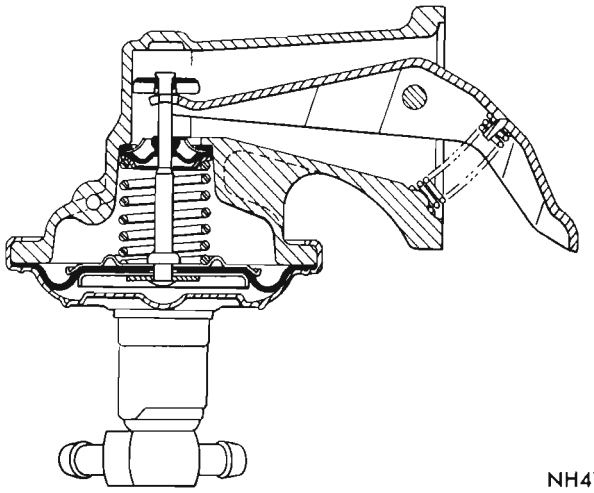

NH415A

Fig. 3—Fuel Pump Assembly (383 and 440 Cu. In. Engine)

SERVICE DIAGNOSIS

Condition	Possible Cause	Correction
FUEL PUMP LEAKS—FUEL	(a) Worn, ruptured or torn diaphragm.	(a) Install new pump.
	(b) Loose diaphragm mounting plates.	(b) Install new pump.
	(c) Loose inlet or outlet line fittings.	(c) Tighten line fittings.
FUEL PUMP LEAKS—OIL	(a) Cracked or deteriorated pull rod oil seal.	(a) Install new pump.
	(b) Loose rocker arm pivot pin.	(b) Install new pump.
	(c) Loose pump mounting bolts.	(c) Tighten mounting bolts securely.
	(d) Defective pump to block gasket.	(d) Install new gasket.
INSUFFICIENT FUEL DELIVERY	(a) Vent in tank restricted. (This will also cause collapsed fuel tank.)	(a) Unplug vent and inspect tank for leaks.
	(b) Leaks in fuel line or fittings.	(b) Tighten line fittings.
	(c) Dirt or restriction in fuel tank.	(c) Install new fuel filter and clean out tank.
	(d) Worn, ruptured, or torn diaphragm.	(d) Install new pump.
	(e) Frozen gas lines.	(e) Thaw lines and drain tank.
	(f) Improperly seating valves.	(f) Install new fuel pump.
	(g) Vapor lock.	(g) Install heat shield where lines or pump are near exhaust.
	(h) Low Pressure.	(h) Install new fuel pump.
	(i) Incorrect fuel pump.	(i) Install correct fuel pump.
	(j) Restricted fuel filter.	(j) Install new filter.

Condition	Possible Cause	Correction
FUEL PUMP NOISE	(a) Loose mounting bolts.	(a) Tighten mounting bolts.
	(b) Scored or worn rocker arm.	(b) Install new fuel pump.
	(c) Weak or broken rocker arm spring.	(c) Install new spring.

SERVICE PROCEDURES

TESTING FUEL PUMP (On Vehicle)

If the fuel pump fails to supply fuel properly to the carburetor, the following tests should be made before removing the fuel pump from the vehicle.

Pressure Test

(1) Insert a "T" fitting in fuel line at carburetor, (Fig. 4).

(2) Connect a 6 inch piece of hose between "T" fitting and gauge C-3411. (The hose should not exceed 6 inches. A longer hose may collect fuel and the additional weight of fuel would be added to pressure of pump and result in an inaccurate reading.)

(3) Vent pump for a few seconds (this relieves air trapped in fuel chamber). If this is not done, pump will not operate at full capacity and low pressure reading will result.

(4) Connect a tachometer, then start engine and run at 500 r.p.m. The reading should be as shown in specifications (depending on pump) and remain constant or return to zero very, very slowly when engine is stopped. An instant drop to zero indicates a leaky outlet valve. If pressure is too low a weak diaphragm main spring, or improper assembly of diaphragm may be cause. If pressure is too high, main spring is too strong.

Vacuum Test

The vacuum test should be made with the fuel line disconnected from the carburetor. (This will allow the pump to operate at full capacity, which it must do to prime a dry carburetor.) The minimum reading should be at least 10 inches of vacuum at 500 r.p.m. with the fuel line disconnected at the carburetor.

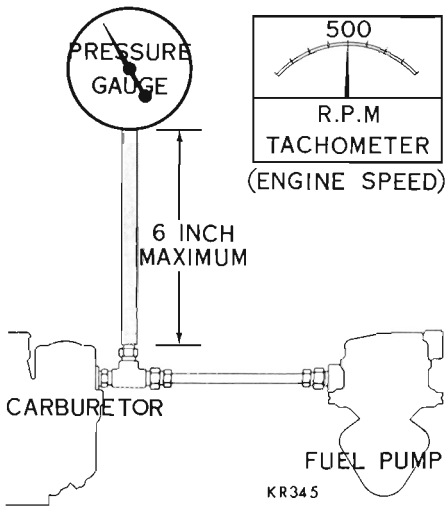

Fig. 4—Pressure Testing Fuel Pump

Volume Test

The fuel pump should supply 1 quart of fuel in 1 minute or less at 500 r.p.m.

Inlet Valve Test

To test the inlet valve, connect a vacuum gauge on the inlet fitting while the line is disconnected.

(1) Start engine or turn over with starting motor.

(2) There should be a noticeable vacuum present, not alternated by blowback.

(3) If blowback is present, inlet valve is not seating properly and a new pump should be installed.

If fuel pump does not perform to above test requirements, fuel pump should be removed from the vehicle.

DISASSEMBLING FUEL PUMP (MS-4024S)

Before disassembling the fuel pump, mark the housings in such a manner that the "inlet" will be facing the inlet fuel line when reassembled. This is important!

(1) Remove the pivot pin plug, using Tool T109-43 (Fig. 5).

(2) Disengage the rocker arm follower spring from the rocker arm and rocker arm housing.

(3) Turn the pump on its side (pivot pin hole down) and rap gently to remove the pivot pin.

(4) Disengage the rocker arm from the diaphragm pull rod, by sliding rocker arm out of housing.

(5) Remove the screws that attach the valve body to the rocker arm housing. Separate the valve body and rocker arm housings, and lift out the diaphragm and pull rod assembly.

(6) Remove the screws that attach the valve body to the valve housing cover. Separate cover and valve body and remove the outlet air dome diaphragm.

Cleaning Fuel Pump Parts

Clean all fuel pump parts (except diaphragm) in a suitable solvent, then blow dry with compressed air. Check the condition of the valve seats and parts for gum deposits. If gum deposits are found, remove with denatured alcohol. If the valves are badly worn or damaged, install a complete new valve body as-

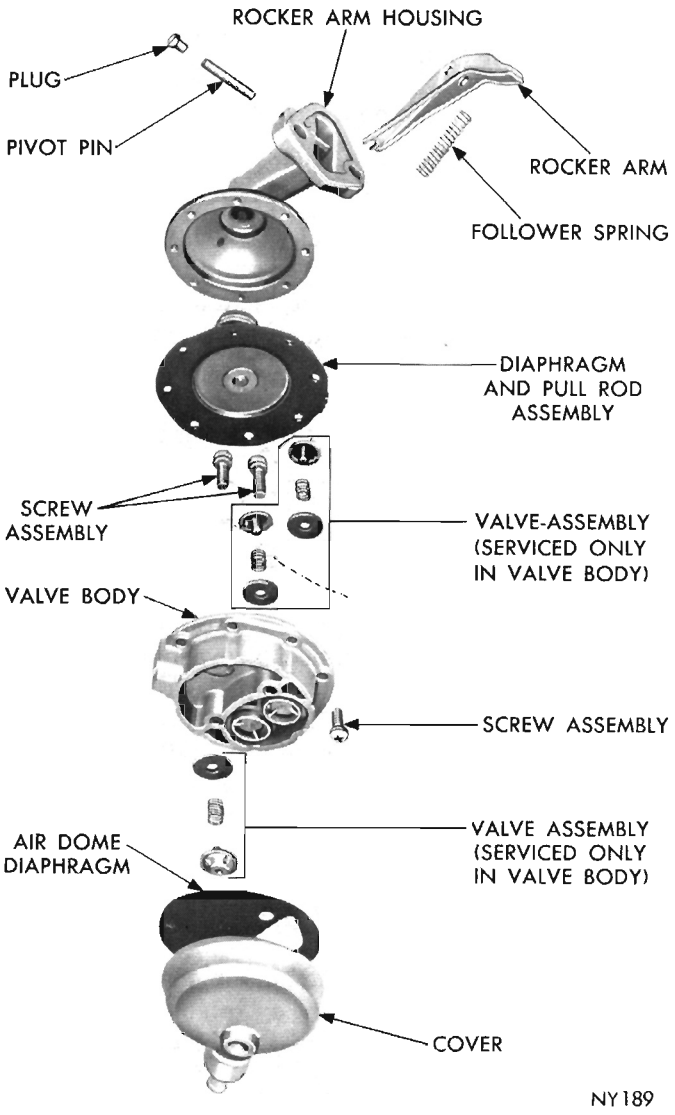

Fig. 5—Fuel Pump (Exploded View) MS-4024S (Hemi Engine)

sembly. **The valves are not serviced individually.**

Examine the diaphragm for cracks, torn screw holes or ruptures. Check the rubber oil seal on the end of the pull rod for deterioration. Check the outlet air dome diaphragm for cracks or deterioration. Check the rocker arm for scoring or galling on the camshaft push rod bearing surface.

ASSEMBLING FUEL PUMP (Fig. 5)

(1) Place the air dome diaphragm in position on the valve body.

(2) Align the scribe marks on the cover and the valve body, then install attaching screws. Tighten securely.

(3) Slide the diaphragm pull rod up into the rocker arm housing. Place the valve body in position on the diaphragm with the scribe marks aligned. (Be sure the holes in the diaphragm, rocker arm housing and valve bodies are aligned). Compress the unit together, then install the attaching screws, but **do not tighten. Never use shellac or any other adhesive on the diaphragm.**

(4) Slide the rocker arm into the housing and engage the diaphragm pull rod. Align the pivot pin holes in the arm with those in the housing, then install pivot pin. Install new plug and drive in securely.

(5) Install the rocker arm follower spring over the tab on the rocker arm and over dimple in the housing.

(6) Place the pump in a vise (with protector jaws) then push on the rocker arm until full travel is reached. Hold in this position, while tightening the attaching screws. This will prevent tearing of the diaphragm when the pump is in operation with the pump arm in its full stroke.

(7) Test the fuel pump as described previously.

DISASSEMBLING FUEL PUMP (RD-267A)

Before disassembly, mark housings in such manner that the mark "Inlet" will be facing inlet fuel line when reassembled. This is important!

(1) Grind or file off peened end of pivot pin, then, drive out pivot pin. Remove washer.

(2) Remove rocker arm follower spring.

(3) Remove screws holding rocker arm housing to valve body. Separate body and housing.

(4) Press **in** on diaphragm and disengage rocker arm from diaphragm pull rod. Remove rocker arm and spacer washers.

(5) Slide diaphragm and spring out of rocker arm housing.

(6) Remove sleeve from two piece rocker arm, then separate rocker arm pull lever from eccentric arm.

Cleaning Fuel Pump Parts

Clean all fuel pump parts (except diaphragm) in a

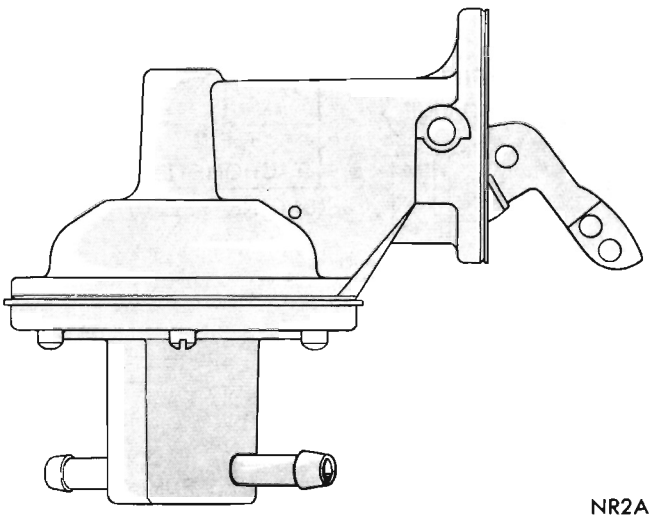

Fig. 6—Fuel Pump Assembly (RD-267A) 383 and 440 Cu. In. Engine

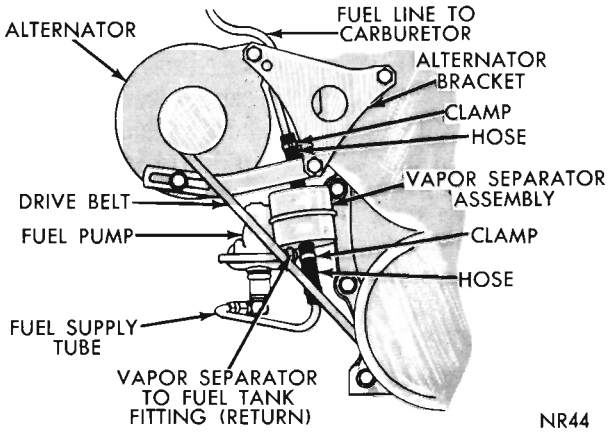

Fig. 7—Fuel Vapor Separator Mounting (440 Cu. In. Engine)

suitable solvent, then blow dry with compressed air. Check the condition of the valve seats and parts for gum deposits. If gum deposits are found, remove with denatured alcohol. If the valves are badly worn or damaged, install a complete new valve body assembly. **The valves are not serviced individually.** Examine the diaphragm for cracks, torn screw holes or ruptures. Check the rubber oil seal (diaphragm pull rod) in housing for deterioration. If unfit for further service, install a new rocker arm housing. Check the rocker arm for scoring or galling on the camshaft push rod bearing surface.

ASSEMBLING FUEL PUMP

(1) Assemble rocker arm by sliding the pull arm into eccentric cam and install sleeve. (Be sure the hook on the arm is facing up).

(2) Grease spacer washers and slide over each side of sleeve shoulder.

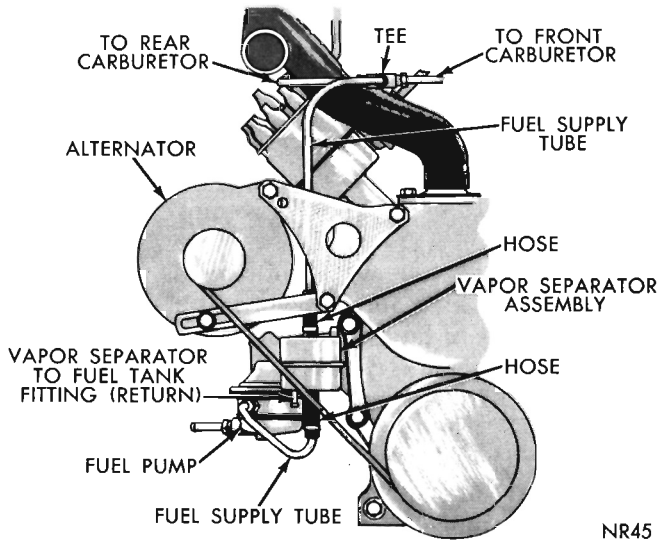

Fig. 8—Fuel Vapor Separator Mounting (426 Hemi Engine)

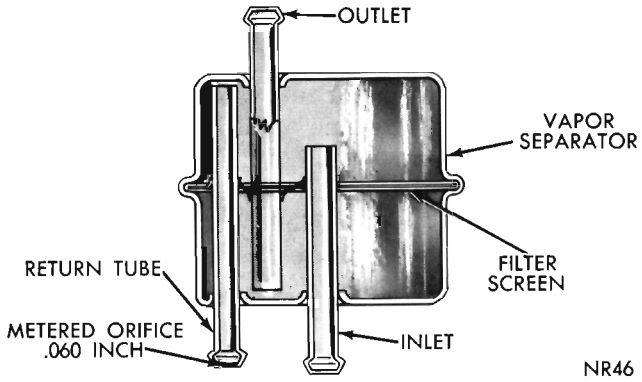

Fig. 9—Fuel Vapor Separator (Sectional View)

(3) Install diaphragm and spring in rocker arm housing.

(4) Slide rocker arm in position and engage hook of arm with slot in pull rod. (Compress diaphragm and spring to engage arm with pull rod.)

(5) Using suitable drift, align rocker arm and washers then install pivot pin. Install retaining washer, then peen pivot pin to retain.

(6) Place valve body on diaphragm. Align, then install attaching screws. Draw down evenly.

(7) With pump held in vise, compress rocker arm to its full travel. Hold in this position, then tighten screws securely. (This will prevent tearing diaphragm when pump is operated at full stroke.)

(8) Install pump arm follower spring between rocker arm and housing. (Be sure spring is seated.)

(9) Test pump as described previously.

FUEL VAPOR SEPARATOR

The fuel vapor separator (Figs. 7, 8 and 9), is used on the 440 cu. in. High Performance engine and the 426 Hemi engine to prevent vapor lock.

The vapor separator is located between the fuel pump and carburetor, depending on model (Figs. 7 or 8) on the right side (front) of the engine. The separator is serviced as an assembly only and consists of a sealed can, a filter screen, an inlet and outlet fitting and a metered orifice outlet fitting for the return line to the fuel tank (Fig. 9).

Fuel is drawn from the fuel tank by the fuel pump, through the supply line, into the pump and thence to the vapor separator unit, until the unit is filled with fuel. The outlet tube picks up fuel from the bottom of the separator unit and flows into the carburetor for distribution to the engine. Any fuel vapor (caused by excessive heat) that has gathered in the indrawn fuel rises to the top of the separator unit and is forced out of the metered fitting into the return line to the tank for condensation to liquid fuel.

As previously mentioned, the vapor separator unit is serviced only as an assembly. Check to see if the

unit is installed correctly (with the **inlet** fitting and **return** fitting at the bottom, and the **outlet** fitting at the top.

To check the unit for a restricted or plugged screen, disconnect fuel line at carburetor, then with a container placed under end of line, turn engine over with starting motor. Check the quantity of fuel pumped through the unit. This should be 1 quart of fuel in 1 minute, at 550 r.p.m.

If vapor lock is evident, remove the return hose and check to see if the metered orifice is open. If clogged, bend a paper clip and insert through restricted orifice to clear. If necessary, use air pressure to clear return line to fuel tank, after removing filler cap.

FUEL TANK

INDEX

	Page
General Information	74
Installing Fuel Tank	75 & 79
Installing Fuel Tank (Station Wagon)	76 & 80
Removing Fuel Tank	74 & 78
Removing Fuel Tank (Station Wagon)	75 & 79

GENERAL INFORMATION

The fuel tank on the conventional models (108" wheelbase) is located at the rear of the body, under the trunk compartment floor, (Figs. 1 or 2). The filler tube is located in the left rear quarter panel.

The fuel tank on all models (115.8" and 116.5" wheelbase Station Wagons) is located at the rear of the body under the trunk compartment floor, (Fig. 3).

If a car is to be stored for any appreciable length of time, the gasoline should be drained from the entire system in order to prevent gum formation. If the vehicle has been undercoated, be sure the tank vent tube is open. If this vent is plugged, a collapsed fuel tank will result.

The fuel tank on all 108" wheelbase models has an 18 gallon capacity (Imperial 15). The fuel tank on all conventional 115.8" W/B cars and 116.5" Station Wagons have a 19 gallon capacity (Imperial 15-3/4). The fuel tank is fitted with a gauge unit, including the suction pipe, (Fig. 7). The filter on the end of the suction pipe is a replaceable unit and prevents the entry of water or foreign material. When installing a tank unit, be sure the filter is pushed down on the pipe until seated.

The fuel tank on all 119.5 inch wheelbase Fury models is located at the rear of the body, under the trunk compartment floor, (Fig. 5). In the station wagon models, the fuel tank is mounted in the left rear quarter panel beyond the wheel house, (Fig. 6).

The fuel tank on all 119.5 inch wheelbase Fury models has a 24 gallon capacity (Imperial 20). The Fury 121.5 inch W/B station wagon capacity is 22 gallons (Imperial 18-1/4). The filler tube on the conventional models is accessible through the center of the deck opening lower panel, while the station wagon fills at the left rear upper quarter panel. The fuel tank is fitted with a gauge unit, including the suction pipe, (Fig. 7). The filter on the end of the suction pipe is a replaceable unit and prevents the entry of water or dirt. When installing a gauge unit, be sure the filter is pushed on the end of the tube until seated.

SERVICE PROCEDURES

REMOVING FUEL TANK—108" W/B SEDANS (Figs. 1 or 2)

(1) Drain fuel tank dry by disconnecting fuel line at pump and then connect a siphon tube. Collect drained fuel in a suitable container. Disconnect fuel line ground strap and wire lead to gauge unit. (Front center near top of tank) (Fig. 8).

(2) Disconnect vent tube from filler tube at connector.

(3) Remove screws that hold filler tube and gasket, to rear quarter panel.

(4) Remove 5 screws and washers that attach filler tube seal to floor pan, then remove end of vent tube from seal.

(5) Grasp filler tube with both hands, twist tube, and at the same time, force downward into tank, until end of tube clears quarter panel. Remove gasket. (If tube is frozen in tank, use a rubber lubricant around joint and work into grommet, after sliding dust shield out of way.)

(6) Twist (or rotate) filler tube approximately 180 degrees, then work tube carefully out of tank and dust shield seal. Remove tube from inside of trunk compartment.

(7) Remove nut that holds tank retaining strap to

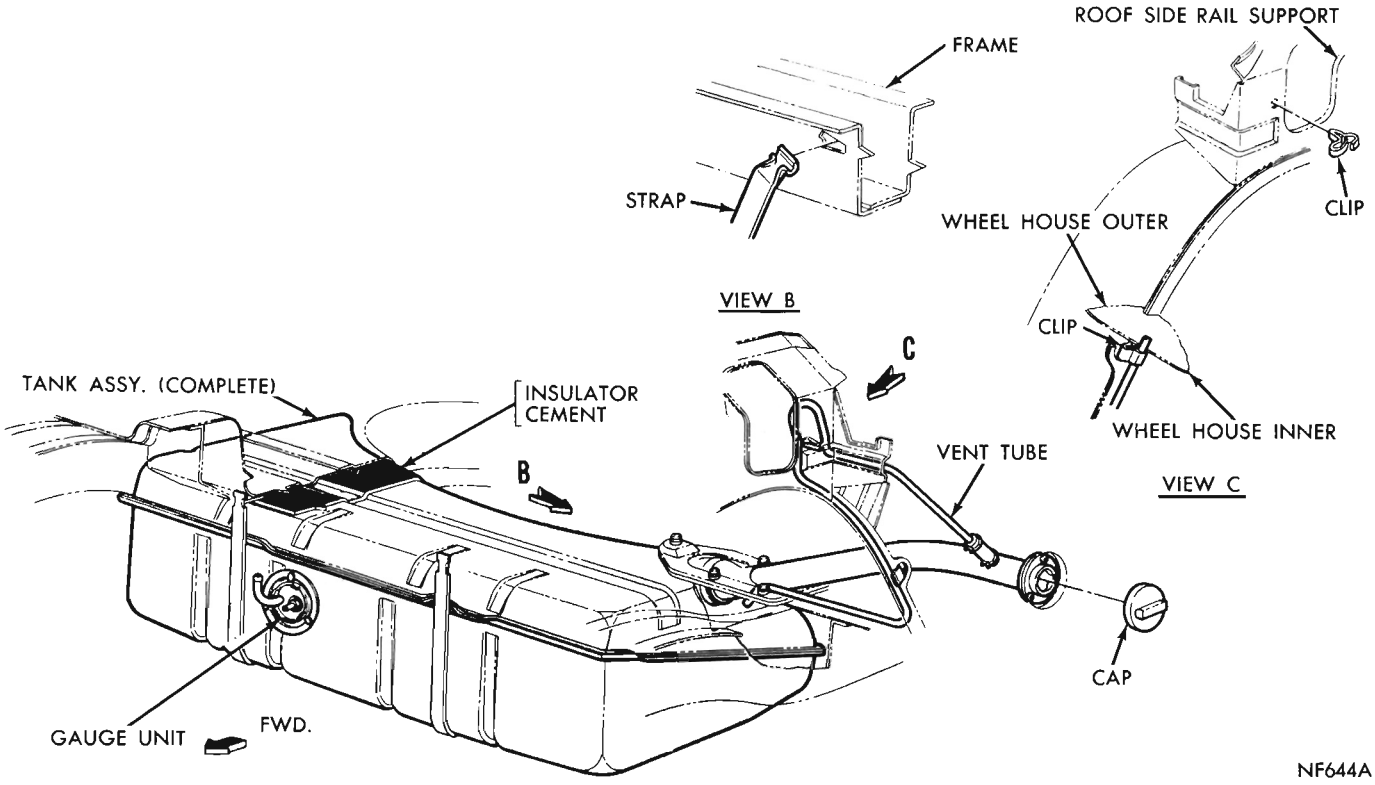

Fig. 1—Fuel Tank Assembly (108 Inch W/B Vehicles)

"J" bolt. Allow strap to drop or hang, then lower tank and remove from under car.

(8) Remove tank gauge unit, using spanner wrench C-3582. Slide gauge assembly out of fuel tank. Discard gasket.

(9) If necessary check operation of the fuel gauge, as described in the Electrical Section of the Manual.

INSTALLING FUEL TANK—108" W/B SEDANS (Fig. 1)

Before installing the fuel gauge, check the condition of the filter on the end of the suction tube. If the filter is plugged, install a new filter.

(1) Install a new rubber grommet in tank. Insert a new gasket in fuel gauge opening recess then slide gauge into tank. Align the positioning tangs on gauge with those in tank. Install lockring, then tighten securely, using Tool C-3582. (If tank insulator was torn or damaged during removal of tank, be sure and install a new insulator at reassembly.)

(2) Locate insulation pad on top of tank. Slide tank under car and up in position. Hold in position, then raise retaining straps and thread onto "J" bolts. Install nut, and tighten. (Not over 50 inch-pounds.)

(3) Lubricate rubber grommet using a suitable rubber lubricant, then slide filler tube down through dust seal and into tank, far enough to clear quarter panel. Twist (or rotate) filler tube 180 degrees and align with opening in quarter panel. Install a new gasket over end of tube, then slowly withdraw tube from tank and into position against quarter panel. Align attaching screw holes; install screws and tighten securely. Slide vent tube through seal.

(4) If dust seal was disturbed during removal operation, realign and tighten attaching screws securely.

(5) Reconnect vent tube to filler tube connector.

(6) Reconnect fuel supply line, ground strap and wire lead to gauge (Fig. 8).

(7) Refill tank and check for leaks.

REMOVING FUEL TANK—115.8" and 116.5" W/B MODELS

Station Wagons (Fig. 3)

(1) Disconnect rubber elbows from inner filler tube and intermediate filling vent tube.

(2) Remove bolts from intermediate vent tube and inner filler tube attaching brackets to frame members.

(3) Remove inner filler tube fron tank.

(4) Cut Keystone clamp from rubber elbow connection between inner and intermediate filling vent tube and disconnect.

(5) Disconnect fuel gauge sending unit lead wire, ground strap and fuel line (Fig. 8).

(6) Remove "J" bolts and straps.

(7) Lower tank and remove from under vehicle.

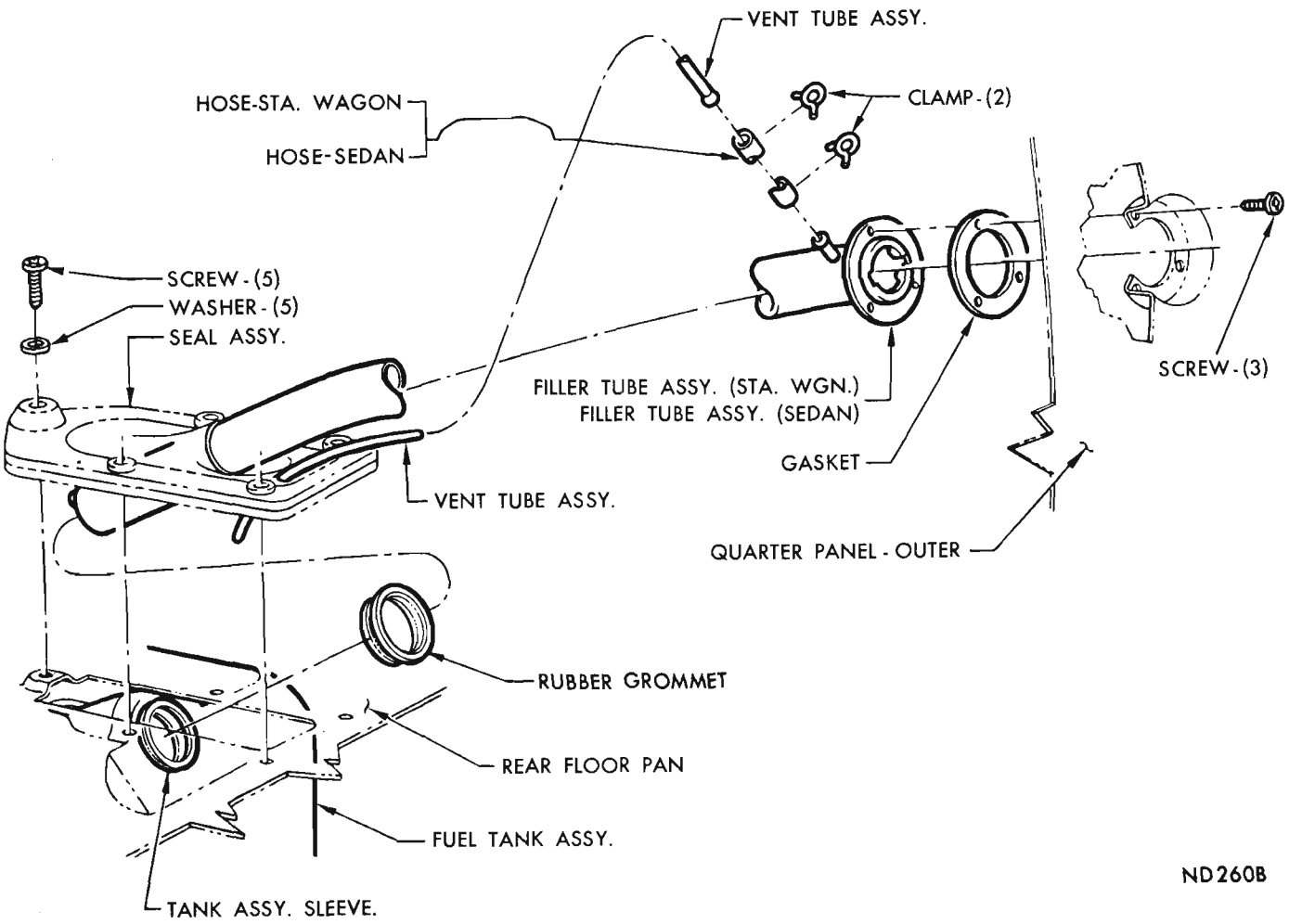

Fig. 2—Filler Tube Assembly (108 Inch W/B Vehicles)

Sedans

CAUTION: Be sure the ignition switch is turned off before disconnecting or connecting the gauge wire.

(1) Drain tank into a safety can, then disconnect fuel line and wire lead to gauge unit (Fig. 8).

(2) Disconnect vent tubes at hose connection at leading edge of tank (Fig. 4).

(3) Remove screw that attaches filler tube bracket to rear crossmember.

(4) Remove nuts that hold ends of fuel tank hold down straps to frame. Lower front end of tank far enough to disengage filler tube from rear panel and slide out from under vehicle.

(5) Remove tank gauge unit, using spanner wrench Tool C-3582 (Fig. 7). Check rubber grommet around filler tube. If cracked or deteriorated, install a new grommet at reassembly.

FUEL TANK INSTALLATION—115.8" and 116.5" W/B MODELS

Station Wagons (Fig. 3)

(1) Install "T" end of straps in slots.

(2) Install rubber elbow on filler vent tube. Securely fasten new Keystone clamp to avoid leaks. (If tank insulator was torn or damaged during removal of tank, be sure and install a new insulator at reassembly.)

(3) Locate insulation pad on top of tank. Raise tank into position, install "J" bolts and tighten to 40 inch-pounds.

(4) Slide Keystone clamp on rubber elbow and insert intermediate filler vent tube through longitudinal into rubber elbow. Securely fasten Keystone clamp (using special tool).

(5) Lubricate rubber grommet with lubriplate and install inner filler tube.

(6) Lubricate rubber elbows and slide intermediate vent tube and inner filler tube into elbows. (Be sure clamps are installed on tube before installing.) Fasten Keystone clamp to intermediate vent tube elbow and Keystone clamp to outer filler tube elbow securely to avoid leaks.

Sedans (Fig. 4)

Before installing the tank gauge unit, check the condition of the filter on the end of suction tube. If

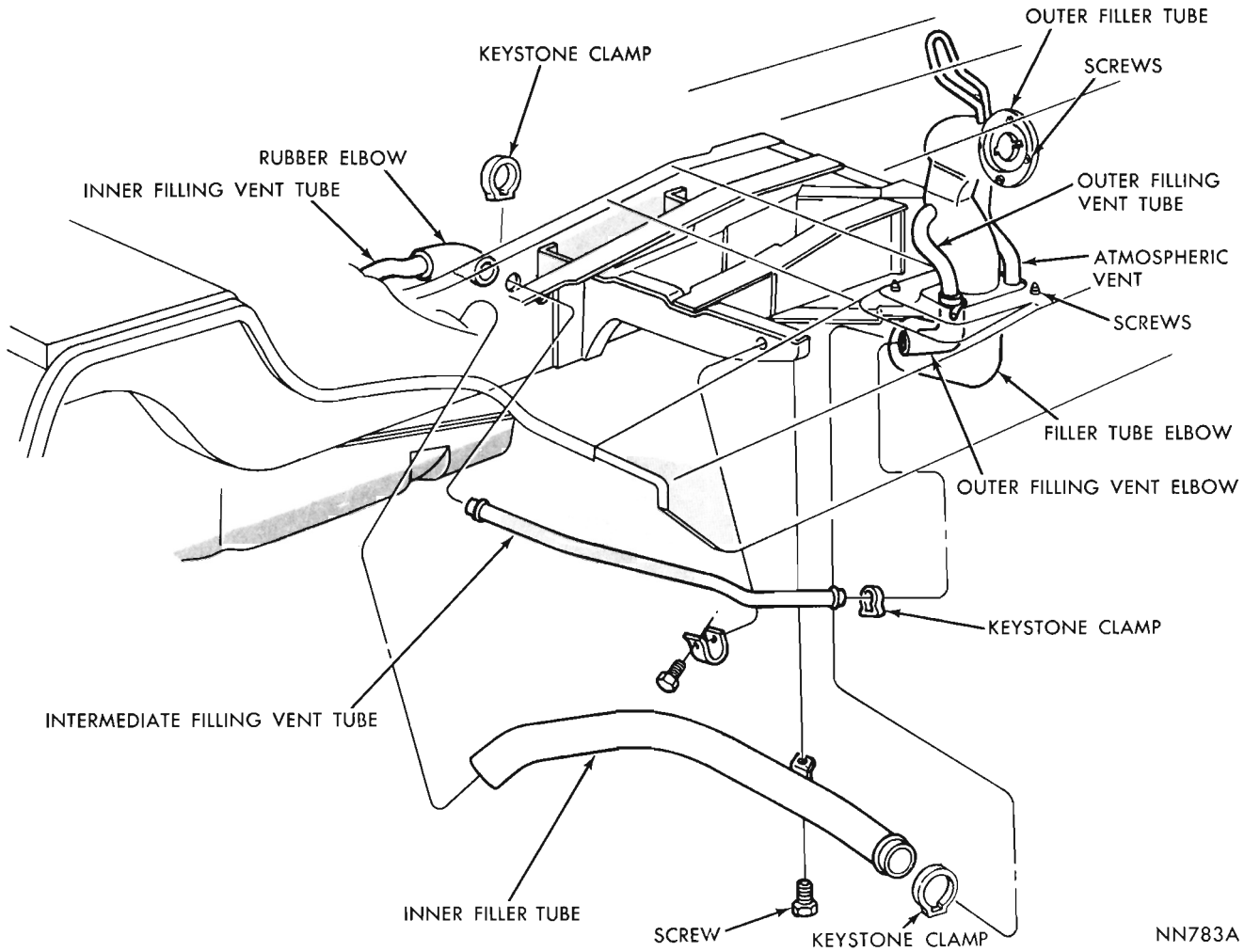

Fig. 3—Fuel Tank Assembly (116.5 inch W/B Vehicles) Station Wagons

the filter is plugged, plastic will not corrode, install a new filter (Fig. 7).

(1) Position fuel tank gauge unit in tank, using a new gasket. Tighten securely, using Tool C-3582. (If tank insulator was torn or damaged during removal of tank, be sure and install a new insulator at reassembly).

(2) Slide fuel tank under vehicle. Raise tank far enough to engage filler spout with opening in rear panel, and locator embossments on floor pan.

(3) Push tank toward rear to fully engage filler spout in opening.

(4) Hold fuel tank in this position, and place hold down straps in position, feeding attaching studs through holes in end of straps. Install nuts but do not tighten.

(5) Guide button head of studs into slots in frame and down into position. Tighten hold down strap attaching nuts securely (40 in-lbs).

(6) Install filler tube mounting screw and tighten securely.

(7) Connect vent tubes and hose connections at leading edge of tank.

(8) Connect lead wire to tank gauge unit, reconnect fuel line and ground strap (Fig. 8).

(9) Refill tank and check for leaks.

REMOVING THE OUTER FILLER TUBE—115.8" and 116.5" W/B MODELS

Station Wagons

(1) Disconnect rubber elbows from inner filler tube and intermediate filler vent tube.

(2) Remove quarter panel to filler tube attaching screws.

(3) Remove floor pan to filler tube rubber end attaching screws.

(4) Remove outer filler tube from underneath vehicle.

INSTALLING THE FILLER TUBE—115.8" and 116.5" W/B MODELS

Station Wagons (Fig. 3)

(1) Slide rubber floor pan to outer filler tube seal

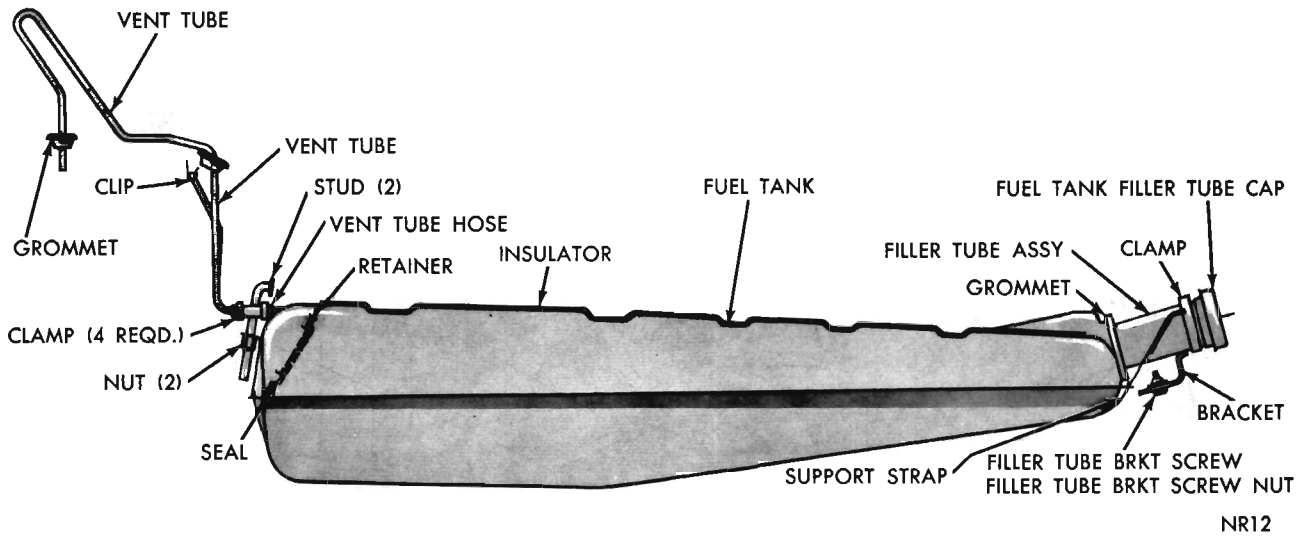

Fig. 4—Fuel Tank Asembly (115.8 inch W/B Vehicles) Sedans

on outer filler tube, outer filler vent tube, and atmospheric vent tube.

(2) Position Keystone clamp on outer filler tube, new Keystone clamp on outer filler vent tube, slide rubber elbows on tubes, and fasten clamps securely to avoid leaks.

(3) On station wagons, outer filler tube and rubber elbow assembly should be installed from underneath through floor pan, install attaching screws and tighten securely.

REMOVING GAUGE UNIT (Sedans) 119.5" W/B MODELS

The vehicle should be lifted with a frame type hoist to let the rear axle fall away from the body. Remove tank unit, using Spanner wrench Tool C-3582.

REMOVING FUEL TANK (Sedans) 119.5" W/B MODELS (Fig. 5)

CAUTION: Be sure the Ignition Switch is turned OFF before disconnecting or connecting the gauge wire.

(1) Drain tank into a safety can, then disconnect fuel line, ground strap and wire lead to gauge unit.

(2) Disconnect vent tube at hose connection at leading edge of tank.

(3) Remove screw that attaches filler tube bracket to rear crossmember.

(4) Remove nuts that hold ends of fuel tank hold down straps to frame. Lower front end of tank far enough to disengage filler tube from rear panel and slide out from under vehicle.

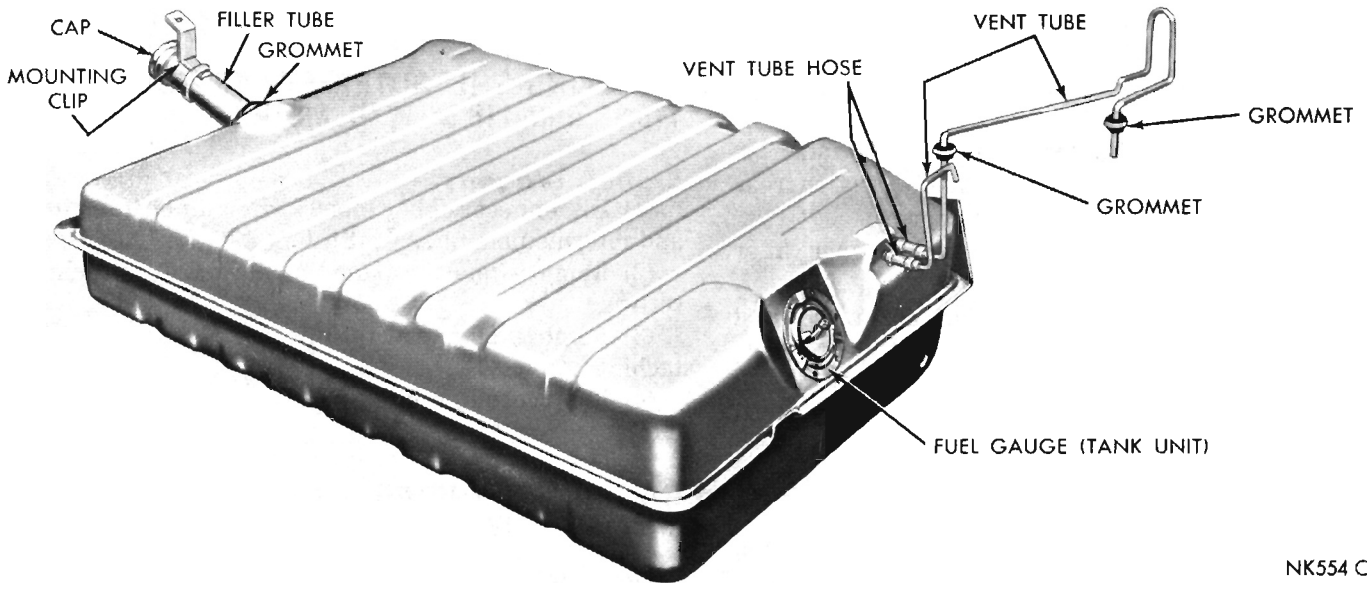

Fig. 5—Fuel Tank Mounting (119.5 inch W/B Vehicles)

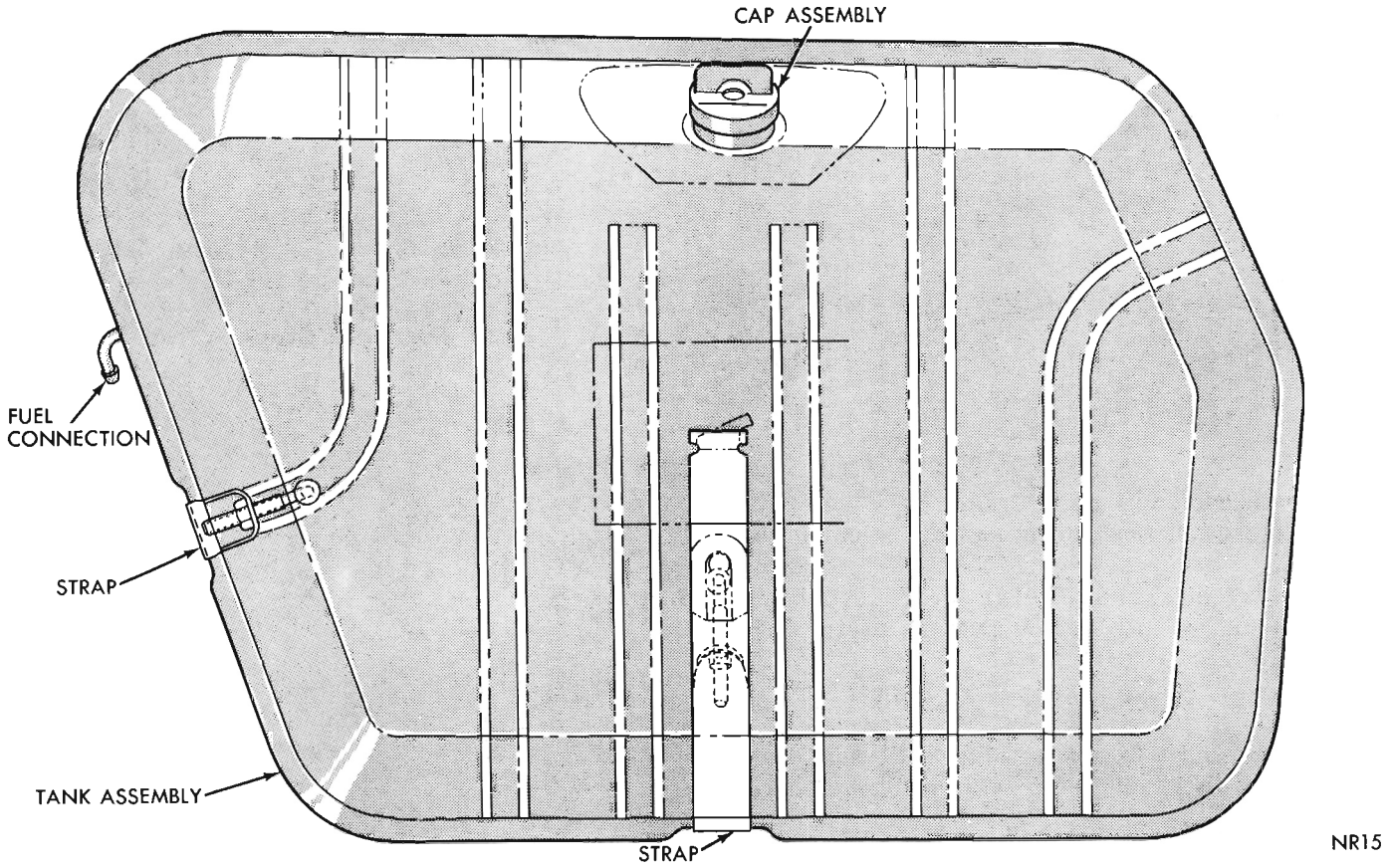

Fig. 6—Fuel Tank Assembly (121.5 inch W/B Vehicles)

(5) Remove tank gauge unit, using spanner wrench Tool C-3582. Check rubber grommet around filler tube. If cracked or deteriorated, install a new grommet at reassembly.

INSTALLING FUEL TANK (Sedans) 119.5" W/B MODELS (Fig. 5)

Before installing the fuel gauge, check the condition of the filter on the end of the suction tube. If the filter is plugged, install a new filter.

CAUTION: Be sure the Ignition Switch is turned OFF before disconnecting or connecting the gauge wire.

(1) Position fuel tank gauge unit in tank, using a new gasket. Tighten securely, using Tool C-3582. (If tank insulator was torn or damaged during removal of tank, be sure and install a new insulator at reassembly.)

(2) Slide fuel tank under vehicle. Raise tank far enough to engage filler spout with opening in rear panel, and locator embossments on floor pan.

(3) Push tank toward rear to fully engage filler spout in opening.

(4) Hold fuel tank in this position, and place hold down straps in position, feeding attaching studs through holes in end of straps. Install nuts but do not tighten.

(5) Guide button head of studs into slots in frame and down into position. Tighten hold down strap attaching nuts securely to 50 inch-pounds.

(6) Install filler tube mounting screw and tighten securely.

(7) Connect vent tubes and hose connections at leading edge of tank.

(8) Connect lead wire to tank gauge unit, reconnect fuel line and ground strap (Fig. 8).

(9) Refill tank and check for leaks.

REMOVING FUEL TANK (Station Wagon) 121.5" W/B MODELS (Fig. 6)

(1) Remove filler cap and syphon fuel into safety can.

(2) Raise vehicle on hoist and remove fender skirt (if so equipped).

(3) Remove left rear tire and wheel.

(4) Remove screws that attach stone shield to wheel house. Slide shield down and away from vehicle.

(5) Disconnect fuel line, ground strap and gauge wire.

(6) Place stands under frame at rear to support vehicle as hoist is lowered.

(7) Remove rear shock absorbers lower attaching nuts, then slide off lower pivot.

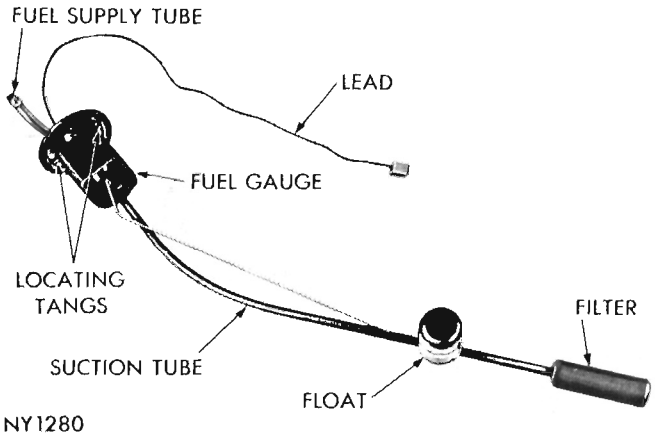

Fig. 7—Fuel Gauge (Tank Unit)

(8) Remove left rear brake drum.

(9) Remove left rear spring hanger attaching bolts to frame.

(10) Lower hoist and allow rear axle to fall away from vehicle far enough so as not to stretch brake hose.

(11) Remove fuel tank support strap nuts from "J" bolt.

(12) Slide fuel tank forward and tilt leading edge down. Work fuel tank out from under rear quarter panel.

(13) Loosen tank gauge unit, using spanner wrench Tool C-3582. Slide unit up and out of tank.

INSTALLING FUEL TANK (Station Wagon) 121.5" W/B MODELS (Fig. 6)

(1) Position fuel tank gauge unit in tank, using a new gasket. Tighten securely, using Tool C-3582.

(2) Work fuel tank up into position in quarter panel. Move rearward until filler tube is centered in opening of quarter panel. Place straps in position and install nuts. First tighten bottom strap to 50 inch-pounds, then tighten front strap to 50 inch-pounds.

(3) Install fuel line and connect ground strap and fuel gauge wire (Fig. 8).

(4) Raise hoist far enough to engage spring hanger with frame.

(5) Position left rear spring hanger at frame and install attaching bolts. Tighten to 30 foot-pounds.

(6) Slide shock absorbers over pivots and secure

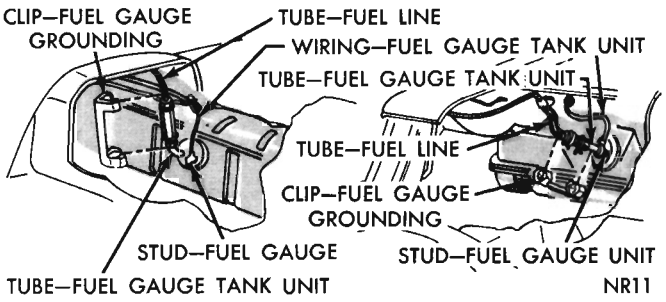

Fig. 8—Fuel Tank Ground Strap

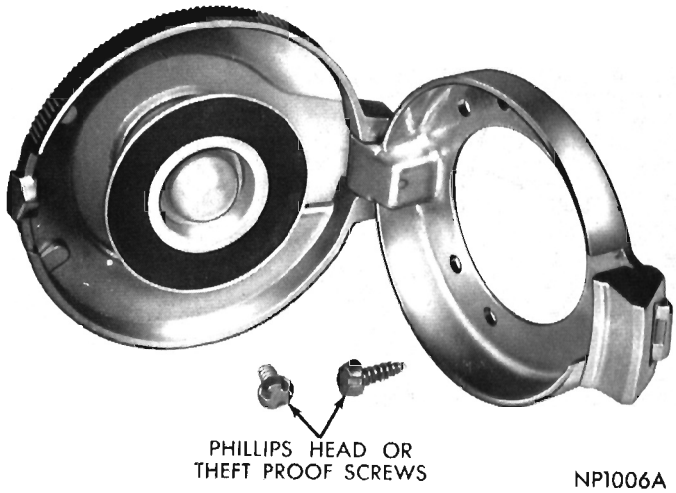

Fig. 9—Fuel Tank Filler Cap

with nuts. Tighten to 50 foot pounds.

(7) Install brake drum on axle flange.

(8) Slide stone shield up into position. Install attaching screws and tighten securely.

(9) Install wheel and tire and tighten wheel nut to 65 foot-pounds in sequence.

(10) Raise hoist and remove car stands.

(11) Install fender skirt (if so equipped) and lower vehicle to floor.

(12) Refill fuel tank and check for leaks.

(13) For testing fuel gauge (tank unit) refer to Electrical Group 8 "Gauges".

Fuel Tank Filler Cap (If so Equipped)

The fuel tank filler cap (Fig. 9) is attached to the filler pipe by theft proof or Phillips head screws.

Should it become necessary to remove cap, use special Tool C-4058.

THROTTLE LINKAGE ADJUSTMENT

Automatic Transmission

For adjustment of throttle linkage, refer to Transmission Section of this Manual.

Manual Transmission (Fig. 1) (V-8 Engines Except Hemi)

(1) Apply a thin film of multi-purpose grease on accelerator shaft where it turns in bracket, ball end and pocket at rear end of throttle cable.

(2) Disconnect choke at carburetor or block choke valve in full open position. Open throttle slightly to release fast idle cam, then return carburetor to curb idle.

(3) Loosen cable clamp nut (1), adjust position of

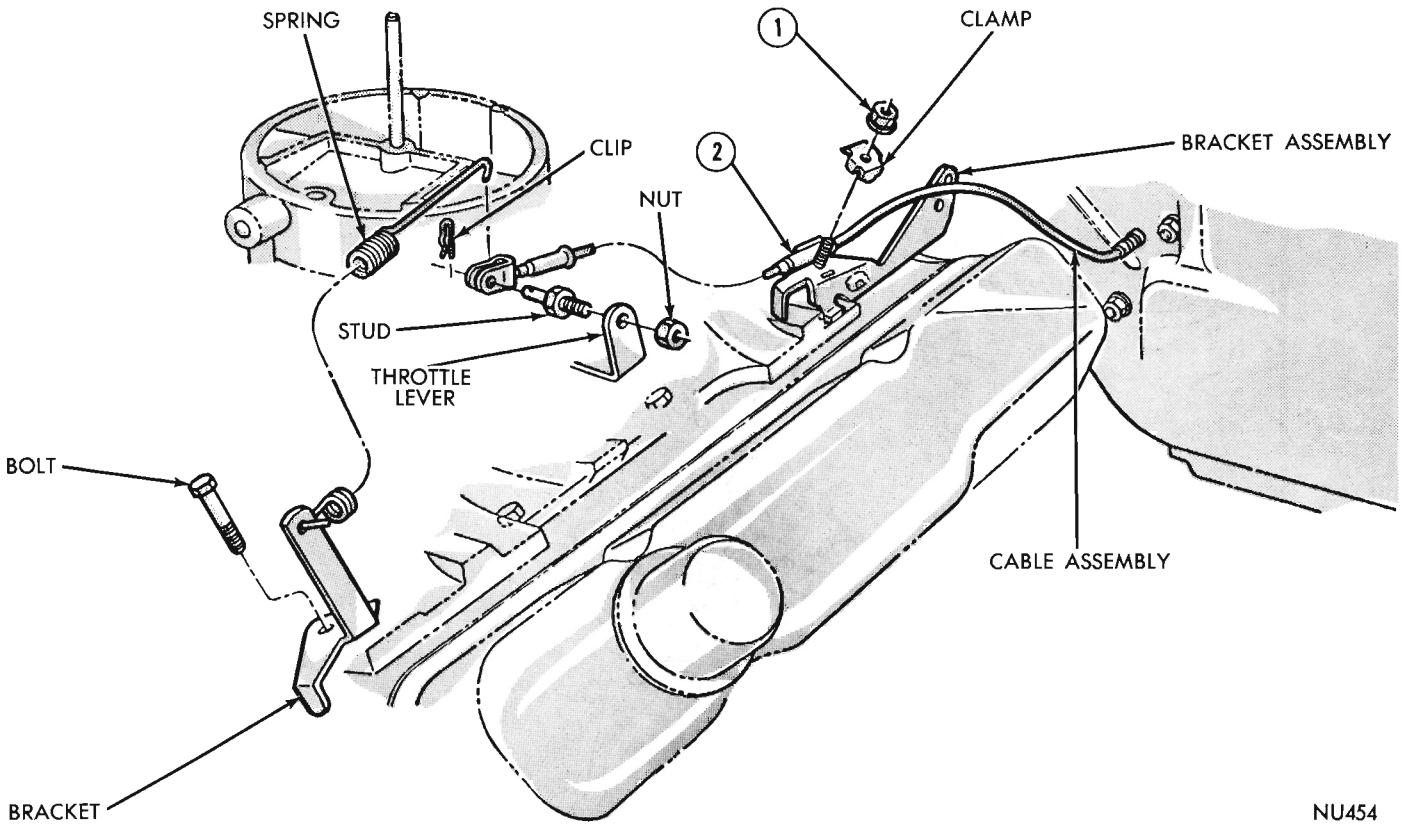

Fig. 1—Throttle Linkage Adjustment (V-8 Engines)

cable housing ferrule (2) in the clamp so that all slack is removed from cable with carburetor at curb idle. To remove slack from cable, move ferrule (2) in the clamp in direction **away** from carburetor lever.

(4) Back off ferrule (2) 1/4". This provides 1/4" cable slack at idle. Tighten cable clamp nut (1) to 45 inch-pounds.

(5) Connect choke rod or remove blocking fixture.

Manual Transmission (Fig. 2) (6 Cylinder Engines)

(1) Apply a thin film of multi-purpose grease on accelerator shaft where it turns in bracket, anti-rattle spring where it contacts shaft, ball end and pocket at rear end of throttle cable.

(2) Disconnect choke at carburetor or block choke valve in full open position. Open throttle slightly to release fast idle cam, then return carburetor to curb idle.

(3) Loosen cable clamp nut (1), adjust position of cable housing ferrule (2) in the clamp so that all slack is removed from cable with carburetor at curb idle. To remove slack from cable, move ferrule (2) in the clamp in direction **away** from carburetor lever.

(4) Back off ferrule (2) 1/4 inch to provide 1/4 inch cable slack at idle. Tighten cable clamp nut to 45 inch-pounds.

(5) Connect choke rod or remove blocking fixture.

Manual Transmission (Fig. 3) (With Hemi Engine)

(1) Apply a thin film of multi-purpose grease on accelerator shaft (5) where it turns in bracket, ball end and pocket (21) at rear end of throttle cable.

(2) Block choke valve in full open position. Open throttle slightly to release fast idle cam, then return carburetor to curb idle.

(3) Loosen cable clamp nut (12), adjust position of cable housing ferrule (13) in the clamp (14) so that all slack is removed from cable with rear carburetor at curb idle. To remove slack from cable, move ferrule (13) in the clamp (14) in direction **away** from carburetor lever.

(4) Back off ferrule (13) 1/4". This provides 1/4" cable free play. Tighten clamp nut (12) to 45 inch-pounds.

(5) Attach carburetor rod (4) assembly between the carburetors with slotted rod end (16) attached to outboard side of inboard lever on rear carburetor. With rear carburetor at wide open throttle, adjust length of connector rod (4) so that front carburetor is also at wide open throttle. To lengthen this rod (4), turn adjusting stud (17) clockwise as viewed from front of engine. Tighten lock nut (18).

(6) Remove choke valve blocking fixture.

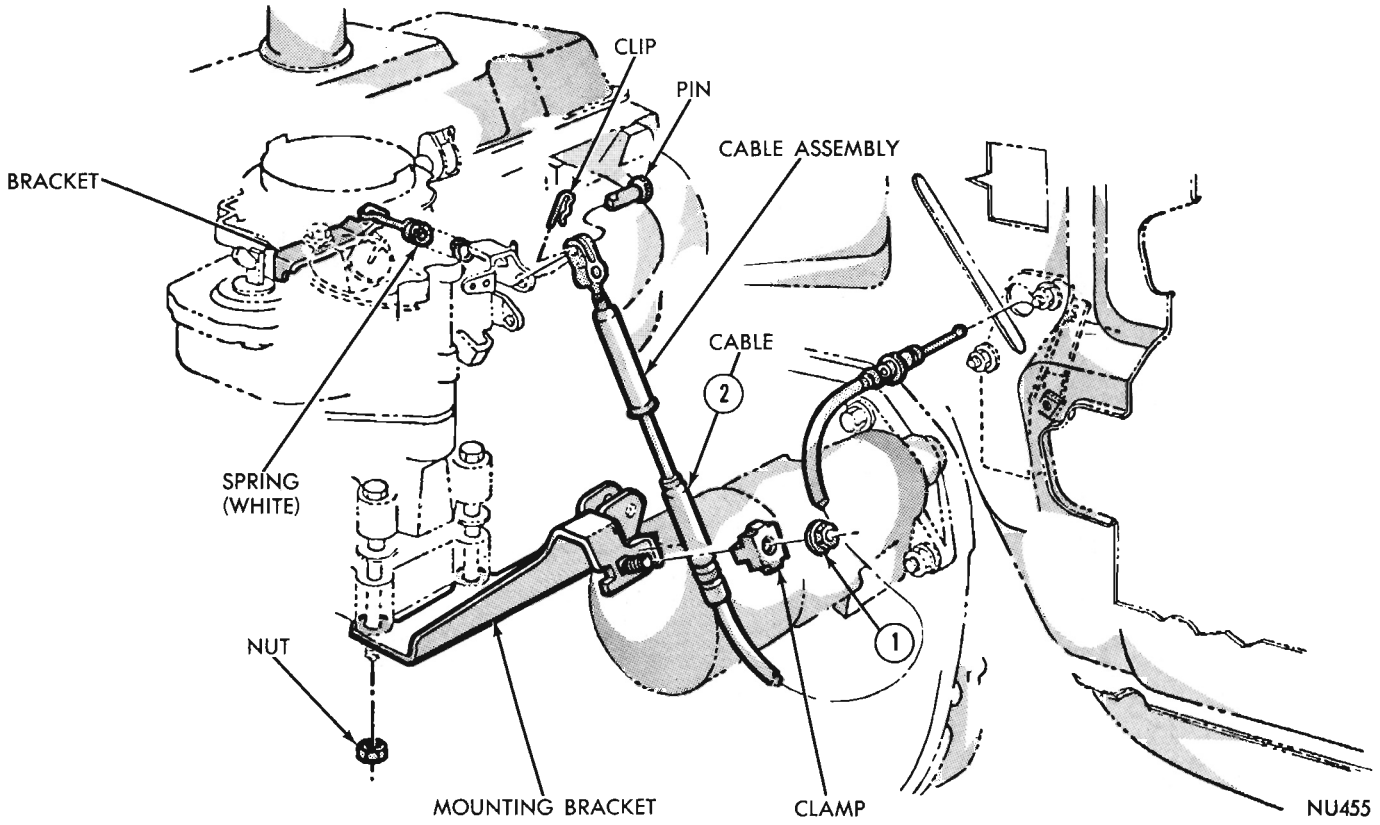

Fig. 2—Throttle Linkage Adjustment (6 Cylinder Engines)

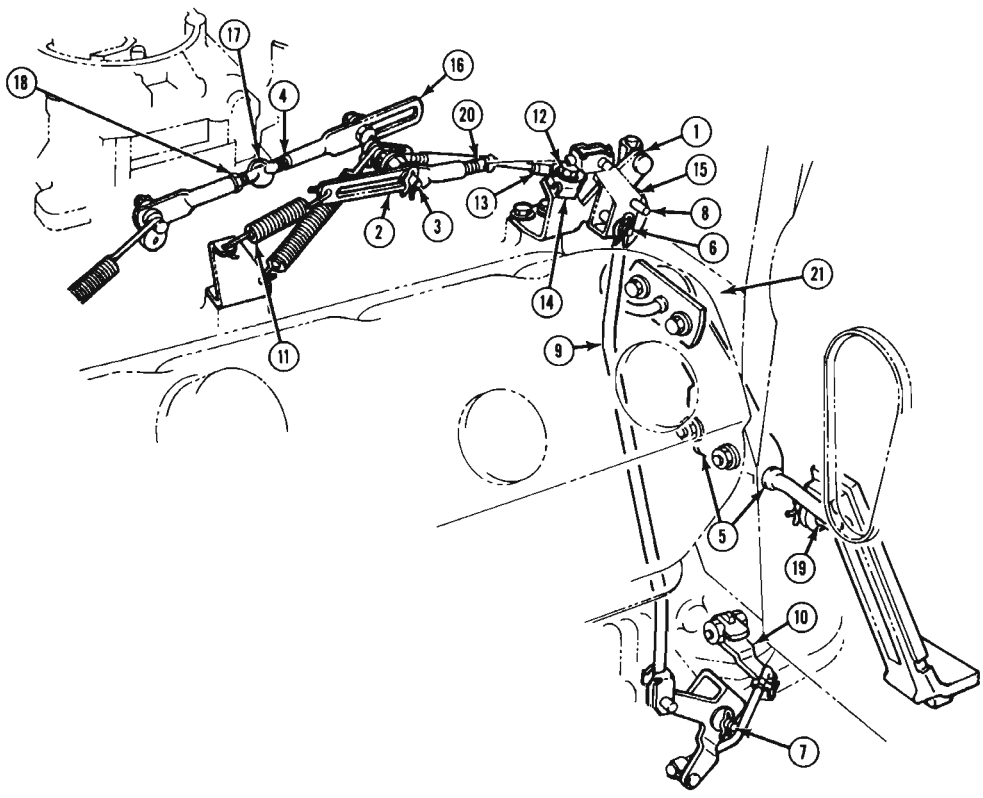

Fig. 3—Throttle Linkage Adjustment (426 Hemi Engine)

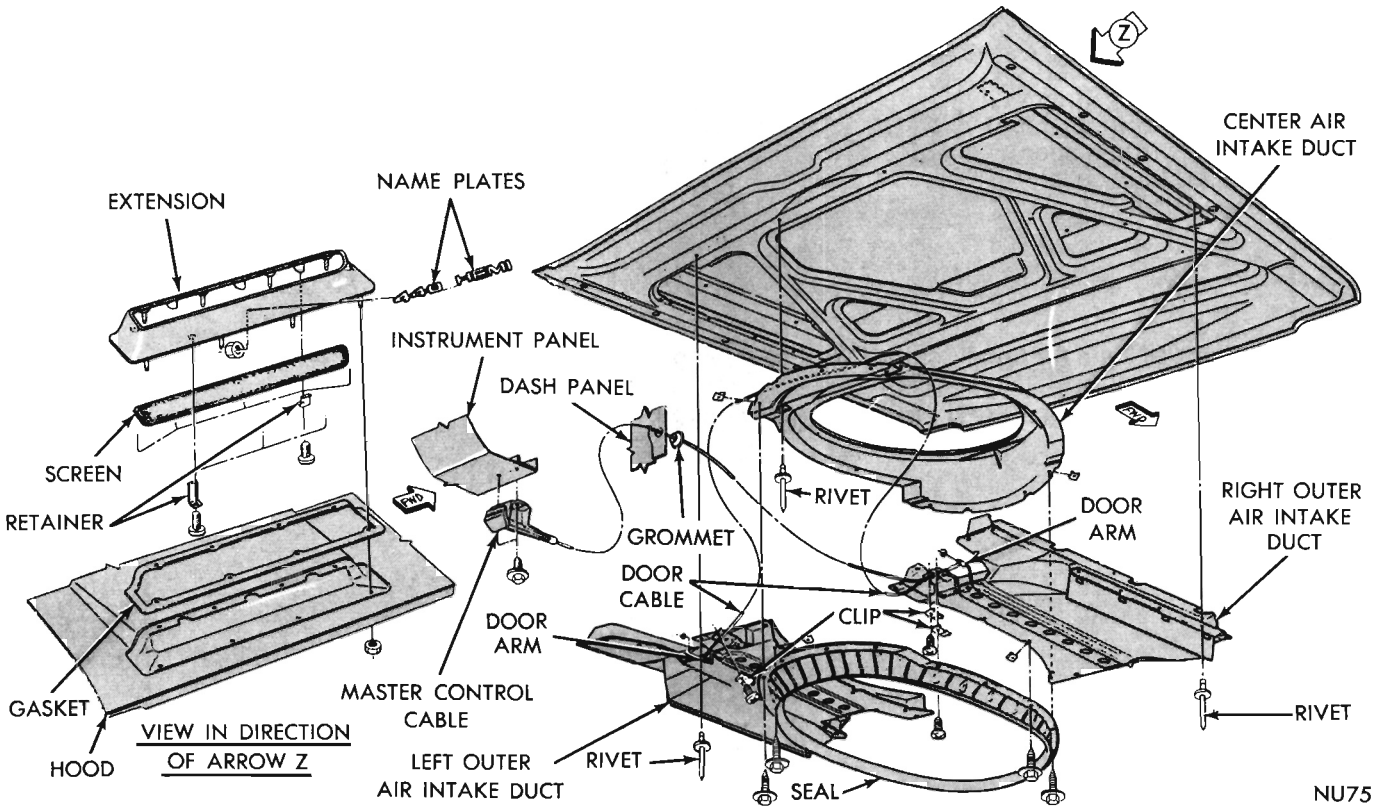

Fig. 1—Hood Fresh Air Intake System

HOOD FRESH AIR INTAKE SYSTEM (Fig. 1) (If so Equipped)

GENERAL INFORMATION

Functional hood fresh air intake extensions allow fresh air to flow directly from the outside of the engine compartment to the air cleaner. This device increases engine performance. Cable operated doors, enables the driver to close the hood openings during rainy weather or during engine warm-up period. When the fresh air intake doors are closed, warm air is admitted to the air cleaner (from the intake area) through a series of holes in the housing, (in the engine compartment.)

Fiberglass-reinforced thermosetting plastic passages, attached to the hood inner panel, extend outboard from the air cleaner to the openings at the sides of the hood. A rubber gasket forms an airtight seal between the passages and air cleaner base.

Methods of attachment of the fresh air intake system will be found in the Body Section of this Manual.

SPECIFICATIONS

BALL AND BALL SINGLE THROAT CARBURETORS

Type	Manual Trans.	Auto Trans.
Ball and Ball Single Throat		
Model	BBS-4601S	BBS-4602S
Engine Displacement (Cu. In.)	170	170
Bore	1-9/16"	1-11/16"
Venturi	1-1/4"	1-11/32"
Main Metering Jet		
Standard	#120-309S	#120-322S
One Step Lean	#120-299S	#120-326S
Two Steps Lean	#120-300S	#120-327S
Step-Up Wire (Standard)	75-1796	75-1810
Diameter	.032" x .027"	.031" x .026"
ADJUSTMENTS		
Float Setting	1/4"	1/4"

Choke Unloader	3/16"	3/16"
Fast Idle Cam Position	#48	#48
Vacuum Kick (drill size)	#35	#35
Bowl Vent Valve Setting (from under side of valve to air horn)	1/16"	1/16"
Idle Mixture Screw (turns open)	1-2	1-2
Idle Speed R.P.M. (curb idle)**	750	750
Fast Idle Speed (r.p.m.)	1600	1800
CHOKE		
Type	Well	
Control	Thermostatic Coil Spring	
Setting	2 Notches Rich	

** With Headlights ON and Air Conditioning ON (if so equipped)

HOLLEY 1920 SERIES CARBURETOR

	Taxi				
Type	Single Throat Down Draft				
Model	Holley—#1920				
Manual Trans.	R-4165A	R-4161A	—	R-4163A	—
Automatic Trans.	R-4165A	—	R-4162A	—	R-4164A
Engine Displacement (Cu. In.)	225	225	225	225	225
Bore	1-9/16"	1-11/16"	1-11/16"	1-11/16"	1-11/16"
Venturi	1-1/4"	1-5/16"	1-5/16"	1-5/16"	1-5/16"
Main Metering Jet					
Standard	50	57	56	57	56
One Step Lean	48	55	54	55	54
Two Steps Lean	46	53	52	53	52
ADJUSTMENTS					
Float Setting		Use Gauge		Use Gauge	
Fluid Level Height (Wet)	27/32"	27/32"	27/32"	27/32"	27/32"
Vacuum Kick (Drill Size)	#39	#39	#50	#39	#50
Cam Position Adjustment (Drill Size)	#52	#52	#52	#52	#52
Choke Unloader (See Fast Idle Cam Pos. Adj.)	9/32"	9/32"	9/32"	9/32"	9/32"
Bowl Vent Valve	3/32"	3/32"	3/32"	3/32"	3/32"
Idle Mixture Screw (turns open) Approx.	2	2	2	2	2
Idle Speed (Curb Idle rpm)	650*	700*	650*	700*	650*
Fast Idle Speed (Engine Hot and Screw on 2nd Highest Step of Cam rpm)					
Manual Trans.	1700	1600	—	1600	—
Automatic Trans.	1700	—	1800	—	1800
CHOKE					
Type		Well		Well	
Control		Thermostatic Coil Spring			
Setting		2 Notches Rich		2 Notches Rich	

* With Headlights ON

BALL AND BALL 1-1/4 INCH CARBURETOR

Type	Ball and Ball Dual Downdraft		Ball and Ball Dual Downdraft	
Engine Displacement	273 Cu. In.		318 Cu. In.	
Manual Transmission	BBD-4605S	—	BBD-4607S	—
Automatic Transmission	—	BBD-4606S	—	BBD-4608S
Bore	1-7/16"	1-7/16"	1-7/16"	1-7/16"
Venturi	1-1/16"	1-1/16"	1-3/16"	1-3/16"
Main Metering Jets				
Standard	120-294S	120-294S	120-299S	120-299S
One Step Lean	120-297S	120-297S	120-300S	120-300S
Two Steps Lean	120-298S	120-298S	120-301S	120-301S

Step-Up Wire	75-1645	75-1723	75-1809	75-1809
Diameters (2 stage)	.026" x .022"	.027 x .025"	.027" x .022"	.027" x .022"
ADJUSTMENTS				
Float Setting (at center of floats)	1/4"	1/4"	1/4"	1/4"
Bowl Vent Valve (throttle closed)	1/16"	1/16"	1/16"	1/16"
Choke Unloader	1/4"	1/4"	1/4"	1/4"
Idle Mixture Screws (turn open)	2	2	1	1
Idle Speed R.P.M. (curb idle)	700	650	700	650
Vacuum Kick Adjustment (Drill Size)	#20	#41	#20	#28
Fast Idle Cam Position (Drill Size)	#41	#41	#41	#41
Fast Idle Speed R.P.M.	1500*	1600*	1300*	1700*
CHOKE				
Type	Well	Well	Well	Well
Control	Thermostatic Coil Spring			
Setting	On Index		On Index	

* After Approx. 500 Miles (if necessary)

CANADIAN CARBURETORS

Ball and Ball BBD Series Carburetor (1-1/4")

Type	Ball and Ball Dual Downdraft	
Engine Displacement	318 Cu. In.	318 Cu. In.
Manual Transmission	BBD-4609S	—
Automatic Transmission	—	BBD-4610S
Bore	1-7/16"	1-7/16"
Venturi	1-3/16"	1-3/16"
Main Metering Jets		
Standard	120-299S	120-299S
One Step Lean	120-300S	120-300S
Two Steps Lean	120-301S	120-301S
Step-Up Wire	75-1642	75-1645
Diameter (2 stage)	.025" x .022"	.026 x .022"
ADJUSTMENTS		
Float Setting (at center of floats)	1/4"	1/4"
Bowl Vent Valve (throttle closed)	1/16"	1/16"
Choke Unloader	1/4"	1/4"
Idle Mixture Screws (turned open)	2	2
Idle Speed R.P.M. (curb idle)	700	650
Vacuum Kick Adjustment (Drill Size)	#20	#28
Fast Idle Cam Position (Drill Size)	#41	#41
Fast Idle Speed R.P.M.	*1300	*1700
CHOKE		
Type	Well	Well
Control	Thermostatic Coil Spring	
Setting	On Index	On Index

* After Approx. 500 Miles (if necessary)

BALL AND BALL 1½ INCH BBD CARBURETOR

	Manual Transmission	Automatic Transmission
CARBURETOR		
Type	Dual Throat Downdraft	Dual Throat Downdraft
Model	BBD-4613S	BBD-4614S
Engine Displacement (cu. in.)	383	383
Bore	1-9/16"	1-9/16"
Venturi	1-5/16"	1-5/16"

Main Metering Jet		
Standard	120-311S	120-323S
One Step Lean	120-312S	120-324S
Two Steps Lean	120-313S	120-325S
Step-Up Wire (Standard)	75-1738	75-1818
Diameter (2 Stage)	.038" x .034"	.042" x .039"
ADJUSTMENTS		
Accelerator Pump Setting	1.00"	1.00"
Float Setting (at Center of Floats)	5/16"	5/16"
Vacuum Kick Adjustment	#20	#20
Fast Idle Cam Position Adjustment	#30	#30
Bowl Vent Valve (at curb idle)	1/16"	1/16"
Choke Unloader	1/4"	1/4"
Idle Mixture Screws (Turns Open)	1-1/2	1-1/2
Idle Speed RPM (Curb Idle)	700	600
Fast Idle Speed RPM	1600*	1600*
CHOKE		
Type	Well	Well
Control	Thermostatic Coil Spring	Thermostatic Coil Spring
Setting	2 Notches Rich	2 Notches Rich

* After Approx. 500 Miles (If Necessary)

CARTER AVS SERIES CARBURETORS

Type	Carter 4 Barrel Downdraft			
Model	AVS-4611S	AVS-4612S AVS-4639S	AVS-4615S	AVS-4616S AVS-4638S
Transmission Type	Manual	Automatic	Manual	Automatic
Engine Displacement (Cu. In.)	340	340	383	383
THOTTLE BORE				
Primary	1-7/16"	1-7/16"	1-7/16"	1-7/16"
Secondary	1-11/16"	1-11/16"	1-11/16"	1-11/16"
MAIN VENTURI				
Primary	1-3/16"	1-3/16"	1-3/16"	1-3/16"
Secondary	—	—	—	—
MAIN JET				
Primary	.089"	.089"	.089"	.089"
Secondary	.095"	.095"	.092"	.092"
LOW SPEED JET				
Primary	#65-.033"	#65-.031"	#65-.035"	#65-.031"
STEP-UP ROD (2 Stage)				
Standard	16-581	16-160	16-164	16-574
ADJUSTMENTS				
Accelerator Pump (top of plunger to air horn)	7/16"	7/16"	7/16"	7/16"
Fast Idle Cam Position (drill size)	#50	#50	#50	#50
Choke Unloader	1/4"	1/4"	1/4"	1/4"
Vacuum Kick (drill size)	#35	#50	#35	#50
Bowl Vent Valve Setting	1/8"	1/8"	1/8"	1/8"
Fast Idle Speed (r.p.m.)	1700*	1700*	1700*	1700*
Idle Speed (r.p.m.)	750	700	700	650
Secondary Throttle Lever Adj.	21/64"	21/64"	21/64"	21/64"
Secondary Throttle Lockout Adj.	.020"	.020"	.020"	.020"
Float Setting	7/32"	7/32"	5/16"	5/16"
Float Drop	1/2"	1/2"	1/2"	1/2"
Idle Mixture Screw (turns open)	1-2	1-2	1-2	1-2
Air Valve Spring Tension—(from Vertical-Turns)	2	2	2	2
CHOKE				
Type	Well	Well	Well	Well
Control	Coil Spring	Coil Spring	Coil Spring	Coil Spring
Setting	On Index	On Index	On Index	On Index

*After Approx. 500 Miles (If Necessary)

CARTER AVS SERIES CARBURETORS

Type	Carter 4 Barrel Downdraft			
Model	AVS-4711S	AVS-4682S	AVS-4617S	AVS-4618S AVS-4640S
Transmission Type	Manual	Automatic	Manual	Automatic
Engine Displacement (Cu. In.)	383	383	440	440
THROTTLE BORE				
Primary	1-7/16"	1-7/16"	1-11/16"	1-11/16"
Secondary	1-11/16"	1-11/16"	1-11/16"	1-11/16"
MAIN VENTURI				
Primary	1-3/16"	1-3/16"	1-7/16"	1-7/16"
Secondary	—	—	—	—
MAIN JET				
Primary	.089"	.089"	.101"	.101"
Secondary	.092"	.092"	.095"	.095"
LOW SPEED JET				
Primary	#65-.035"	#65-.031"	#65-.035"	#65-.031"
STEP-UP ROD (2 Stage)				
Standard	16-160	16-165	16-176	16-545
ADJUSTMENTS				
Accelerator Pump (top of plunger to air horn)	7/16"	7/16"	7/16"	7/16"
Fast Idle Cam Position (drill size)	#50	#50	#50	#50
Choke Unloader	1/4"	1/4"	1/4"	1/4"
Vacuum Kick (drill size)	#35	#50	#25	#35
Bowl Vent Valve Setting	1/8"	1/8"	1/8"	1/8"
Piston Index	—	—	—	—
Fast Idle Speed (r.p.m.)	1700	1700	1700*	1700*
Idle Speed (r.p.m.)	700	650	700	650
Secondary Throttle Lever Adj.	21/64"	21/64"	11/32"	3/8"
Secondary Throttle Lockout Adj.	.020"	.020"	.020"	.020"
Float Setting	5/16"	5/16"	7/32"	7/32"
Float Drop	1/2"	1/2"	1/2"	1/2"
Idle Mixture Screw (turns open)			1-2	1-2
Air Valve Spring Tension—(from Vertical-Turns)	2	2	2	2
CHOKE				
Type	Well	Well	Well	Well
Control	Coil Spring	Coil Spring	Coil Spring	Coil Spring
Setting	On Index	On Index	On Index	On Index

*After Approx. 500 Miles (If Necessary)

CARTER AFB SERIES CARBURETORS

Type	Carter 4 Barrel Downdraft		
Model	AFB-4619S F	AFB-4620S R	AFB-4621S R
Transmission Type	Manual—Automatic	Manual	Automatic
Engine Displacement (Cu. In.)	426 Hemi.	426 Hemi.	426 Hemi.
THROTTLE BORE			
Primary	1-7/16"	1-7/16"	1-7/16"
Secondary	1-11/16"	1-11/16"	1-11/16"
MAIN VENTURI			
Primary	1-3/16"	1-3/16"	1-3/16"
Secondary	1-9/16"	1-9/16"	1-9/16"
MAIN JET			
Primary	.089"	.089" L* .089" R*	.089" L .089" R*
Secondary	.089"	.092" L* .077" R*	.092" L* .077" R*
LOW SPEED JET			
Primary	#65-.028"	#65-.028"	#65-.031"
STEP-UP ROD (2 Stage)			
Standard	16-82X	16-543L 16-544R	16-543L 16-544R
ADJUSTMENTS			
Accelerator Pump (top of plunger to air horn)	7/16"	7/16"	7/16"
Fast Idle Cam Position (drill size)	—	#50	#50
Choke Unloader	—	1/4"	1/4"
Vacuum Kick (drill size)	—	—	—

Bowl Vent Valve Setting	—	5/32"	5/32"
Piston Index	—	#39	#39
Fast Idle Speed (r.p.m.)	—	2000*	2000*
Idle Speed (r.p.m.)	750	750	750
Secondary Throttle Lever Adj.	17/64"	17/64"	17/64"
Secondary Throttle Lockout Adj.	.020"	.020"	.020"
Float Setting	7/32"	7/32"	7/32"
Float Drop	3/4"	3/4"	3/4"
Idle Mixture Screw (turns open)	—	1-2	1-2
Air Valve Spring Tension—(from Vertical-Turns)	—	—	—
CHOKE			
Type	—	Integral	Integral
Control	—	Coil Spring	Coil Spring
Setting	—	2 Notches Rich	2 Notches Rich

* After Approx. 500 Miles (If Necessary)

HOLLEY MODEL 4160 4-BARREL DOWNDRAFT CARBURETOR

	TorqueFlite Transmission
Part No. Chrysler	2946582
Part No. Holley	R-4166A
Engine Displacement	440 Cu. In.
Throttle Bore	
Primary	1-9/16"
Secondary	1-9/16"
Main Venturi	
Primary	1-1/4"
Secondary	1-5/16"
Main Metering Jet	
Standard	64
1 Size Lean	62
2 Size Lean (5,000-10,000 ft.)	60
Adjustments	
Idle Fuel Mixture	1—1-1/4 Turn Open
Curb Idle Speed	600
Fast Idle Speed (No. 5 Step)	1400
Bowl Vent Valve	5/64"
Unloader Adjustment (wide open throttle)	5/32"
Vacuum Kick Adjustment	#46 Drill
Fast Idle Cam Position	#46 Drill
Float Setting (Dry)	
Primary	15/64"
Secondary	17/64"
Float Setting (Wet)	
Primary	9/16"
Secondary	13/16"
Accelerator Pump	
Override Adjustment (wide open throttle)	.015 Min.
Power Valve (stamped)	65
Choke	
Type	Well
Control	Coil Spring
Setting	2-Notches Rich

SPECIAL TOOLS

T109-287	Elevating Legs
C-3886	Stand
C-3747	Power Valve Remover-Installer
C-3748	Main Metering Jet Remover-Installer
C-4051	Wet Fuel Gauge
CL-13	Clutch Head Screwdriver

FUEL PUMP SPECIFICATIONS

Fuel Pump	6 170 Cu. In. 225 Cu. In.	V-8 273 Cu. In. 318 Cu. In. 340 Cu. In.	V-8 383 Cu. In. 440 Cu. In.	V-8 426 Cu. In. Hemi	V-8 383 Cu. In. 440 Cu. In.	V-8 440 Cu. In. H.P.
Make	Carter	Carter	Carter	Carter	Airtex	Carter
Model	MS-4588S	MS-4587S	MS-4589S	MS-4024S	RD-267A	MS-4434S
Type	Diaphragm	Diaphragm	Diaphragm	Diaphragm	Diaphragm	Diaphragm
Number of Valves	2	2	2	3	2	2
Driven by	Camshaft	Camshaft	Camshaft	Camshaft	Camshaft	Camshaft
Pump Pressure (pounds)	3-1/2 to 5	5 to 7	3-1/2 to 5	7 to 8-1/2	3-1/2 to 5	6 to 7-1/2

PROPELLER SHAFT AND UNIVERSAL JOINTS

CONTENTS

	Page		Page
CROSS AND ROLLER UNIVERSAL JOINT	5	SERVICE DIAGNOSIS	1
GENERAL INFORMATION	1	SPECIFICATIONS	7
PROPELLER SHAFT ANGULARITY	1	TIGHTENING REFERENCE	10

GENERAL INFORMATION

The propeller shaft and universal joint applications on the Valiant and Plymouth model vehicles incorporate an internally splined yoke at the front universal joint. The sliding splined yoke slides fore and aft on the transmission output shaft to compensate for the movement of the rear axle. A bellows type rubber seal on the transmission extension, with a nylon ring which fits over the sliding yoke is used to exclude road splash and other foreign material (Fig. 1).

The universal joints and sliding spline yoke are permanently lubricated. The joints should be inspected every time the vehicle is serviced, for external seal leakage. The joints need not be disassembled or relubricated unless seal leakage is evident. If the cross and roller universal joints are repacked with the recommended lubricant, see "Lubrication", Group 0 of this manual.

Four types of propeller shafts are used on Valiant, Barracuda and Plymouth models, dependent upon engine transmission and axle ratio combinations. Certain applications require the usage of a propeller shafts which incorporate an inertia type ring at the front universal joint (Fig. 2). Other applications will require the use of solid propeller shafts and also shafts that are rubber isolated near the near universal joint (Fig. 3) and the propeller shaft that incorporates an internal vibration absorber inside the shaft in the location of the front universal joint. Servicing of all four propeller shafts are the same in all respects.

SERVICE DIAGNOSIS

Condition	Possible Cause	Correction
PROPELLER SHAFT VIBRATION	(a) Undercoating or other foreign matter on shaft.	(a) Clean exterior shaft and wash with solvent.
	(b) Loose Universal joint flange bolts.	(b) Tighten bolt nuts to specified torque.
	(c) Loose or bent universal joint flange or high runout.	(c) Install new flange. Tighten to specifications.
	(d) Improper drive line angularity.	(d) Correct angularity. See "Propeller Shaft Angularity."
	(e) Rear spring center bolt not in seat.	(e) Loosen spring U-bolts, reseat center bolts and tighten U-bolts to specifications.
	(f) Worn universal joint bearings or missing rollers.	(f) Recondition universal joint.
	(g) Propeller shaft damaged (bent tube) or out of balance.	(g) Install new propeller shaft.
	(h) Broken rear spring.	(h) Replace rear spring.
	(i) Rear springs not matched.	(i) Install correct spring.
	(j) Excessive runout or unbalance condition.	(j) Reindex propeller shaft 180°, reride and correct as necessary.
UNIVERSAL JOINT NOISE	(a) Propeller shaft flange bolt nuts loose.	(a) Tighten nuts to specifications.
	(b) Lack of lubrication.	(b) Recondition universal joint.

SERVICE PROCEDURES

PROPELLER SHAFT ANGULARITY

The increased emphasis on the need for a quiet, smooth operating drive line in all cars require that the universal joint angles be maintained within acceptable tolerances. Propeller shaft and rear axle housing angularity may be measured by using the Propeller Shaft Angularity Tool C-3976 (Fig. 4). This tool makes it possible to check the angularity at the engine and differential and carrier.

All joint angle measurements on the vehicle should be made with the car supported by the tires if possible; such as, on an alignment pit or a platform hoist. A two post hoist may be used where other means are

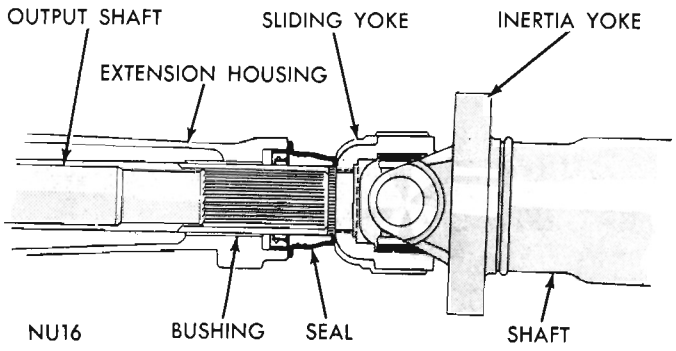

Fig. 1—Front Universal Joint Sliding Yoke

not available. The vehicle should be approximately level when taking angle measurements with any heavy items removed from the luggage compartment or passenger compartment. The fuel tank should be full or the equivalent weight simulated.

When using a twin post hoist, the vehicle must be supported by the lower control arms and rear axle housing. **DO NOT USE A FRAME CONTACT HOIST WHEN MEASURING PROPELLER SHAFT ANGULARITY.**

FRONT UNIVERSAL JOINT ANGLE

(1) Attach engine adapter SP-5046 to gauge SP-5060.

(2) Position gauge on left side of engine so that adapter pins contact flat surface of engine oil pan flange adjacent to the vertical wall of the oil pan (Fig. 5). On models equipped with six cylinder engines, use right side of the engine. The gauge must be held vertical as shown with arrow on gauge SP-5060 pointing toward the front of car.

(3) Adjust position of bubble in spirit level in accordance with the listing for appropriate car model as shown in Chart (Fig. 13).

(4) Remove engine adapter SP-5046 and gauge SP-5060 from flange adjacent to the vertical wall of oil pan and separate the gauge from engine adapter.

(5) With gauge SP-5060 adjusted for the correct engine angle reference, position gauge SP-5060 squarely and firmly along underside of the propeller shaft (Fig. 6). Make sure Veeway is in alignment and that both adapter pins are contacting propeller shaft. Be sure arrow on gauge is pointing toward the front of car.

(6) Observe position of bubble in spirit level and compare the position with that shown on Chart (Fig. 13) for front joint angle. A normal joint angle will cause bubble to position itself within the acceptable range. If bubble is found to be slightly forward of the acceptable tolerance range, this means that the angle is actually smaller than that specified and does not need correcting. If bubble in spirit level is found to be rearward of the acceptable range, the angle is too large, and must be corrected. To reduce front universal joint angle, install a flat shim between the transmission extension housing and rear engine mount (Fig. 7). Flat shims 1/8 inch in thickness are required to move the bubble in spirit level one graduation.

(7) To install shim, loosen bolts in rear mount to transmission extension housing.

(8) Raise transmission sufficiently using a floor stand and block of wood beneath transmission oil pan.

(9) Install 1/8″ shim, lower transmission, remove

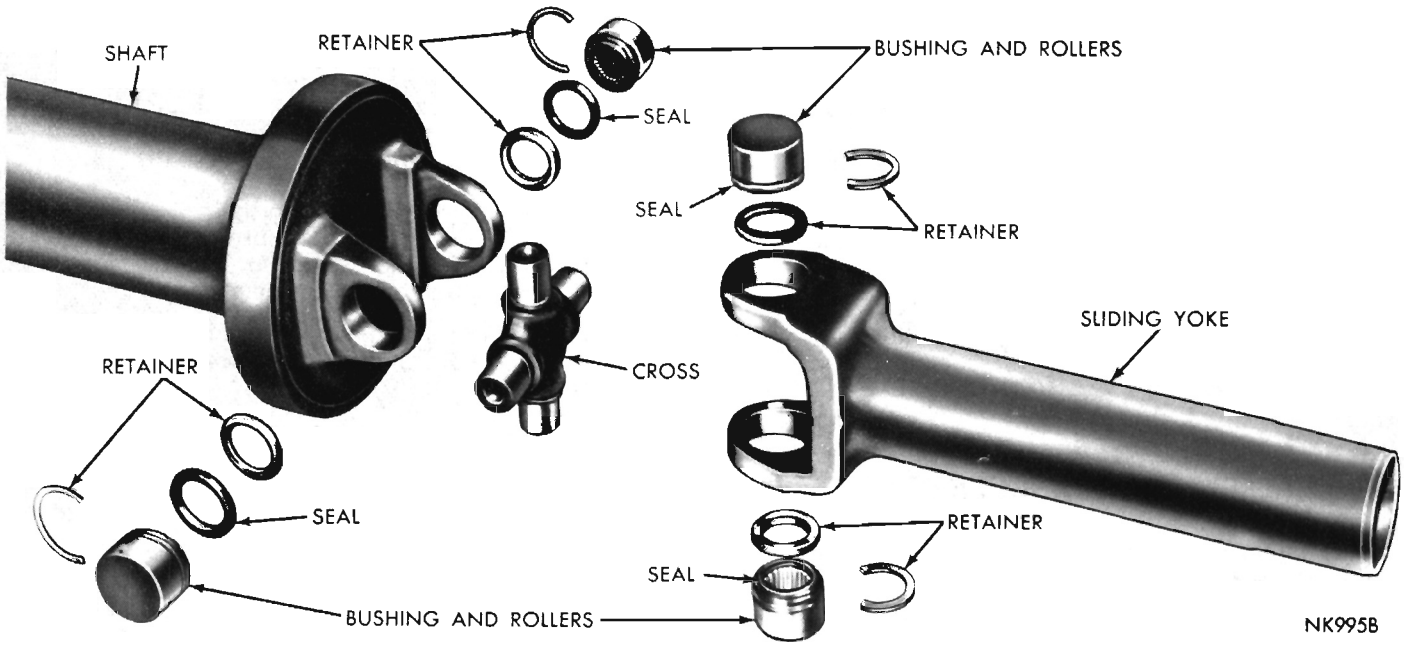

Fig. 2—Cross and Roller Universal Joint with Inertia Ring—Front

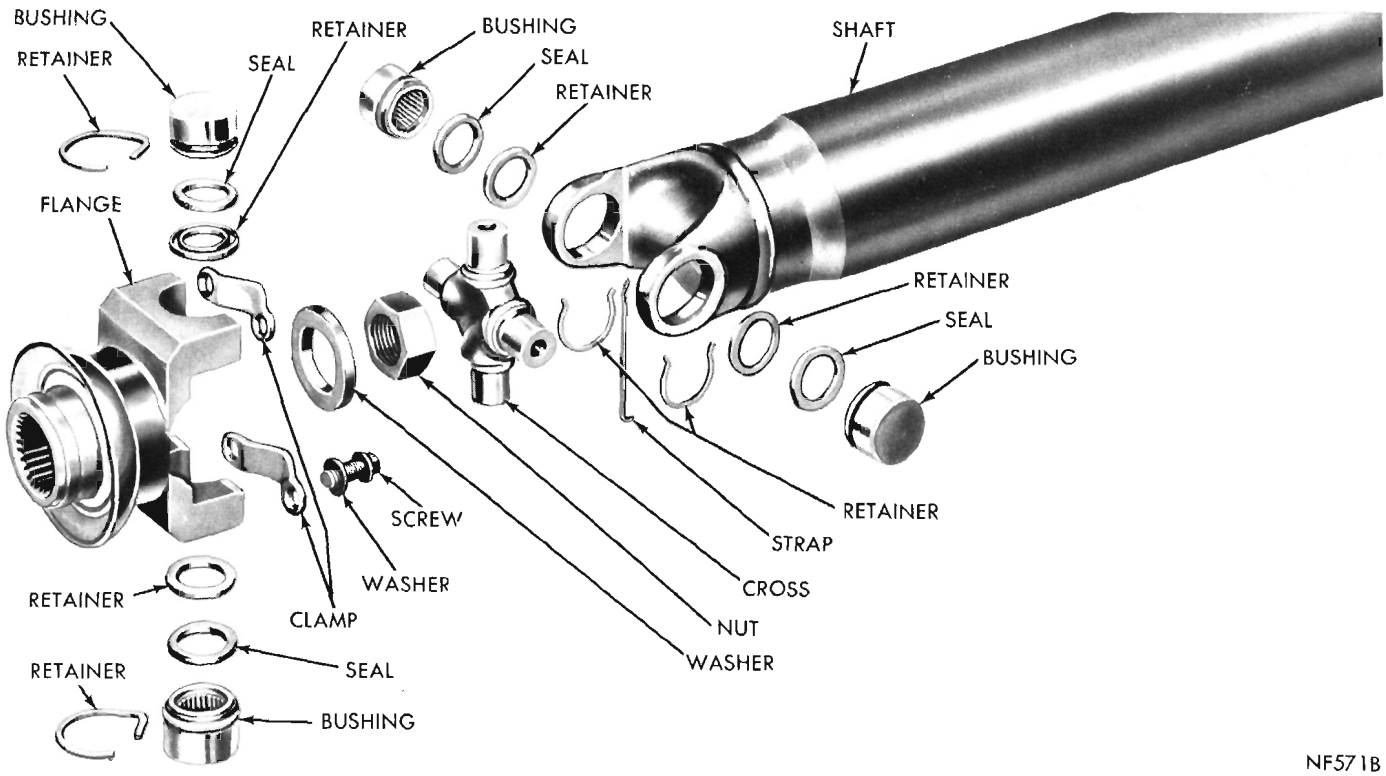

Fig. 3—Cross and Roller Universal Joint—Rear

floor stand and tighten bolts in rear mount to transmission extension housing to specifications.

(10) Recheck front joint angle, starting with step (1) of "Procedure."

CAUTION: If a great amount of shimming is required at the transmission extension rear mount, make sure extension housing and inertia dampner on propeller shaft will not make contact with floor pan or make interference with seat belt mounting bolts.

REAR UNIVERSAL JOINT ANGLE

(1) Remove pinion bumper plate from differential and carrier housing and position gauge SP-5060 on the machined pads with locating pin in rear bolt hole (Fig. 8). The arrow on gauge should point toward the front of car. On models equipped with 7-1/4 axle place propeller shaft alignment gauge adapter SP-5038 between the gauge and machined pads of the carrier (Fig. 9). On models equipped with 9-1/4" or 9-3/4" axle, position adapter C-4050 on machined pad of axle and install gauge (Fig. 10). The arrow on gauge should point toward front of car.

(2) Adjust position of bubble in spirit level in accordance with the listing for appropriate car model as shown in Chart (Fig. 13).

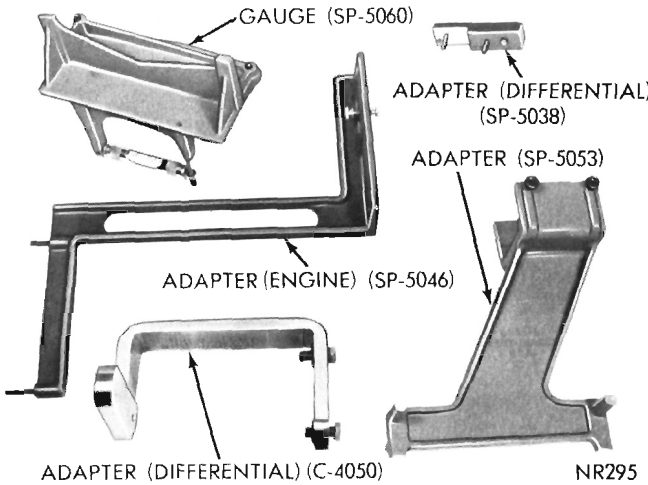

Fig. 4—Propeller Shaft Angularity Tool C-3976

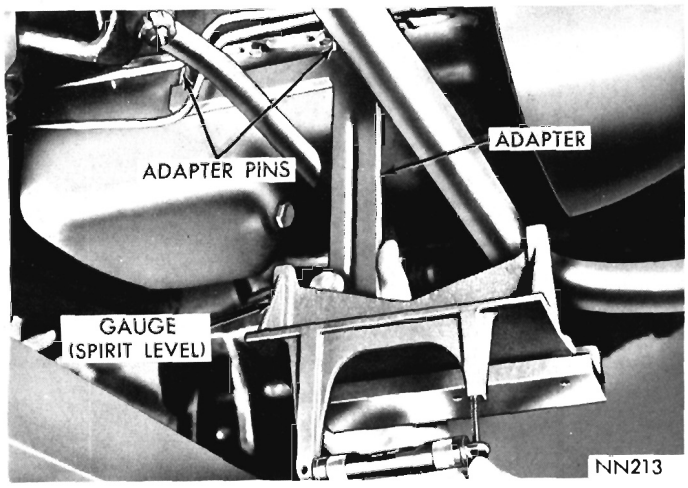

Fig. 5—Adjusting Gauge on Engine (Front Joint Angle Reference)

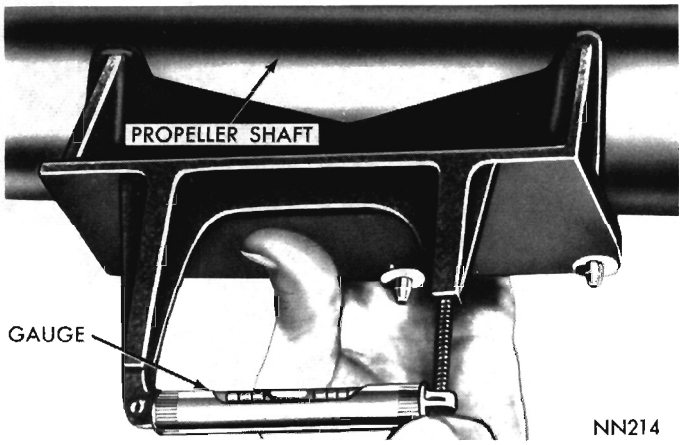

Fig. 6—Measuring Front Universal Joint Angle

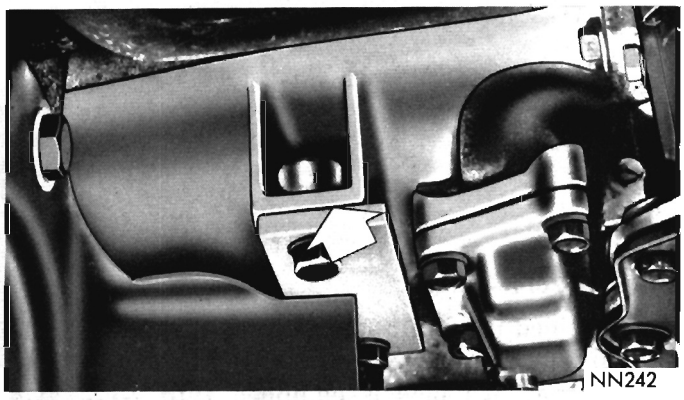

Fig. 7—Shim Location (Front Universal Joint Angle Correction)

(3) Remove gauge SP-5060 from differential and carrier assembly and position it squarely and firmly along underside of propeller shaft (Fig. 11). Make sure Veeway is in alignment and that both adapter pins are contacting shaft. Be sure arrow on gauge is pointing toward the front of car.

(4) Observe position of bubble in spirit level and compare the position with that shown on Chart (Fig. 13) for rear joint angle. A normal joint angle will cause the bubble to position itself within the acceptable range.

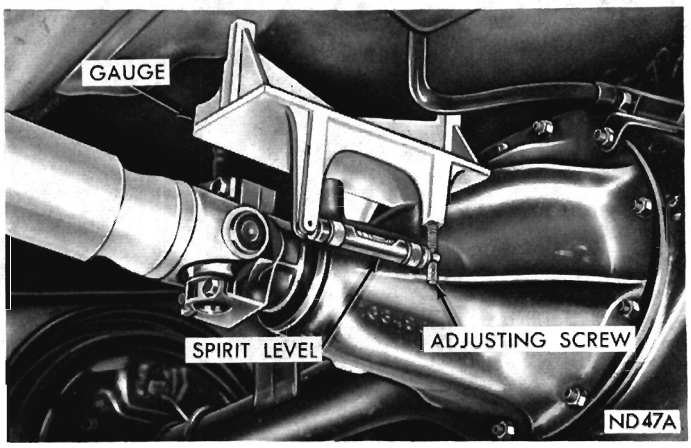

Fig. 8—Adjusting Gauge on Differential (Rear Joint Angle Reference)

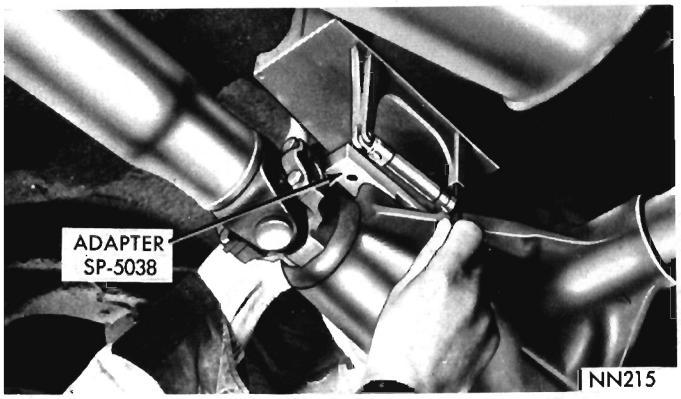

Fig. 9—Adjusting Gauge on Differential Models with 7-1/4" Axle (Rear Joint Angle Reference)

(5) If bubble in spirit level is found outside the acceptable range indicated on Chart (Fig. 13), you will have to install a wedge type shim between both rear springs and the axle housing spring pads to bring position of bubble within the acceptable range.

To make sure shims are installed properly, remember this rule. If bubble is too far forward, insert shim with thick end toward front of car. If bubble is too far to rear, the nose of differential is too high, so thick end of shim goes toward rear of car (Fig. 12). A 1° shim will move bubble in spirit level about 3 graduations forward or rearward, depending on which way the thick end is installed.

Presently, there are a number of makes of wedge type shims available commercially. Always make sure shims you use are made of steel and are the same width as the springs on the car. Chrysler Parts Divi-

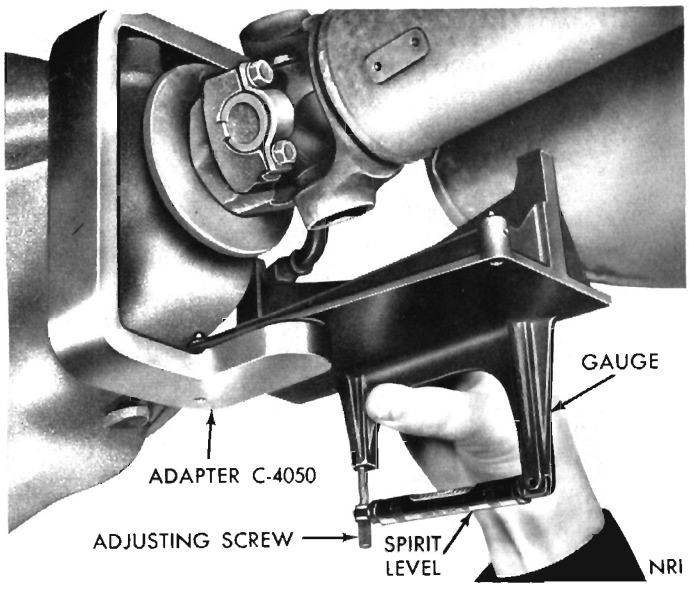

Fig. 10—Adjusting Gauge on Differential Models with 9-1/4" or 9-3/4" Axle (Rear Joint Angle Reference)

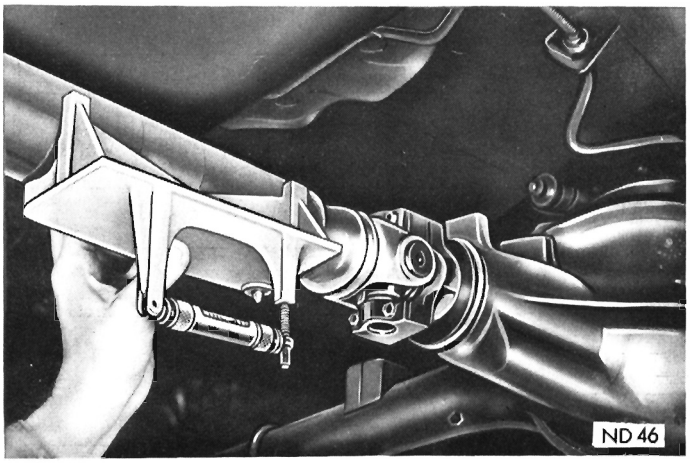

Fig. 11—Measuring Rear Universal Joint Angle

sion has made available steel shims in varying angles of 1/2°, 1°, 2°, and 3° making it possible with these combinations to set the rear universal joint angle within 1/2° of a perfect angle.

(6) To install shims, loosen spring "U" bolt nuts and install shims between rear springs and axle housing spring pads.

(7) Tighten spring "U" bolt nuts to proper specifications.

(8) Recheck rear universal joint angle after installation of wedge type shim, to make sure position of bubble in spirit level is within the acceptable range.

(9) Reinstall rebound bumper and plate assembly on differential carrier, tighten screws to 200 inch-pounds.

CAUTION: Under no circumstances should a shim pack be used that is over 1/4 inch thick at the center. If that much shimming is required, look for a possible broken rear spring, mislocated spring seat, etc.

PROPELLER SHAFT

Removal—Rear Joint (All Models)

(1) Remove both rear universal joint roller and bushing assembly clamps from rear axle drive pinion flange (Fig. 3). **Do not disturb the retaining strap used to hold bushing assemblies on universal joint cross, if so equipped.**

CAUTION: Do not allow propeller shaft to drop or hang loose from either joint during removal. Wire up or otherwise support the loose end of shaft to prevent damage to joint.

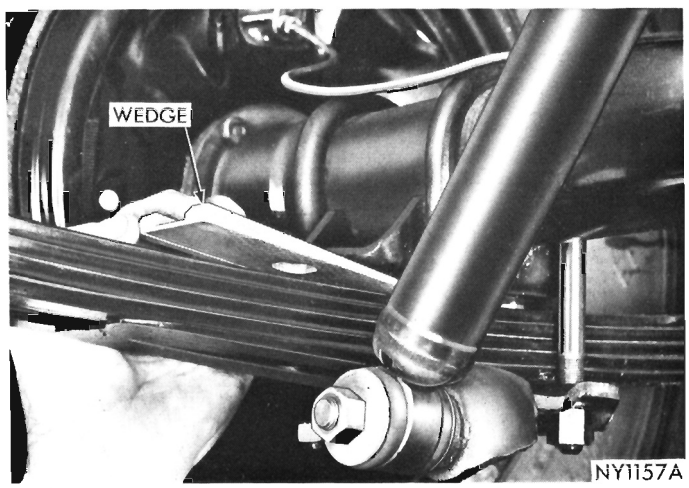

Fig. 12—Tapered Wedge Location (Rear Universal Joint Angle Correction)

Front Joint (All Models)

(1) Slide propeller shaft with the front yoke from the transmission output shaft (Fig. 2). Be careful not to damage splines on output shaft or yoke. Examine sliding yoke seal for evidence of leakage. If no leakage is evident, do not disturb the seal. If necessary to replace the seal, see Transmission, Group 21.

CAUTION: It is important to protect the machined surface of the sliding yoke from damage after propeller shaft has been removed.

Installation

Front Joint (All Models)

(1) Before installing propeller shaft, wipe sliding yoke clean and inspect machined surface for scratches, nicks, burrs and correct as necessary.

(2) Engage the yoke splines on end of output shaft, being careful not to burr the splines (Fig. 2).

Rear Joint (All Models)

(1) Install rear universal joint cross and roller bushings in the seats of drive pinion flange. Install bushing clamps and attaching screws (Fig. 3). Tighten clamp screws to 170 inch-pounds on all models.

CROSS AND ROLLER UNIVERSAL JOINT

Disassembly

(1) **Before disassembling universal joint, mark yoke, cross and bushings to facilitate reassembly if inspection discloses parts are serviceable.**

(2) Remove four bushing retainers from universal joint cross assembly. Using a socket approximately the same diameter as bushing, press one bushing and roller assembly out of yoke by pressing opposite bushing in.

(3) Press out remaining bushing and roller assembly by pressing on end of cross.

(4) Remove cross assembly from yoke. Do not remove seal retainers from cross assembly. The cross and retainers are serviced as an assembly.

Cleaning and Inspection

(1) Clean all parts in a suitable solvent and dry with compressed air. Examine bearing surfaces of cross. They should be smooth and free from ripples and pits. If bearing surfaces or seal retainers are damaged, replace cross assembly.

UNIVERSAL JOINT	ANGULARITY MEASUREMENT AND CORRECTION CHART	
CAR TYPE AND WHEELBASE	FRONT JOINT ANGLE ADJUST POSITION OF BUBBLE WITH GAUGE AT ENGINE OIL PAN FLANGE	REAR JOINT ANGLE ADJUST POSITION OF BUBBLE WITH GAUGE ON DIFFERENTIAL CARRIER
VALIANT 108" W.B. 7¼" AXLE	← FRONT OF CAR 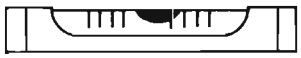	← FRONT OF CAR 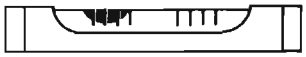
VALIANT 108" W.B. 8¾" AXLE	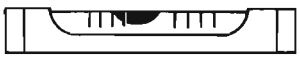	
BARRACUDA 108" W.B. 7¼" AXLE		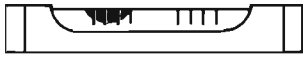
BARRACUDA 108" W.B. 8¾" AXLE	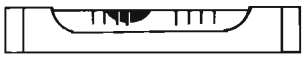	
BARRACUDA 108" W.B. 8¾" AXLE AND 383 C.I. ENG.	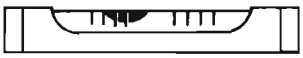	
PLYMOUTH 116" W.B.	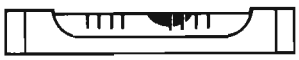	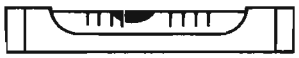
PLYMOUTH 116" W.B. 462 OR 440 C.I. ENG. 4-SPEED MANUAL TRANS.	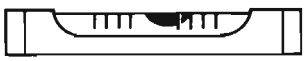	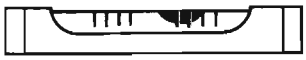
PLYMOUTH STATION WAGON 117" W.B.	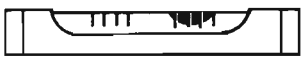	
PLYMOUTH 119" W.B. (EXCEPT STATION WAGON AND 440 C.I. ENG. PLYMOUTHS).		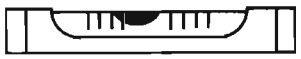
PLYMOUTH 121" W.B. STATION WAGON OR 119" W.B. PLYMOUTHS W/440 C.I. ENG.		
FINAL READING ON PROPELLER SHAFT (ALL MODELS)	ACCEPTABLE REGION ANGLE LOW ANGLE HIGH 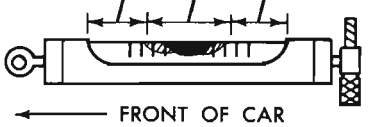 ← FRONT OF CAR	ACCEPTABLE REGION ANGLE LOW ANGLE HIGH 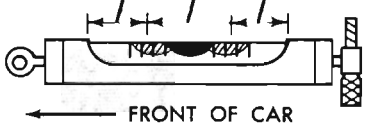 ← FRONT OF CAR
CORRECTION PROCEDURE NR293	ADD SHIMS AT ENGINE REAR MOUNT (⅛" FOR EACH GAUGE DIVISION) TO REDUCE FRONT JOINT ANGLE. CORRECT LOW ANGLES ONLY IF FLOOR PAN INTERFERENCE IS ENCOUNTERED.	ADD SHIMS AT REAR AXLE HOUSING SPRING SEATS. 1° WEDGE SHIM MOVES BUBBLE 3 TO 4 GAUGE DIVISIONS. TO REDUCE ANGLE, INSTALL THICK END OF WEDGE TO FRONT OF CAR.

Fig. 13—Universal Joint Angularity Reference Chart

(2) Examine rollers in bushings. Rollers that have operated on a worn cross should be replaced. Rollers should have a uniformly good appearance and roll freely inside bushings.

Assembly

(1) Lubricate bushing and roller assemblies with Multi-Purpose Grease NLGI Grade 2 EP or Multi-Mileage Lubricant part number 2525035 or equivalent. Also, fill reservoirs in the ends of the cross.

(2) Place cross in propeller shaft yoke, observing identification marks made at disassembly. Install bushing and roller assemblies in yoke, matching identifying marks.

(3) Press both bushing assemblies into yoke while guiding cross into bushings. Correctly position bushings so retainers can be installed.

(4) Position remaining two bushing assemblies on cross. Install retainer strap to hold bushings on cross during installation of shaft on drive pinion flange. Lightly tap outer ends of bushings while rotating cross to be sure cross and bushings operate freely.

SPECIFICATIONS

VALIANT-BARRACUDA

Model Application

PROPELLER SHAFT	*Length-Inches	Diameter-Inches			
Type	Tubular				
MANUAL TRANSMISSION 3-SPEED					
170, 225, 273 C. I. Engine 7-1/4" Axle	51.43				
318 C. I. Engine 8-3/4" Axle	49.27				
MANUAL TRANSMISSION 4-SPEED					
273, 318, 340, 383 C. I. Engine 8-3/4" Axle	48.60				
AUTOMATIC TRANSMISSION					
170, 225, 273, 318 C. I. Engine 7-1/4 Axle	51.43				
318 C. I. Engine 8-3/4" Axle	49.27				
340, 383 C. I. Engine 8-3/4" Axle	44.88				
AXLE RATIO	2.76	2.93	3.23	3.55	3.91
MANUAL TRANSMISSION 3-SPEED					
170 C. I. Engine 7-1/4" Axle	—	3.00 (IVA)	3.00 (IVA)	3.00 (IVA)	—
225 C. I. Engine 7-1/4" Axle	—	—	3.00 (IVA)	2.75	—
273 C. I. Engine 7-1/4" Axle	—	3.00 (IVA)	3.00 (IVA)	—	—
318 C. I. Engine 8-3/4" Axle	—	—	2.75	—	—
MANUAL TRANSMISSION 4-SPEED					
273, 318, 340, 383 C. I. Engine 8-3/4" Axle	—	—	2.75	2.75	2.75
AUTOMATIC TRANSMISSION					
170, 225 C. I. Engine 7-1/4" Axle	2.75	3.00 (IVA)	3.00 (IVA)	3.00 (IVA)	—
273 C. I. Engine 7-1/4" Axle	—	3.00 (IVA)	3.00 (IVA)	—	—
318 C. I. Engine 7-1/4" Axle	2.75	—	—	—	—
318 C. I. Engine 8-3/4" Axle	—	—	2.75	—	—
340, 383 C. I. Engine 8-3/4" Axle	—	—	3.00	3.00	—
UNIVERSAL JOINTS					
Type—Front		Sliding Spline Cross and Roller			
—Rear		Cross and Roller			

*From Centerline of front yoke bearing bores to Centerline of rear bearing bores.
(IVA) Internal Vibration Absorber at front joint of propeller shaft.

SATELLITE

Model Application	*Length-Inches	Diameter-Inches				
PROPELLER SHAFT						
Type	Tubular					
AXLE RATIO		2.93	2.94	3.23	3.54	3.55
MANUAL TRANSMISSION 3-SPEED (A-903)						
225 C. I. Engine—except Station Wagon 7-1/4" Axle	57.65			2.75 (R)		
225 C. I. Engine—except Station Wagon 8-3/4" Axle	55.47			3.00 (IVA)		3.00
225 C. I. Engine—Station Wagon 8-3/4" Axle	56.17			3.00 (IVA)		3.00
MANUAL TRANSMISSION 3-SPEED (A-745)						
225 C. I. Engine—except Station Wagon 8-3/4" Axle	51.44			3.00 (IVA)		3.00 (IVA)
318 C. I. Engine—except Station Wagon 8-3/4" Axle	51.44		3.00 (IVA)	3.00 (IVA)		3.00 (IVA)
318 C. I. Engine—Station Wagon 8-3/4" Axle	52.03		3.00 (IVA)	3.00 (IVA)		3.00 (IVA)
MANUAL TRANSMISSION 4-SPEED (A-833)						
383 C. I. Engine 2BBL—except Station Wagon 8-3/4" Axle	51.50			3.00 (I)		
Station Wagon 8-3/4" Axle	52.07			3.00 (I)		
383 C. I. Engine 4BBL—except Station Wagon 8-3/4" Axle	51.50			3.00 (I)		3.00 (I)
Station Wagon 8-3/4" Axle	52.07			3.00 (I)		3.00 (I)
426, 440 C. I. Engine—except Station Wagon 9-3/4" Axle	50.39				3.00 (I)	
AUTOMATIC TRANSMISSION (A-904)						
225 C. I. Engine—except Station Wagon 7-1/4" Axle	57.65	3.00 (IVA)		3.00 (IVA)		
225 C. I. Engine—except Station Wagon 8-3/4" Axle	55.47		3.00 (IVA)	3.00 (IVA)		2.75 (R)
225 C. I. Engine—Station Wagon 8-3/4" Axle	56.17		3.00 (IVA)	3.00 (IVA)		2.75 (R)
318 C. I. Engine—except Station Wagon 8-3/4" Axle	55.47		2.75 (R)	3.00		3.00
318 C. I. Engine—Station Wagon 8-3/4" Axle	56.17		2.75 (R)	3.00		3.00
AUTOMATIC TRANSMISSION (A-727)						
225 C. I. Engine—except Station Wagon 8-3/4" Axle	51.44		3.00 (IVA)	3.00 (IVA)		3.00 (IVA)
225 C. I. Engine—Station Wagon 8-3/4" Axle	52.03		3.00 (IVA)	3.00 (IVA)		3.00 (IVA)
318 C. I. Engine—except Station Wagon 8-3/4" Axle	51.50		3.00 (I)	3.00 (I)		3.00 (I)
318 C. I. Engine—Station Wagon 8-3/4" Axle	52.07		3.00 (I)	3.00 (I)		3.00 (I)
383 C. I. Engine 2BBL—except Station Wagon 8-3/4" Axle	51.50		3.00 (I)	3.00 (I)		
Station Wagon 8-3/4" Axle	52.07		3.00 (I)	3.00 (I)		
383 C. I. Engine 4BBL—except Station Wagon 8-3/4" Axle	51.50			3.00 (I)		3.00 (I)
Station Wagon 8-3/4" Axle	52.07			3.00 (I)		3.00 (I)
426, 440 C.I. Engine—except Station Wagon 8-3/4" Axle	51.50			3.00 (I)		
426, 440 C. I. Engine—except Station Wagon 9-3/4" Axle	50.39				3.00 (I)	
UNIVERSAL JOINTS						
Type—Front	Sliding Spline Cross and Roller					
—Rear	Cross and Roller					

*From Centerline of front yoke bearing bores to Centerline of rear bearing bores.

(I) Inertia ring at front joint of propeller shaft.

(IVA) Internal Vibration Absorber at front joint of propeller shaft.

(R) Rubber Isolated at rear joint of propeller shaft.

Model Application	*Length-Inches	Diameter-Inches				
PROPELLER SHAFT						
Type ..... Tubular						
AXLE RATIO		2.76	2.94	3.23	3.31	3.55
MANUAL TRANSMISSION 3-SPEED (A-903)						
225 C. I. Engine—except Station Wagon 8-3/4" Axle	58.12			2.75		2.75
Station Wagon 8-3/4" Axle	60.16			3.25 (IVA)		3.25 (IVA)
MANUAL TRANSMISSION 3-SPEED (A-745)						
225 C. I. Engine—except Station Wagon 8-3/4" Axle	54.13			3.00		3.00
Station Wagon 8-3/4" Axle	55.68			3.00 (I)		3.00 (I)
318 C. I. Engine—except Station Wagon 8-3/4" Axle	54.13			3.00		3.00
Station Wagon 8-3/4" Axle	55.68			3.00 (I)		3.00 (I)
383 C. I. Engine 2BBL—except Station Wagon 8-3/4" Axle...	54.13			2.75 (I)		
Station Wagon 8-3/4" Axle	55.68			3.00 (I)		
MANUAL TRANSMISSION 4-SPEED (A-833)						
383 C. I. Engine 4BBL—except Station Wagon 8-3/4" Axle...	53.64			3.00 (I)		
Station Wagon	55.68			3.00 (I)		
440 C. I. Engine—except Station Wagon 9-1/4" Axle	53.64				3.00 (I)	
AUTOMATIC TRANSMISSION (A-904)						
225 C. I. Engine—except Station Wagon 8-3/4" Axle	58.12			2.75		
Station Wagon 8-3/4" Axle	60.16			3.25 (IVA)		
318 C. I. Engine—except Station Wagon 8-3/4" Axle	58.17			3.25 (IVA)		
Station Wagon 8-3/4" Axle	60.16		3.25 (IVA)	3.25 (IVA)		
AUTOMATIC TRANSMISSION (A-727)						
225 C. I. Engine—except Station Wagon 8-3/4" Axle	54.13			2.75 (I)		
Station Wagon 8-3/4" Axle	55.68			3.25 (IVA)		
318 C. I. Engine—except Station Wagon 8-3/4" Axle	54.13			3.25 (IVA)		
Station Wagon 8-3/4" Axle	55.68		3.25 (IVA)	3.25 (IVA)		
383 C. I. Engine 2BBL—except Station Wagon 8-3/4" Axle...	54.13	3.25 (IVA)		3.25 (IVA)		
Station Wagon 8-3/4" Axle	55.68	3.25 (IVA)		3.25 (IVA)		
383, 440 C. I. Engine—except Station Wagon 8-3/4" Axle.....	53.64	3.25 (IVA)		3.25 (IVA)		
Station Wagon 8-3/4" Axle	55.68	3.25 (IVA)		3.25 (IVA)		
UNIVERSAL JOINTS						
Type—Front		Sliding Spline Cross and Roller				
—Rear		Cross and Roller				

*From Centerline of front yoke bearing bores to Centerline of rear bearing bores.

(I) Inertia ring at front joint of propeller shaft.

(IVA) Internal Vibration Absorber at front joint of propeller shaft.

TIGHTENING REFERENCE

	Pounds	
	Foot	Inch
Pinion Flange Clamp Screw (7-1/4", 8-3/4" Axle)		170
Pinion Flange Clamp Screw (9-1/4", 9-3/4" Axle)		170
Rear Spring "U" Bolt Nut (7-1/4" Axle)	40	
Rear Spring "U" Bolt Nut (8-3/4", 9-1/4", 9-3/4" Axle)	45	
Pinion Bumper Plate Screw (7-1/4" Axle)		150
Pinion Bumper Plate Screw (8-3/4", 9-1/4", 9-3/4" Axle)		200

SHOCK ABSORBERS AND REAR SPRINGS

CONTENTS

	Page		Page
REAR SPRINGS	4	SPECIFICATIONS	6
SHOCK ABSORBERS	1	TIGHTENING REFERENCE	7

GENERAL INFORMATION

The rear springs are of the semi-elliptical type and are designed to have little or no camber under very light loads. When the load on the rear suspension is increased, a small amount of reverse spring camber is normal. A relatively flat rear spring gives better lateral stability and reduces side sway which contributes to a well controlled ride and superior handling and stability characteristics.

Rubber bushings inserted into the "eye" of each end of the main leaf are the means by which the springs are attached to the mounting brackets bolted to the body at the front and to spring shackles at the rear. The rubber bushings serve as isolators and reduce noise being transmitted to the body.

Heavy duty rear springs offered as part of the heavy duty suspension option have a higher rate for greater stability under loaded conditions. (Trailer Towing). They are part of a complete, engineered option which includes heavy-duty torsion bars, and heavy-duty shock absorbers, a sway bar is included on some heavy-duty packages and is optional on others.

Zinc interleaves are used between the leaves of all springs to reduce corrosion and improve spring life.

The double acting shock absorbers do not help support the load, but are a means used to control ride motion. The shock absorbers are matched to the particular suspension of the vehicle. It is not usually necessary to replace shock absorbers in pairs. Their action does NOT change with use. Replace a shock absorber only if it is broken or leaking badly (not just damp) or has lost resistance in one or both directions, due to internal damage. Slight fluid seepage during cold weather operation, resulting in a damp appearance, is normal and does not affect the performance or life of the shock absorber. Resistance in the rebound direction is usually greater than in the jounce direction. Be sure to use the same replacement part as the original equipment.

SERVICE DIAGNOSIS

Condition	Possible Cause	Correction
SPRINGS SAG OR BOTTOM	(a) Springs sagged or taken a set.	(a) Replace the spring.
	(b) Broken, bent or weak spring leaves.	(b) Replace the spring.
SPRING NOISE	(a) Loose "U" bolts.	(a) Tighten "U" bolt nuts to specifications.
	(b) Loose or worn eye bushings.	(b) Replace the bushings and tighten the shackle bolt nuts to specifications.
	(c) Worn or missing interliners.	(c) Install new interliners.
SPRING BREAKAGE	(a) Loose "U" bolts.	(a) Replace spring. Inspect "U" bolts for damage. Tighten "U" bolt nuts to specifications.
	(b) Shock absorber inoperative.	(b) Replace the spring and the shock absorber.
SHOCK ABSORBER NOISY	(a) Bushing excessively worn.	(a) Replace bushing.
	(b) Undercoating on shock absorber reservoir.	(b) Clean undercoating off shock absorber.
	(c) Loose bolt or stud.	(c) Tighten to specifications.
	(d) Air trapped in system.	(d) Purge shock absorber.
SHOCK ABSORBER DRIPPING OIL	(a) Worn seal.	(a) Replace shock absorber.
	(b) Damaged crimp or reservoir.	(b) Replace shock absorber.

SERVICE PROCEDURES

SHOCK ABSORBERS

Front-Removal (Figs. 1, 2, and 3).

(1) Loosen and remove nut and washer from upper end of shock absorber piston rod.

(2) Raise car so wheels are clear of floor and loosen and remove lower attachment bolt nut. Remove this bolt from lower shock absorber eye and lower control arm mounting bracket.

(3) Compress shock absorber by pushing upward

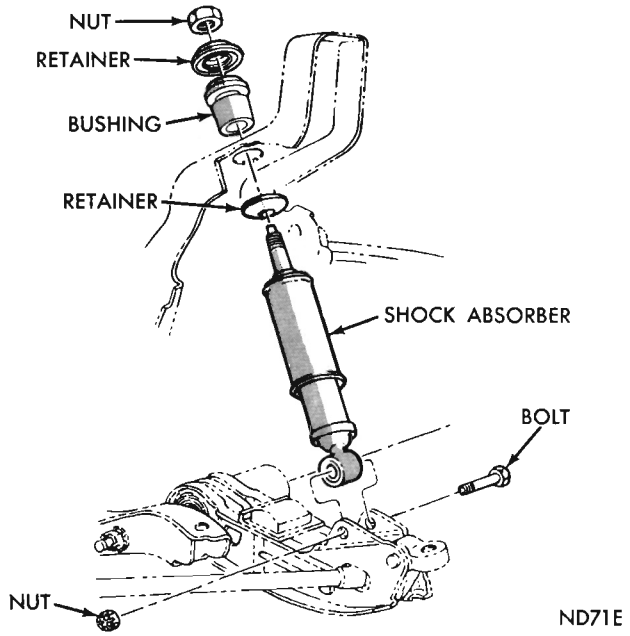

Fig. 1—Front Shock Absorber (Valiant-Barracuda)

and remove from vehicle by pulling down and out of upper shock absorber mounting bushing.

(4) Check appearance of upper shock absorber mounting bushing and if it appears worn, damaged, or deteriorated, remove bushing by first pressing

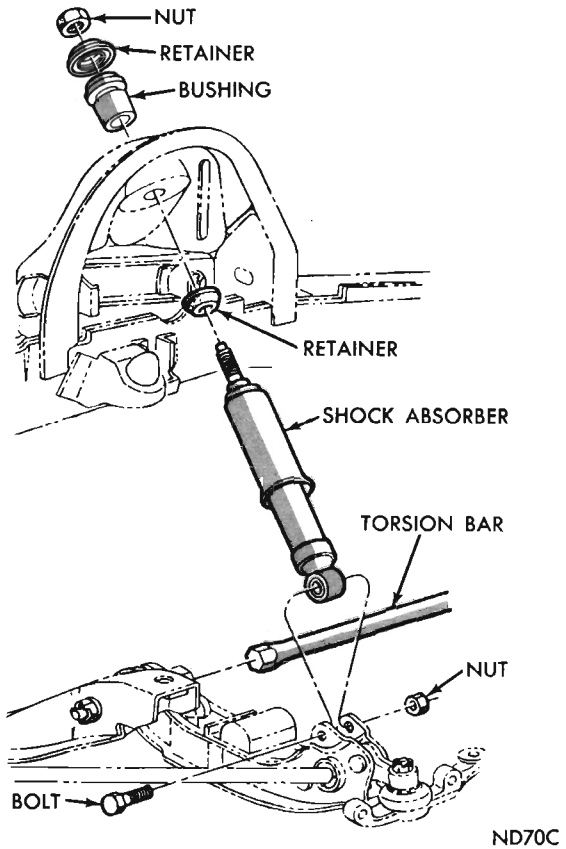

Fig. 2—Front Shock Absorber (Satellite)

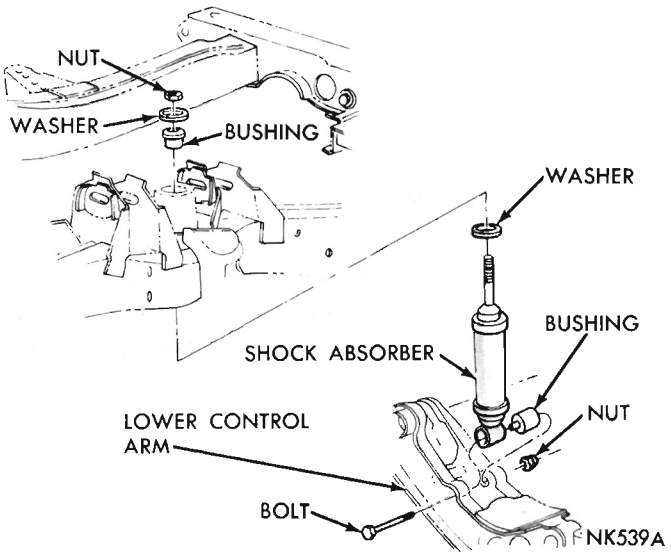

Fig. 3—Front Shock Absorber (Fury)

out inner sleeve with a suitable tool then prying out or cutting out the rubber bushing. (This bushing will take some set after it has been in service and should be replaced once it has been removed).

(5) If lower bushing requires replacement, remove it from shock absorber using Tool C-3553 by pressing on the outer sleeve of bushing (Fig. 4).

Pressing on inner sleeve of lower bushing will not remove outer sleeve from the shock absorber. **New shock absorbers are furnished with the lower bushing installed; however, bushings are furnished separately for service installation.** Test and expel air from shock absorber before installation.

Testing and Expelling Air

(1) With shock absorber removed, extend fully in an upright position.

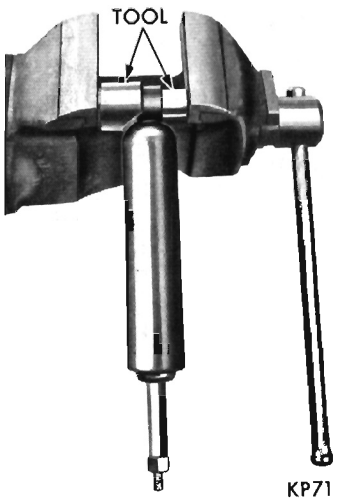

Fig. 4—Removing or Installing Shock Absorber Bushing

(2) Inspect for evidence of fluid running from the upper end of reservoir. (Actual leakage will be a stream of fluid running down the side and dripping off lower end of unit. A slight amount of seepage is not unusual and does not affect performance.)

(3) Test for low fluid level or air trapped in cylinder, by holding shock absorber in its normal vertical position and alternately extending and compressing unit. There should be no lost motion in either direction.

(4) Should lost motion be evident hold shock absorber in its normal vertical position and fully extend it.

(5) Invert unit and compress it. **Do not extend unit while inverted.**

(6) Repeat steps 4 and 5 several times to expel any air trapped in cylinder.

(7) Should lost motion persist, replace shock absorber. Repeat operation 4 and 5 prior to installation of a new shock absorber. (New shock absorbers may have a greater resistance than an old one due to friction of new seal.)

Installation

(1) To install upper rubber bushing, remove inner steel sleeve and immerse bushing in water (DO NOT use oil or soap) and with a twisting motion, start bushing into hole of upper mounting bracket, then tap into position with a hammer. Reinstall steel inner sleeve in bushing.

(2) Install lower mounting bushing in eye of shock absorber using Tool C-3553 (Fig. 4).

(3) Test and expel air from shock absorber, then, compress to its shortest length. Position washer on upper rod of shock absorber and insert rod through upper bushing and install upper compression washer and nut and tighten to 25 foot-pounds.

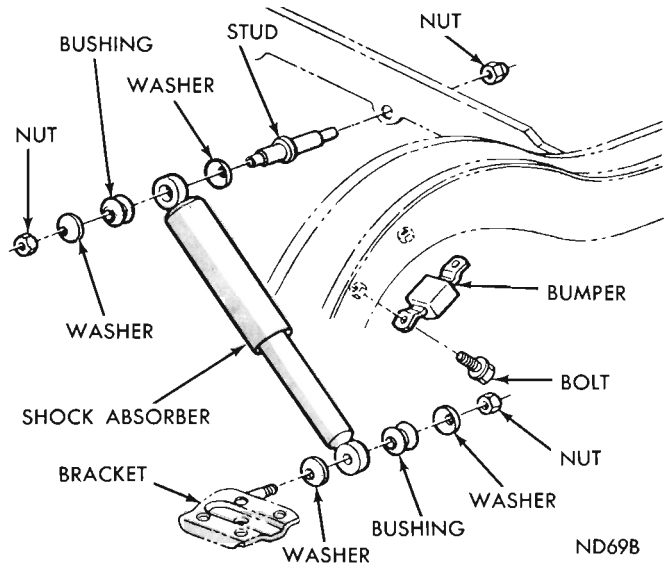

Fig. 5—Rear Shock Absorber (Valiant-Barracuda)

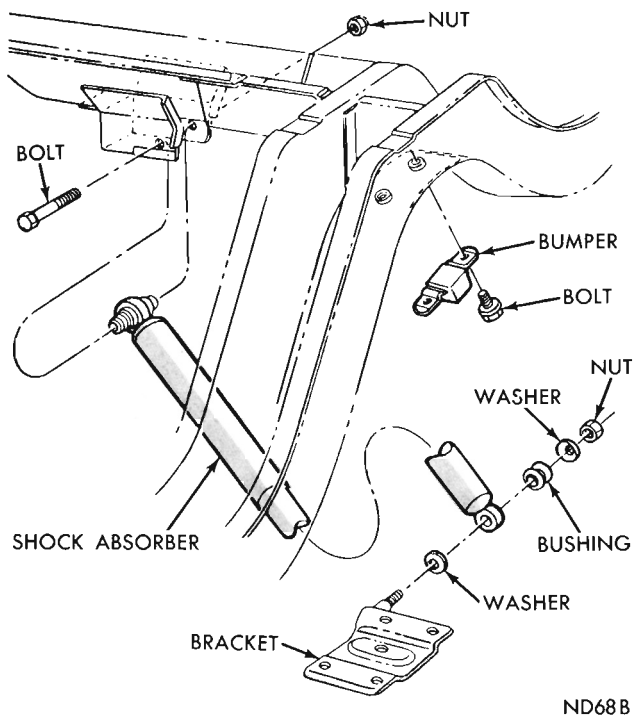

Fig. 6—Rear Shock Absorber (Satellite)

(4) Position and align lower eye of shock absorber with that of lower control arm mounting holes. Install bolt (from rear side only on Valiant) and nut and tighten to 50 foot-pounds with the full weight of vehicle on the wheels.

Rear-Removal (Figs. 5, 6 and 7)

(1) Raise vehicle on hoist to a comfortable working position.

(2) Using floor stands under axle assembly, raise axle to relieve load on shock absorber.

(3) Loosen and remove nut and washer attaching shock absorbers to spring plate mounting stud and remove shock absorber from stud.

(4) Loosen and remove nut and bolt from upper shock absorber mounting, and remove shock absorber. (Valiant remove nut and washer and remove shock absorber).

(5) Inspect appearance of shock absorber mounting bushings and if they appear damaged or deteriorated, remove and replace.

(6) Test and expel air from shock absorber before installation, see "Testing and Expelling Air" procedure.

Installation

(1) On Plymouth models position and align upper eye of shock absorber with mounting holes in crossmember and install bolt and nut. Valiant models position washer on shock absorber mounting stud and

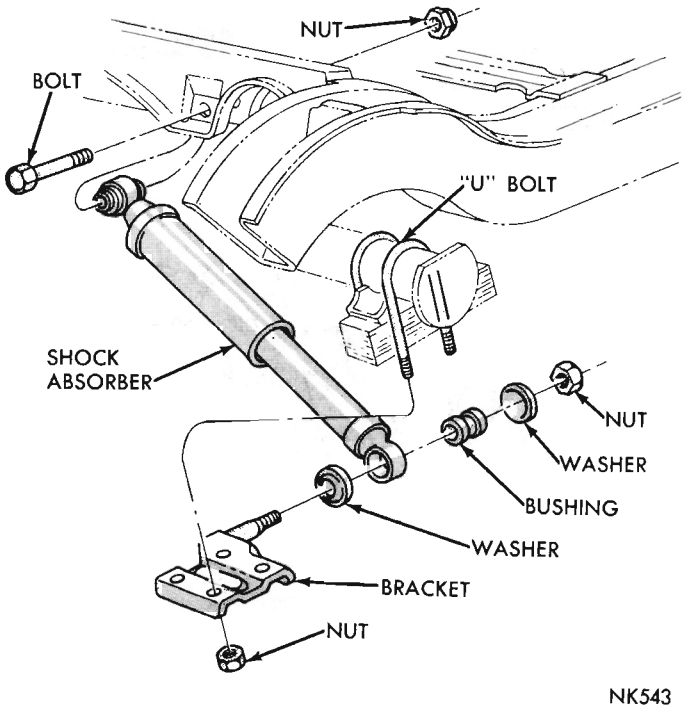

Fig. 7—Rear Shock Absorber (Fury)

install shock absorber on stud followed by remaining cupped washer and nut.

(2) Position washer on shock absorber mounting stud and install shock absorber on stud followed by remaining cupped washer and nut.

(3) **Lower vehicle until full weight of vehicle is on the wheels.** Tighten upper nut 70 foot-pounds, (Valiant-Barracuda 50 foot-pounds). Tighten lower nut 50 foot-pounds.

REAR SPRINGS (Figs. 8, 9 and 10)

Measuring Spring Height

When measuring rear spring heights, vehicle should be placed on a level floor, have correct front

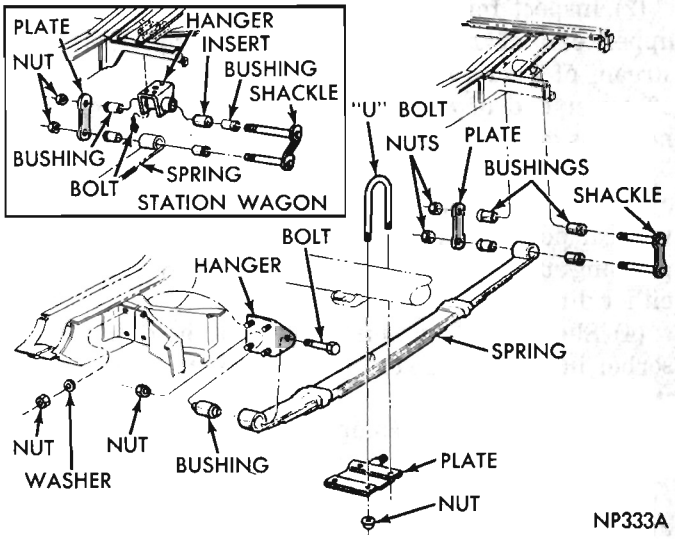

Fig. 9—Rear Spring (Satellite)

suspension height on both sides, correct tire pressures, no passenger or luggage compartment load and a full tank of fuel.

(1) Jounce car several times (front bumper first). Release bumpers at same point in each cycle.

(2) Measure shortest distance from highest point on underside of rear axle bumper strap (at rear of bumper) to top of axle housing.

(3) Measure both right and left sides.

If these measurements vary by more than 3/4 inch (side to side), it is an indication that one of the rear springs may need replacing.

It is normal for rear springs to show some reverse arch, even with no load, so appearance alone should not be reason for spring replacement.

REPLACEMENT

Removal

(1) Raise vehicle on hoist to a comfortable working position.

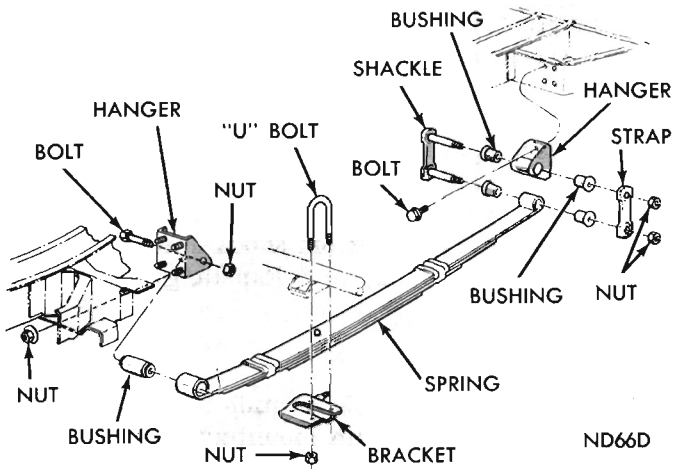

Fig. 8—Rear Spring (Valiant-Barracuda)

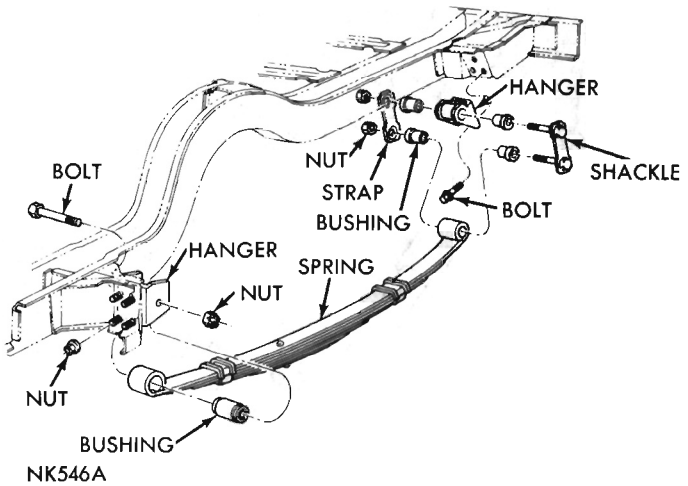

Fig. 10—Rear Spring (Fury)

(2) Using floor stands under axle assembly, raise axle assembly to relieve weight on rear spring.

(3) Disconnect rear shock absorber at spring plate lower mounting stud. Lower axle assembly, permitting rear springs to hang free.

(4) Loosen and remove "U" bolt nuts and remove "U" bolts and spring plate.

(5) Loosen and remove the nuts holding front spring hanger to body mounting bracket.

(6) Loosen and remove rear spring hanger bolts and let spring drop far enough to pull front spring hanger bolts out of body mounting bracket holes.

(7) Loosen and remove front pivot bolt from front spring hanger.

(8) Loosen and remove shackle nuts and remove shackle from rear spring.

Installation

Inspect rear spring front pivot bolt bushing and if necessary, replace bushing, see "Pivot Bushing Replacement" procedure.

(1) Assemble shackle and bushings in rear of spring and rear spring hanger. (**Do not lubricate rubber bushings.**) Start shackle bolt nut. **Do not tighten.**

(2) Assemble front spring hanger to front spring eye and install pivot bolt and nut. **Do not tighten.**

(3) Position rear spring hanger to body bracket and install bolts and tighten bolts to 30 foot-pounds.

(4) Raise the spring and start the spring hanger bolts in mounting bracket holes (light leverage such as mechanics shoulder under spring might be necessary to position spring hanger studs in mounting bracket holes). Install nuts and tighten to 30 foot-pounds.

(5) Lower axle assembly into correct position with axle centered over spring center bolt.

(6) Correctly position the lower spring plate and install "U" bolts and nuts and tighten nuts 40 foot-pounds (Valiant and Satellite with 7-1/4" axle) and 45 foot-pounds (all other models). **Do not over tighten "U" bolt nuts.**

(7) Install shock absorber on stud and tighten nut 50 foot-pounds.

(8) Lower vehicle to floor and with full weight of vehicle on the wheels, tighten pivot bolts and/or nuts 85 foot-pounds on 6 cylinder (Valiant), and 125 foot-pounds on all other models. Tighten shackle nuts 45 foot-pounds (Satellite and Fury), 30 foot-pounds (Valiant).

(9) It is recommended that after a rear spring has been replaced, that the vehicle be driven and the front suspension heights be remeasured and corrected if necessary.

Pivot Bushing Replacement

The removal of old bushings and installation of new bushings is performed in one operation, using Tool C-3709, (8 Cylinder models) or Tool C-3729 (6 Cylinder models) (Fig. 11).

(1) Raise vehicle on hoist to a comfortable working position.

(2) Using floor stands under axle assembly, raise axle assembly to relieve weight on rear spring.

(3) Disconnect rear shock absorber at spring plate lower mounting stud. Lower axle assembly, permitting rear springs to hang free.

(4) To replace front pivot bushing, remove rear spring front hanger from body bracket. Remove pivot bolt and hanger from spring.

(5) Place new bushings on Tool C-3709 (8 Cylinder models) or Tool C-3729 (6 Cylinder models) (Fig. 11). Arrange tool in spring eye, then press out old bushing while pressing new bushing in one operation.

(6) Assemble front hanger to spring but do not tighten pivot bolt nut until full weight of vehicle is on wheels.

(7) Attach spring hanger to body bracket and tighten mounting bolts to 30 foot-pounds.

(8) To replace rear spring shackle bushings remove rear spring hanger from body bracket. Remove shackle, then slide bushings out of spring and hanger.

(9) Insert new bushings in spring and hanger then assemble shackle and hanger on spring. Start shackle bolt nuts.

(10) Attach hanger to body bracket and tighten mounting bolt to 30 foot-pound.

(11) Lower vehicle to floor and with full weight of vehicle on the wheels, tighten pivot bolts and/or nuts 85 foot-pounds on 6 cylinder (Valiant), and 125 foot-pounds on all other models. Tighten shackle nuts 45 foot-pounds (Satellite, Fury), 30 foot-pounds (Valiant).

(12) Reinstall shock absorber on spring plate stud and tighten to 50 foot-pounds.

Spring Interliner Replacement

Removal

(1) Raise vehicle on hoist to a comfortable working position.

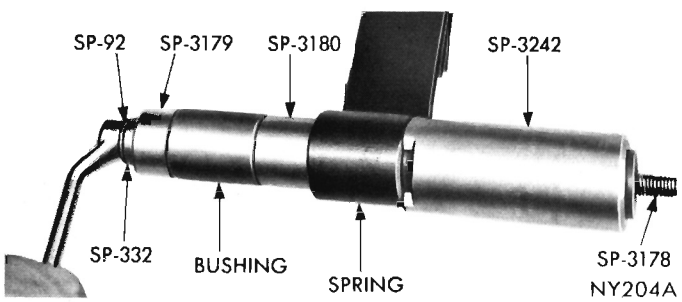

Fig. 11—Pivot Bushing Replacement

(2) Using floor stands under axle assembly, raise axle assembly to relieve weight on rear spring.

(3) Disconnect rear shock absorber at spring plate lower mounting stud. Lower axle assembly, permitting rear springs to hang free.

(4) Remove spring alignment clips and discard. (On Fury station wagon models, retain clips for reinstallation).

(5) Using a tapered pry bar or screwdriver, separate spring leaves and remove interliners.

(6) Keeping spring leaves separated, clean mating area of both spring leaves thoroughly. **If rust or corrosion is evident, wrap fine sandpaper around a flat file or putty knife and sand until area is smooth and clean.**

(7) With spring leaves still separated, insert new interliner with retaining buttons in alignment with locating holes.

(8) Press retaining buttons into retainer holes and remove pry bar or screwdriver from spring leaves.

(9) Repeat above procedure for balance of interliners. **(Do not lubricate interliners.)**

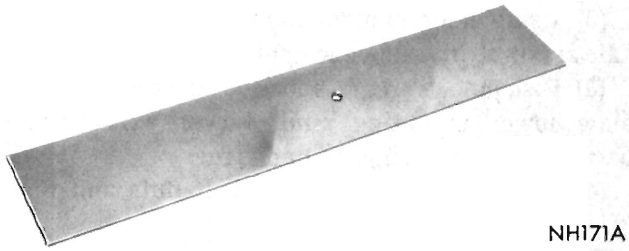

Fig. 12—Zinc Interleaf

(10) Install new alignment clips, (On Fury station wagon models, reinstall old clips).

(11) Reinstall shock absorber on spring plate stud and install washer and nut, tighten to 50 foot-pounds.

(12) Lower vehicle onto its wheels.

Zinc Interleaf

To remove or install zinc interleaves (Fig. 12) between spring leaves, it will be necessary to remove center bolt and disassemble spring leaves. Tighten spring center bolt nut 10 foot-pounds.

SPECIFICATIONS

	Barracuda-Valiant	Satellite	Fury
REAR SPRINGS			
Type		Semi-Elliptical	
NUMBER OF LEAVES			
Standard (170 C.I. Engine)	4	—	—
(225 C.I. Engine)	5	4-1/2	5
(273, C.I. Engine)	4-1/2	—	—
(318, 340 C.I. Engine)	6	4-1/2	5
(383 C.I. Engine)	6	4-1/2	5
(426 Hemi or 440 C.I. Engine)**	—	6,5-2/2	6
Heavy Duty	6	4-1/2	6
Station Wagon	—	5-1/2	6-1/2
Heavy Duty	—	5-1/2	6-1/2
Taxi	6	4-1/2	6
Police	6	6	6
LENGTH (Inches)	55	58	59
WIDTH (Inches)	2.50	2.50	2.50
MOUNTING			
Front		Pivot Rubber Bushing	
Rear		Shackle Rubber Bushing	
SHOCK ABSORBERS			
Type		Double Acting	
Mounting		Rubber Bushing	

** Models equipped with 426 Hemi or 440 C.I. engine use 6 full spring leaves on left side and 5 leaves plus two 1/2 leaves forward of axle on right side.

TIGHTENING REFERENCE

	Foot Pounds
REAR SPRINGS	
Center Bolt Nut	10
Front Hanger Nut	30
Pivot Bolt or Nut (Except Valiant 6 Cyl.)	125
Valiant 6 Cyl.	85
Rear Hanger Bolt	30
Shackle Nut—Satellite	45
Valiant	30
Fury	45
"U" Bolt Nut Valiant-Satellite 7-1/4" Axle	40
Valiant-Satellite-Fury 8-3/4" Axle	45
Satellite-Fury 9-1/4"-9-3/4" Axle	45
SHOCK ABSORBERS	
Front Lower Bolt Nut	50
—Upper Shaft Nut	25
Rear Lower Stud Nut	50
—Upper Bolt Nut (Except Valiant and Barracuda)	70
Stud Nut Valiant and Barracuda	50

STEERING

CONTENTS

	Page		Page
MANUAL GEAR	1	PUMPS	20
POWER GEAR	8	STEERING COLUMNS	33

MANUAL STEERING GEAR

INDEX

	Page		Page
Adjustments	2	Cross Shaft Oil Seal	7
General Information	1	Gear Installation	7
Service Diagnosis	1	Specifications	54
Gear Reconditioning	3	Tightening Reference	55
Gear Removal	3		

GENERAL INFORMATION

The manual steering gear (Fig. 1) is designed to provide easy steering with minimum friction in the steering gear. A ball nut travels up or down on the wormshaft, riding on recirculating balls acting as a screw thread.

The wormshaft and ball nut assembly is supported in the gear housing by an adjustable ball thrust type upper and lower bearing. The lower bearing cup is pressed into the gear housing, and the upper bearing cup is pressed into the wormshaft bearing adjuster.

The cross shaft is integral with the sector gear. The sector gear meshes with the rackteeth on the re-circulating ball nut. Adjustment at this point is controlled by the cross shaft adjusting screw which extends through the housing cover.

SERVICE DIAGNOSIS

Condition	Possible Cause	Correction
HARD STEERING	(a) Low or uneven tire pressure.	(a) Inflate tires to recommended pressures.
	(b) Insufficient lubricant in the steering gear housing or in steering linkage.	(b) Lubricate as necessary.
	(c) Steering gear shaft adjusted too tight.	(c) Adjust according to instructions.
	(d) Front wheels out of line.	(d) Align the wheels. See "Front Suspension."
	(e) Steering column misaligned.	(e) See "Steering Gear Alignment."
PULL TO ONE SIDE (Tendency of the Vehicle to veer in one direction only)	(a) Incorrect tire pressure.	(a) Inflate tires to recommended pressures.
	(b) Wheel bearings improperly adjusted.	(b) See "Front Wheel Bearing Adjustment."
	(c) Dragging brakes.	(c) Inspect for weak, or broken brake shoe spring, binding pedal.
	(d) Improper caster and camber.	(d) See "Front Wheel Alignment Group."
	(e) Incorrect toe-in.	(e) See "Front Wheel Alignment Group."
	(f) Grease, dirt, oil or brake fluid on brake linings.	(f) Inspect, replace and adjust as necessary.
	(g) Front and rear wheels out of alignment.	(g) Align the front wheels. See "Front Suspension Group."
	(h) Broken or sagging rear springs.	(h) Replace rear springs.
	(i) Bent suspension parts.	(i) Replace parts necessary.
WHEEL TRAMP (Excessive Vertical Motion of Wheels)	(a) Incorrect tire pressure.	(a) Inflate tires to recommended pressures.
	(b) Improper balance of wheels, tires and brake drums.	(b) Balance as necessary. See "Wheels and Tires."
	(c) Loose tie rod ends or steering connections.	(c) Inspect and repair as necessary.
	(d) Worn or inoperative shock absorbers.	(d) Replace shock absorbers as necessary.

Condition	Possible Cause	Correction
EXCESSIVE PLAY OR LOOSENESS IN THE STEERING WHEEL	(a) Steering gear shaft adjusted too loose or badly worn.	(a) Replace worn parts and adjust according to instructions.
	(b) Steering linkage loose or worn.	(b) Replace worn parts. See "Front Wheel Alignment."
	(c) Front wheel bearings improperly adjusted.	(c) Adjust according to instructions.
	(d) Steering arm loose on steering gear shaft.	(d) Inspect for damage to gear shaft and steering arm, replace parts as necessary.
	(e) Steering gear housing attaching bolts loose.	(e) Tighten attaching bolts according to tightening reference.
	(f) Steering arms loose at steering knuckles.	(f) Tighten according to tightening reference.
	(g) Worn ball joints.	(g) Replace ball joints as necessary. See "Front Suspension."
	(h) Steering gear adjustment too loose.	(h) Adjust worm bearing pre-load according to instructions.

SERVICE PROCEDURES

ADJUSTMENTS

Two adjustments are provided in the steering gear (Fig. 2). The worm bearing pre-load adjustment, and the ball nut rack sector gear mesh adjustment.

Before the correct adjustment can be made at the ball nut rack and the sector gear, it must be determined that the worm bearing pre-load is properly adjusted.

The worm bearing pre-load adjustment is controlled by the worm thrust bearing adjuster which threads into the housing at the upper end of the wormshaft.

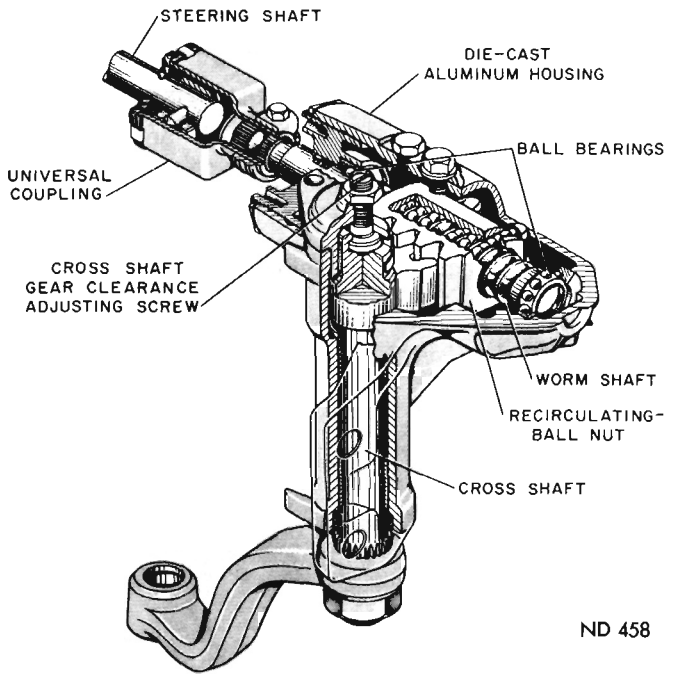

Fig. 1—Steering Gear Cross Section

Worm Bearing Pre-Load

(1) Disconnect steering gear arm from cross shaft with Tool C-3646 (Fig. 3).

(2) Remove horn button or horn ring.

(3) Loosen cross shaft adjusting screw lock nut, and back out adjusting screw approximately two turns. This will relieve any friction load which may be present at the closely meshed ball nut rack and sector gear teeth.

(4) Turn steering wheel two complete turns from straight ahead position, and place torque wrench Tool C-3380 on steering shaft nut.

(5) Rotate steering shaft at least one turn toward straight ahead position, while testing rotating torque with torque wrench.

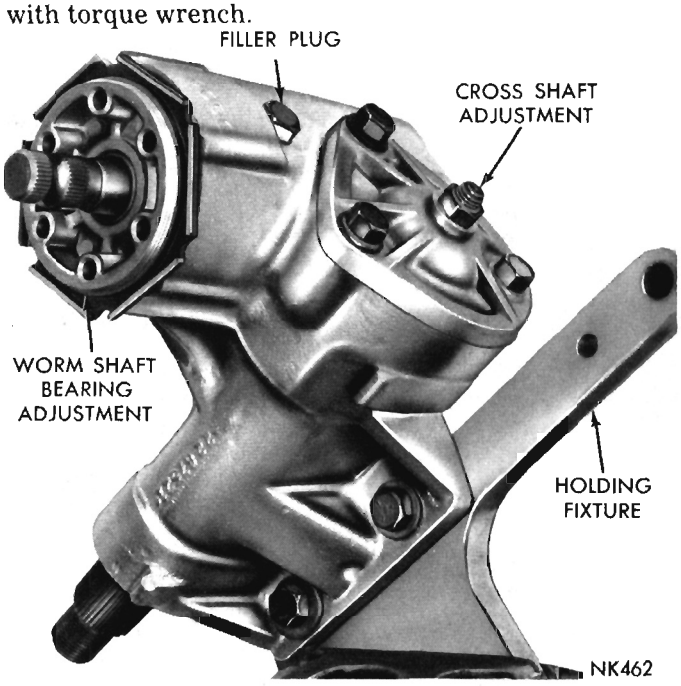

Fig. 2—Gear Adjustment Locations (Fury and V.I.P. Shown)

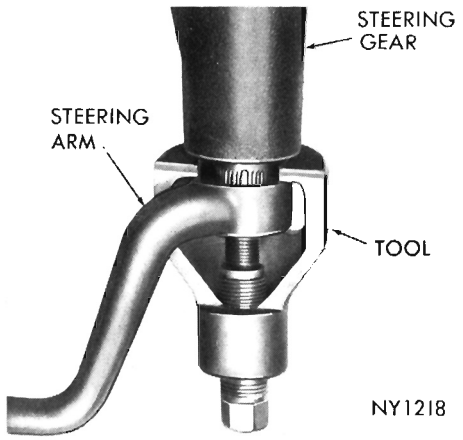

Fig. 3—Removing Steering Gear Arm

The torque required to keep wheel moving should be between 1-1/2 and 4-1/2 inch-pounds. If reading is not within these limits, adjustment can be made, in or out of the vehicle as follows:

(a) Loosen adjuster lock nut.

(b) Use adjuster wrench from Tool C-3884 set and turn adjuster clockwise to increase pre-load, or counterclockwise to decrease pre-load.

(c) While holding adjuster from turning, tighten lock nut securely, then retest worm bearing pre-load.

Ball Nut Rack and Sector Mesh

The cross shaft adjusting screw, located in housing cover, raises or lowers shaft to provide proper mesh load between tapered teeth of sector gear and tapered teeth of ball nut. **This adjustment can be accurately made only after proper worm bearing preload has been established.**

(1) Turn steering wheel gently from one stop all the way to the other, carefully counting number of turns. Turn steering wheel back exactly half way, to center position.

(2) Turn cross shaft adjusting screw clockwise to take out all lash between ball nut rack and sector gear teeth, then tighten adjusting screw lock nut to 35 foot-pounds.

(3) Turn steering wheel about 1/4 turn away from center of "high spot" position. Then, using torque wrench Tool C-3380, at steering wheel nut, measure torque required to rotate steering wheel through high spot at center position. The reading should be between 8 and 11 inch-pounds. This represents the total of worm shaft bearing pre-load and ball nut rack and sector gear mesh load. Readjust cross shaft adjustment screw if necessary, to obtain proper torque reading.

(4) After adjustments have been completed, place front wheels in a straight ahead position, and with steering gear and steering wheel centered, install steering arm on cross shaft.

(5) Tighten steering arm retaining nut to 175 foot-pounds.

GEAR REMOVAL

The manual steering gear can be removed without removing the steering column assembly.

(1) From under vehicle, remove steering gear arm retaining nut and lock washer. Remove arm with Tool C-3646 (Fig. 3).

(2) Remove steering shaft lower coupling to worm-shaft roll pin.

(3) Disconnect shift linkage on all models equipped with column mounted transmission gear selectors.

(4) Loosen steering column to instrument panel clamp nuts far enough to disengage tab on clamp from slot in underside of column jacket. Slide column assembly up far enough to disengage coupling from wormshaft.

CAUTION: Care is required to avoid scratching column jacket when sliding up and down in clamp.

(5) **Valiant Models - 273 Cu. In. Engine** - From under vehicle, remove left front engine mount stud nut and washer. Using a suitable jack, raise engine approximately 1-1/2 inches. Remove starter from engine. After removing three steering gear mounting bolts, lower gear through opening.

Satellite Models - 426 Cu. In. Engine - Remove battery and battery tray. Remove left front engine mount stud nut and washer. Using a suitable jack, raise engine approximately 1-1/2 inches. After removing three steering gear mounting bolts, rotate gear forward between cylinder head and shock absorber tower, up through opening left by battery tray removal.

Satellite and Fury Models - 273, 318, 383 and 440 Cu. In. Engines - Remove three steering gear mounting bolts and lower gear from under vehicle.

All 6 Cylinder Models - Remove steering gear mounting bolts and remove gear through engine compartment.

Gear Reconditioning

Thoroughly clean entire outside surface of steering gear before disassembly to avoid contaminating wormshaft and ball nut assembly with dirt or grit.

(1) Attach steering gear to holding fixture, Tool C-3323 and install holding fixture in a vise (Fig. 2).

(2) Loosen cross shaft adjusting screw lock nut, and back out screw about two turns to relieve load caused by close mesh between ball nut rack and sector gear teeth. **Remove cross shaft seal as outlined in "Cross Shaft Oil Seal Replacement."**

(3) Position steering wormshaft in straightahead position.

(4) Remove bolts from cross shaft cover and slowly remove cross shaft while sliding arbor Tool C-3875 for Satellite and Valiant 8 cylinder models and Tool C-3786 for Fury models into housing (Fig. 4). **The**

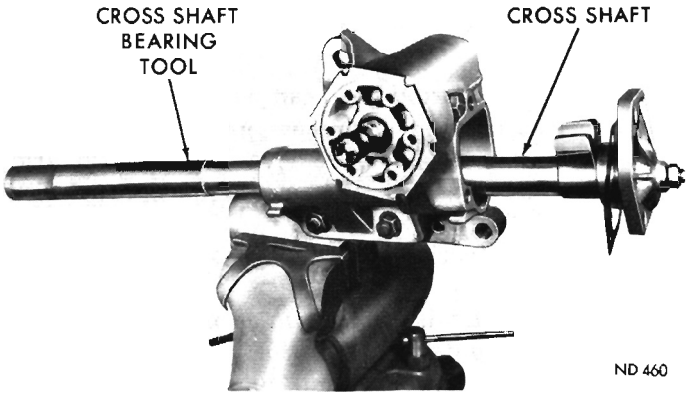

Fig. 4—Removing Cross Shaft (Satellite Shown)

arbor tool is not necessary on Valiant and Barracuda 6 cylinder models.

(5) Remove lock nut from cross shaft adjusting screw and remove screw from cover by turning screw clockwise.

(6) Slide adjustment screw and shim out of slot in end of cross shaft.

(7) Loosen wormshaft bearing adjuster lock nut with a soft drift and remove lock nut. Hold wormshaft from turning while unscrewing adjuster, using tool wrench from Tool Set C-3884 (Fig. 5).

(8) Slide wormshaft adjuster off shaft.

CAUTION: The adjuster must be handled carefully to avoid damage to aluminum threads.

Be careful that the ball nut does not run down to either end of the wormshaft as the ball guide ends can be damaged if the ball nut is allowed to rotate until stopped at the end of the worm.

(9) Carefully remove worm and ball nut assembly (Fig. 6).

The ball nut and wormshaft are serviced as an assembly only, and are not to be disassembled. Do not remove or disturb ball return guides. **Place ball nut and wormshaft assembly in a clean place.**

(10) Remove cross shaft needle bearing (if so

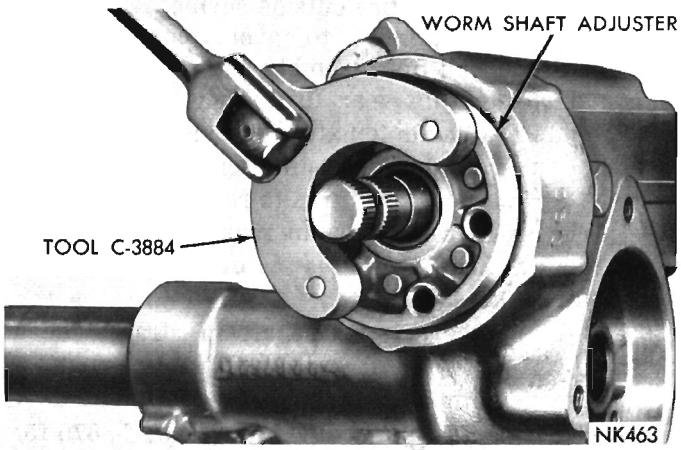

Fig. 5—Removing Worm Shaft Adjuster (Fury and V.I.P. Shown)

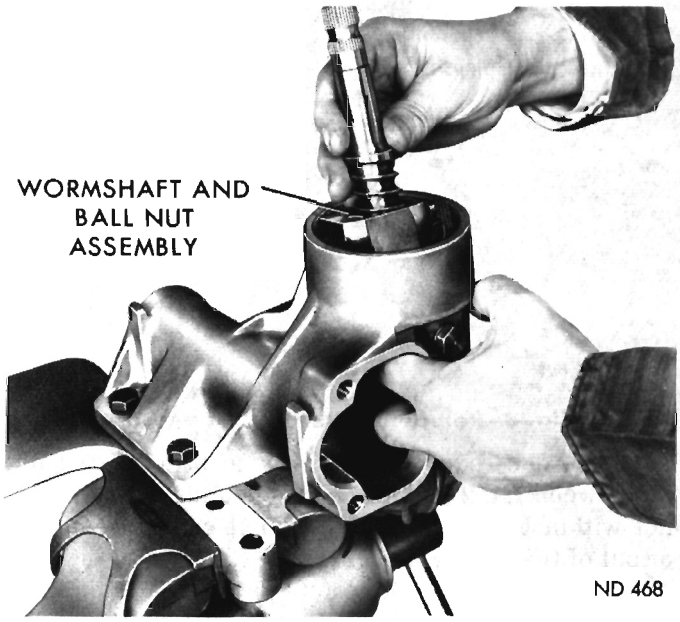

Fig. 6—Removing Worm Shaft and Ball Nut Assembly

equipped) by placing steering gear housing in an arbor press; insert Tool C-3875 for Satellite and Valiant 8 cylinder models and Tool C-3786 for Fury models with adapter ring in lower end of housing (Fig. 7) and press both bearings through housing. For Tool C-3786 no adapter ring is required.

CAUTION: The adapter ring must be used with remover and installer arbor Tool C-3875 otherwise bearings will be crushed.

Housings equipped with cross shaft bushings are serviced as an assembly only. The cross shaft cover

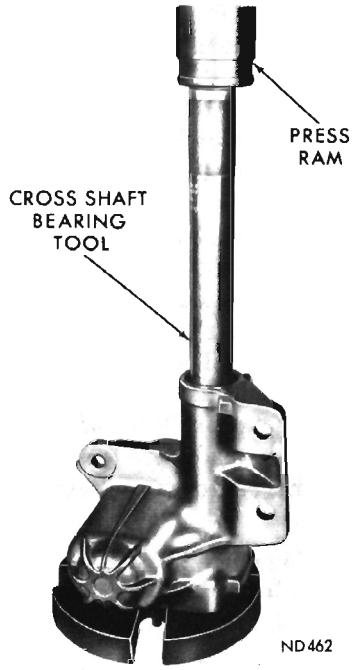

Fig. 7—Removing Cross Shaft Inner and Outer Bearings

assembly, including a needle bearing or bushing, is serviced as an assembly.

(11) Remove wormshaft oil seal from wormshaft bearing adjuster, by inserting a blunt punch behind seal and tap alternately on each side of seal until seal is driven out of adjuster.

(12) Remove wormshaft upper bearing cup for Satellite and Valiant models in same manner. For Fury models there is a spacer behind bearing cup. However, this must be done carefully to avoid cocking the bearing cup and distorting adjuster counterbore.

(13) Remove lower cup if replacement is necessary by positioning locking head jaws of remover Tool C-3868 (Fig. 8) behind the bearing cup and expanding remover head by pressing down on center plunger of tool. Withdraw bearing cup by turning remover screw nut in clockwise direction while holding center screw.

(14) Wash all parts in clean solvent and blow dry with compressed air.

(15) Test operation of ball nut assembly on wormshaft. If ball nut does not travel smoothly and freely on wormshaft and there is roughness or binding, assembly must be replaced.

(16) Extreme care is necessary when handling aluminum worm bearing adjuster to avoid damaging threads. It is equally important to avoid damaging mating threads in gear housing. The wormshaft adjuster must **never** be screwed into housing without lubrication, or when threads are dirty or damaged. These precautions **must** be taken to avoid "picking up" threads and ruining the housing and/or wormshaft bearing adjuster.

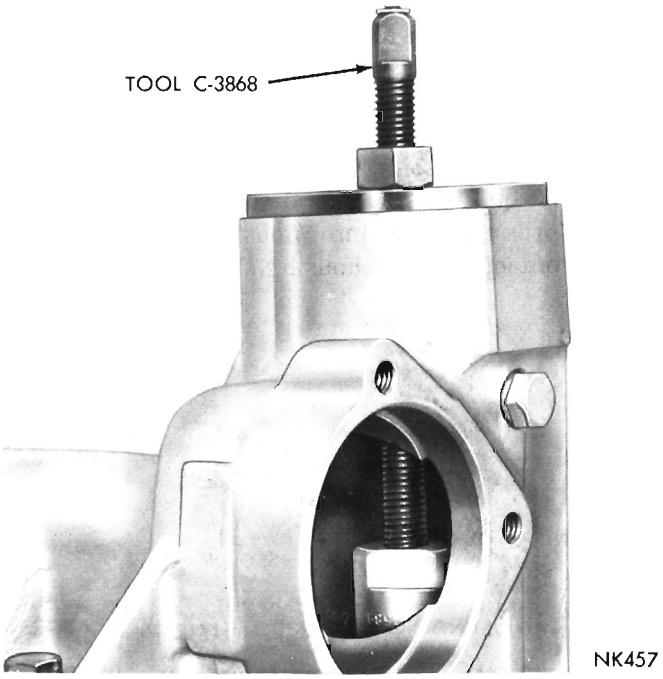

Fig. 8—Removing Lower Bearing Cup

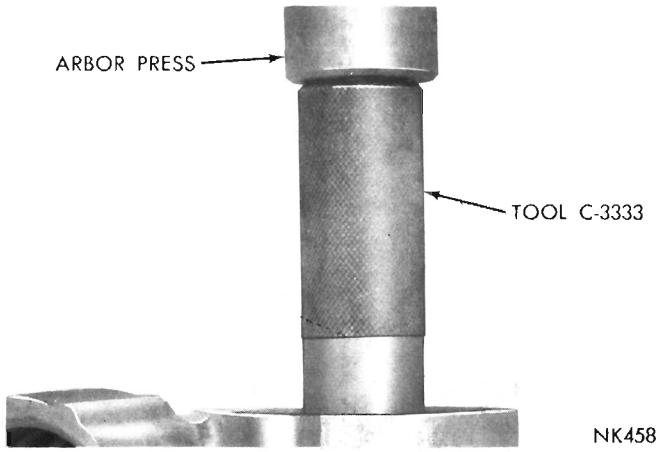

Fig. 9—Installing Inner Bearing

(17) Inspect cross shaft for wear and check fit of shaft in housing bearings. Inspect fit of shaft pilot in cover bearing. Make sure the wormshaft has not been bent or otherwise damaged.

(18) Cross shaft and wormshaft oil seals should be replaced when unit is reconditioned.

(19) Install cross shaft outer needle bearing by placing bearing on end of Tool C-3875 for Satellite and Valiant 8 cylinder models and Tool C-3333 for Fury models with adapter ring. Press bearing into housing to 7/16 inch below end of bore for Satellite models and 1/2 inch below for Fury models to provide space for oil seal.

CAUTION: The adapter ring must be used with remover and installer arbor Tool C-3875 for Satellite and Valiant 8 cylinder models and Tool C-3333 for Fury models, otherwise bearings will be crushed.

(20) Install inner needle bearing by placing bearing on Tool C-3875 with adapter ring for Satellite models and Tool C-3333 for Fury models (Fig. 9). Press bearing into inside end of housing bore flush with inside end of bore surface.

(21) To install wormshaft bearing cups, position cups in housing and bearing adjuster nut. Then press them in place with Tool C-3865 (Figs. 10 and 11).

(22) Install wormshaft oil seal by positioning seal in wormshaft adjuster with seal metal retainer **UP.** Drive seal into place with a suitable sleeve so it is slightly below end of bore in adjuster.

(23) Apply a coating of steering gear lubricant to all moving parts during assembly, also place lubricant on and around oil seal lips.

(24) Clamp holding fixture and housing in a vise with bearing adjuster opening upward.

(25) Place a thrust bearing in lower cup in housing.

(26) Hold ball nut from turning (Fig. 6), and insert wormshaft and ball nut assembly into housing with end of worm resting in thrust bearing.

(27) Place upper thrust bearing on wormshaft.

Thoroughly lubricate threads on adjuster and threads on housing.

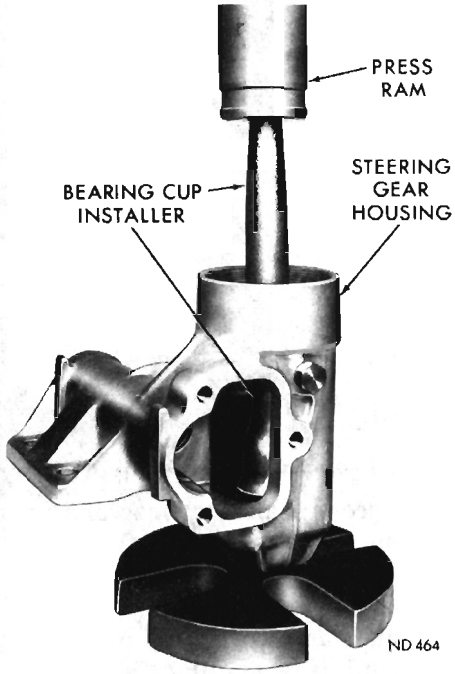

Fig. 10—Installing Wormshaft Lower Bearing Cup (All Models Except Fury and V.I.P. Shown)

(28) Place a protective sleeve of plastic tape over wormshaft splines so splines do not damage seal. Slide adjuster assembly over shaft.

(29) Thread adjuster into steering housing, and with Tool wrench C-3884 and splined nut set, tighten adjuster to 50 foot-pounds while rotating wormshaft. This is done to effectively seat bearings.

(30) Loosen adjuster so no bearing pre-load exists.

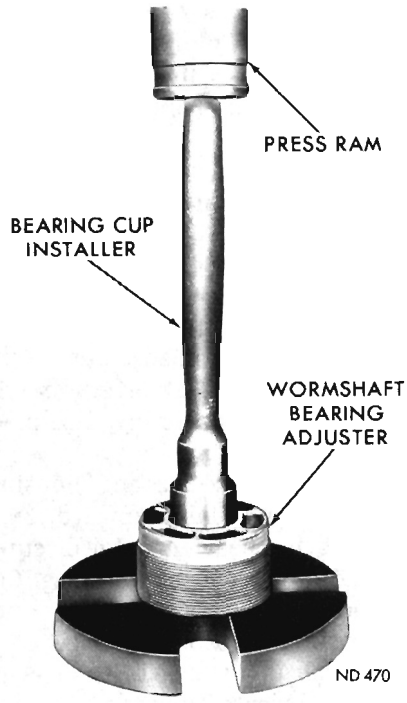

Fig. 11—Installing Wormshaft Upper Bearing Cup

Then, using torque wrench Tool C-3380, adjust wormshaft bearing pre-load from 1-1/8 to 4-1/2 inch-pounds.

(31) After adjusting preload, tighten bearing adjuster lock nut, and retest to be sure preload remains between 1-1/8 and 4-1/2 inch-pounds.

(32) Before installing cross shaft, pack wormshaft cavities in housing above and below the ball nut with steering gear lubricant. Use steering gear lubricant whenever possible, but if not available, a good grade of multi-purpose lubricant may be used. Do not use gear oil. When gear is properly packed with steering gear lubricant it will contain eleven fluid ounces of lubricant, and level of lubricant will be at top of worm.

(33) Slide cross shaft adjusting screw and shim into slot in end of shaft.

(34) Test end clearance (Fig. 12). The screw must be free to turn with zero to .004 inch end play. Three different thickness shims are available to obtain specified clearance.

(35) Start cross shaft and adjuster screw into bearing in housing cover. Then, using a screw driver through hole in cover, turn screw counterclockwise to pull shaft into cover.

(36) Install adjusting screw lock nut, but do not tighten at this time.

(37) Rotate wormshaft to centralize ball nut.

(38) Place new cover gasket on housing cover.

(39) Carefully install cross shaft and cover assembly into steering gear housing (Fig. 4). **Coat the cross shaft and sector teeth with steering gear lubricant before installing cross shaft in housing.**

(40) Make certain some lash exists between cross shaft sector teeth and ball nut rack then install and tighten the cover bolts to 25 foot-pounds.

(41) Position cross shaft seal on cross shaft with lip of seal facing gear housing. Place installing adapter SP-3828 from Tool C-3880 against seal with **short step** toward seal (Fig. 14). Position nut from Tool C-3880 on cross shaft and turn it down against adapter, pressing seal into housing until step on adapter contacts end of housing. Remove tool.

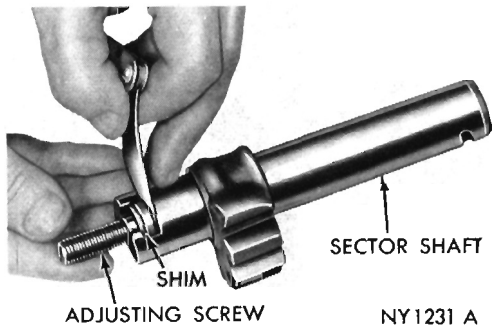

Fig. 12—Measuring Cross Shaft Adjusting Screw End Clearance

(42) Turn worm shaft about 1/4 turn away from center of "high-spot" position. Using torque wrench C-3380 and 3/4 inch socket on worm shaft spline, check torque required to rotate shaft through high spot at center position. The reading should be between 8 and 11 inch pounds. Readjust cross shaft adjusting screw as necessary to obtain proper torque reading. Tighten lock nut to 35 foot-pounds and recheck cross shaft torque.

GEAR INSTALLATION

(1) Slide steering column assembly upward to where column coupling will clear end of wormshaft to permit installation of steering gear.

(2) **Valiant Models - 273 Cu. In. Engine** - From under vehicle, work steering gear up through opening between torsion bar and cylinder block. Install three mounting bolts and tighten to 100 foot-pounds. Lower engine onto mounting pad and install lock washer and engine mount stud nut. Install starter.

Satellite Models - 426 Cu. In. Engine

Position steering gear in vehicle by carefully rotating rearward between cylinder head and shock absorber tower. Install three mounting bolts and tighten to 100 foot-pounds. Lower engine onto mounting pad and install lock washer and engine mount stud nut. Install battery tray and battery.

Satellite and Fury Models - 273, 318, 383 and 440 Cu. In. Engine

From under vehicle position steering gear on mounting bracket and install three mounting bolts. Tighten to 100 foot-pounds.

All 6 Cylinder Models

Lower steering gear down through engine compartment to mounting bracket. Install three mounting bolts and tighten to 100 foot-pounds.

(3) Align master spline on wormshaft with master spline in coupling and slide steering column assembly down far enough to engage coupling with wormshaft.

(4) Install coupling pin.

(5) Install and adjust column as outlined in "Column" section of manual.

CROSS SHAFT OIL SEAL REPLACEMENT

The cross shaft oil seal may be replaced by the following procedure either on the bench, or without removing steering gear from vehicle.

CAUTION: When replacing oil seal in vehicle, clean the exposed portion of cross shaft to help prolong oil seal life.

(1) Remove steering gear arm retaining nut and lock washer. Remove arm with Tool C-3646 (Fig. 3).

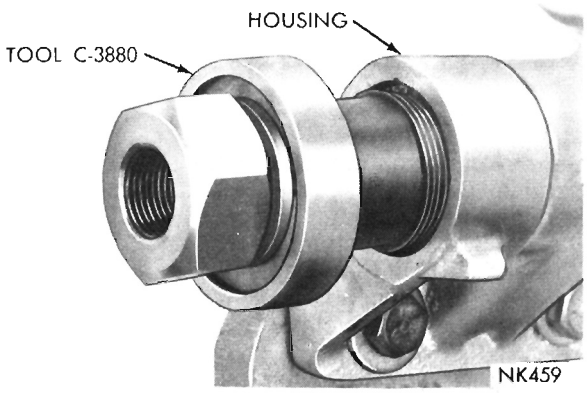

Fig. 13—Removing Cross Shaft Oil Seal

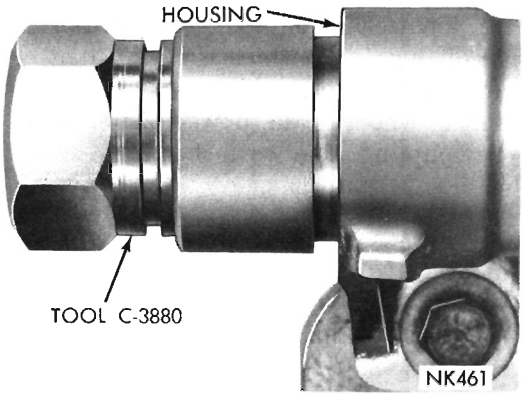

Fig. 14—Installing Cross Shaft Oil Seal

Use Tool C-3880 to service cross shaft seal. The tool consists of adapter SP-3056; half rings SP-1932 and nut SP-3610.

(2) Slide threaded adapter over end of cross shaft and install nut portion of tool on shaft. (Fig. 13). Maintain pressure on adapter with tool nut while screwing adapter into seal until it grips oil seal firmly. Place two half rings and retainer over both portions of tool. Turn tool nut counterclockwise to withdraw seal from housing.

(3) Place seal onto splines on cross shaft with lip of seal facing gear housing.

(4) Place installing adapter SP-3052 from Tool C-3880 against seal. Press seal in until a gap of 1/4 inch exists between adapter and housings (Fig. 14).

(5) Place nut down from Tool Set C-3880 on cross shaft, and turn it down against adapter, pressing seal into housing until step on adapter contacts end of housing.

(6) Remove tool, install steering arm, lock washer and retaining nut and tighten nut to 175 foot-pounds.

POWER STEERING GEAR

INDEX

	Page		Page
General Information	8	Final Tests and Adjustments	19
Service Diagnosis	8	Gear Reconditioning	13
Service in Vehicle	10	Installation	20
Gear Shaft Adjustment	10	Removal	13
Gear Shaft Oil Seal Replace	11	Worm Shaft Oil Seal Replace	20
Valve Body Recondition	10	Specifications	54
Service Out of Vehicle	12	Tightening Reference	55

GENERAL INFORMATION

The power steering gear (Figs. 1 and 2) consists of a gear housing containing a gear shaft with sector gear, a power piston with gear teeth broached into the side of the piston which is in constant mesh with the gear shaft sector, and a wormshaft connecting the steering wheel to the power piston through a U-joint type coupling. The wormshaft is geared to the piston through recirculating ball contact. The steering valve, mounted on top of the steering gear, directs the flow of fluid in the system.

Fluid is supplied to the steering gear, by an engine driven constant displacement type pump through a pressure hose. Oil is returned to the pump reservoir from the steering gear through a return hose.

SERVICE DIAGNOSIS

Condition	Possible Cause	Correction
HARD STEERING	(a) Tires not properly inflated.	(a) Inflate tires to recommended pressures.
	(b) Low oil level in pump reservoir (usually accompanied by pump noise).	(b) See "Fluid Level," Power Steering Pump.
	(c) Loose pump belt.	(c) See "Group 7—Cooling."
	(d) Improper caster and camber.	(d) See "Front Wheel Alignment" Front Suspension Group 2.
	(e) Power steering output low.	(e) Pressure test pump.
	(f) Steering linkage binding.	(f) Repair and lubricate as necessary.
	(g) Steering gear malfunctions.	(g) Adjust or repair as follows:
	1. Gear shift adjustment too tight.	1. See "Gear Shaft Adjustment."
	2. Faulty or damaged valve lever.	2. Repair as necessary.
	3. External leakage.	3. Inspect for leakage at the lower sector shaft oil seal; the sector shaft cover "O" ring.
	4. Excessive internal leakage.	4. Recondition steering gear.
POOR RECOVERY FROM TURNS	(a) Tires not properly inflated.	(a) Inflate tires to recommended pressures.
	(b) Steering linkage binding.	(b) Repair and lubricate as necessary.
	(c) Improper wheel alignment.	(c) See "Front Wheel Alignment," Front Suspension Group 2.
	(d) Damaged steering tube bearing.	(d) Remove jacket tube and replace bearings.
	(e) Steering wheel column jacket and steering nut improperly aligned.	(e) See "Gear Installation."
	(f) Steering gear malfunctions.	(f) Adjust or repair as follows:
	1. Improper gear shaft adjustment.	1. See "Gear Shaft Adjustment."
	2. Column support spanner nut loose.	2. Repair as necessary.
	3. Damaged valve lever.	3. Repair as necessary.
	4. Improper worm thrust bearing adjustment.	4. Recondition steering gear.
	5. Worn or damaged cylinder head worm seal ring or faulty worm piston ring.	5. Recondition steering gear.
	6. Burrs or nicks in the reaction ring grooves in the cylinder head or column support.	6. Repair as necessary.

Condition	Possible Cause	Correction
	7. Dirt or chips in the steering gear unit.	7. Recondition steering gear.
	8. Rough worm in the piston assembly.	8. Recondition steering gear.
	9. Valve binding.	9. Replace valve assembly.
CAR LEADS TO EITHER SIDE	(a) Tires not properly inflated.	(a) Inflate tires to recommended pressures; See "Wheels and Tires."
	(b) Improper wheel alignment.	(b) See "Front Suspension, Front Wheel Alignment." Group 2.
	(c) Valve body out of adjustment.	(c) If vehicle leads to the left, move the steering valve housing up on the steering housing. If vehicle leads to the right, move the steering valve housing down on the steering housing.
	(d) Valve lever damaged.	(d) Repair as necessary.
	(e) Column support spanner nut loose.	(e) Repair as necessary.
	(f) Coupling not centered.	(f) Center coupling. Refer to "Gear Installation."
	(g) Internal leakage in the steering gear valve body.	(g) Replace the steering gear valve body assembly.
TEMPORARY INCREASES IN EFFORT WHEN TURNING STEERING WHEEL TO THE RIGHT OR LEFT	(a) Oil level low in pump reservoir.	(a) See "Fluid Level."
	(b) Loose pump belts.	(b) See "Group 7—Cooling."
	(c) Oil on pump belt.	(c) Replace the belt and adjust.
	(d) Binding steering linkage.	(d) Lubricate and repair as necessary.
	(e) Engine idle too slow.	(e) See "Fuel Specifications." Group 14.
	(f) Air in the system.	(f) Work the steering wheel from right to left until the air is expelled.
	(g) Power steering pump output low.	(g) See Diagnosis "Hard Steering" correction (e).
	(h) Gear malfunction.	(h) Adjust and repair as outlined under "Hard Steering"—condition and correction (g).
NOISES	(a) Buzzing noise in neutral and stops when the steering wheel is turned.	(a) Noisy pump, make pressure test and repair as necessary. Damaged hydraulic lines or interference of the hoses with components attached to the fender shield. Air in system; work steering wheel from right to left until the air is expelled.
	(b) Chucking noise. Cause as follows:	(b) Correct as follows:
	1. Improper gear shaft adjustment.	1. See "Gear Shaft Adjustment."
	2. Improper worm shaft thrust bearing adjustment.	2. Recondition steering gear.
	3. Coupling loose on the worm shaft.	3. Inspect worm shaft splines for wear. Inspect coupling bolt for tightness, if loose, replace bolt and inspect worm shaft and coupling.
	4. Worn worm and piston assembly.	4. Replace worm and piston assembly.
	(c) Metallic clatter or hissing noise.	(c) Replace back pressure valve cushion.
	(d) Knocking condition at the bracket stop when the engine is running.	(d) Rubber stop worn or missing from pump bracket.
	(e) Loose pump belt.	(e) See Group 7 Cooling.
EXCESSIVE STEERING WHEEL FREE-PLAY	(a) Improper gear shaft adjustment.	(a) See "Gear Shaft Adjustment."
	(b) Column support spanner nut loose.	(b) Repair as necessary.
	(c) Improper worm thrust bearing adjustment.	(c) Repair as necessary.
	(d) Coupling loose on the worm shaft.	(d) Inspect wormshaft splines for wear.
	(e) Excessive worm-piston side play.	(e) Replace worm-piston assembly.
LACK OF ASSIST (One Direction)	(a) Oil leaking past worm shaft oil seal ring.	(a) Recondition steering gear.

Condition	Possible Cause	Correction
	(b) Broken or worn ring on worm piston.	(b) Recondition steering gear.
	(c) Piston end plug loose.	(c) Replace the worm and piston assembly.
	(d) Reaction seal missing.	(d) Remove the steering gear and repair as necessary.
LACK OF ASSIST (Both Directions)	(a) Pump belt slipping.	(a) See Group 7.
	(b) Pump output low.	(b) Pressure test pump.
	(c) Broken or worn ring on worm piston.	(c) Recondition steering gear.
	(d) Piston end plug loose.	(d) Replace the worm and piston assembly.

SERVICE PROCEDURES

SERVICE IN VEHICLE

Gear Shaft Adjustment

(1) Disconnect center link from steering gear arm.

(2) Start engine and run at idle speed.

(3) Turn steering wheel gently from one stop all the way to the other, counting number of turns. Then turn wheel back exactly half way, to center position.

(4) Loosen adjusting screw until backlash is evident in steering gear arm. Feel backlash by holding end of steering gear arm between thumb and forefinger with a light grip. Tighten adjusting screw until backlash just disappears.

Continue to tighten to 3/8 to 1/2 turn from this position and tighten lock nut to 50 foot-pounds to maintain this setting.

Valve Body Recondition

(1) Disconnect high pressure and return hoses at the valve body and tie the ends above the reservoir fluid level.

(2) Remove two screws attaching valve body to main gear housing.

(3) Lift valve body upward to disengage from valve lever (Fig. 8).

(4) Remove the two screws attaching control valve body to steering valve body and separate two bodies (Fig. 3).

(5) Remove outlet fitting, washer, spring, valve piston and cushion spring.

(6) Carefully shake out spool valve and inspect for nicks, burrs and scores. Do not remove valve body end plug unless inspection indicates a leak at gasket. **If**

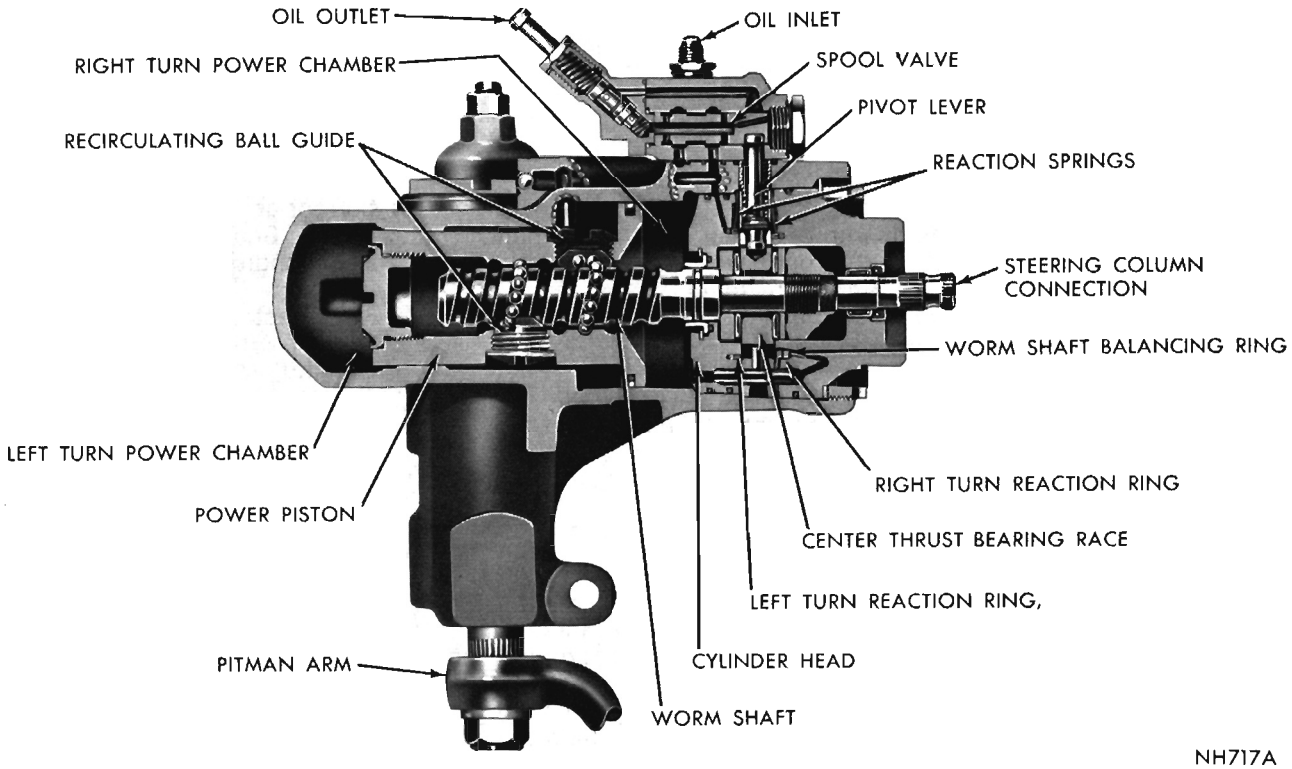

Fig. 1—Power Steering Gear

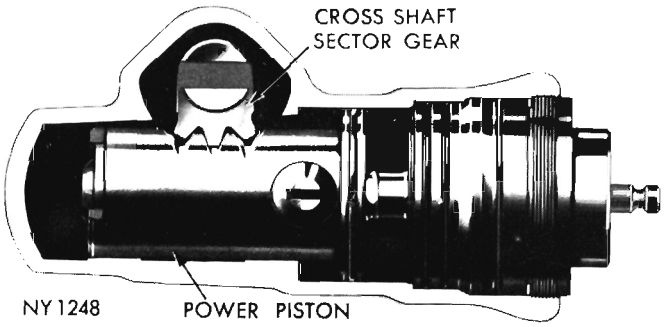

Fig. 2—Steering Gear Housing

spool valve or valve body is damaged, replace valve and body assembly.

Small burrs and nicks may be removed with crocus cloth if extreme care is used not to round off sharp edges of valve. The sharp edge is vitally important to operation of this valve.

(7) Clean valve bodies and valve piston thoroughly in clean solvent. Blow out all passages with compressed air. Lubricate pistons and bores with power steering fluid.

(8) Install steering spool valve in valve body so valve lever hole is aligned with lever opening in valve body. Valve must be perfectly free in valve body without sticking or binding (Fig. 3).

(9) Install a new gasket on end plug (if removed). Tighten plug to 25 foot-pounds.

(10) Install piston cushion spring in control valve body being sure it seats in counterbore at bottom of housing. Lubricate piston and insert nose end of piston into body bore. Test for smooth operation. Be sure cushion spring is not cocked.

(11) Install spring on top of piston, compress spring and install brass washer and fittings. Tighten to 20 foot-pounds.

(12) Position two new "O" rings on control valve body and attach to steering valve body. Tighten the two attaching screws to 95 inch-pounds.

(13) If pressure inlet fitting has been removed, tighten fitting to 30 foot-pounds.

(14) Align lever hole in valve spool with lever opening in valve body.

(15) Install gear housing making sure the valve lever enters hole in valve spool and key section on bottom of valve body nests with the keyway in housing.

CAUTION: These parts should go together with relative ease. Use of force may damage the lever. If they do not go together easily, lift off valve assembly, realign valve spool hole with lever opening in valve body and install valve body.

(16) Install two screws and tighten to 7 foot-pounds to prohibit leakage during valve centering operation.

(17) Connect high pressure and return hoses to

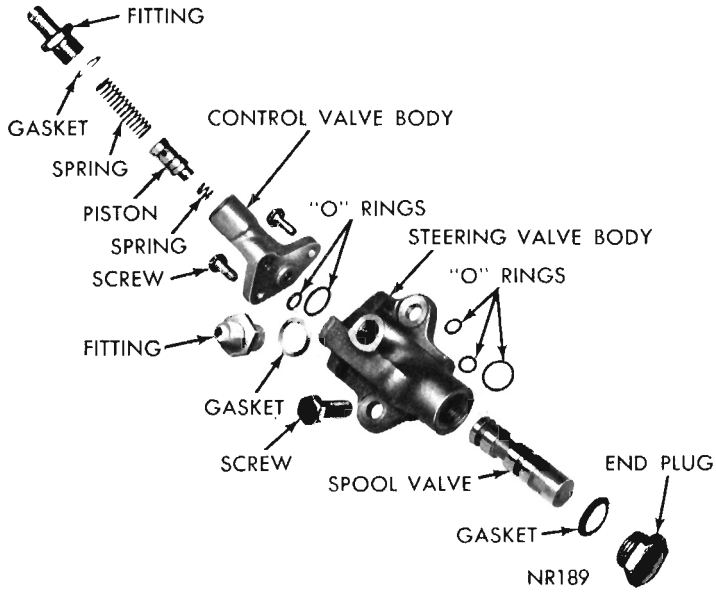

Fig. 3—Valve Body (Disassembled View)

valve body.

(18) Start engine. If unit is self-steering tap the valve up or down to correct. **When tapping valve "down," hit valve body on end plug. When tapping valve "up," tap on head of the screw attaching valve body to main valve body. Do not hit control valve body.**

(19) Turn steering wheel from stop to stop several times to expel air from system. Refill reservoir as required.

CAUTION: Do not turn hard against ends of travel. This will generate high pressure and may blow out the "O" rings since the valve body screws have not been finally tightened.

(20) With steering wheel in straight ahead center position, start and stop the engine several times, tapping the valve body up or down as required until there is no movement of the steering wheel when the engine is started or stopped.

(21) The valve is now centered. Tighten the two screws attaching valve body to housing to 200 inch-pounds.

Gear Shaft Oil Seal Replace

The gear shaft oil seal may be replaced without removing the steering gear from the vehicle.

(1) Remove steering arm nut.

(2) Disconnect steering gear arm from sector shaft with Tool C-3646 (Fig. 4).

(3) Slide threaded adapter SP-3609 of Tool C-3880 over end of gear shaft and thread tool nut SP-3610 on gear shaft. Maintain pressure on threaded adapter with tool nut while screwing adapter far enough to engage metal portion of grease retainer. Place the two half rings SP-1932, and Tool retainer ring over both

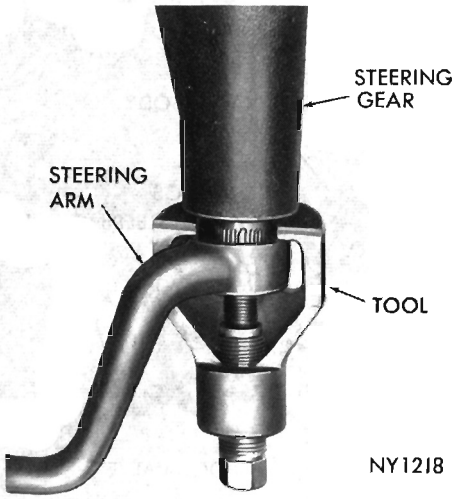

Fig. 4—Removing Steering Gear Arm

portions of the Tool (Fig. 5). Turn the tool nut counter-clockwise to withdraw grease retainer from housing.

(4) Remove oil seal snap ring with pliers Tool C-3229 and remove seal back-up washer.

(5) Use Tool C-3880 in same manner as outlined in step (3) to remove inner seal.

(6) Place tool adapter SP-3828 with long step of adapter against new seal and slide it over shaft with seal lip toward housing (Fig. 6). Install tool nut on gear shaft and tighten tool nut until shoulder of tool adapter contacts gear housing.

(7) Remove tool nut and adapter and install seal back-up washer and oil seal snap ring with sharp edge out.

(8) Position grease retainer in housing bore. Place tool adapter SP-3828 with short step of lip against seal (Fig. 7). Install tool nut on gear shaft and tighten tool nut until shoulder of tool adapter contacts gear housing.

(9) Place steering gear and front wheels in straight ahead position and install steering gear arm and nut.

(10) Tighten steering gear arm nut to 175 foot-pounds.

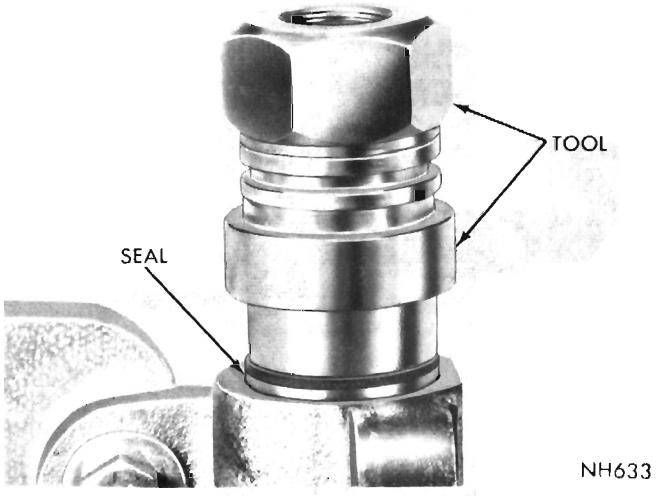

Fig. 6—Installing Gear Shaft Inner Oil Seal

SERVICE OUT OF VEHICLE

WORM SHAFT AND PISTON REPLACEMENT

The master serration on the power steering gear worm shaft spline, used for centering the steering shaft coupling, is machined after the steering gear is completely assembled.

If it should become necessary to replace a power steering gear worm shaft and piston assembly, it will be necessary to file a master serration on the spline of the worm shaft, since the replacement part does not have a master serration machined in the spline.

To file a master serration on a worm shaft spline, the power steering gear must be completely assembled and the worm shaft centered in its travel, then with the steering gear in its normal upright position

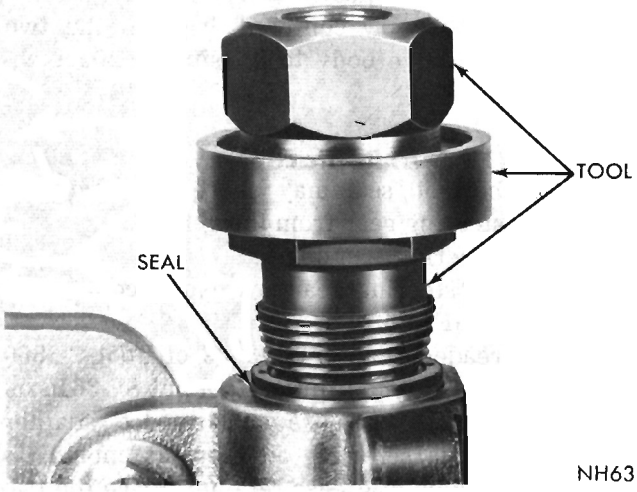

Fig. 5—Removing Gear Shaft Oil Seal

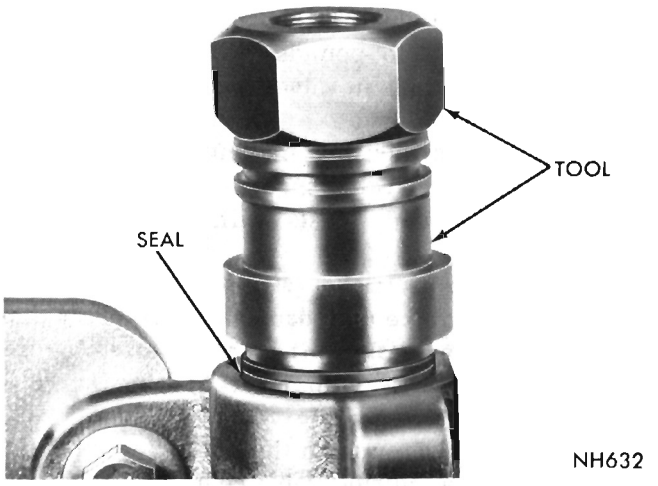

Fig. 7—Installing Gear Shaft Grease Retainer

remove one tooth of the spline, at the 12 o'clock position, with a suitable file.

Gear Removal

(1) Disconnect battery ground cable.

(2) Remove steering column coupling to wormshaft roll pin.

(3) Raise carpet and remove three bolts in lower steering column support plate at floor pan.

(4) Remove three bolts attaching steering column bracket to instrument panel support. Save shim pack from between bracket forward leg and support for re-use during installation.

(5) Carefully pry lower coupling from steering gear wormshaft.

(6) Disconnect pressure and return hoses at steering gear valve. Fasten ends of hoses above oil level in pump.

(7) Remove gear shaft nut and washer and remove steering arm from gear shaft with Tool C-3646 (Fig. 4).

CAUTION: Do not remove steering arm by prying with a lever or striking with a hammer as serious steering gear internal damage may result.

(8) Remove three steering gear to frame mounting bolts. Remove steering gear as follows:

6 Cylinder Models

Remove steering gear from top of engine compartment.

Valiant Models - 273 Cu. In. Engine

Remove left front engine mount stud nut and washer. Using suitable jack, raise engine slightly to provide clearance between left exhaust manifold and body sheet metal. Remove starter and remove steering gear from under vehicle.

Satellite, Fury and VIP. Models - 273, 318, 383 and 440 Cu. In. Engines

Remove steering gear from under vehicle.

Satellite Models - 426 Cu. In. Engine

Remove battery and battery tray. From topside of engine compartment, remove left engine mount insulator stud nut, insulator through-bolt and insulator bracket upper bolt. Using a suitable jack, raise left side of engine approximately 1-1/2 inches. Separate insulator from engine mount and allow insulator to rest on frame. Rotate steering gear, wormshaft end, up between cylinder head and shock absorber tower and out through battery tray opening.

Gear Reconditioning

Clean the gear assembly thoroughly in a suitable solvent and install unit in holding fixture Tool C-3323.

(1) Drain steering gear through the pressure and return connections by turning steering wormshaft from one extreme of travel to the other.

(2) Remove valve body attaching screws, and remove valve body and three "O" rings (Fig. 8).

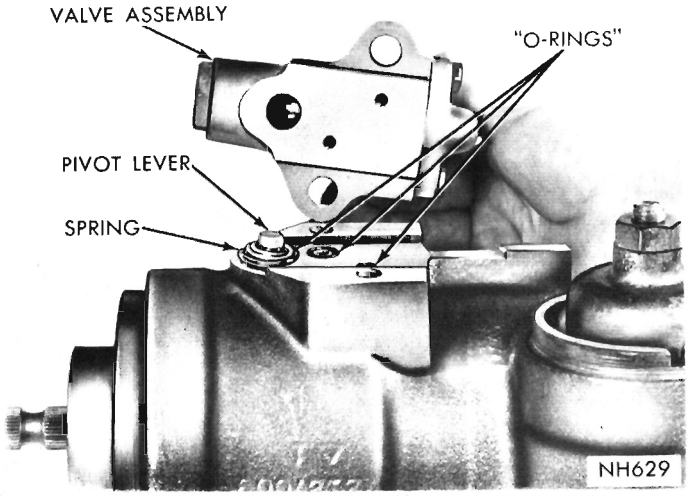

Fig. 8—Removing Valve Body Assembly

(3) Remove pivot lever and spring. Pry under spherical head with a screw driver (Fig. 9).

CAUTION: Use care not to collapse slotted end of the valve lever as this will destroy the bearing tolerances of the spherical head.

(4) Remove gear shaft grease retainer and oil seal as outlined in "Gear Shaft Oil Seal Replacement."

(5) Loosen gear shaft adjusting screw locknut and remove gear shaft cover spanner nut with Tool C-3633 (Fig. 10).

(6) Rotate wormshaft to position gear shaft sector teeth at center of piston travel. Loosen steering power train retaining nut with Tool C-3634 (Fig. 11).

(7) Position holding Tool C-3323 so sector shaft is in a horizontal position. Place Tool C-3875 on threaded end of gear shaft and slide tool into housing until both tool and shaft are engaged with bearings.

(8) Turn wormshaft to full left turn position to compress power train parts. Remove power train retaining nut with Tool C-3634 (Fig. 11). Remove housing head tang washer.

(9) While holding power train firmly compressed,

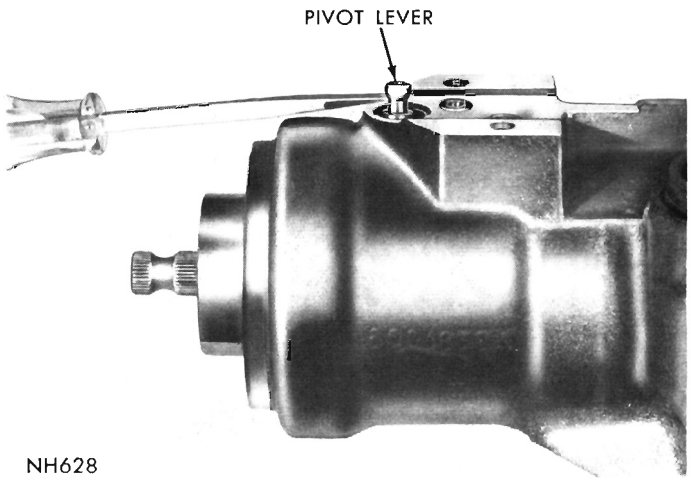

Fig. 9—Removing Pivot Lever

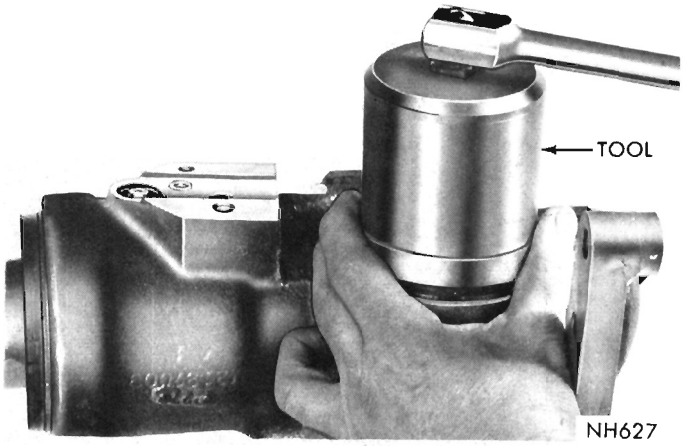

Fig. 10—Removing Gear Shaft Retaining Nut

pry on piston teeth with a screw driver using gear shaft as a fulcrum and remove complete power train (Fig. 12). **It is important that cylinder head, center race and spacer assembly and housing head be maintained in close contact with each other. This will eliminate the possibility of reaction rings becoming disengaged from their grooves in both cylinder head and housing head. It will prohibit center spacer from becoming separated from center race and becoming "cocked" in housing which may make it impossible to remove power train without damaging the spacer, the housing, or both.**

(10) Place power train vertically in a vise equipped with soft jaws to avoid damaging piston assembly. See Fig. 13 for parts identification. **The 33 worm bearing needle rollers will fall out when housing head is removed from wormshaft. Use arbor Tool C-3929 (Fig. 14) to hold rollers in position when housing head is removed.**

(11) Raise housing head until wormshaft oil seal just clears top of wormshaft and position arbor tool C-3929 on top of wormshaft and into oil seal. With arbor in position pull up on housing head until arbor is positioned in bearing. Remove housing head and

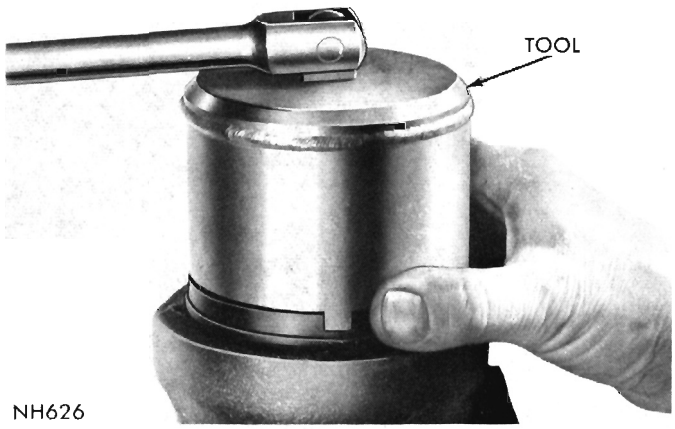

Fig. 11—Removing Power Train Retaining Nut

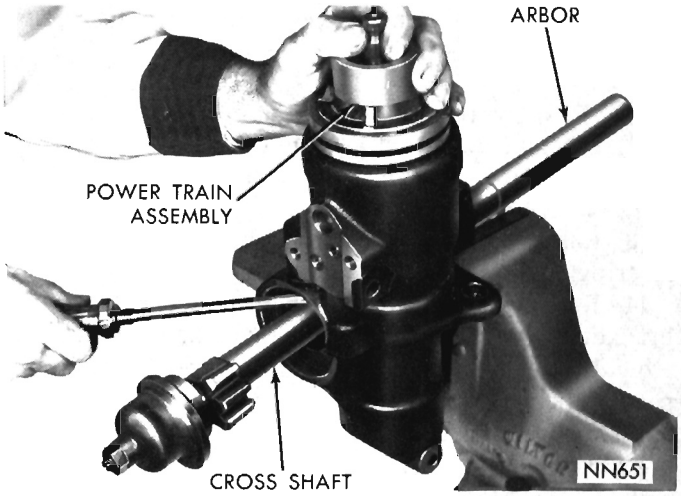

Fig. 12—Removing Power Train

arbor. **To reinstall rollers, if they should become dislodged, retain rollers in the cage with wheel bearing lubricant.**

CAUTION: If the wormshaft oil seal is to be replaced, perform the operation with the housing head assembled in the steering gear housing.

(12) Remove large "O" ring from groove in housing head.

(13) Remove reaction seal from groove in face of housing head with air pressure directed into ferrule chamber (Fig. 15).

(14) Inspect all grooves for burrs. Make sure passage from ferrule chamber to upper reaction chamber is unobstructed.

(15) Remove reaction spring, reaction ring, worm balancing ring and spacer.

(16) Hold wormshaft from turning, then turn nut with sufficient force to release staked portions from knurled section and remove nut. **Wire brush the knurled sections to remove the chips, then blow out the nut and wormshaft to remove any metal particles.**

(17) Remove upper thrust bearing race (thin) and upper thrust bearing.

(18) Remove center bearing race.

(19) Remove lower thrust bearing and lower thrust bearing race (thick).

(20) Remove lower reaction ring and reaction spring.

(21) Remove cylinder head assembly.

(22) Remove two "O" rings in two outer grooves in cylinder head.

(23) Remove reaction "O" ring from groove in face of cylinder head with air pressure directed into oil hole located between two "O" ring grooves (Fig. 16).

(24) Remove snap ring, sleeve and rectangular oil seal ring from cylinder head counterbore (Fig. 17).

(25) Test operation of wormshaft. The torque required to rotate wormshaft throughout its travel in or out of piston must not exceed 2 inch-pounds with a 15

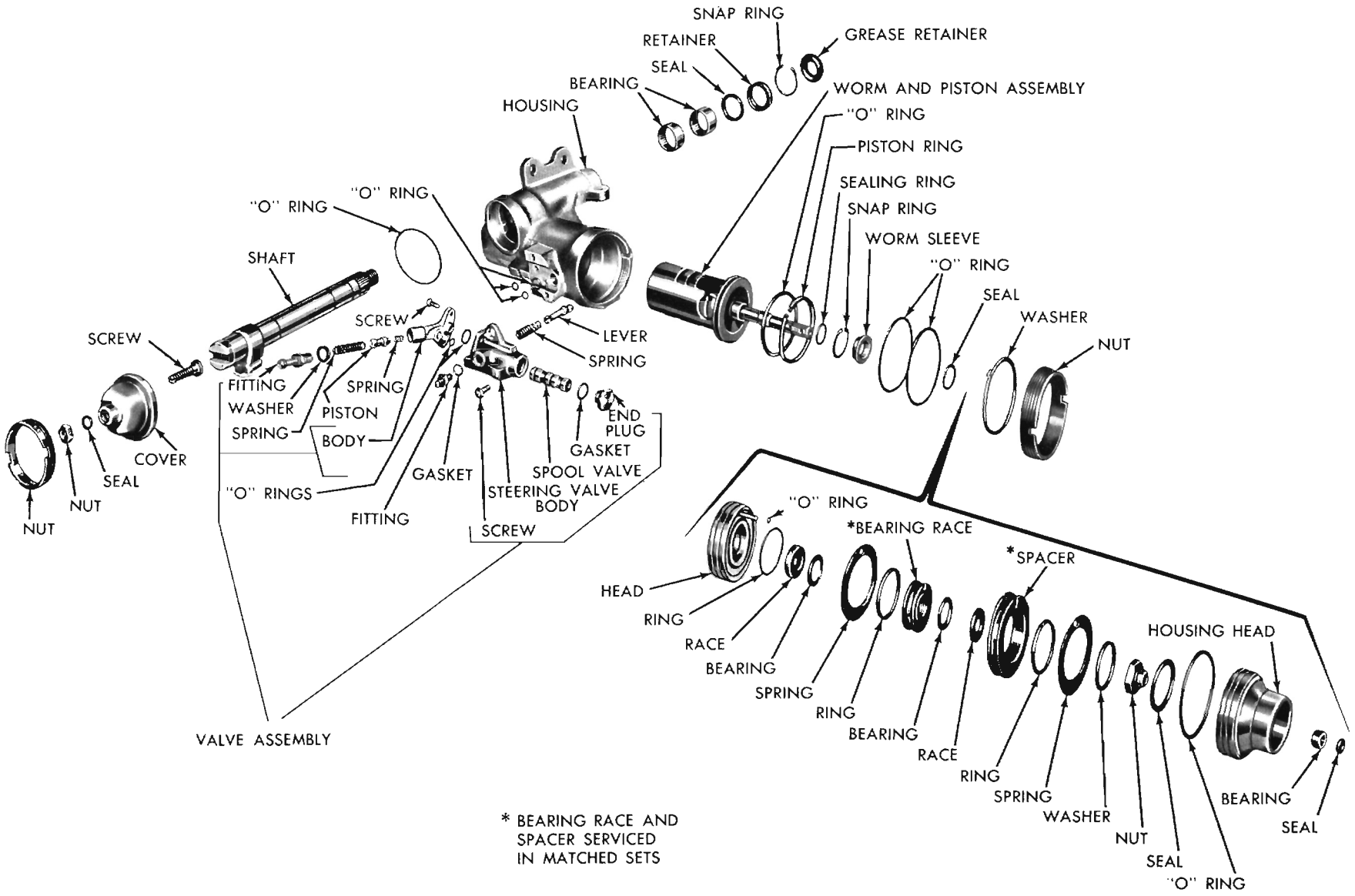

Fig. 13—Steering Gear Disassembled View

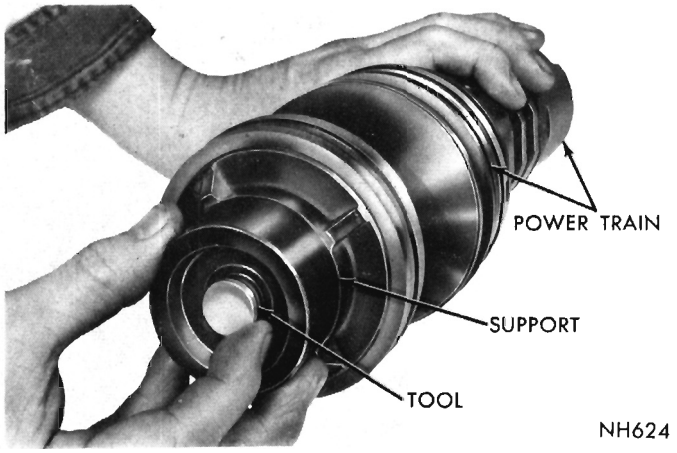

Fig. 14—Retaining Bearing Rollers with Arbor Tool

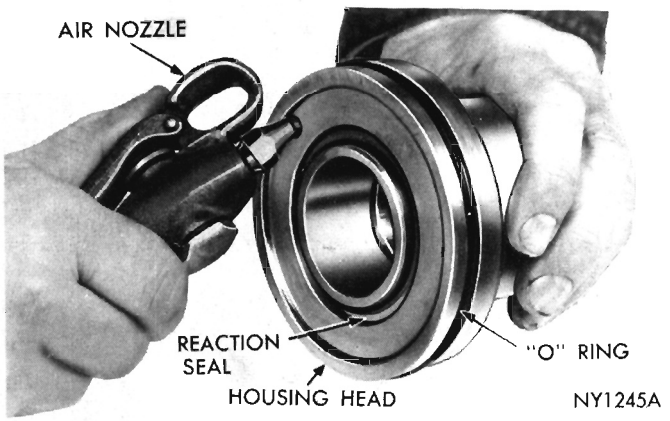

Fig. 15—Removing Reaction Seal from Worm Shaft Support

pound side load. The worm should run in and out of piston under its own weight. **The worm and piston is serviced as a complete assembly and should not be disassembled.**

(26) Test for excessive side play with the piston held firmly in a vise with the rack teeth up, and the worm in its approximate center of travel. The vertical side play measured at a point 2-5/16 inches from the piston flange should not exceed .008 inch when the end of the worm is lifted with a force of 1 pound (Fig. 18).

(27) Inspect condition of rubber sealing ring located under cast iron ring and replace if necessary. Install cast iron piston ring as follows:

(a) Slide a new piston ring into place in piston groove, then place piston and ring assembly in Tool C-3676 with lower part of piston and ring resting on land of tool (Fig. 19).

(b) Press down on piston to seat ring in piston groove, forcing open ends of ring out for ease of locking the ring.

(28) Place piston assembly in a vertical position (wormshaft up) in a vise equipped with soft jaws.

(29) Inspect cylinder head ferrule oil passage for obstructions and the lands for burrs, then lubricate the two large "O" rings and install them in the cylinder head grooves (Fig. 13).

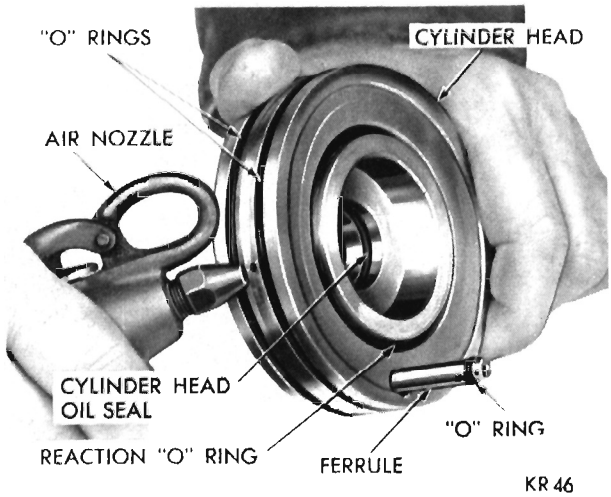

Fig. 16—Removing Reaction Seal from Cylinder Head

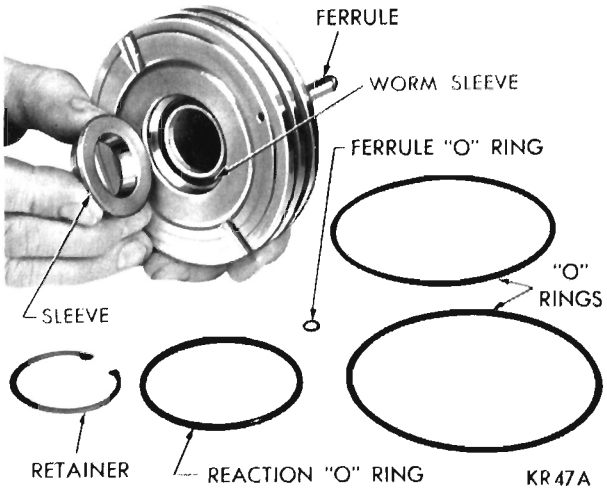

Fig. 17—Removing Cylinder Head Oil Seal

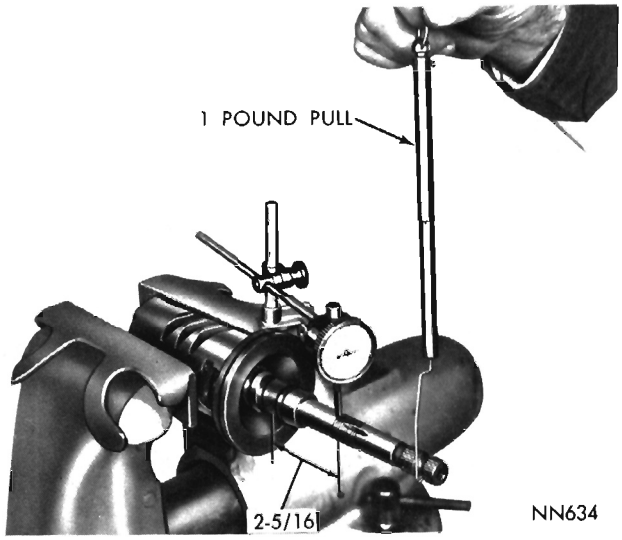

Fig. 18—Checking Worm Shaft Side Play

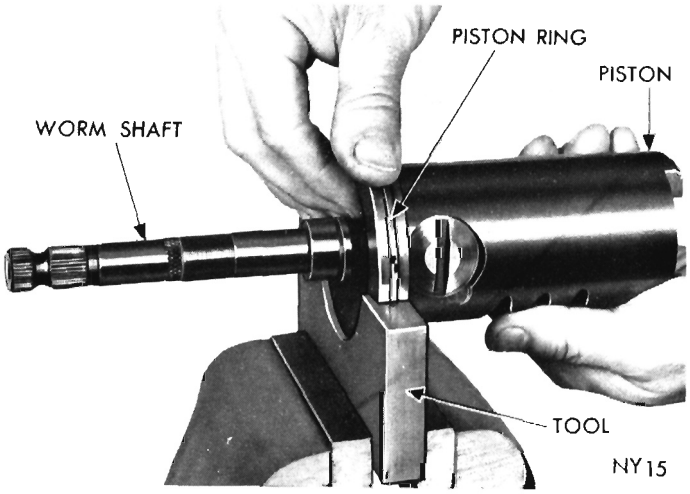

Fig. 19—Installing Piston Ring

(30) Install worm sleeve seal, sleeve and snap ring (if removed). Make sure snap ring is seated in groove.

(31) Install lower reaction seal (O-ring) in cylinder head groove.

(32) Slide cylinder head assembly (ferrule up) on wormshaft. Check wormshaft seal ring making sure gap is closed to avoid damaging the ring as the cylinder head moves against piston flange.

(33) Lubricate with power steering fluid, and install parts in the following order:

(a) Lower thrust bearing race (thick).

(b) Lower thrust bearing.

(c) Lower reaction spring (with the small hole over the ferrule).

(d) Lower reaction ring (flange up so ring protrudes through reaction spring and contacts the reaction "O" ring in the cylinder head).

(e) Center bearing race.

(f) Upper thrust bearing.

(g) Upper thrust bearing race (thin).

(h) Start wormshaft thrust bearing adjusting nut (do not tighten).

(34) Turn wormshaft clockwise one-half turn. Hold wormshaft in this position with splined nut, Tool C-3637 and socket wrench, and hold in this position thru items 35 and 36, then tighten nut to 50 foot-pounds to prestretch wormshaft threads.

(35) Loosen adjusting nut. Place several rounds of cord around center bearing race (Fig. 20). Make a loop in one end of cord and hook loop of a distributor breaker arm spring scale Tool MTU-36 in cord loop. Pulling cord will cause bearing race to rotate. Retighten worm bearing adjusting nut while pulling on cord with scale. When adjusting nut is tightened properly, reading on the scale should be 16 to 24 ounces (20 ounces preferred while the race is turning).

(36) Stake upper part of wormshaft adjusting nut into knurled area of shaft.

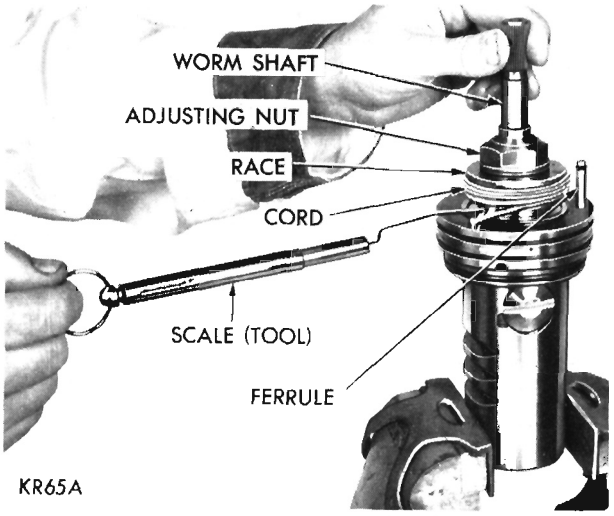

Fig. 20—Checking Center Bearing Preload

(a) Hold a 1/4 inch flat end punch on center line of wormshaft end at a slight angle to nut flange (Fig. 21).

(b) Strike punch a sharp blow with a hammer and test preload. **If adjusting nut moved during staking operation, it can be corrected by striking the nut a glancing blow in the direction required to regain proper preload.**

(c) After retesting for proper preload, stake the nut at three more locations 90° apart around upper part of the nut.

(d) To test total staking, apply 20 foot-pounds of torque in each direction. If nut does not move, staking operation is satisfactory. **Retest wormshaft preload to determine that adjustment remains constant after nut is securely locked.**

(37) Position spacer assembly over center race, engaging dowel pin of spacer in slot of race, and slot of spacer entered over cylinder head ferrule. **This will**

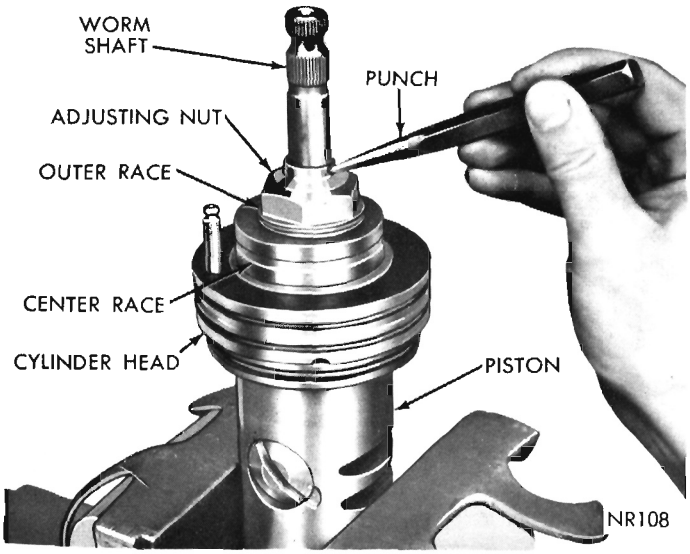

Fig. 21—Staking Worm Shaft Bearing Adjusting Nut

align the valve pivot lever hole in the center bearing race with the valve pivot lever hole in center bearing spacer assembly. The small "O" ring for the ferrule groove should not be installed until after upper reaction spring and spacer have been installed.

(38) Install upper reaction ring on center race and spacer with flange down against spacer.

(39) Install upper reaction spring over reaction ring with cylinder head ferrule through hole in reaction spring.

(40) Install worm balancing ring (without flange) inside upper reaction ring.

(41) Lubricate ferrule "O" ring with Petrolatum and install in groove on cylinder head ferrule.

(42) If oil seal was removed from housing head, install a new seal with Tool C-3650 (Fig. 7). See "Wormshaft Oil Seal Replacement." With lip of seal toward bearing, drive seal until tool bottoms on the support.

(43) Lubricate and install reaction seal in groove in face of housing head with flat side of seal out (Fig. 22). Install "O" ring in groove on housing head.

(44) Slide housing head and arbor, Tool C-3929 over the wormshaft carefully engaging cylinder head ferrule and "O" ring and making sure reaction rings enter circular groove in housing head. The power train is now ready for installation in housing.

(45) It is generally not necessary to remove sector shaft cover. However, this may be easily accomplished by removing the adjusting screw. While holding the cover, turn adjusting screw clockwise until the shaft becomes disengaged from cover. The adjusting screw and thrust washer will now slide out of the "T" slot in end of shaft.

Gear Shaft Assembly

(46) To remove gear shaft needle bearings from housing, remove grease retainer, oil seal snap ring with pliers Tool C-3915 and remove seal back-up washer.

(47) Insert Tool C-3875 in steering housing; place housing in a press and press out bearings and oil seal.

(48) To install gear shaft lower needle bearing, place bearing on end of Tool C-3875. Press bearing into steering gear housing 1/32 inch below end of bearing bore to provide space for oil seal, back-up washer and snap ring and cross shaft grease retainer. See "Cross Shaft Oil Seal Replacement."

CAUTION: The arbor adapter ring must be used with C-3875 Remover and Installer Arbor, otherwise the bearings may be crushed.

(49) To install upper needle bearing, place bearing on end of Tool C-3875. Press bearing into housing flush with end surface of bore.

(50) Insert gear shaft and adjusting screw into cover and using a screwdriver through the threaded hole in cover, turn screw counterclockwise to pull shaft completely into the cover. Lubricate a new square section seal ring and slide it over adjusting screw into position on top of cover. Install adjusting screw lock nut, but do not tighten at this time.

(51) Lubricate cross shaft cover "O" ring with wheel bearing grease and install on shelf of gear housing.

(52) Lubricate power train bore of the housing with power steering fluid, and carefully install power train assembly. To keep reaction rings from coming out of their grooves keep worm turned fully counterclockwise. The piston teeth must be facing to the right and the valve lever hole in center race and spacer must be in the "up" position.

CAUTION: Make sure the cylinder head is bottomed on the housing shoulder (Figs. 1 and 2).

(53) Align valve lever hole in center bearing race and spacer exactly with the valve lever hole in the gear housing. Turn the housing head by tapping on a reinforcing rib with hammer and drift. Use Tool C-3649 to maintain alignment (Fig. 23). **The aligning tool should not be removed until the spanner nut is securely tightened.**

(54) Install housing head tang washer to index with groove in housing. Install spanner nut and tighten to 110 to 200 foot-pounds with Tool C-3634.

(55) Set the power piston at the center of travel and install gear shaft and cover assembly so that sector teeth index with piston rack teeth. Make sure "O" ring is positioned in face of cover.

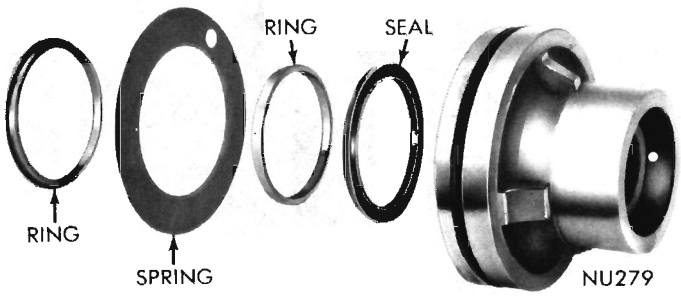

Fig. 22—Reaction Seal Ring in Worm Shaft Support

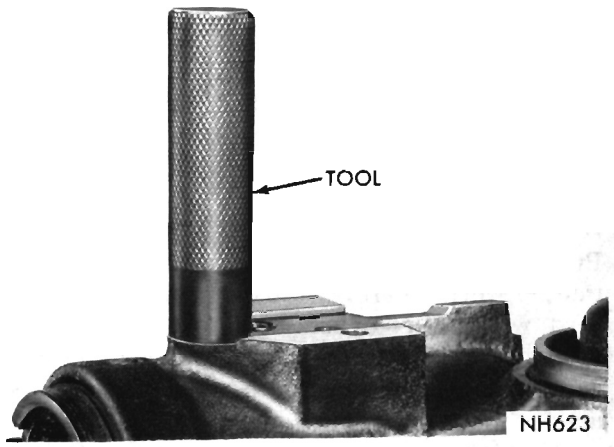

Fig. 23—Aligning Center Bearing Spacer with Steering Valve

(56) Install cover spanner nut and tighten 110 to 200 foot-pounds with Tool C-3633.

(57) Install valve pivot lever (double bearing end first) (Fig. 24) into center race and spacer through hole in steering housing so that slots in valve lever are parallel to wormshaft in order to engage the anti-rotation pin in center race. Install valve pivot lever spring small end first. **Turn worm until the piston bottoms in both directions and observe the action of the lever. It must be in the center of the hole and snap back to its center position when the worm torque is relieved.**

(58) Install valve body on housing making sure valve pivot lever enters hole in valve spool (Fig. 1). Be sure "O" ring seals are in place. Tighten valve mounting screws to 7 foot-pounds.

(59) Install new gear shaft seal followed by seal back-up washer and snap ring and a new grease retainer as outlined under "Gear Shaft Oil Seal Replacement."

Final Tests and Adjustments

(1) Remove oil reservoir cover and fill reservoir with Power Steering Fluid, Part No. 2084329 or equivalent, to the level mark.

(2) Connect test hoses with proper adapters to hydraulic pump on vehicle with pressure gauge C-3309B installed between pump and steering gear.

(3) Start the engine.

(4) Center valve until unit is not self-steering. Tap on the head of valve body attaching screws to move valve body up on steering housing, and tap on end plug to move valve body down on housing. Expel all air from the unit by turning wormshaft back and forth through the travel several times.

(5) Refill reservoir before proceeding with following tests and adjustments on the bench.

(a) With steering gear on center, tighten gear shaft adjusting screw until backlash in steering gear arm just disappears. See "Gear Shaft Adjustment."

If power train has been removed, tighten 1-1/4 turns from this position and while holding adjusting screw in this position, tighten lock nut (Fig. 25). **This is a temporary adjustment to bring piston rack and sector teeth in full alignment.**

(b) Operate unit through full travel several times to align piston rack and sector teeth.

(c) With gear on center, readjust sector shaft backlash. This will require loosening adjusting screw until backlash is evident. Then retighten adjusting screw until backlash just disappears. Continue to tighten for 3/8 to 1/2 turn from this position and tighten lock nut to 50 foot-pounds to maintain setting.

(d) Starting from a point at least one full turn of the wormshaft either side of center, torque at sector shaft required to turn unit through center at 2 rpm in each direction shall not exceed 20 foot-pounds or vary more than 5 foot-pounds from left to right.

(e) Adjust torque to be equal in both directions by readjusting the valve.

Tighten valve body adjusting screw to 200 inch-pounds.

(f) With gear at or near full turn in either direction, attempt to return unit to center by applying torque wrench at steering gear shaft. Hold wormshaft until cross shaft torque builds up to 50 foot-pounds. Release wormshaft and maintain a constant steady pull at 2 rpm on the gear shaft. If cross shaft torque does not drop to 20 foot-pounds maximum as the unit passes through center, check for too much interior drag; binding valve lever, binding spool valve, or tight cross shaft adjustment.

(6) With unit under power, but with no load, torque required to rotate wormshaft through an included angle of 180° (90° either side of center) at 6 rpm (or one revolution every ten seconds) shall be 6-10 inch-pounds. Disconnect test equipment and mounting fixture and install unit in vehicle.

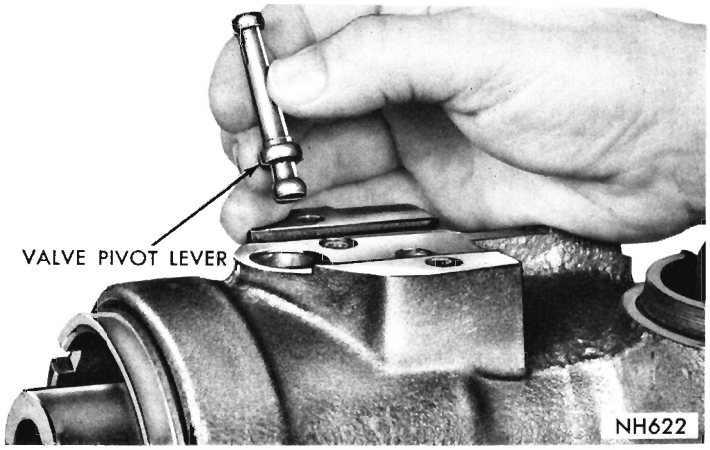

Fig. 24—Installing Valve Pivot Lever

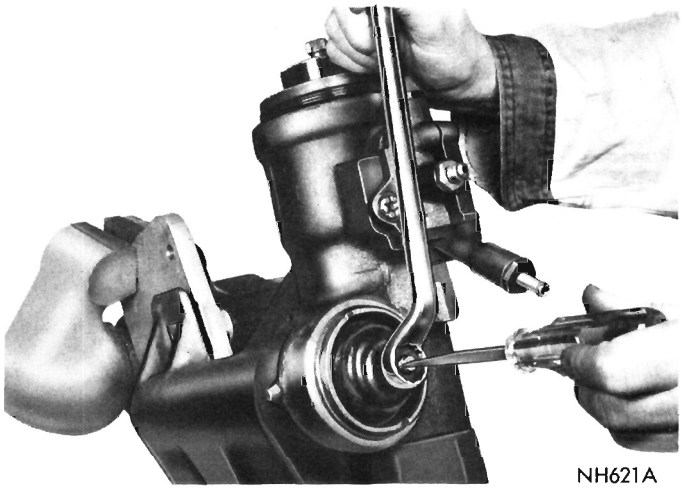

Fig. 25—Adjusting Steering Gear Mesh

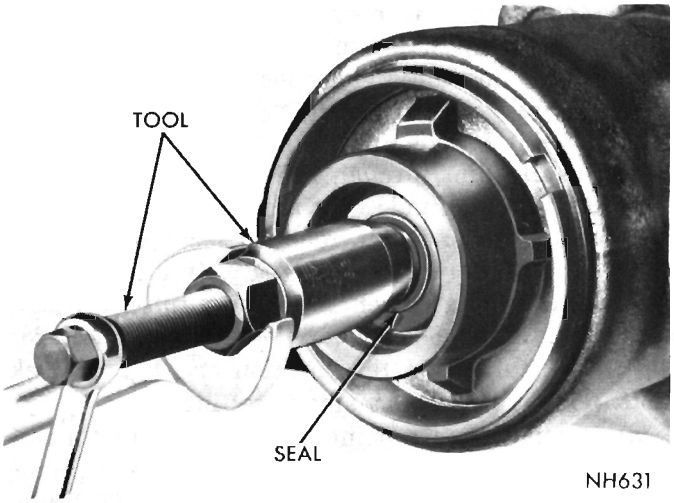

Fig. 26—Removing Worm Shaft Oil Seal

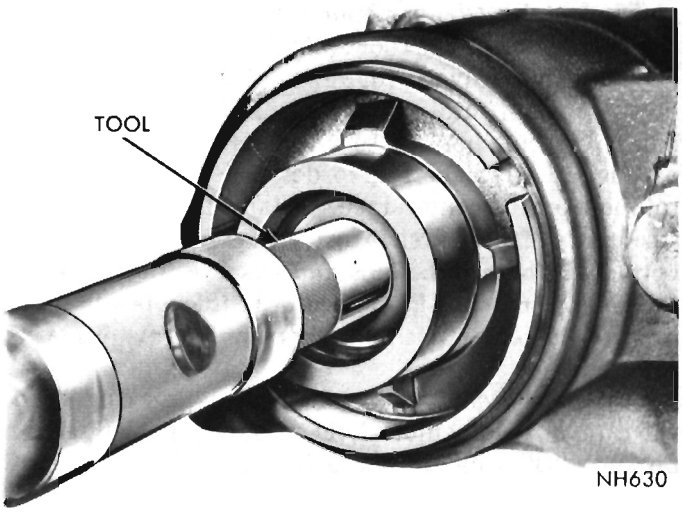

Fig. 27—Installing Worm Shaft Oil Seal

Gear Installation

(1) Position steering gear in vehicle as follows:

6 Cylinder Models

Install steering gear on mounting bracket from top side of engine compartment.

Valiant Models - 273 Cu. In. Engine

Install steering gear on mounting bracket from under vehicle. Install starter, lower engine into position and install left front engine mount stud washer and nut.

Satellite, Fury and V.I.P. Models - 273, 318, 383 and 440 Cu. In. Engines

Install steering gear on mounting bracket from under vehicle.

Satellite Models - 426 Cu. In. Engine

Position steering gear on mounting bracket by rotating gear (gear shaft first) back through battery tray area and down between cylinder head and shock absorber tower. Install insulator stud and nut to engine mount. Lower engine back down on frame and install insulator bracket through-bolt and upper frame bolt.

(2) Install steering gear mounting bolts and tighten to 100 foot-pounds on all models.

(3) Connect pressure and return hoses to steering valve. (See Hose Installation).

(4) Center the steering gear wormshaft. Wormshaft master spline should be in 12 o'clock position. With front wheels in straight ahead position, install steering gear arm, washer and nut. Tighten nut to 175 foot-pounds.

(5) With steering wheel centered, lower steering column till column shaft coupling indexes with wormshaft master spline. Master spline is indicated on lower coupling flange by a 1/4 inch hole next to roll pin hole.

(6) Install coupling roll pin.

(7) Install and adjust steering column as outlined in "Column" section of this manual.

Hose Installation

When either hose is reinstalled or replaced, it is essential that the sponge sleeve hose protector be installed as follows:

(1) Avoid sharp bends in a large section of hose (about 10 inch diameter is recommended).

(2) Hose must remain at least 1 inch away from all pulleys, battery case and brake lines and 2 inches away from exhaust manifold.

(3) Sponge sleeves must be installed where hose contacts composition or metal.

(4) Tighten pump end hose fitting to 24 foot-pounds and gear end fitting to 160 inch-pounds.

Worm Shaft Oil Seal Replacement

The worm shaft oil seal replacement requires removal of the steering gear assembly from the vehicle. See "Gear Removal."

(1) Remove oil seal with Tool C-3638 (Fig. 26).

(2) Drive new oil seal in place (lip of seal toward housing head) with Tool C-3650 (Fig. 27).

POWER STEERING PUMPS

INDEX

	Page
General Information	21
Flow Control Valve	28
.94 Model	28
1.06 Model	33
Service Diagnosis	22
Service Procedures	23

	Page
Pump Removal	23
Pump Installation	23
Oil Seal Replacement	28
.94 Model	28
1.06 Model	28
Reconditioning	29
.94 Model	24
1.06 Model	29
Inspection	25
.94 Model	25
1.06 Model	25
Specifications	54
Tightening References	55

GENERAL INFORMATION

Two different power steering pumps are used on Plymouth models.

The .94 pump can be identified by the long oval shape of the filler neck and a drive pulley secured to the drive shaft with a large nut (Fig. 1). Rectangular pumping vanes carried by a shaft driven rotor, move the fluid from the intake to the pressure cavities of the cam ring. As the rotor begins to rotate, centrifugal force throws the vanes against the inside surface of the cam ring to pick up residual oil which is forced into the high pressure area. As more oil is picked up by the vanes, oil is forced into the cavities of the thrust plate, through two cross-over holes in the cam ring and pressure plate which empty into the high pressure area between the pressure plate and the housing end plate.

Filling the high pressure area causes oil to flow under the vanes in the slots of the rotor forcing the vanes to follow the inside oval surface of the cam ring. As the vanes rotate to the small area of the cam ring, oil is forced out from between the vanes.

The 1.06 pump can be identified by a 3/8 inch threaded hole in the pulley end of the drive shaft (Fig. 2). The operation of the 1.06 pump is similar to the vain type pump but differs in appearance and design. The rotor is star shaped and upon rotation, propells 12 stainless steel rollers against the inside surface of the cam ring. As the rollers follow the eccentric pattern of the cam ring, oil is drawn into the inlet ports and exhausted through the discharge ports as the rollers are forced into vee shaped cavities of the rotor.

FLOW CONTROL VALVE

A flow control valve permits a regulated amount of oil to return to the intake side of the pump when excess output is generated during high speed operation. This reduces the power requirements to drive the pump and minimizes temperature build-up.

The 1.06 pump incorporates a two-stage flow control valve. High pressure oil passes through two orifices in a metering insert. (The metering insert is located in an oil passage sealed with a 1/8 inch pipe plug.) At low speed, approximately 2.7 gpm is passed to the gear. As speed increases and the valve moves, excess oil is by-passed to inlet and the valve acts to block flow through one orifice. This drops flow to the gear to approximately 1.6 gpm at high speeds. Two-stage flow control provides high flow at low speed for improved steering, while reducing the flow at high speed to reduce the power steering system oil temperature.

When steering conditions exceed maximum pressure requirements, such as turning the wheels against the stops, the pressure built up in the steering gear also exerts pressure on the spring end of the flow control valve. This end of the valve houses the pressure relief valve on both the .94 and 1.06 models. High

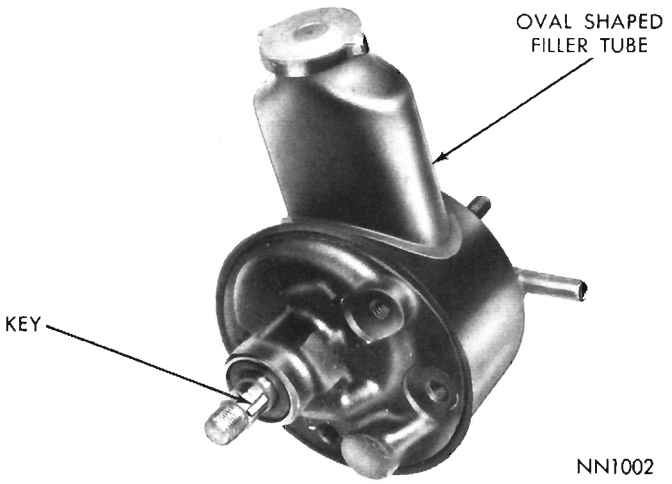

Fig. 1—.94 Pump

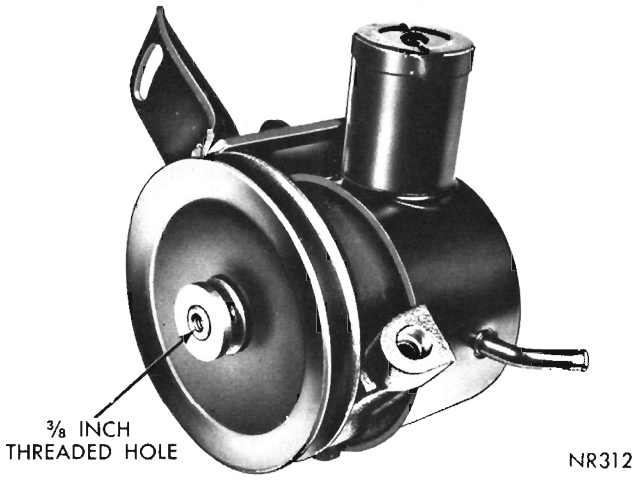

Fig. 2—1.06 Pump

pressure lifts the relief valve ball from its seat and allows oil to flow through a trigger orifice located in the outlet fitting of the .94 pump and in the front land of the flow control valve of the 1.06 pump. This reduces pressure on the spring end of the valve which then opens and allows the oil to return to the intake side of the pump. This action limits maximum pressure output of the pump to a safe level.

Under normal operating conditions, the pressure requirements of the pump are below maximum, causing the pressure relief ball and the flow control valve to remain closed.

SERVICE DIAGNOSIS

Condition	Possible Cause	Correction
INTERMITTANT OR NO ASSIST	(a) Loose belt.	(a) Tighten belt.
	(b) Low fluid level.	(b) Inspect and correct fluid level.
	(c) Low pump efficiency.	(c) Service as necessary.
	*(d) Pump seizure.	(d) Replace pump.
	(e) Flow control bore plug ring not in place.	(e) Replace snap ring. Inspect groove for depth.
	(f) Flow control valve sticking.	(f) Service flow control valve as necessary.
	(g) Wrong pressure-relief valve setting.	(g) Replace flow control valve—.94 pump. Replace flow control valve and pump housing body—1.06 pump.
	(h) Damaged "O" ring on flow control bore plug.	(h) Replace "O" ring.
	(i) Loose plug in end of flow control valve.	(i) Tighten plug. See "Tightening Reference".
	(j) Distorted pressure plate.	(j) Replace pressure plate—.94 pump.
	(k) Cam ring badly worn.	(k) Replace cam ring—.94 pump.
	(l) Vanes improperly installed.	(l) Install vanes properly—.94 pump.
	(m) Plugged metering orifice(s) or trigger orifice.	(m) Disassemble pump and clean.
	(n) Damaged or leaky pressure relief valve seat (plug) or ball.	(n) Replace seat and ball—1.06 pump; replace flow control valve—.94 pump.
	(o) Damaged housing bore "O" ring(s) or pressure plate "O" ring.	(o) Replace "O" rings.
	(p) Scored pressure plate, thrust plate, cam, rotor or rollers.	(p) Replace rotating group package—1.06 pump.
NOISY PUMP	(a) Low fluid level.	(a) Inspect and correct fluid level.
	(b) Belt noise.	(b) Inspect for pulley alignment, paint or grease on pulley and correct.
	(c) Belt loose (causing pump rattling noise).	(c) Adjust belt. See "Cooling System" Group 7—1.06 pump.
	(d) Foreign material blocking pump housing oil inlet hole.	(d) Remove reservoir, visually check inlet oil hole and service as necessary.
	(e) Vanes improperly installed.	(e) Install properly or replace if necessary—.94 pump.
	(f) Vanes sticking in rotor.	(f) Recondition pump and correct cause —.94 pump.
	(g) Faulty flow control valve.	(g) Replace flow control valve—.94 pump.
	(h) Pressure plate, thrust plate or rotor scored.	(h) Replace badly scored part or lap in if lightly scored—.94 pump.
	(i) Pressure, plate, thrust plate, cam, rotor or rollers scored.	(i) Replace rotating group package—1.06 pump.
	(j) Pump hose interference with sheet metal or brake lines.	(j) Reroute hoses.
PUMP VIBRATION	(a) Pump hose interference with sheet metal or brake lines.	(a) Reroute hoses.
	(b) Faulty or loose belt.	(b) Replace or adjust belt as necessary. See "Cooling System," Group 7.
	(c) Pulley loose or out of round.	(c) Replace pulley.
	(d) Crankshaft pulley loose or damaged.	(d) Replace crankshaft pulley.
PUMP LEAKS	(a) Cap or filler neck leaks.	(a) Correct fluid level. (Fluid Level Too High).
	(b) Reservoir solder joints leak.	(b) Resolder and replace reservoir as necessary.

Condition	Possible Cause	Correction
	(c) Reservoir "O" ring leaking.	(c) Inspect sealing area of reservoir. Replace "O" ring or reservoir as necessary.
	(d) Shaft seal leaking.	(d) Replace seal.
	(e) Loose rear bracket bolts.	(e) Tighten bolts. See "Tightening Reference".
	(f) Loose or faulty pressure hose ferrule.	(f) Tighten fitting to 24 foot-pounds, 1.06 pump — 20 foot-pounds, .94 pump, or replace as necessary.
	(g) Damaged pressure hose "O" ring.	(g) Replace "O" ring—1.06 pump.
	(h) Housing ball plug leaking.	(h) Replace housing and flow control valve—1.06 pump.
	(i) Rear bolt holes stripped or casting cracked.	(i) Repair, if possible, or replace pump.

*Clean and flush high pressure and return hoses. Recondition gear valve body (see "Power Steering Gear").

SERVICE PROCEDURES

Checking Fluid Level

1.06 Model

(1) Start engine, turn steering wheel from stop to stop several times to expel air from system, then shut off engine.

(2) Wipe reservoir filler cap free of dirt, remove cap and visually inspect oil level in reservoir.

Engine Cold—Oil level should be at bottom of filler neck.

Engine Hot—Oil level should be one-half way up in filler neck.

.94 Model

The oil level in the .94 pump should be checked **only** after pump has reached normal operating temperature. A dip stick, built into the reservoir cap, indicates "FULL" or "ADD". Fluid level should be at the "FULL" mark when hot.

Replenish the fluid, if necessary, in all pumps with Power Steering Fluid, Part No. 2084329 or equivalent.

Pressure Test—All Models

(1) Inspect fluid level in reservoir. Fill to correct level indicated on dip stick if necessary.

(2) Measure belt tension and correct if necessary. See "Cooling System," Group 7.

(3) Disconnect the high pressure hose at the steering gear and connect the free end of the hose to the gauge side of C-3309B. Connect a second pressure hose from the valve side of C-3309B to the steering gear. The valve must be installed on the outlet side of the gauge (Fig. 3).

(4) Insert thermometer in fluid reservoir, start engine and warm up fluid to a temperature between 150 and 170 degrees Fahrenheit.

Turning the wheels from stop to stop will aid in warming the fluid. Do not hold wheels against stop for extended period as undue internal pump overheating will result.

(5) With engine idling at 600 RPM, and gauge valve open, note pressure while turning steering wheel from one extreme position to the other. Turn the wheels all the way to one or the other stop momentarily and note the maximum pressure. A pressure of at least the minimum pressure shown for the particular pump in "Specifications" should be read.

(6) If pressure is under the specified rating, the steering system is not functioning properly. To determine which unit is faulty, momentarily close the pressure gauge valve and note maximum pressure registered on gauge. If the pressure reads less than the maximum pressure shown for the particular pump in "Specifications" the pump is faulty and should be reconditioned. Should pressure reading in step 5 read low but not in step 6, the steering gear is faulty.

When removing test equipment, be sure to reinstall hoses in original position to avoid interference with engine or sheet metal.

Pump Removal—All Models

(1) Loosen pump mounting and locking bolts and remove belt.

(2) Disconnect both hoses at pump.

(3) Remove mounting and locking bolts and remove pump and bracket.

PUMP INSTALLATION—All Models

(1) Position pump on engine and install mounting and locking bolts.

(2) Install drive belt and adjust. See "Cooling System—Group 7". Tighten mounting bolts to 30 foot-pounds.

(3) Connect pressure and return hoses. (Use new

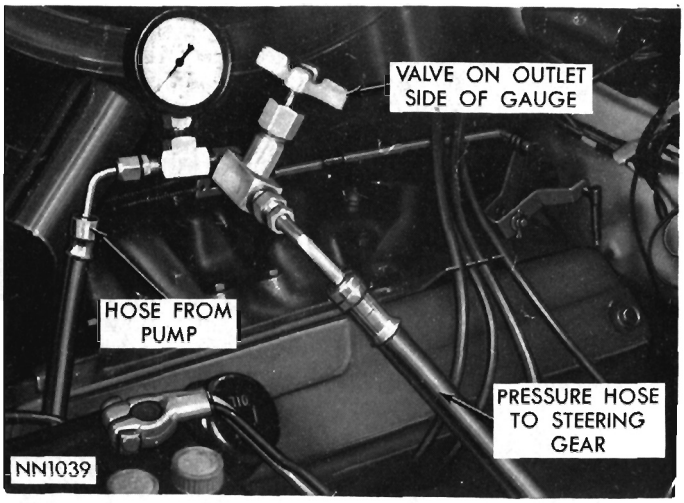

Fig. 3—Pressure Test

pressure hose "O" ring—1.06 pump only). See "Hose Installation".

(4) Fill pump reservoir to top of filler neck with Power Steering Fluid, Part No. 2084329 or equivalent.

(5) Start engine and turn steering wheel several times from stop to stop to bleed the system. Stop engine, check oil level and correct if necessary. See "Checking Fluid Level".

HOSE INSTALLATION—All Models

When either hose is reinstalled or replaced, the following points are essential:

(1) Route hoses in same position they were in before removal.

(2) Route hoses smoothly, avoiding sharp bends and kinking.

(3) When properly installed, the pressure hose tube ends should rest against the outside of the pump reservoir neck on one end, and the outside of the gear valve body on the other end. (Fig. 4 and 5).

NOTE: The pressure hose tube end is not designed to rest against the gear valve body on the Barracuda 383 Cu. inch engine, and on the Belvedere 426 Cu. inch (Hemi). The gear fitting for the pressure hose on these models is a right angle fitting.

(4) Tighten pump end hose fitting to 24 foot-pounds and gear end fitting to 160 inch-pounds.

(5) Hoses must remain at least one inch away from all pulleys, battery case and brake lines, and two inches away from exhaust manifold.

(6) When used, protective sponge sleeves must be properly positioned to prevent hose contact with other components in engine compartment.

(7) After hoses are installed, check for leaks while system is being bled. See "Pump Installation".

OIL SEAL REPLACEMENT

.94 Model

To service the drive shaft oil seal, it is necessary to remove the pump from the vehicle, disassemble and reassemble the pump as outlined in "Reconditioning —.94 Model."

Reconditioning—.94 Model

Disassembly

(1) Remove pulley retaining nut before loosening power steering pump belts. Remove pump from engine as an assembly.

(2) Tap pulley off shaft with plastic hammer.

(3) Remove brackets from pump, drain reservoir and clean exterior of pump with solvent.

(4) Remove key from drive shaft.

(5) Using soft protective jaws, clamp pump (shaft down) in vise between square boss and shaft housing (Fig. 6).

(6) Remove two mounting studs and pressure hose

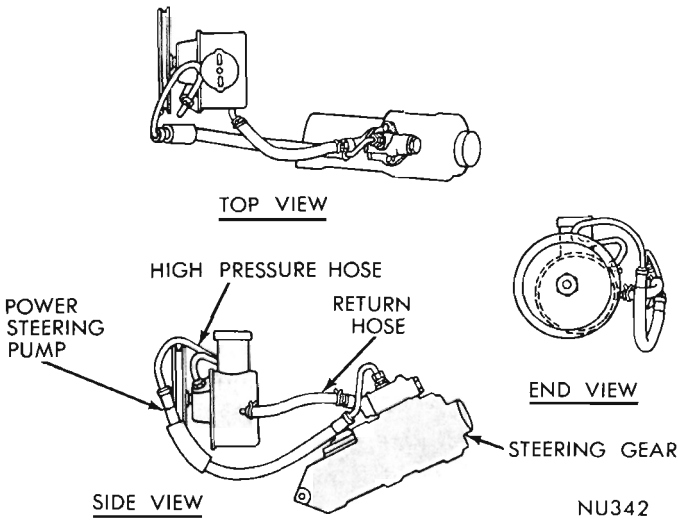

Fig. 4—Hose Routing—1.06 Pump 8 Cylinder Engines

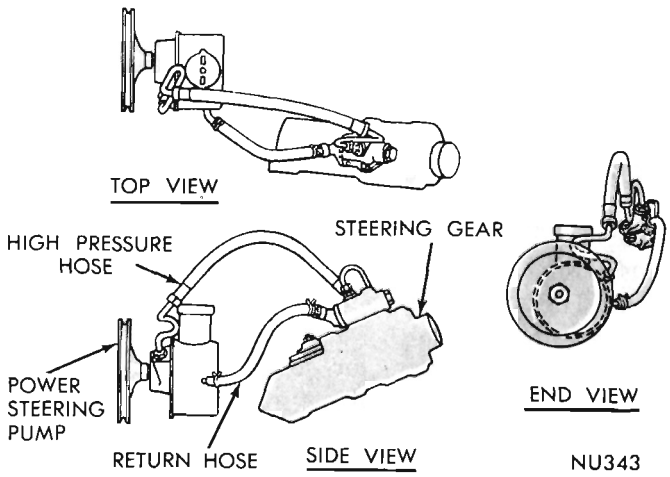

Fig. 5—Hose Routing—1.06 Pump 6 Cylinder Engines

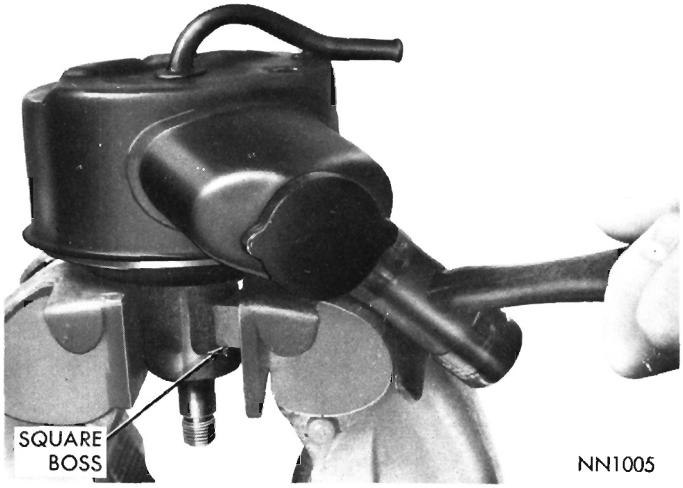

Fig. 6—Removing Reservoir

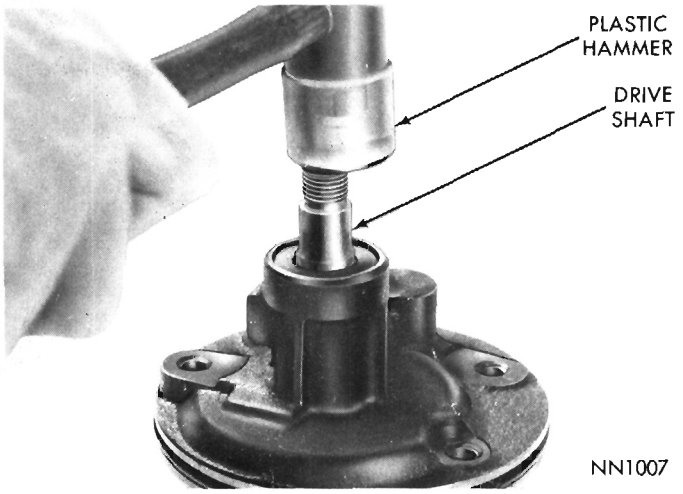

Fig. 8—Removing Drive Shaft Assembly

fitting. Gently tap reservoir filler tube back and forth with plastic hammer to loosen. Work reservoir off pump body (Fig. 6). Discard "O" rings from reservoir, two mounting studs and pressure fitting.

(7) Using a punch, tap end cover retainer ring around till one end of ring lines up with hole in pump body. Insert punch in hole far enough to disengage ring from groove in pump bore and pry ring out of pump body (Fig. 7).

(8) Tap end cover with plastic hammer to jar it loose. Spring under cover should push cover up.

(9) Remove pump body from vise, place in inverted position on flat surface and tap end of drive shaft with plastic hammer to loosen pressure plate, rotor and thrust plate assembly from body. Lift pump body off of rotor assembly. Flow control valve and spring should slide out of bore also (Fig. 8).

(10) Remove and discard end plate and pressure plate "O" rings.

(11) Place pump body on flat surface and pry drive shaft oil seal out with a screw driver (Fig. 9).

(12) Inspect seal bore in housing for burrs, nicks or score marks that would allow oil to bypass outer seal surface.

(13) If necessary to disassemble flow control valve for cleaning, see "Flow Control Valve Disassembly".

(14) After lifting pressure plate and cam ring from rotor, remove ten vanes from slots in rotor.

(15) Clamp drive shaft in soft jawed vise, with rotor and thrust plate facing up.

(16) Remove rotor lock ring:

(a) On those pumps using a C-Shaped ring, tap ring off shaft using a 7/16 inch open end wrench (Fig. 11). Discard ring.

(b) On pumps using a full diameter ring, pry ring off drive shaft using a screw driver (Fig. 10). Exercise care to avoid nicking the rotor end face. Discard ring.

(17) Slide rotor and thrust plate off of shaft and remove shaft from vise.

Inspection

(1) Wash all parts in clean solvent, blow out all

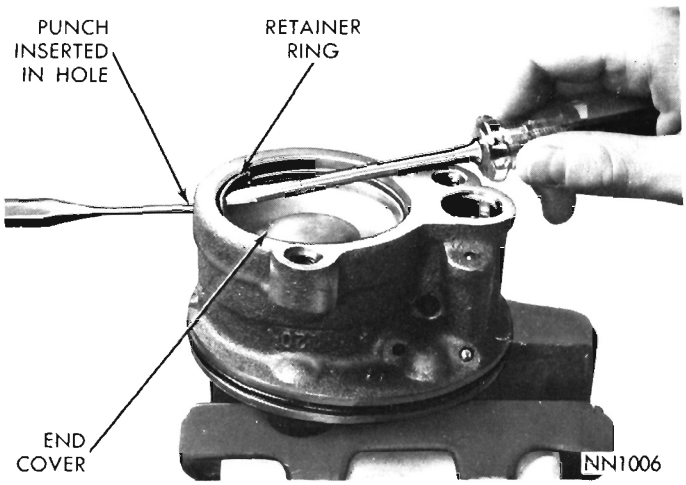

Fig. 7—Removing End Cover Retainer Ring

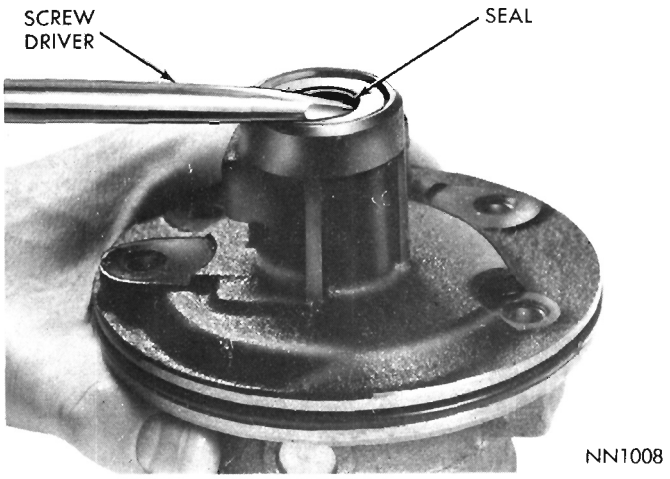

Fig. 9—Oil Seal Removal

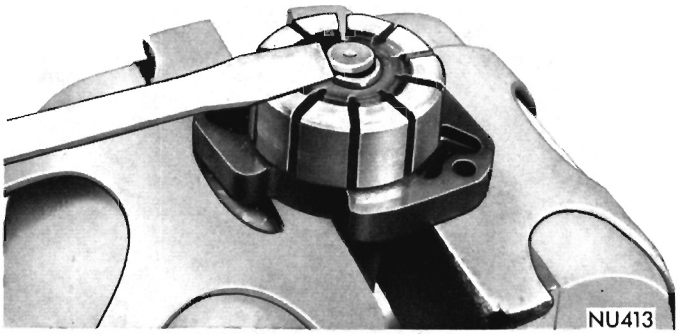

Fig. 10—Removing Full Diameter Lock Ring

passages with compressed air and air dry cleaned parts.

(2) Inspect drive shaft for excessive wear and seal area for nicks or scoring. Replace if necessary.

(3) Inspect fit of vanes in rotor. Vanes must slide freely in slots of rotor without binding. Excessively loose vanes require replacement of rotor and/or vanes. Binding can be relieved by cleaning or removal of burrs with a thin fine file.

(4) Inspect flat surfaces of pressure and thrust plates for wear or scoring. Light scoring can be removed by lapping on a flat surface. Remove all lapping compound thoroughly before reassembly.

(5) Inspect inner surface of cam ring for heavy scuff or chatter marks. Replace if necessary. Light score or scuff marks can be removed by polishing with a small, flat oil stone.

(6) Inspect end cover for nicks or burrs on surface contacting "O" ring and remove with a fine stone.

(7) Inspect pump body drive shaft bushing for excessive wear. Replace pump body and bushing as an assembly if badly worn or scored.

Assembly

(1) Place pump body on flat surface and drive new drive shaft seal into bore with a 7/8 or 15/16 inch socket till seal bottoms on shoulder (Fig. 12).

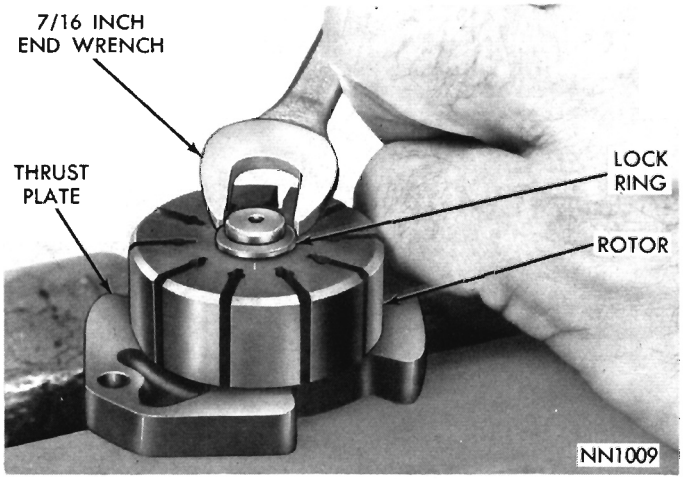

Fig. 11—Removing "C" Shaped Lock Ring

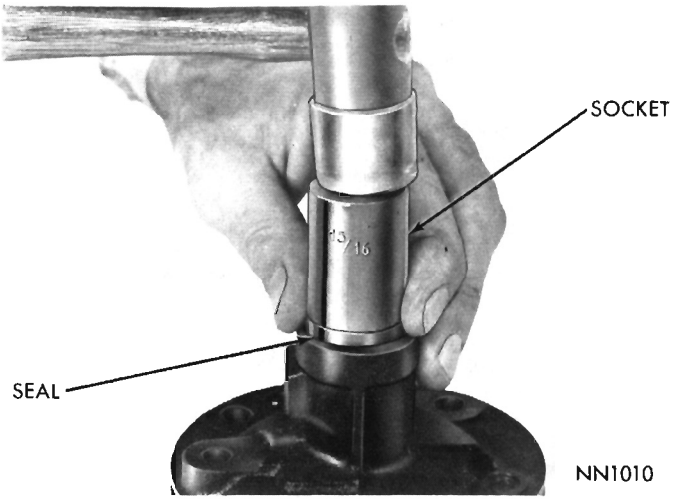

Fig. 12—Oil Seal Installation

CAUTION: Excessive force will distort the seal.

(2) Lubricate seal with power steering fluid and clamp pump body in vise, (shaft end down).

(3) Install end cover and pressure plate "O" rings in grooves in pump cavity. These rings are the same size. Lubricate with power steering fluid.

(4) Lubricate large pump body to reservoir "O" ring and install on pump body.

(5) With drive shaft clamped splined end up in soft jawed vise, install thrust plate on drive shaft (smooth, ported side up) (Fig. 13).

(6) Slide rotor over splines with the counterbore of rotor facing **down.** Install rotor lock ring making sure ring is seated in groove (Fig. 14).

CAUTION: Regardless of which locking ring was originally used, always replace with a new, full diameter ring.

(7) Install two dowel pins in holes in pump cavity. Carefully insert drive shaft, rotor and thrust plate assembly in pump cavity indexing locating holes with dowel pins (Fig. 15).

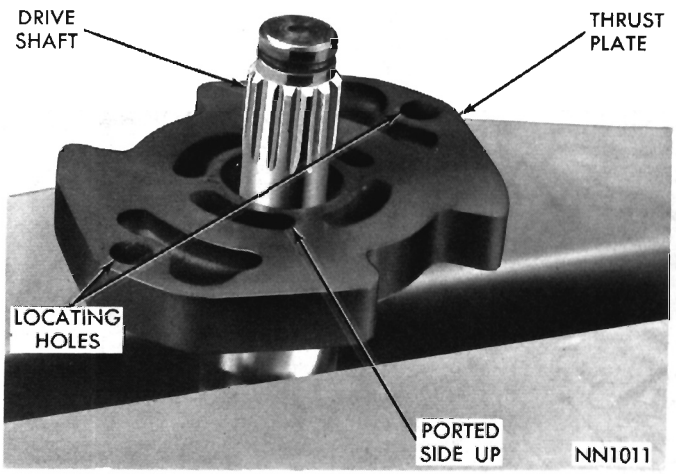

Fig. 13—Installing Thrust Plate

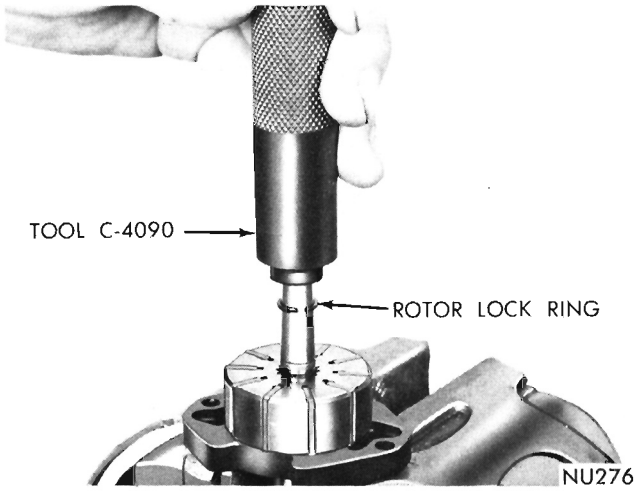

Fig. 14—Installing Rotor Lock Ring

(8) Slide cam ring over rotor on dowel pins with arrow on ring facing "UP" (Fig. 16).

(9) Install ten vanes in rotor slots with radius edge facing out towards cam ring inner surface (Fig. 17).

CAUTION: Vanes installed with flat edge out will result in noisy pump operation.

(10) Position pressure plate on dowel pins. Place a 1-1/4 inch socket in groove of pressure plate and seat entire assembly on "O" ring in pump cavity by pressing down on pressure plate with both thumbs (Fig. 18).

(11) Place spring in groove in pressure plate and position end cover lip edge UP over spring.

(12) Press end cover down below retaining ring groove with thumb and install ring making sure it is seated in groove (Fig. 19).

This operation can be performed in an arbor press if available. Care should be exerted to prevent cocking the end cover in the bore or distorting the assembly.

(13) Using a punch, tap retainer ring ends around in the groove until opening is opposite flow control

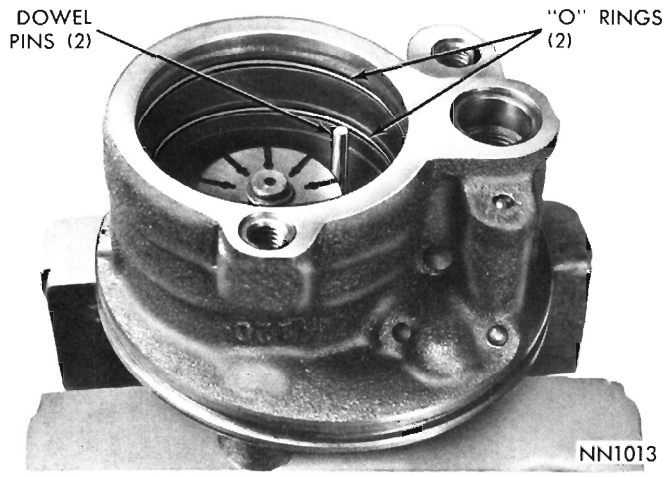

Fig. 15—Rotor and Thrust Plate Installed

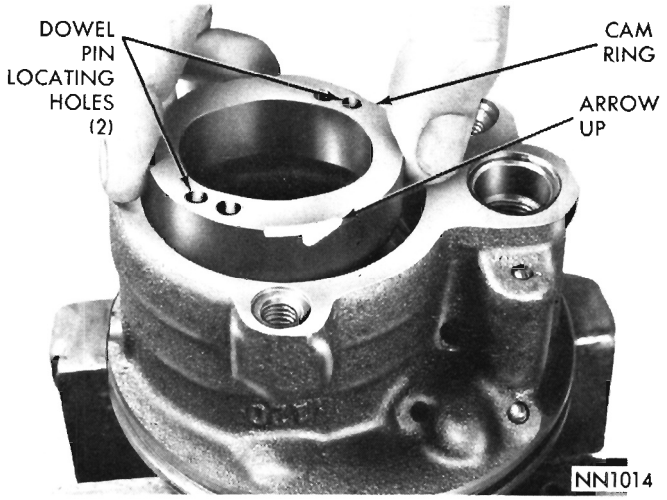

Fig. 16—Installing Cam Ring

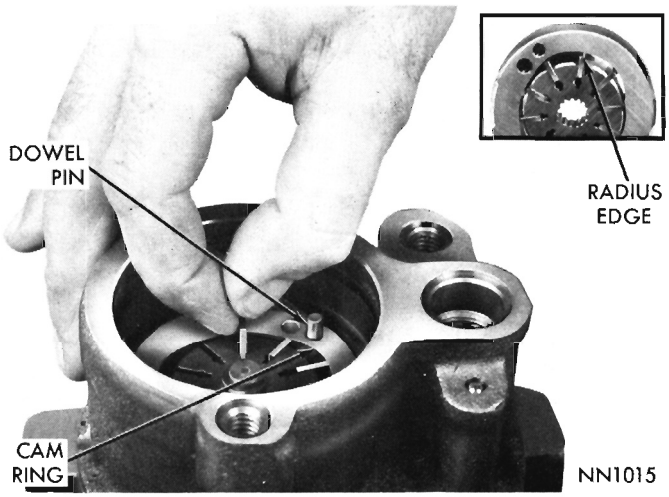

Fig. 17—Installing Rotor Vanes

valve bore. This is important for maximum retention of the retainer ring (Fig. 19).

(14) Replace reservoir "O" ring seal, two mounting stud "O" ring seals and flow control valve "O" ring seal on pump body, lubricate with power steering

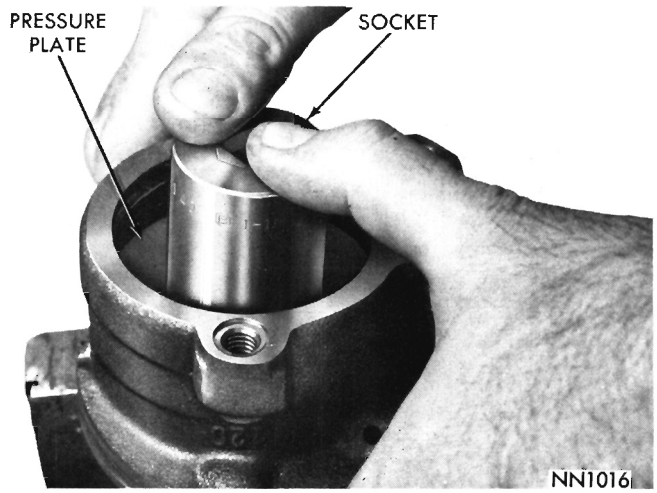

Fig. 18—Seating Pressure Plate

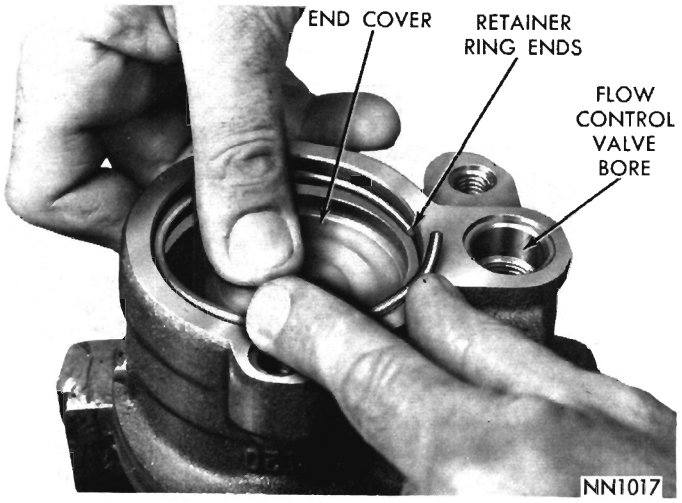

Fig. 19—Installing End Cover Plate and Retainer Ring

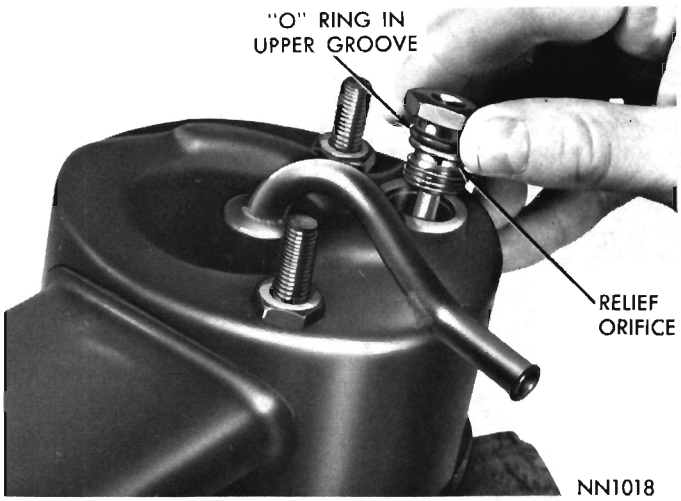

Fig. 20—Installing Pressure Hose Fitting

fluid and carefully position reservoir on pump body. Visually align the mounting stud holes till studs can be started in threads.

(15) Using a plastic hammer, tap reservoir down on pump and insert flow control valve spring and valve (slotted end up).

(16) Replace "O" ring on pressure hose fitting and lubricate with power steering fluid (Fig. 20).

CAUTION: Be sure "O" ring is installed on upper groove. It is possible to install "O" ring in lower groove. This would restrict relief outlet orifice.

(17) Install pressure hose fitting and tighten mounting studs. Tighten pressure hose fitting to 20 foot-pounds and rear mounting studs 25-35 foot-pounds.

(18) Remove pump assembly from vise and install mounting brackets and drive shaft key.

(19) Install pulley on shaft and secure with retaining nut. Tighten nut to 45-55 foot pounds.

(20) Install pump assembly on engine and refill reservoir. Start engine and inspect for leaks.

FLOW CONTROL VALVE

.94 Model

The flow control valve is serviced as an assembly. Nicks or burrs that might cause the valve to stick in the bore may be removed by rubbing valve over flat surface covered by crocus cloth. Care should be taken to prevent rounding the sharp edges of the lands.

The valve may be disassembled for cleaning if dirt has caused pump failure. It is important that if the valve is disassembled for cleaning purposes, the entire pump should be disassembled and cleaned.

Disassembly

(1) Remove pressure hose fitting from pump reservoir. Discard "O" ring on fitting.

(2) Withdraw valve with a magnet. If valve is stuck in bore, it may be necessary to push in on valve against spring pressure. Release pressure exerted against valve abruptly and allow valve to spring out of bore.

(3) Clamp land end of valve in a soft jawed vise and remove hex head plug and shim(s). Note number of shims on plug. Same number of shims should be installed on assembly of valve.

(4) Remove valve from vise and remove pressure relief ball, guide and spring.

Assembly

(1) Insert spring, guide and pressure relief ball in end of flow control valve (Fig. 21).

(2) Install hex head plug using the same number of shims as were removed. **Altering shim thickness will change relief pressure.**

(3) Install hex head plug and tighten to 50 inch-pounds.

(4) Insert flow valve spring and valve in bore. Install new "O" ring on pressure hose fitting and lubricate with power steering fluid.

(5) Thread fitting into pump body and tighten to 20 foot-pounds.

Oil Seal Replacement—1.06 Model

(1) Remove pump from engine. Drain reservoir and clean exterior before servicing.

(2) Clamp pump in vise securely at mounting bracket.

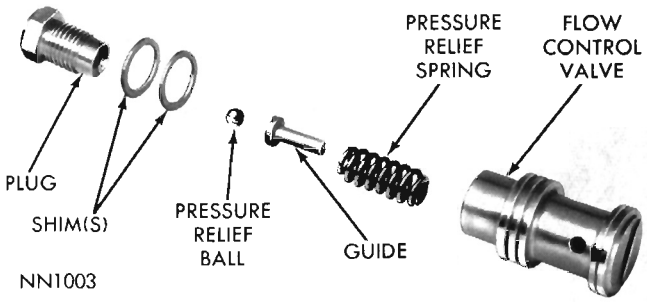

Fig. 21—Flow Control Valve (.94 Pump)

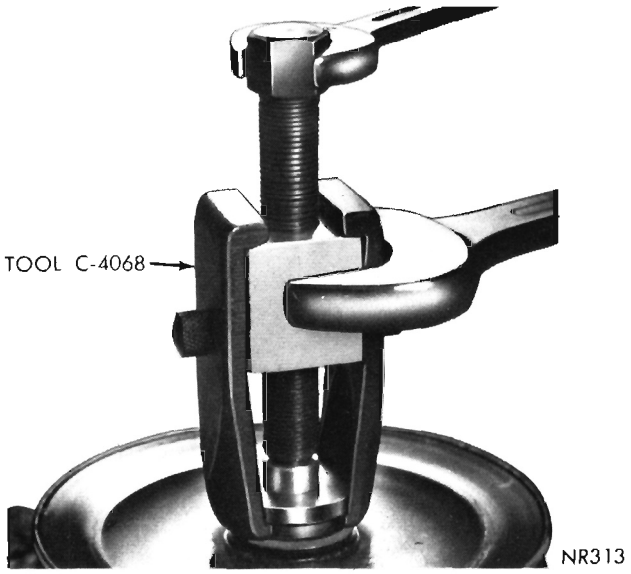

Fig. 22—Removing Drive Pulley (1.06 Pump)

(3) Remove pulley with Tool C-4068 (Fig. 22).

(4) Position seal remover adapter SP-5323A over end of drive shaft with large opening toward pump.

(5) Place seal remover Tool C-4062 over shaft, through adapter and screw tapered thread well into metal portion of seal. Tighten large drive nut and remove seal. (Fig. 23).

(6) Inspect seal bore in housing for burrs, nicks, or score marks that would allow oil to by-pass outer seal surface.

(7) Inspect shaft for scratches or burrs, if any, remove with crocus cloth. Lubricate new seal and install with lip toward pump. Use Tool C-4061 to drive seal flush with housing (Fig. 24).

(8) Install drive pulley. See "Pulley Installation", (Figs. 34 and 35).

(9) With installer shaft clamped securely in vice, tighten drive nut against thrust bearing and press pulley onto shaft.

CAUTION: Do not attempt to press pulley on to shaft without the use of special tool as serious damage will result to interior of pump.

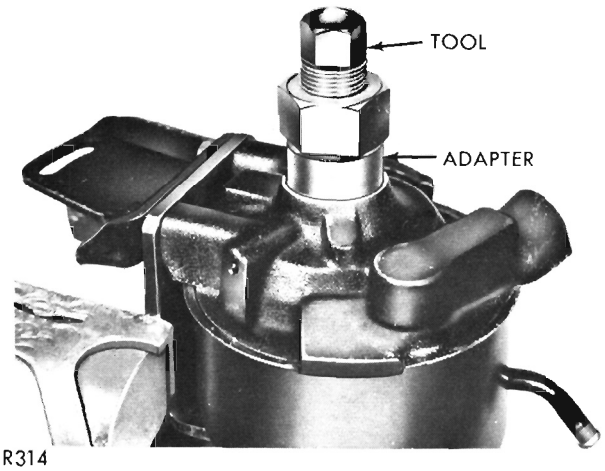

Fig. 23—Removing Shaft Seal

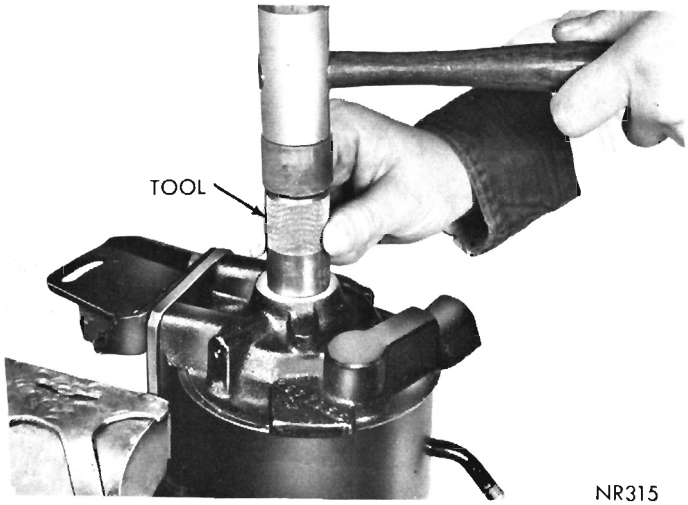

Fig. 24—Installing Shaft Seal

A small amount of drive shaft end play will be observed when pulley is installed flush with end of shaft. This movement is necessary and will be minimized by a thin cushion of oil between the rotor and end plates when pump is in operation.

(10) Install pump and adjust belt as outlined under "Cooling" Group 7.

RECONDITIONING—1.06 Model

Disassembly (Fig. 25)

(1) Remove pump from engine. Drain reservoir and clean exterior before servicing.

(2) Clamp pump securely in vise at mounting bracket.

(3) Remove pulley with Tool C-4068 (Fig. 22).

(4) Remove oil seal as described in "Oil Seal Replacement" section.

(5) Remove pump from vise and remove three mounting bracket bolts, remove bracket.

(6) Remove reservoir and place pump in vise with shaft down (use vise with soft protective jaws). Discard mounting bolt and reservoir "O" rings.

(7) Using a punch, tap end cover retaining ring around until one end of ring lines up with hole in pump body. Insert punch in hole far enough to disengage ring from groove in pump bore. Remove ring from body (Fig. 26).

(8) Tap end cover with plastic hammer to jar it loose. Spring under cover should push cover up.

(9) Remove pump body from vise, place in inverted position on clean flat surface and tap end of drive shaft to loosen rotating group. Lift pump body off rotating group. Insure brass seal plate is removed from bottom of housing bore.

(10) Discard pressure plate and end cover "O" rings.

(11) Remove snap ring, bore plug, flow control

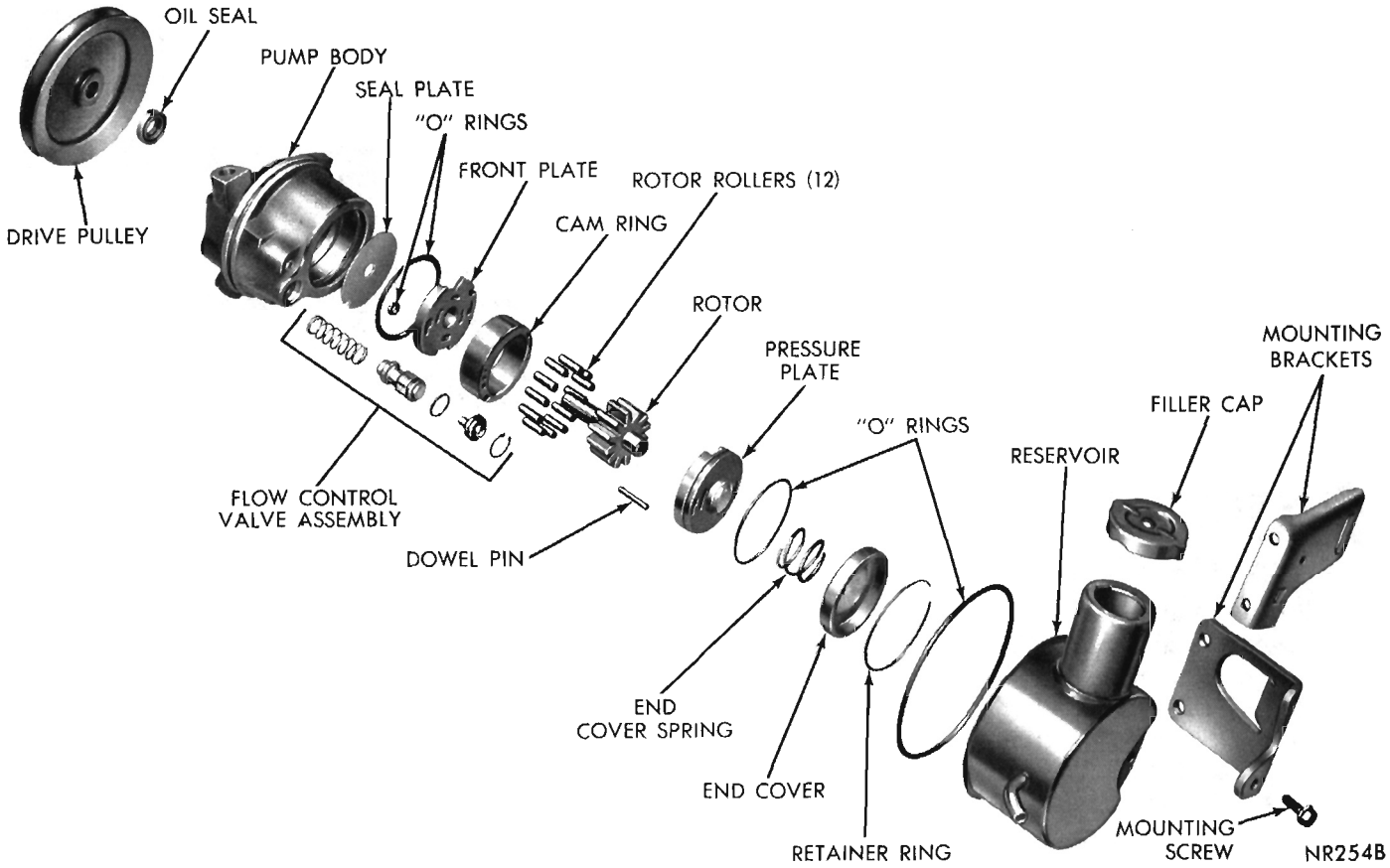

Fig. 25—1.06 Pump Disassembled View

valve and spring from housing. Discard "O" ring.

(12) If necessary to disassemble flow control valve for cleaning, see "Flow Control Valve Disassembly".

Inspection

(1) Remove clean out plug with allen wrench (Fig. 26).

(2) Wash all parts in clean solvent, blow out all passages with compressed air and air dry all cleaned parts.

(3) Inspect drive shaft for excessive wear and seal area for nicks or scoring. Replace if necessary.

(4) Inspect end plates, rollers, rotor and cam ring for nicks, burrs, or scratches. If any of the components are damaged to a degree that the efficiency of the pump is affected it is recommended that all the interior parts be replaced.

(5) Inspect pump body drive shaft bushing for excessive wear. Replace pump body and bushing as an assembly if badly worn or scored. (New pump body includes new flow control valve.)

Assembly

(1) Install 1/8 inch pipe clean out plug. Tighten to 80 inch-pounds.

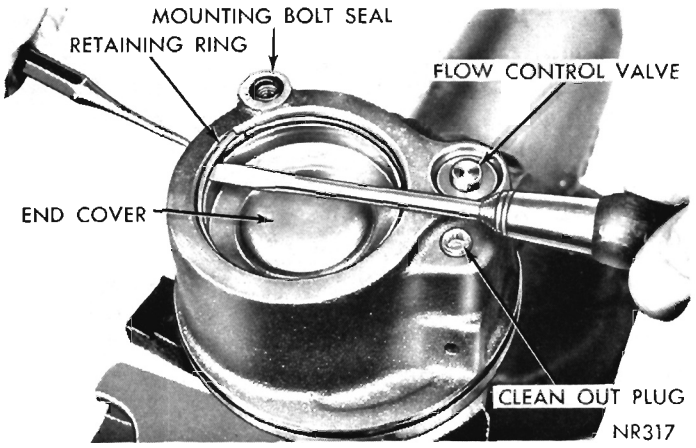

Fig. 26—Removing End Cover Retaining Ring

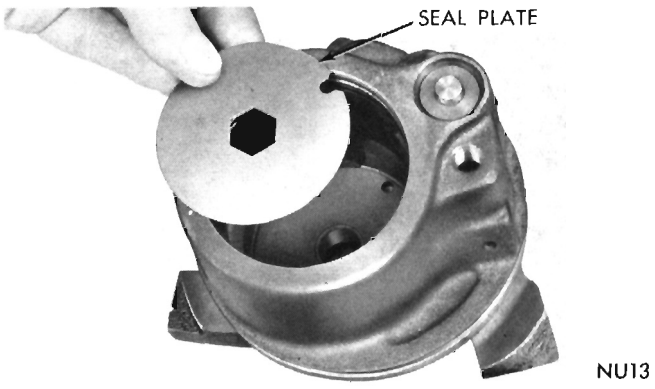

Fig. 27—Installing Seal Plate

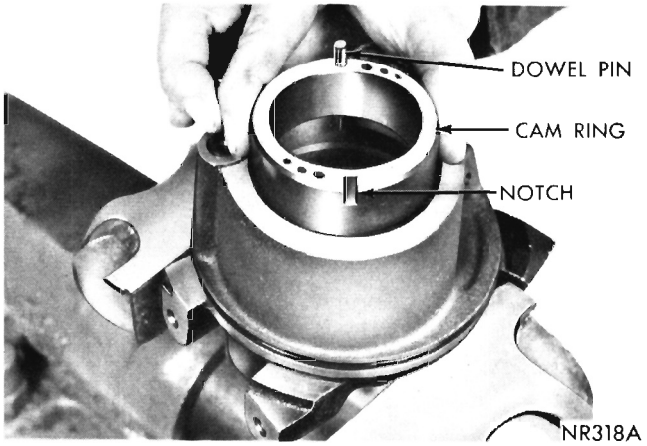

Fig. 28—Installing Cam Ring

(2) Place pump body on flat surface and drive new shaft seal into bore with Tool C-4061.

(3) Install new end cover, "O" ring in groove in pump bore. Lubricate with power steering fluid.

(4) Lubricate new large pump body to reservoir "O" ring and install on pump body.

(5) Install brass seal plate to bottom of housing bore. Align index notch in plate with dowel pin hole in housing. (Fig. 27).

(6) Carefully install front plate in pump bore. Chamfered edge first. Align index notch in plate with dowel pin hole in housing.

CAUTION: Use extreme care in aligning dowel pin. Pump can be completely assembled with dowel pin improperly positioned in end plates and not in indexing hole in housing.

(7) Place dowel pin in cam ring and position cam ring inside pump bore. Notch on cam ring must be up or away from pulley end of pump (Fig. 28). If cam ring has two notches, one machined and one cast, install with machined notch up. Machined notch has sharp corners and cast notch rounded corners.

If end of dowel pin in cam ring is more than 3/16 inch above surface of installed cam ring, it is not seated in index hole in housing.

(8) Install rotor and shaft in cam ring and carefully

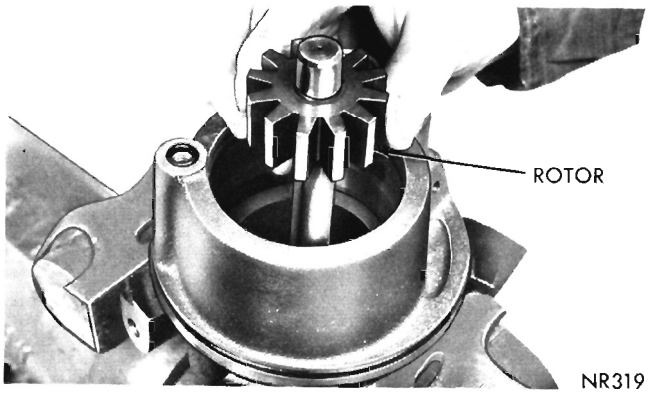

Fig. 29—Installing Rotor

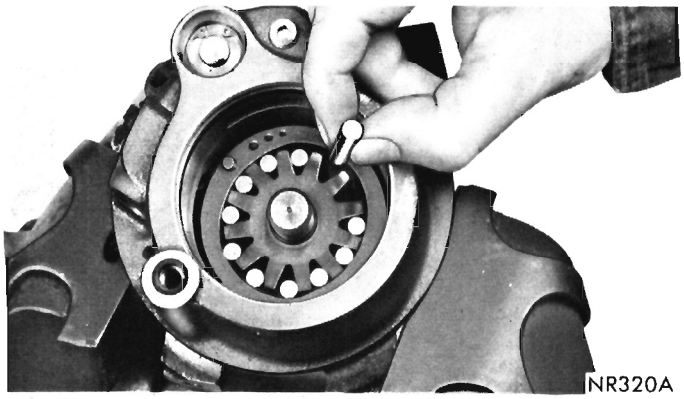

Fig. 30—Installing Rollers in Rotor

place 12 rollers in cavities of rotor (Figs. 29 and 30). Lubricate rotor, rollers, and cam I.D. with power steering fluid.

(9) Before installing pressure plate, rotate shaft by hand to make sure rollers are all seated parallel with pump shaft.

(10) To insure proper alignment of pressure plate to dowel pin, insert the largest possible number drill into the large 3/16 inch diameter oil hole in the cam ring, next to the cam notch. Select from a number 13 through 16 drill, clean thoroughly, and bottom on housing floor (Fig. 31).

(11) Install new "O" ring on pressure plate, lubricate with power steering fluid and carefully position in pump bore. Before seating plate in pump bore, align index notch in plate with dowel pin and oil passage slot in plate with number drill. Seat plate on cam ring using a clean 1-1/8 inch socket and plastic hammer (Fig. 32 and 33). Remove drill. Inspect pressure plate at both oil passage slots to insure that plate is squarely seated on cam ring end face.

(12) Place large coil spring over raised portion of installed pressure plate.

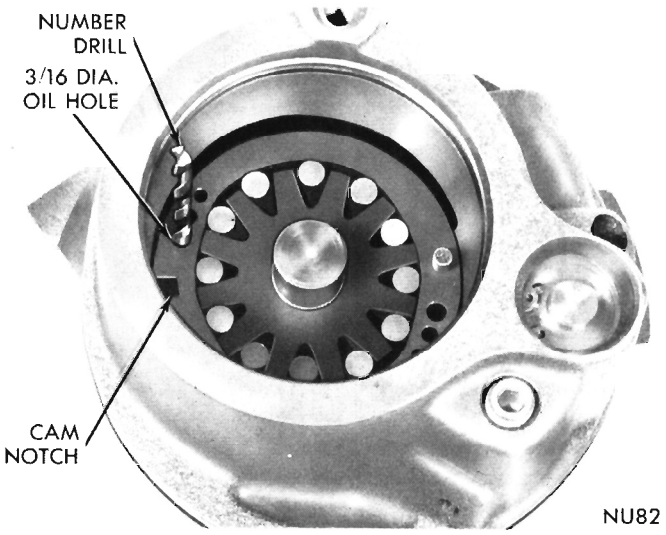

Fig. 31—Aligning Oil Holes

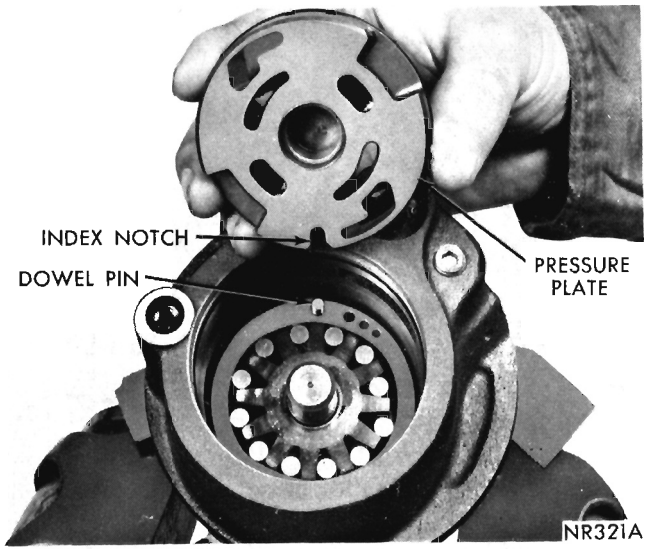

Fig. 32—Installing Pressure Plate

(13) Position end cover, lip edge UP, over spring. Press end cover down below retaining ring groove with thumb and install ring making sure it is seated in groove. Light tapping on the end cover may be necessary to insure that the end cover chamfer is squarely seated againt snap ring.

(14) Replace reservoir mounting bolt seal.

(15) Lubricate flow control valve with power steering fluid and insert valve spring and valve into bore. Install new "O" ring on bore plug, lubricate with power steering fluid and carefully install into bore. Install snap ring, with sharp edge UP.

CAUTION: Do not depress the bore plug more than 1/16 inch beyond snap ring groove.

(16) Place reservoir on pump body and visually align mounting bolt hole. Tap reservoir down on pump with plastic hammer.

(17) Remove pump from vise and install mounting brackets with three mounting bolts, tighten to 18 foot-pounds.

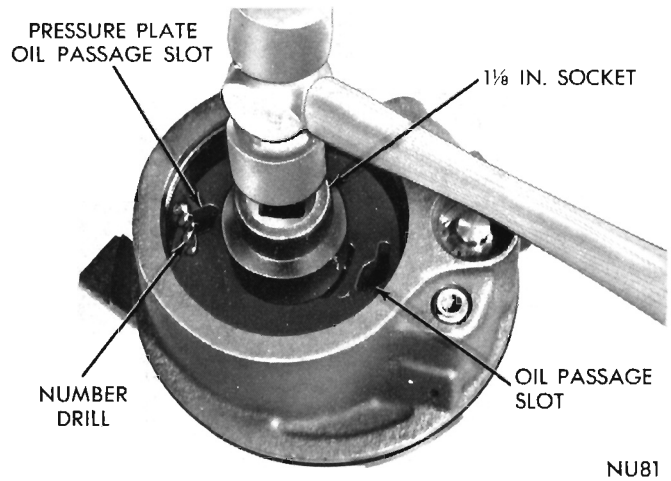

Fig. 33—Seating Pressure Plate

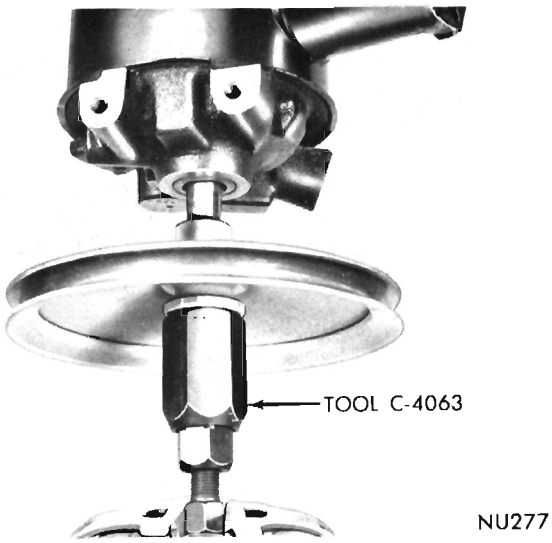

Fig. 34—Pulley Installation—6 Cylinder Engines

(18) Install drive pulley. See "Pulley Installation" (Figs. 34 and 35).

Power steering pump drive pulleys installed on six cylinder engines are not pressed flush with the end of the pump shaft. With drive pulley placed on end of shaft, securely thread installed Tool C-4063, **without** adapter, into 3/8 inch threaded hole in end of shaft. (Fig. 34).

Pumps installed on eight cylinder engines have drive pulleys pressed flush with the end of the pump shaft. With drive pulley placed on end of shaft, securely thread installer Tool C-4063, **with** adapter SP-5399, into 3/8 inch threaded hole in end of shaft (Fig. 35).

(19) With installer shaft clamped securely in vice, tighten drive nut against thrust bearing and press pulley onto shaft.

CAUTION: Do not attempt to press pulley on to shaft without the use of special tool as serious damage will result to interior of pump.

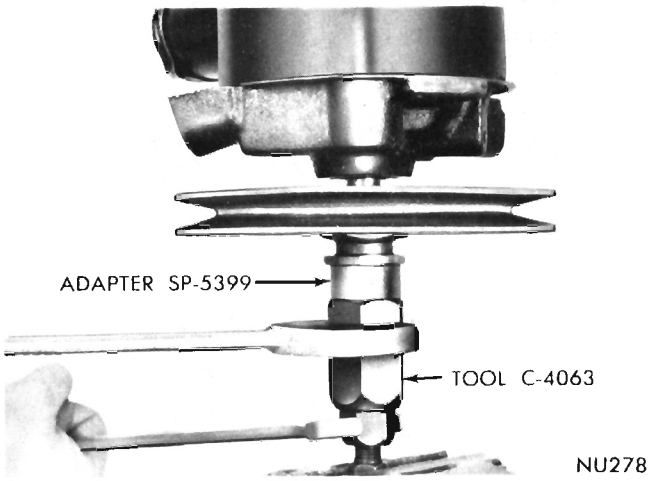

Fig. 35—Pulley Installation—8 Cylinder Engines

A small amount of drive shaft end play will be observed when pulley is installed. This movement is necessary and will be minimized by a thin cushion of oil between the rotor and end plates when pump is in operation.

(20) Install pump assembly on engine, connect hoses (using new pressure hose "O" ring), and tighten drive belt see "Cooling System". Group 7. Fill reservoir with power steering fluid, test and inspect for leaks.

FLOW CONTROL VALVE

Disassembly—1.06 Model

(1) Remove pump from engine and reservoir from pump.

(2) Remove snap ring and plug from flow bore. Discard "O" ring from plug.

(3) Depress control valve against spring pressure and allow to spring back. The valve should pop out of bore far enough to be lifted out. Light tapping on rear face of pump body may be necessary to remove a stuck valve.

If dirt or foreign particles are found on valve or within valve bore, entire pump should be disassembled, cleaned and rebuilt. The high pressure and return hoses must also be flushed and the steering gear valve body reconditioned see "Power Steering Gear". If valve bore is badly scored, replace pump body and flow control valve.

(4) Remove nicks or burrs that might cause the valve to stick by rubbing valve over a flat surface covered with crocus cloth.

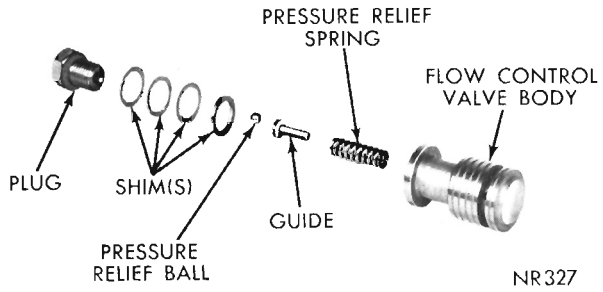

Fig. 36—Flow Control Valve Disassembled View

(5) Clamp land of valve in a soft jawed vise and remove hex head ball seat and shim(s). Note number and gauge of shims on ball seat. Same number and gauge of shims must be installed on assembly of valve. Altering shim thickness will change relief pressure.

(6) Remove valve from vise and remove pressure relief ball, guide and spring.

Assembly

(1) Insert spring, guide and pressure relief ball in end of flow control valve (Fig. 36).

(2) Install hex head ball seat using the same number and thickness shims as were removed. Tighten to 50 inch-pounds.

(3) Lubricate valve with power steering fluid and insert flow valve spring and valve in bore. Install new "O" ring on bore plug, lubricate with power steering fluid and carefully install into bore. Install snap ring. **CAUTION: Do not depress the bore plug more than 1/16 inch beyond snap ring groove.**

STEERING COLUMNS

CONTENTS

	Page
STEERING COLUMN (AUTOMATIC TRANSMISSION)	33
STEERING COLUMN (MANUAL TRANSMISSION)	39
SAGINAW COLUMN (AUTOMATIC TRANSMISSION	44
STEERING COLUMN (TILT-WHEEL)	48

STEERING COLUMN (AUTOMATIC TRANSMISSION)

INDEX

	Page
Assembly	37
Disassembly	36
Inspection	37
Installation	38
Removal	35

GENERAL INFORMATION

The steering column under head-on collision conditions is designed to telescope at a controlled rate. The telescoping action reduces the likelihood of the steering wheel being driven rearward toward the driver. If the driver is thrown forward into the wheel, the column can telescope further at the same con-

trolled rate, thereby, reducing force of the impact.

The column assembly (Fig. 1) has four principal components:

1. A column jacket with a mesh section designed to shorten in "accordion" fashion.
2. A two-piece telescoping transmission gearshift tube interconnected by plastic inserts and shear pins.
3. A two-piece telescoping steering shaft with upper and lower sections connected by plastic friction collars and shear pins.
4. A mounting bracket connecting steering column to the instrument panel, which allows the column to slide forward but blocks its rearward movement toward the driver.

The center section of the column jacket has diamond-shaped perforations and is formed with accordion pleats. These pleats allow it to compress like a bellows from impact forces.

The gearshift tube is made up of two sections designed to telescope together. These sections are interconnected and held together by injections of plastic that form the interconnecting inserts and shear pins. Under impact, the pins shear first, followed by a gradual paring away of the inserts by the knife-like edge in the adjoining tube section.

The steering shaft is a two-piece assembly. The upper piece is solid and has a double-flatted lower section. The lower piece is hollow and formed to fit over the double-flatted section of the upper piece. The purpose of the flatted section is to provide continued steering action even though completely telescoped. Plastic is injected through two small holes in the hollow piece into a pair of annular grooves on the solid portion of the shaft. The four small holes filled with plastic form the shear pins. Upon impact, the shear pins break off and the shaft gradually telescopes against a resistance provided by the plastic collars in the annular grooves.

The mounting bracket is designed to restrain the column from being shifted toward the driver during impact. It incorporates three "break-away capsules" that allow the mounting bracket to slip off the attaching points, permitting the steering column to compress or yield in a forward direction under a severe impact from the driver side.

When the column is installed in a car it is no more susceptible to damage through ordinary usage than previous columns; however, when it is removed, special care must be taken in handling this assembly. When the column is removed from the car such actions as a sharp blow on the end of the steering shaft or shift levers, leaning on the column assembly, or

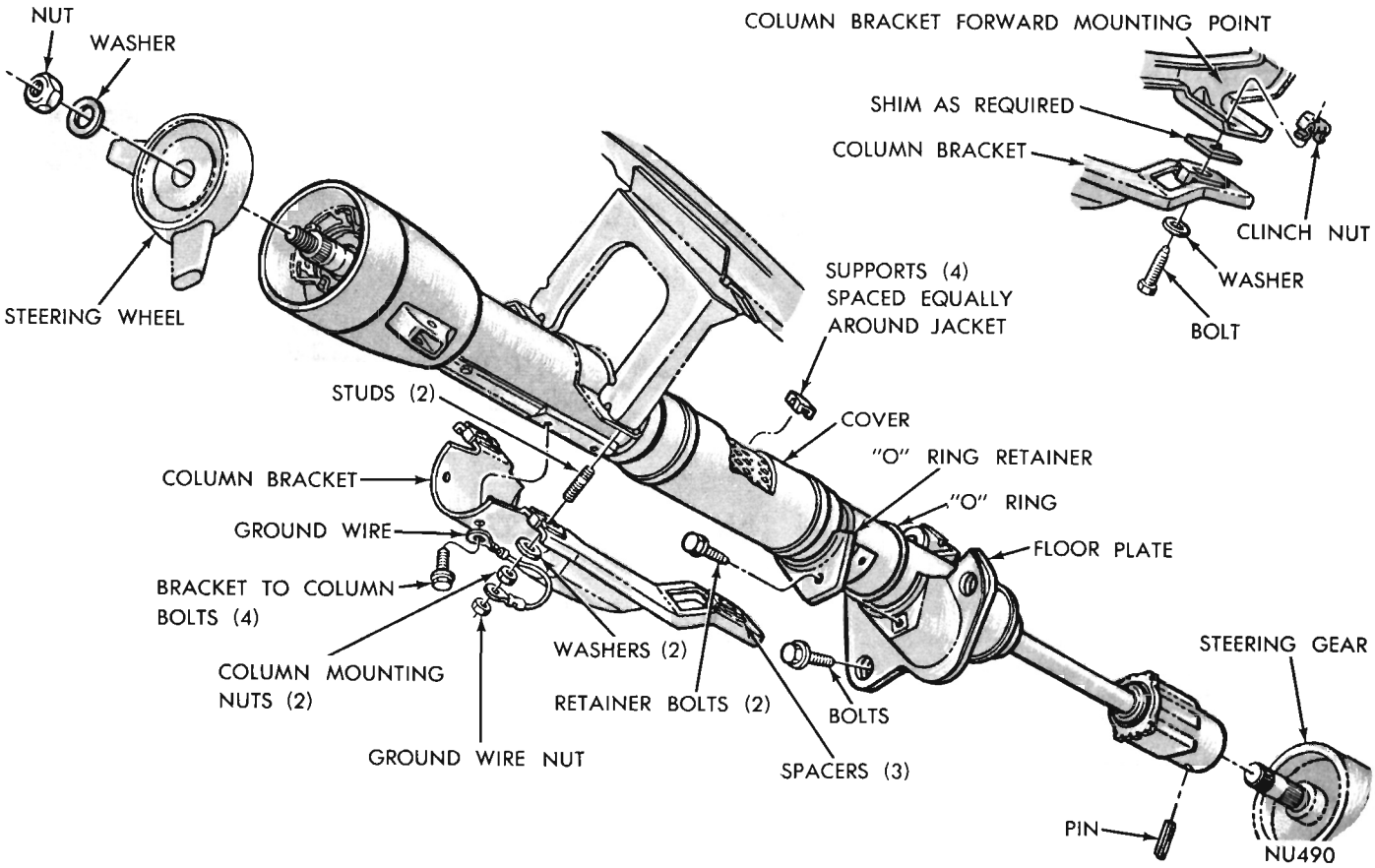

Fig. 1—Steering Column Mounting (Except Fury)

dropping of the assembly could shear or loosen the plastic shear joints that maintain column rigidity. It is, therefore, suggested that the removal and installation, and the disassembly and reassembly procedures be carefully followed when servicing this assembly.

IMPORTANT: Bumping, jolting and hammering on the steering shaft and gearshift tube must be avoided during all servicing operations. If the shear pins are broken, the controlled rate of the impact-absorbing features will be destroyed making these parts unfit for further use. The Special Tools required and their usage are covered in the following service procedures.

SERVICE PROCEDURES

STEERING COLUMN (Automatic Transmission)

Removal (Fig. 1 or 2)

(1) Disconnect negative (ground) cable from battery.

(2) Disconnect shift linkage rod from lever at lower end of steering column.

(3) Remove steering shaft lower coupling to wormshaft roll pin.

(4) Disconnect wiring connectors at steering column jacket.

(5) Remove horn ring ornament assembly by turning counterclockwise.

(6) Disconnect wire at horn switch. Remove three screws attaching horn ring and switch to steering wheel, then remove horn ring and switch.

(7) Remove steering wheel retaining nut and washer. Remove steering wheel with Tool C-3428A. **Do not bump or hammer on steering shaft to remove wheel.** Remove turn signal lever.

(8) Remove floor plate to floor pan attaching screws. Remove finish plate from under instrument panel to expose steering column bracket.

On Fury Models, be sure to disconnect gearshift indicator pointer (Fig. 3) before lowering steering column from instrument panel.

(9) Remove nuts and one bolt attaching steering column bracket to instrument panel support. Save shim pack from between bracket forward leg and support for re-use during installation.

(10) Carefully pry lower coupling from steering gear wormshaft, then remove column assembly out through passenger compartment being careful not to damage paint or trim.

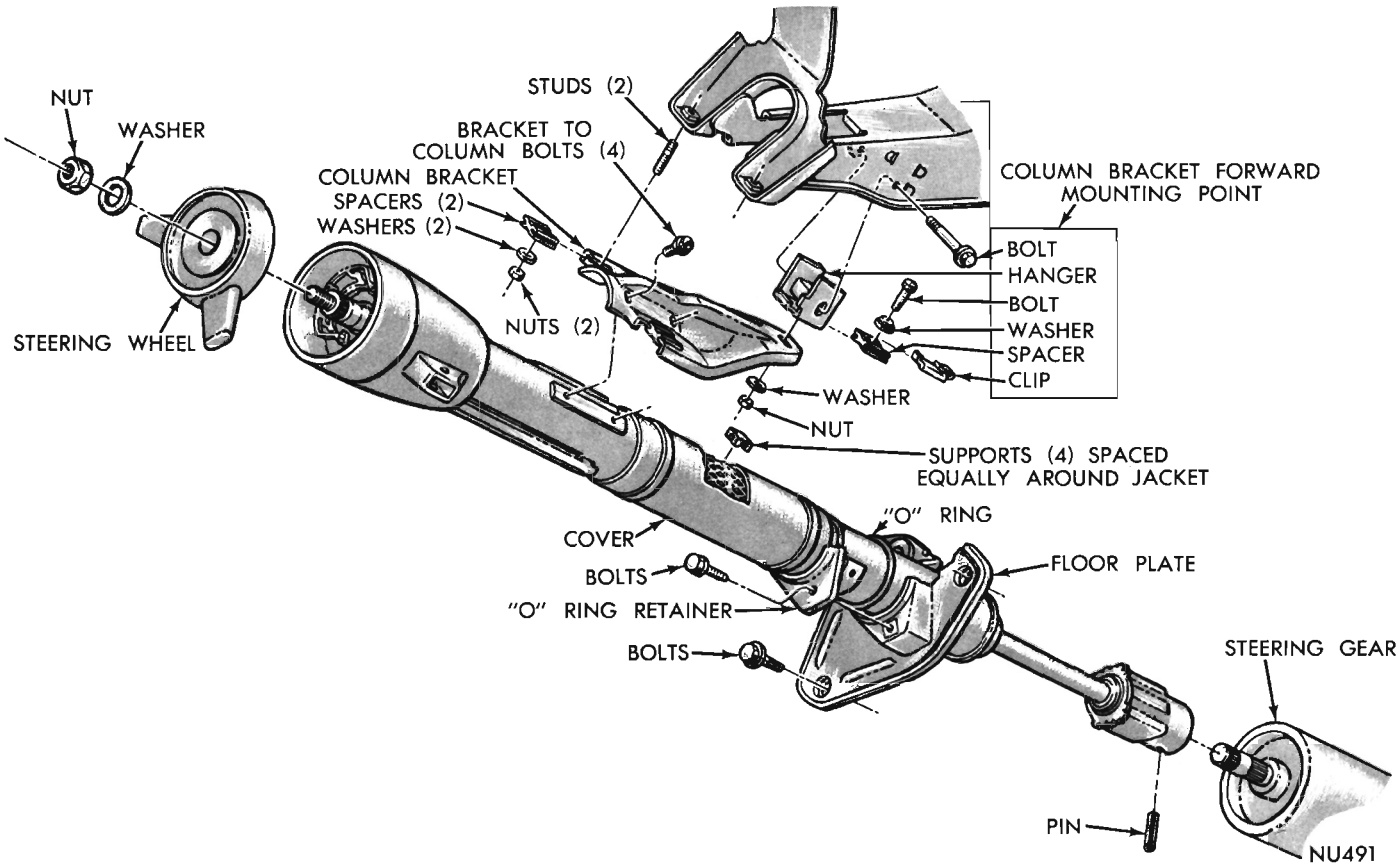

Fig. 2—Steering Column Mounting (Fury)

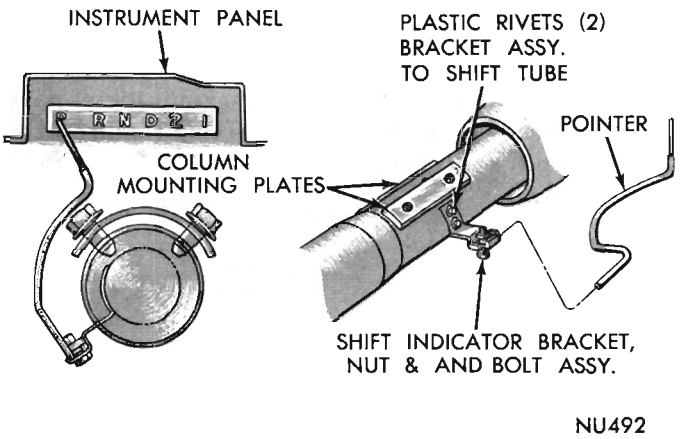

Fig. 3—Gearshift Indicator Mounting (Fury Models)

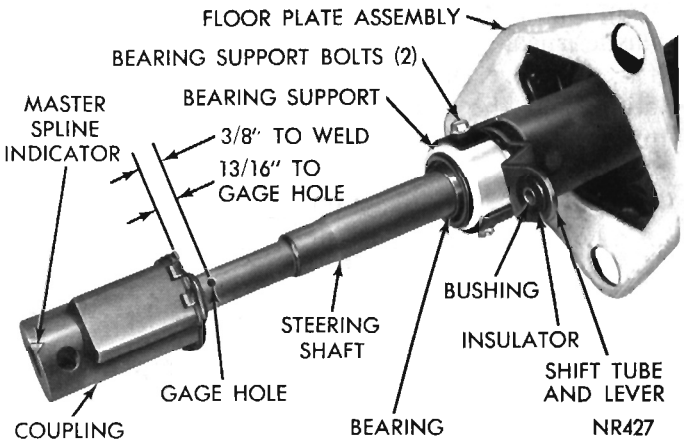

Fig. 5—Steering Column—Lower End

Disassembly

(1) Remove four bolts attaching bracket assembly to column jacket.

(2) Remove two screws and lift off wiring trough.

(3) Attach Column Holding Fixture C-4048 to column jacket and clamp the assembly in a vise.

(4) **Fury Models:** Carefully pry upward on one end of gearshift indicator operating lever to remove from gearshift tube (Fig. 3).

(5) Drive out gearshift lever pivot pin, then remove lever and spring from housing.

(6) Remove snap ring from upper end of steering shaft (Fig. 4). Remove turn signal switch and upper bearing retainer screws. Remove retainer and lift switch upward out of the way.

(7) Remove two bolts holding lower bearing and support to lower end of column jacket (Fig. 5). Install steering shaft remover C-4044 (Fig. 6), and press shaft out of upper bearing. Slide steering shaft and lower bearing assembly out of column. **Do not bump or hammer on steering shaft to remove.**

(8) While pulling slightly on wire (Fig. 7), insert

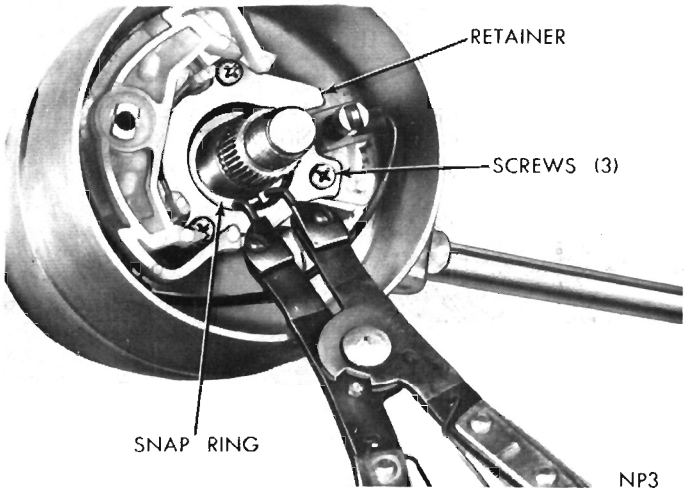

Fig. 4—Removing or Installing Steering Shaft Snap Ring

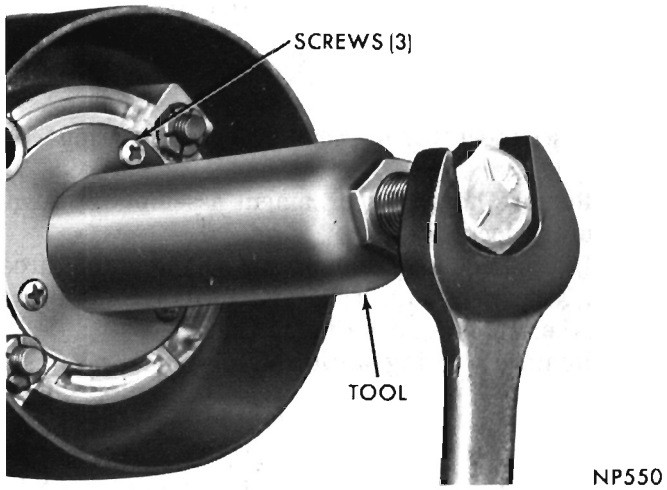

Fig. 6—Removing Steering Shaft from Upper Bearing

a small screwdriver (with thin blade) above and below terminal to release tangs, then pull wire from connector. Remove all wires in same manner.

(9) Remove the two bearing housing retaining nuts (Fig. 8 or 9). Unsnap dial pointer from lug on gearshift housing, if so equipped. Take bearing housing

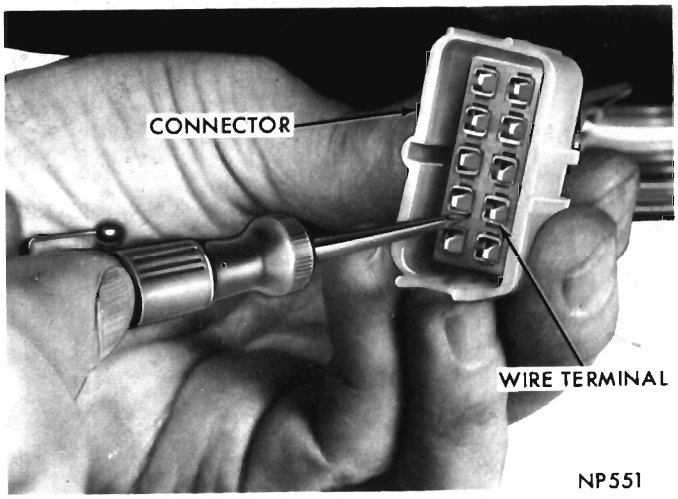

Fig. 7—Removing Wires from Connector

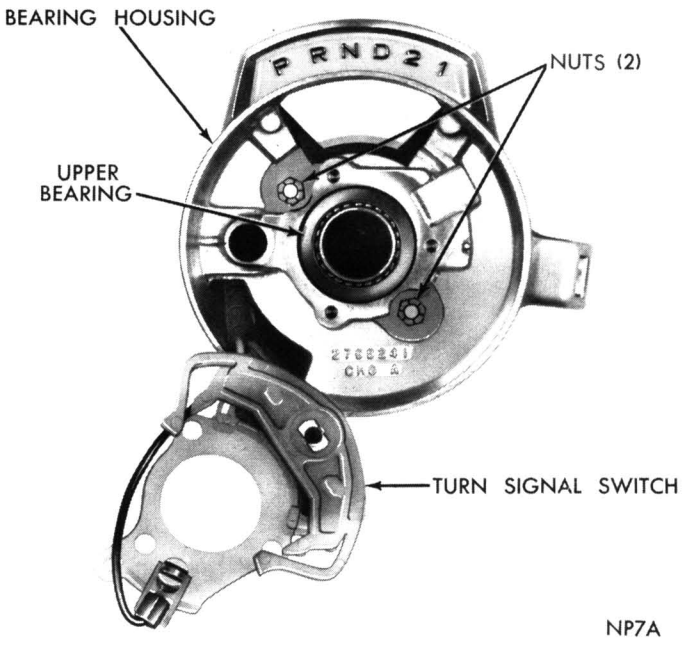

Fig. 8—Removing or Installing Bearing Housing

off end of jacket and carefully pull wiring through gearshift housing.

(10) If shift lever gate requires replacement (Fig. 10), remove the two attaching screws and separate gate from bearing housing.

(11) Loosen gearshift tube lock screw in gearshift housing with an allen wrench (Fig. 11), then carefully lift housing and spring washer off gearshift tube. **Do not bump or hammer on housing or gearshift tube to remove.**

(12) Slide gearshift tube out of jacket and remove floor plate assembly from the jacket.

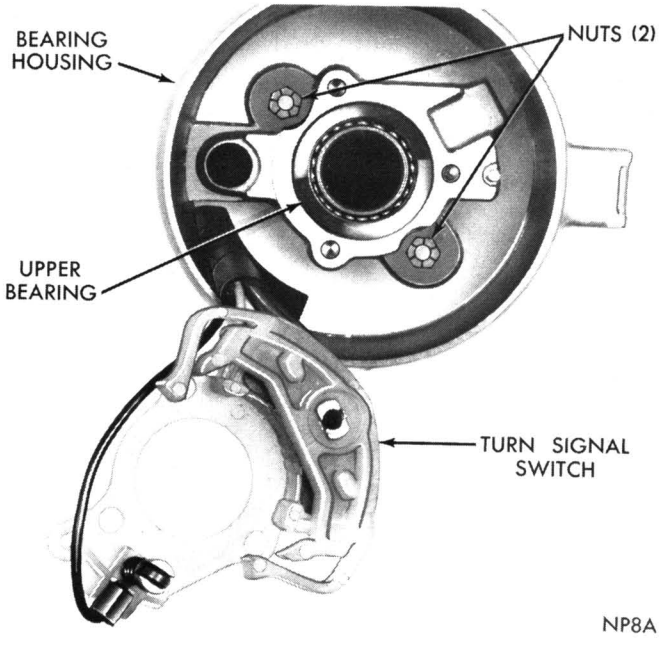

Fig. 9—Removing or Installing Bearing Housing

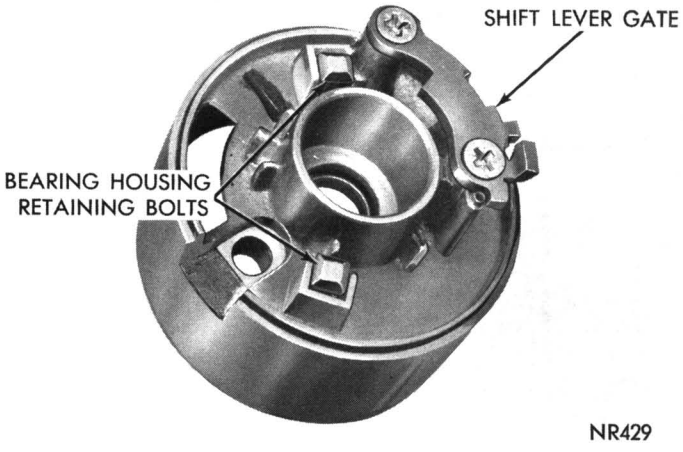

Fig. 10—Shift Lever Gate Installed

Inspection

After cleaning, inspect all parts for wear or damage. Note condition of shift lever gate and inner end of shift lever. Inspect turn signal switch for distortion, broken or damaged parts. Inspect wiring insulation for worn or bare spots.

Inspect steering shaft bearing for smooth operation, and lubricate with Multi-Purpose Chassis Lubricant or similar lubricant. If bearing has any signs of roughness or wear, it should be replaced.

Assembly

Apply a thin coating of Multi-Purpose grease to all friction surfaces.

(1) Install column holding fixture and clamp column in a vise with both ends of column accessible.

(2) Coat spring washer with grease and install on lower hub of gearshift housing. Position gearshift housing on the jacket.

(3) Install two bearing housing retaining bolts (Fig. 10) and start nuts about three turns.

(4) With turn signal wiring threaded through bearing housing, install the assembly while guiding wiring through gearshift housing. Position bearing housing on end of jacket engaging the bolt heads in slots in jacket, then tighten the two retaining nuts to 50 inch-pounds (Fig. 8 or 9).

(5) Lubricate floor plate O-ring with a soap solution or rubber lubricant and slide floor plate assembly on steering column. **The floor plate assembly must be installed before installing shift tube and lever.**

(6) With dust washer installed on gearshift tube, slide the assembly into jacket. Guide upper key of tube into gearshift housing. Press it firmly into housing, **with hand pressure, and tighten lock screw** (Fig. 11).

(7) Place insulator over column upper bearing and install assembly into bearing housing bore (Fig. 8 or 9). Use a soap solution or rubber lubricant to ease installation.

(8) Install bearing and support into lower end of

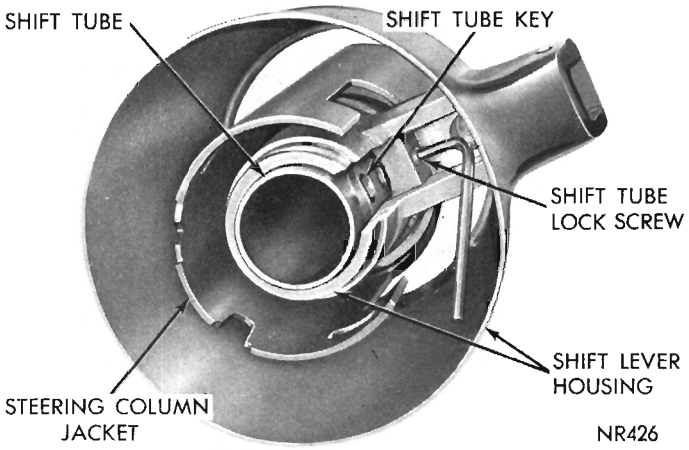

Fig. 11—Removing or Installing Gearshift Tube Lock Screw

column (Fig. 5) and tighten two retaining bolts to 30 inch pounds.

(9) Install snap ring in lower groove on upper end of steering shaft. Slide shaft assembly into column and through upper bearing **by hand.** Install Tool C-3879, washer and steering wheel nut (Fig. 12). Turn nut to pull shaft through bearing, then install upper snap ring.

(10) Position turn signal switch in bearing housing, install switch retainer plate (And dial lamp if so equipped) and secure with the three screws. **On models with shift dial on bearing housing** (Fig. 8) guide pointer over dial, then snap base of pointer on lug provided on gearshift housing.

(11) Install gearshift lever spring into gearshift housing (Fig. 13). Push gearshift lever into housing on top of spring until inner end of lever slides past the gate, then install roll pin.

(12) Bend turn signal wiring terminal tangs outward slightly (Fig. 14) then insert in proper location

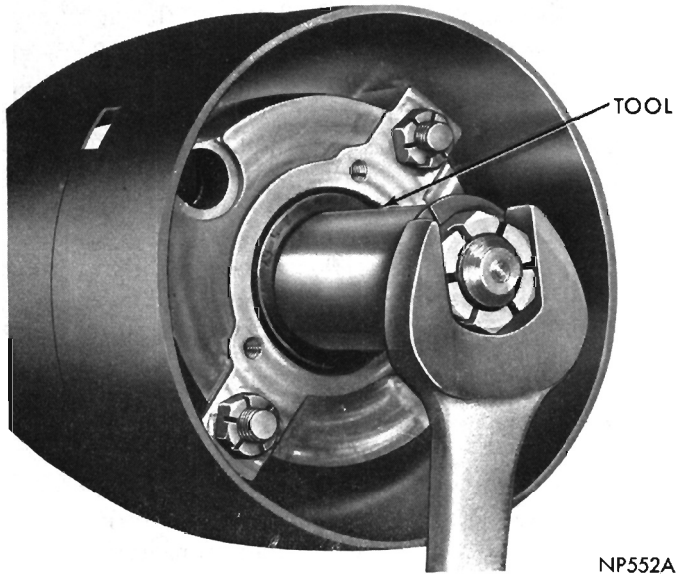

Fig. 12—Pulling Shaft Through Bearing

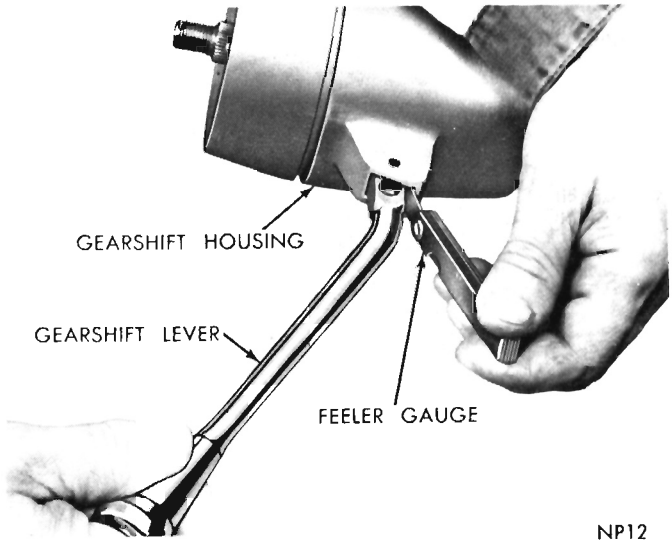

Fig. 13—Installing Gearshift Lever

in the connector (Fig. 15). Install wiring trough with two screws.

(13) **Fury Models:** With gearshift lever in neutral position, attach indicator operating bracket to shift tube with two new plastic rivets (Fig. 2).

Column Installation (Fig. 1 or 2)

(1) Position bracket assembly on steering column and install and tighten the four **short** retaining screws to 95 inch-pounds. Insert column assemby through floor pan opening, being careful not to damage paint or trim.

(2) With front wheels in straight ahead position and master splines on wormshaft and coupling aligned, engage coupling with wormshaft and install the roll pin.

(3) Hold column assembly with bracket against the instrument panel support. Install but **do not tighten** the two upper bracket nuts.

(4) **Center steering shaft coupling at midpoint of its travel.** This is accomplished by moving column

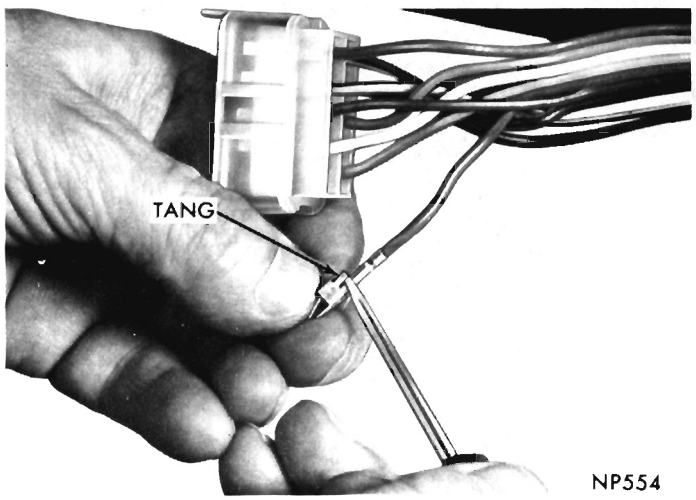

Fig. 14—Spreading Tang on Wire Terminal

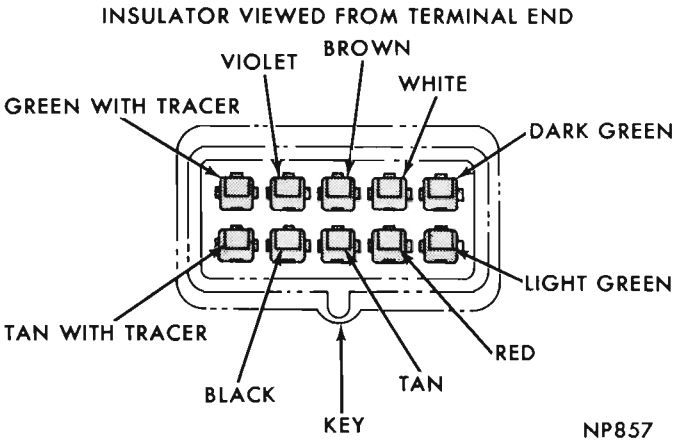

Fig. 15—Turn Signal Color Code

and bracket assembly fore and aft in the instrument panel support so dimension between top of coupling and center of gauge hole is 13/16 inch (Fig. 5). Tighten the two upper bracket nuts to 140 inch-pounds. **Valiant and Barracuda models with power steering** have no gauge hole in the steering shaft. Measure from top of coupling to weld on steering shaft. Adjust to 3/8 inch.

(5) Position floor plate over floor pan opening, centering it around the column, then install and tighten retaining bolts. Slide "O" ring down the jacket and into recess in floor plate, position retaining plate over "O" ring and secure with the two bolts. **Do not pry to align plates and attaching bolts or column misalignment will occur.**

(6) Place shim pack between column bracket forward leg and instrument panel support. **Maximum shim pack thickness error must not exceed .060 inch before tightening the bolt.** Add shims, if necessary, then tighten bolt to 140 inch-pounds. **Fury Models:** loosen bolt attaching the forward adjustable hanger to the instrument panel support. Attach column bracket forward leg to the hanger and tighten to 140 inch-pounds. **Then tighten the hanger to instrument panel support bolt to 200 inch-pounds.**

(7) **Fury Models:** Connect gearshift indicator pointer (Fig. 3) to operating bracket on shift tube in its approximate original location. Slowly move gearshift lever from "I" (low) to "P" (park) pausing briefly at each selector position. The indicator pointer must align with each selector position. If necessary, loosen the bolt and readjust to align pointer correctly.

(8) Attach finish plate to bottom of instrument panel.

(9) Install turn signal lever.

(10) Place steering wheel on steering shaft with master splines aligned. Install retaining nut and washer, tighten nut to 27 foot-pounds. **Do not drive wheel on shaft, draw wheel down with retaining nut.**

(11) Install horn switch parts previously removed from steering wheel. Connect horn switch wire. Install horn ring ornament and lock by turning clockwise.

(12) Connect wiring connectors at steering column jacket. Connect battery ground cable, test operation of lights and horns.

(13) Connect and adjust gearshift linkage, refer to "Transmission Group".

STEERING COLUMN (MANUAL TRANSMISSION)

INDEX

	Page
Assembly	40
Disassembly	40
Inspection	40
Installation	43
Removal	39

Removal (Fig. 1 or 2)

(1) Disconnect negative (ground) cable from battery.

(2) Disconnect shift linkage rods from levers at lower end of steering column.

(3) Remove steering shaft lower coupling to wormshaft roll pin.

(4) Disconnect wiring connectors at steering column jacket.

(5) Remove horn ring ornament assembly by turning counterclockwise.

(6) Disconnect wire at horn switch. Remove three screws attaching horn ring and switch to steering wheel, then remove horn ring and switch.

(7) Remove steering wheel retaining nut and washer. Remove steering wheel with Tool C-3428A. **Do not bump or hammer on steering shaft to remove wheel.** Remove turn signal lever.

(8) Remove floor plate to floor pan attaching screws. Remove finish plate from under instrument panel to expose steering column bracket.

(9) Remove nuts and one bolt attaching steering column bracket to instrument panel support. Save shim pack from between bracket forward leg and support for reuse during installation.

(10) Carefully pry lower coupling from steering gear wormshaft, then remove column assembly out through passenger compartment being careful not to damage paint or trim.

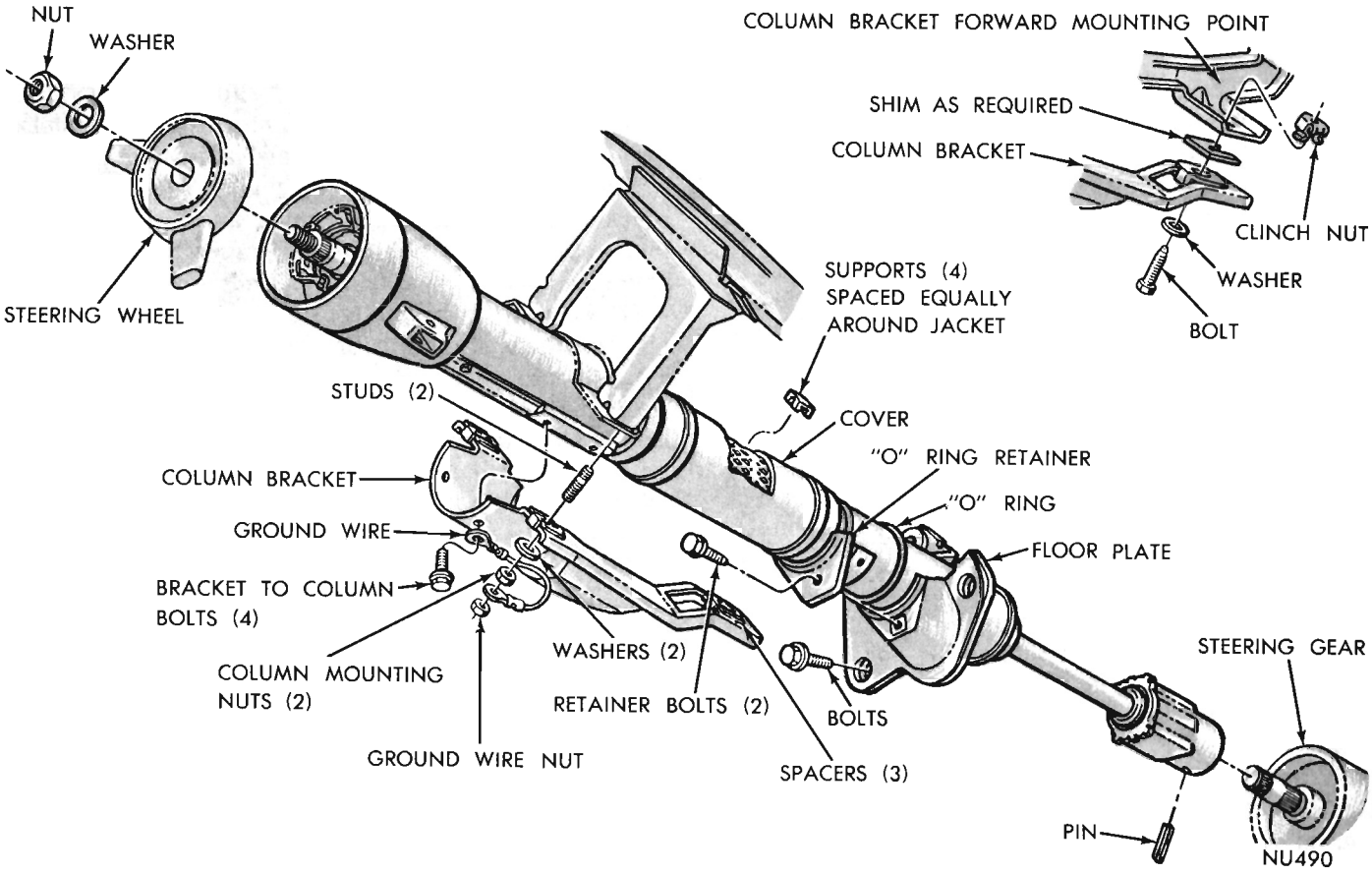

Fig. 1—Steering Column Mounting (Except Fury)

Disassembly

(1) Remove four bolts attaching bracket assembly to column jacket (Fig. 1).

(2) Remove two screws and lift off wiring trough. Attach Column Holding Fixture C-4048 to column jacket and clamp the assembly in a vise.

(3) Drive out gearshift lever pivot pin, then remove lever and spring from housing.

(4) Remove snap ring from upper end of steering shaft (Fig. 3). Remove turn signal switch and upper bearing retainer screws. Remove retainer and lift switch upward out of the way.

(5) Install steering shaft remover C-4044 (Fig. 4), and press shaft out of upper bearing. Slide steering shaft assembly out of column. **Do not bump or hammer on steering shaft to remove.**

(6) While pulling slightly on wire (Fig. 5), insert a small screwdriver (with thin blade) above and below terminal to release tangs, then pull wire from connector. Remove all wires in same manner.

(7) Remove three screws securing lower support in the column jacket (Fig. 6), slide support and bearing assembly out of jacket. Remove low-reverse lever and spacer from shift tube.

(8) Remove two lower shift tube bushing retaining screws at slotted holes in jacket (Fig. 6). Slide shift tube with 2nd and direct lever, bushing, spring and spring retainer out of jacket (Fig. 7).

(9) Remove nuts from the two bearing housing retaining bolts (Fig. 8). Remove bearing housing and carefully pull wiring through gearshift housing. Remove bearing and insulator from bearing housing.

(10) Remove gearshift housing and spring washer from end of jacket.

Inspection

After cleaning, inspect all parts for wear or damage. Note condition of pins in two lower shift levers, shift lever socket at top end of shift tube, and inner end of shift lever.

Inspect steering shaft upper bearing for smooth operation, and lubricate with Multi-Purpose Chassis Lubricant or similar lubricant. If bearing has any signs of roughness or wear, it should be replaced. Replacement bearings are pre-lubricated.

Assembly

Apply a thin coating of Multi-Purpose grease to all friction surfaces.

(1) Install column holding fixture and clamp column in a vise with both ends of column accessible.

(2) Coat spring washer with grease and install on lower hub of gearshift housing. Position gearshift housing on the jacket.

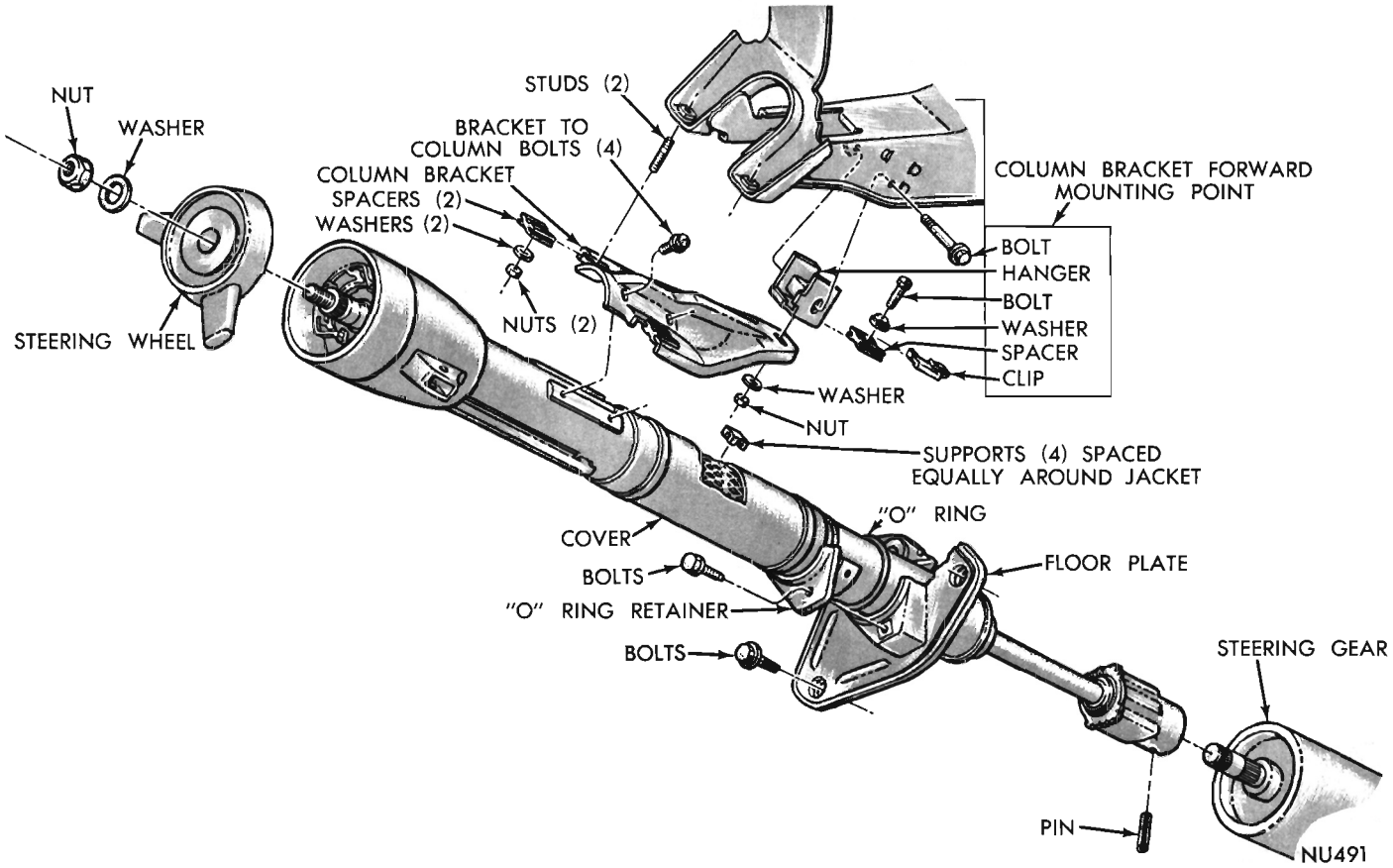

Fig. 2—Steering Column Mounting (Fury)

(3) Place two bearing housing retaining bolts in position in housing and just start retaining nuts (Fig. 8), then thread turn signal wiring through the housing.

(4) Install bearing housing while guiding wiring through gearshift housing. Position housing so bolt heads engage in slots in column jacket. Tighten bolt nuts alternately and evenly in steps to prevent unseating bolt heads from the slots.

(5) Lubricate floor plate O-ring with a soap solution or rubber lubricant and slide floor plate assembly on steering column. **The floor plate assembly must be installed before installing shift tube and lever.**

(6) Turn bushing on shift tube (Fig. 7) so the two holes in bushing are aligned with centerline of 2nd and direct shift lever. Slide shift tube and lever assembly through jacket and into gearshift housing, start the two bushing retaining screws through slots in jacket but do not tighten.

(7) Install spacer (Fig. 6) around selector lever so it rests against 2nd and direct shift lever. Install low and reverse lever. Then install support and

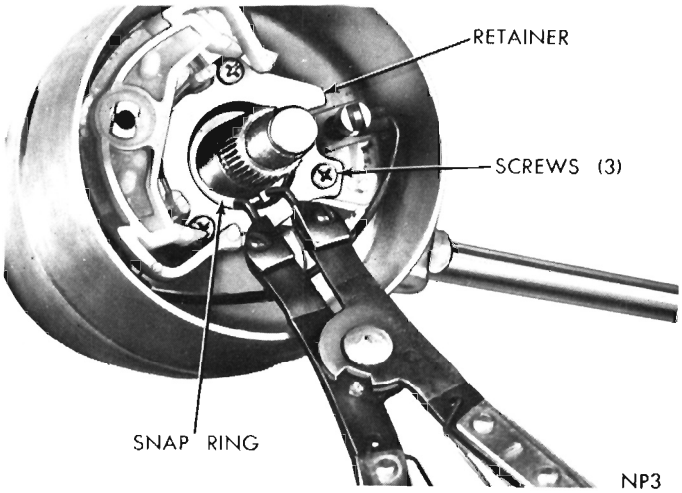

Fig. 3—Removing or Installing Steering Shaft Snap Ring

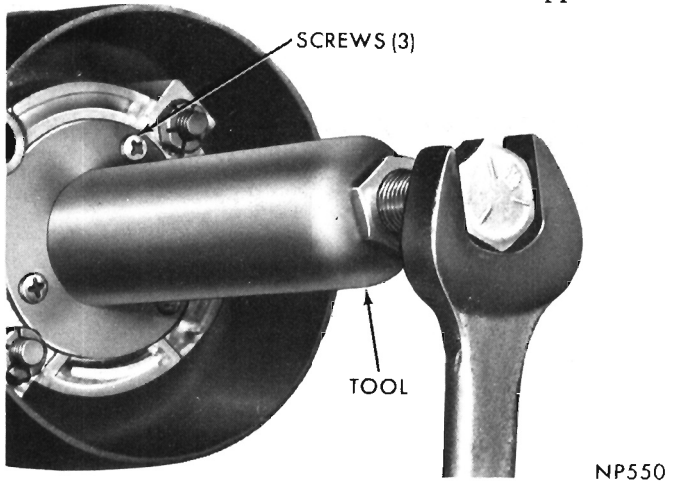

Fig. 4—Removing Steering Shaft from Upper Bearing

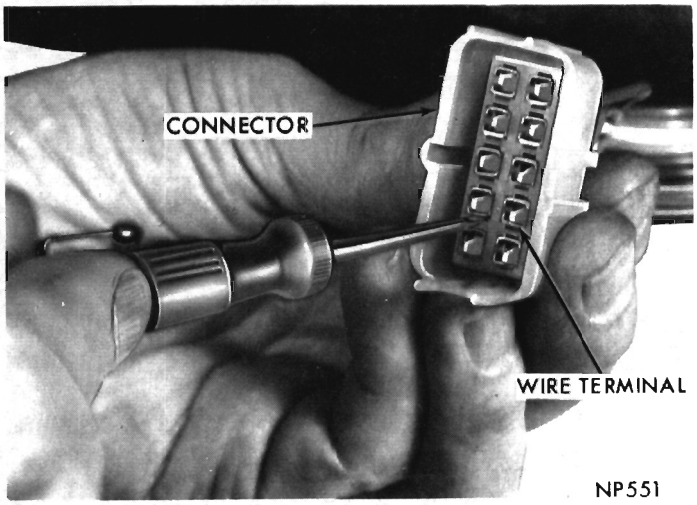

Fig. 5—Removing Wires from Connector

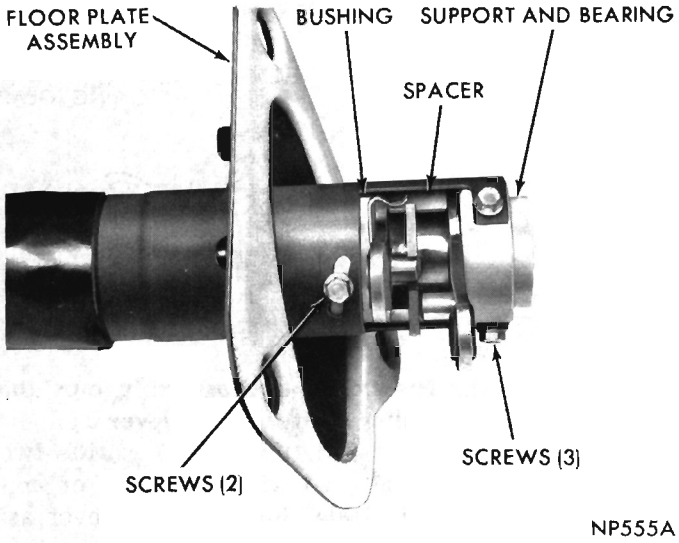

Fig. 6—Shift Tube and Levers—Assembled

bearing assembly, install and tighten the three retaining screws to 30 inch-pounds.

(8) Rotate bushing (Fig. 6) to where all play at

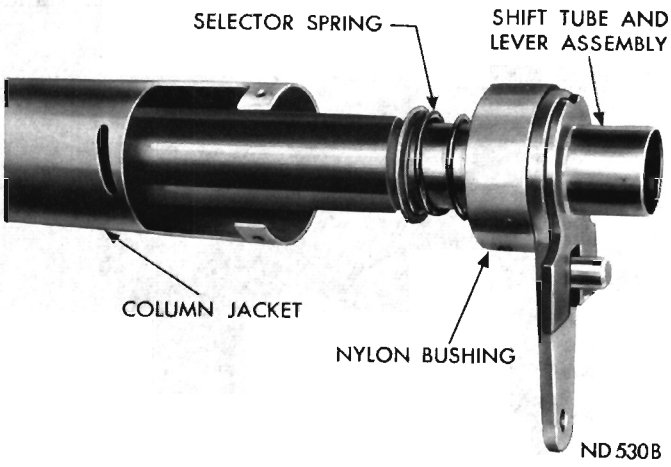

Fig. 7—Removing Shift Tube Assembly

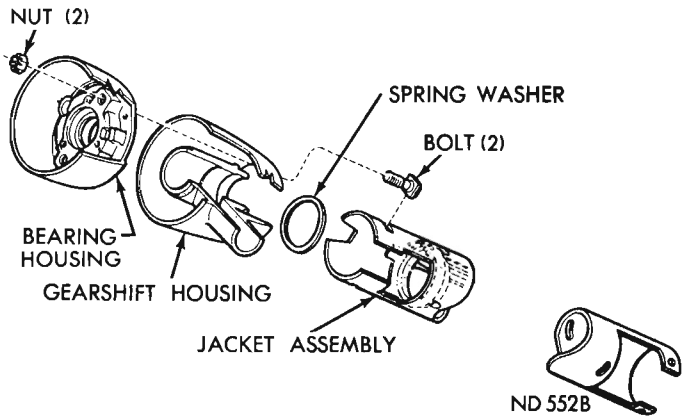

Fig. 8—Upper End of Column—Disassembled

shift levers and spacers is eliminated, but no binding occurs. With bushing in this position, tighten the two bushing to jacket screws to 30 inch-pounds.

(9) Place a screw driver blade between 2nd and direct shift lever and cross-over blade so it will be held in neutral position half way between the two shift levers (Fig. 9).

(10) Position gearshift lever and spring in housing so ball end with insulator ring engages hole in shift tube key. Align and install retaining roll pin.

(11) Place insulator over column upper bearing and install assembly into bearing housing bore (Fig. 8). Use a soap solution or rubber lubricant to ease installation.

(12) Install snap ring in lower groove on upper end of steering shaft. Slide shaft into column and through upper bearing **by hand.** Install Tool C-3879, washer and steering wheel nut (Fig. 10). Turn nut to pull shaft through bearing, then install upper snap ring.

(13) Position turn signal switch in bearing housing, install switch retainer plate and secure with the three screws.

(14) Bend turn signal wiring terminal tangs outward slightly (Fig. 11). Then install wires in their

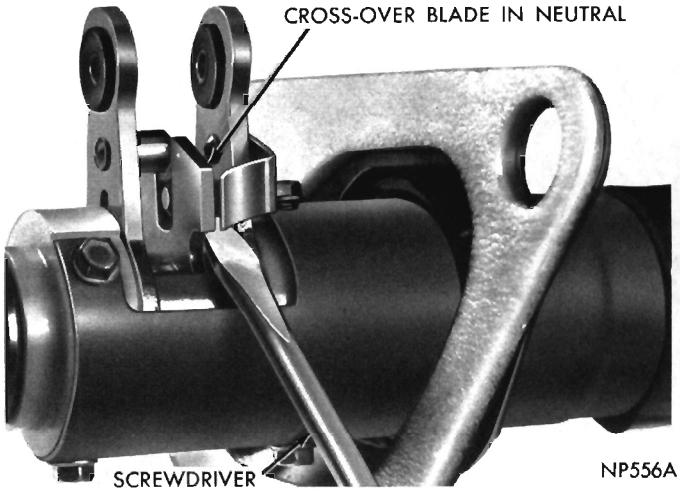

Fig. 9—Holding Cross-Over Blade in Neutral Position

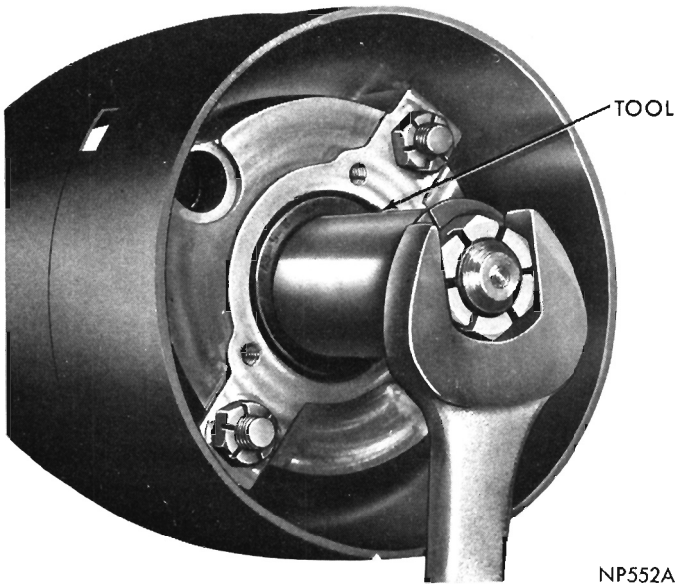

Fig. 10—Pulling Shaft Through Bearing

proper location in the connector (Fig. 12). Install wiring trough and secure with the two screws.

(15) Position bracket assembly on steering column (Fig. 1), install and tighten the four **short** retaining screws to 95 inch-pounds.

Installation (Fig. 1 or 2)

(1) Insert column assembly through floor pan opening, being careful not to damage paint or trim.

(2) With front wheels in straight ahead position and master splines on wormshaft and coupling aligned, engage coupling with wormshaft and install the roll pin.

(3) Hold column assembly with bracket against the instrument panel support. Install but **do not tighten** the two upper bracket nuts.

(4) **Center steering shaft coupling at midpoint of its travel.** This is accomplished by moving column and bracket assembly fore and aft in the instrument

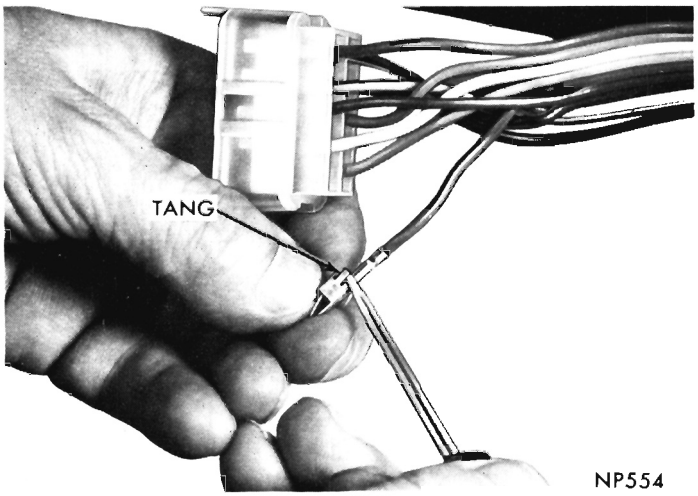

Fig. 11—Spreading Tang on Wire Terminal

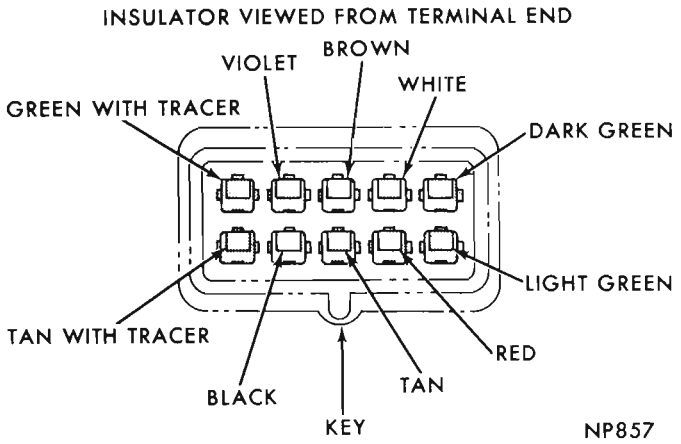

Fig. 12—Turn Signal Color Code

panel support so dimension between top of coupling and center of gauge hole is 13/16 inch (Fig. 13). Tighten the two bracket nuts to 140 inch-pounds. **Valiant and Barracuda models with power steering** have no gauge hole in the steering shaft. Measure from top of coupling to weld on steering shaft. Adjust to 3/8 inch.

(5) Position floor plate over floor pan opening, centering it around the column, then install and tighten retaining bolts. Slide "O" ring down the jacket and into recess in floor plate, position retaining plate over "O" ring and secure with the two bolts. **Do not pry to align plates and attaching bolts or column misalignment will occur.**

(6) Place shim pack between column bracket forward leg and instrument panel support. **Maximum shim pack thickness error must not exceed .060 inch before tightening the bolt.** Add shims, if necessary, then tighten bolt to 140 inch-pounds. **Fury Models:** loosen bolt attaching the forward adjustable hanger to the instrument panel support. Attach column bracket forward leg to the hanger and tighten to 140 inch-pounds. **Then tighten the hanger to instrument panel support bolt to 200 inch-pounds.**

(7) Attach finish plate to bottom of instrument panel.

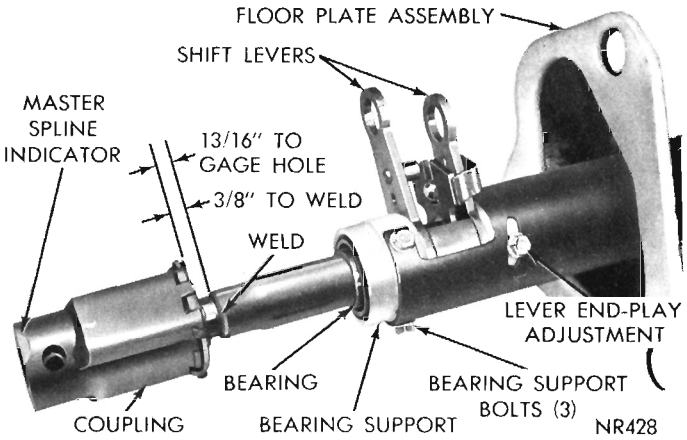

Fig. 13—Steering Column—Lower End

(8) Install turn signal lever.

(9) Place steering wheel on steering shaft with master splines aligned. Install retaining nut and washer, tighten nut to 27 foot-pounds. **Do not drive wheel on shaft, draw wheel down with retaining nut.**

(10) Install horn switch parts previously removed from steering wheel. Connect horn switch wire. Install horn ring ornament and lock by turning clockwise.

(11) Connect wiring connectors at steering column jacket. Connect battery ground cable, test operation of lights and horns.

(12) Connect and adjust gearshift linkage, refer to "Transmission Group".

SAGINAW COLUMN (AUTOMATIC TRANSMISSION)

INDEX

	Page		Page
Assembly	46	Installation	48
Disassembly	44	Removal	44
Inspection	46		

SAGINAW STANDARD STEERING COLUMN

GENERAL INFORMATION

The Saginaw Standard steering column installed in vehicles equipped with automatic transmission and power steering is of the same impact absorbing design as Chrysler built columns. Similar in appearance to Chrysler built steering columns, it can be quickly identified by an access hole in the underside of the shift bowl for the shift tube lock screw.

Service procedures differ from other steering columns, but the same precautions against hammering, sharp blows or jars must be observed.

SERVICE PROCEDURES

When the column is installed in a car, it is no more susceptible to damage through ordinary usage than previous columns; however, when it is removed, special care must be taken in handling this assembly. When the column is removed from the car such actions as a sharp blow on the end of the steering shaft or shift levers, leaning on the column assembly, or dropping of the assembly could shear or loosen the plactic shear joints that maintain column rigidity. It is, therefore, suggested that the removal and installation, and the disassembly and reassembly procedures be carefully followed when servicing this assembly.

IMPORTANT: Bumping, jolting and hammering of the steering shaft and gearshift tube must be avoided during all servicing operations. If the shear pins are broken, the controlled rate of the impact-absorbing features will be destroyed making these parts unfit for further use. The "special tools" required and their usage are covered in the following service procedures.

Removal (Fig. 1)

(1) Disconnect battery ground cable.

(2) Disconnect shift linkage rod from lever at lower end of steering column.

(3) Remove steering shaft lower coupling to wormshaft roll pin.

(4) Disconnect turn signal wire connector at steering column jacket.

(5) Remove horn ring ornament assembly by turning counterclockwise.

(6) Disconnect wire at horn switch. Remove three screws attaching horn ring and switch to steering wheel, then remove horn ring and switch.

(7) Remove steering wheel retaining nut and washer. Remove steering wheel with Tool C-3428B. **Do not bump or hammer on steering shaft to remove wheel.** Lift spring and horn contact plate off of steering shaft. Remove turn signal lever.

(8) Remove floor plate to floor pan attaching screws. Remove finish plate from under instrument panel to expose steering column bracket.

(9) Disconnect gearshift pointer (Fig. 2) before lowering steering column from instrument panel.

(10) Remove one bolt and the nuts attaching steering column bracket to instrument panel support.

(11) Carefully pry lower coupling from steering gear wormshaft and remove column assembly out through passenger compartment being careful not to damage paint or trim.

Disassembly

(1) Remove four bolts attaching bracket assembly to column jacket.

(2) Lift off two turn signal wire troughs and attach Column Holding Fixture C-4048 to column jacket and clamp assembly in a vise.

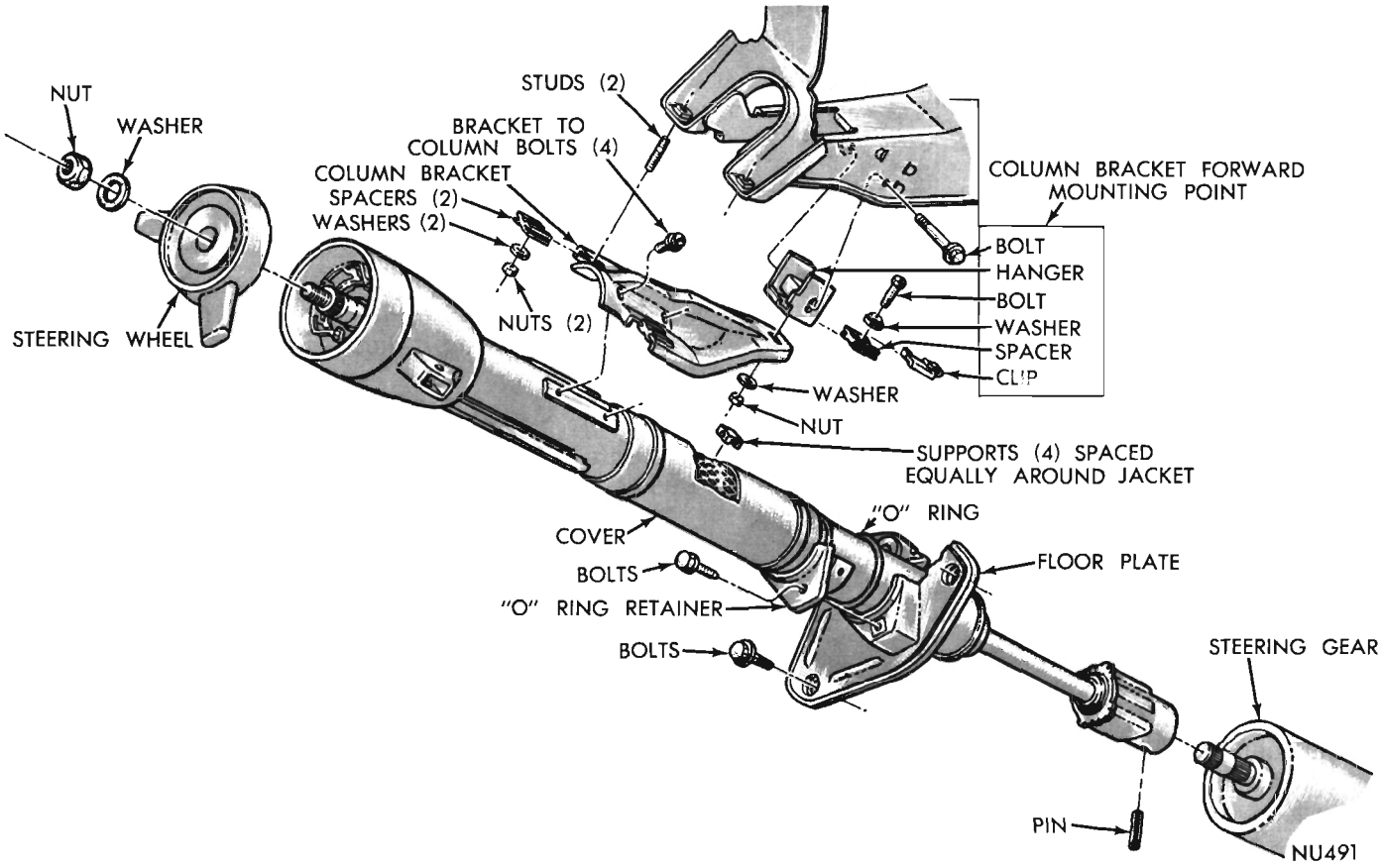

Fig. 1—Steering Column—Mounting

(3) Carefully pry upward on one end of gearshift indicator operating lever to remove from shift tube (Fig. 2).

(4) Drive out gearshift lever pivot pin and remove shift lever only if necessary to repair lever, bowl or shift lever spring.

(5) Remove turn signal wire terminals from connector by lightly pulling on each wire while inserting a small thin bladed screwdriver above and below the terminal to release the tangs (Fig. 3).

(6) Remove snap ring, flat washer and wave washer from upper end of steering shaft (Fig. 4).

CAUTION: Do not allow steering shaft to slide out of column and strike the floor when snap ring is removed.

(7) Remove spring clip retaining lower support and bearing in lower end of column jacket (Fig. 5) and slide support assembly out of jacket with steering shaft.

(8) Loosen 3 turn signal switch retaining screws approximately 7 turns (Fig. 4) or until turn signal

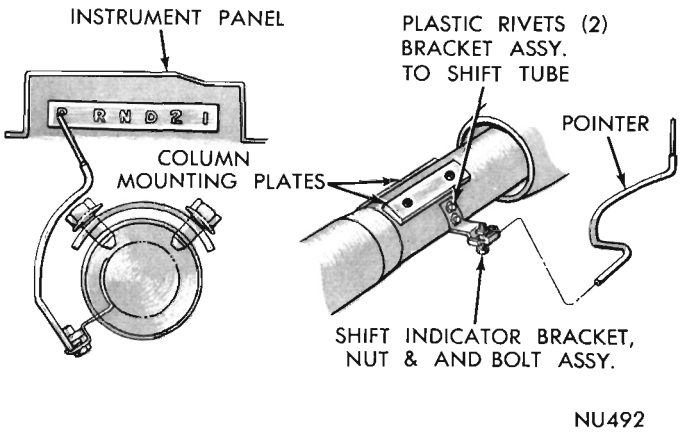

Fig. 2—Gearshift Indicator Mounting

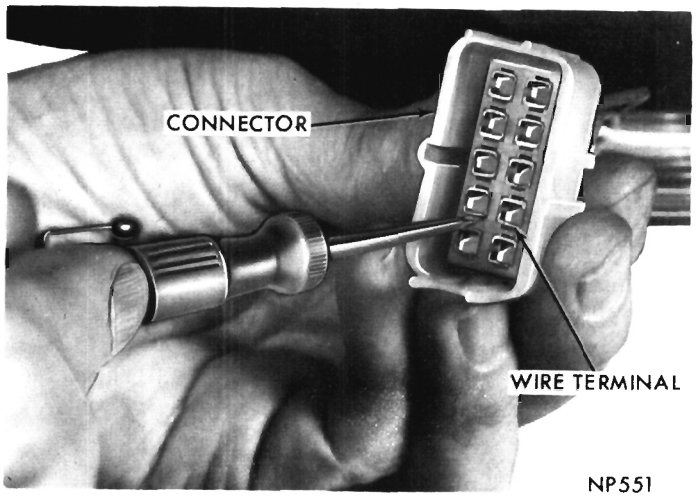

Fig. 3—Removing Wires from Connector

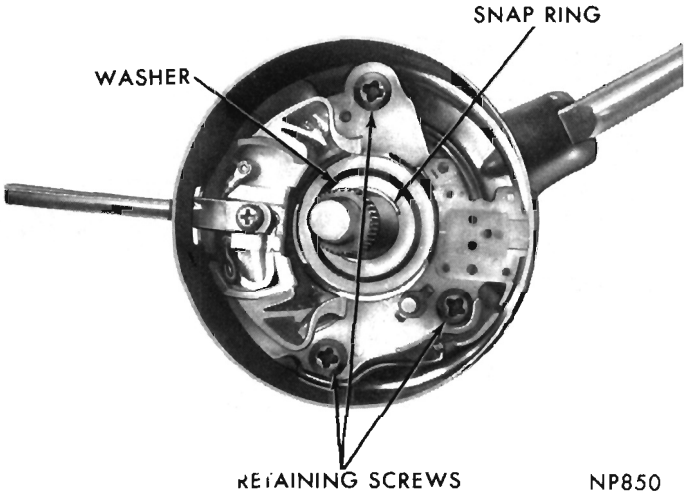

Fig. 4—Steering Column (Upper End)

cover assembly can be rotated counterclockwise and lifted off top of column jacket (Fig. 6).

(9) Through hole in shift bowl, remove shift tube lock screw. Slide shift tube out lower end of jacket and remove bowl from upper end (Fig. 7).

(10) Remove shift bowl lower bearing from upper end of column jacket (Fig. 8).

(11) With turn signal cover resting on a flat surface, (lock plate down) remove 3 retaining screws and separate turn signal switch, bearing assembly and cover from lock plate. **Do not lose springs.** (Fig. 9).

Inspection

After cleaning, inspect all parts for wear or damage. Note condition of shift lever gate and inner end of shift lever. Inspect turn signal switch for distortion, broken or damaged parts. Inspect wiring insulation for worn or bare spots.

Inspect steering shaft bearing for smooth operation, and lubricate with Multi-Purpose Chassis Lubricant or similar lubricant. If bearing has any signs of roughness or wear, it should be replaced.

Assembly

Apply a thin coating of Automobile Multi-Purpose Grease NLGI Grade 2 E.P. or Multi-Mileage Lubricant, Part Number 2525035 to all friction surfaces.

(1) Install shift bowl lower bearing in upper end of column jacket (Fig. 8).

(2) Place shift bowl on column jacket. Slide shift tube up column aligning key with slot in shift bowl. With tube bottomed in bowl install lock screw (Fig. 7).

(3) Insert turn signal switch wires through turn signal switch cover. Place bearing assembly under switch and position both assemblies in cover, matching screw holes in all three units. Insert 3 screws in the respective holes and while holding in a horizontal

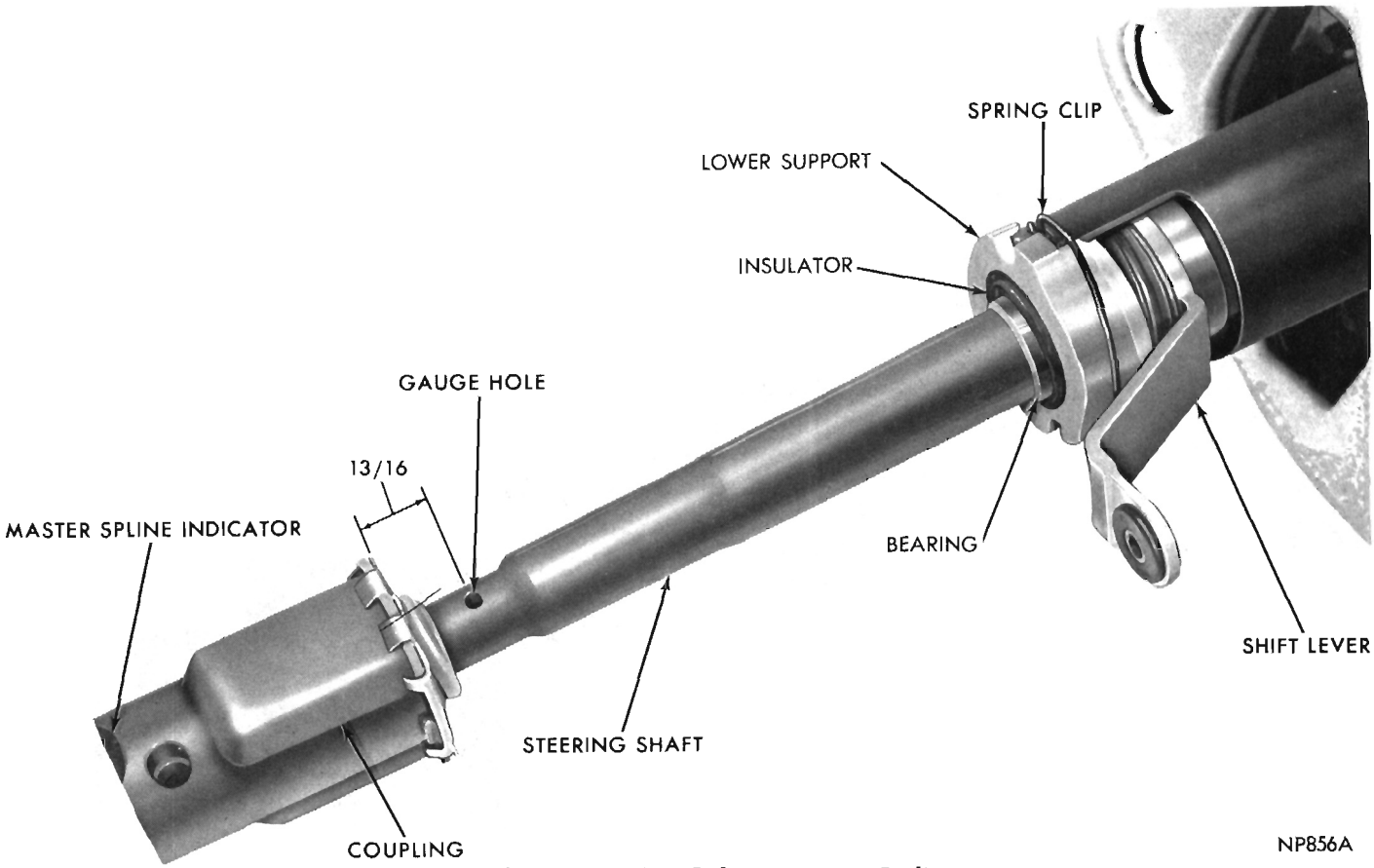

Fig. 5—Steering Column (Lower End)

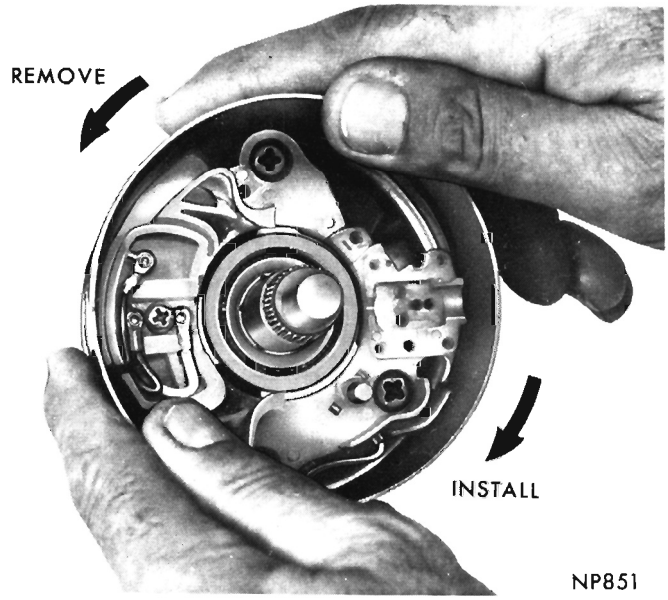

Fig. 6—Removing or Installing Turn Signal Cover Assembly

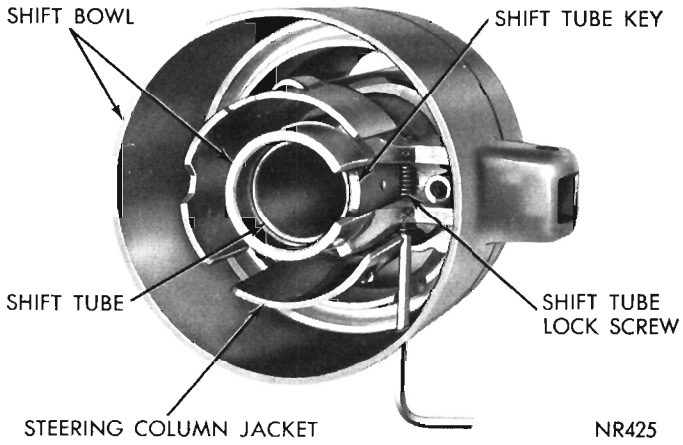

Fig. 7—Removing or Installing Shift Tube Lock Screw

plane, place 3 springs on ends of screws (Fig. 9).

(4) Carefully match 3 holes in lock plate with 3 screws protruding from bottom of cover. **Lock plate stop must face away from cover.** Start each screw just

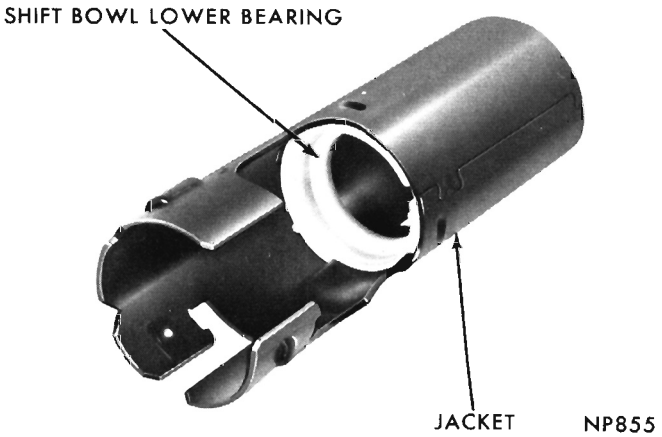

Fig. 8—Shift Bowl Lower Bearing

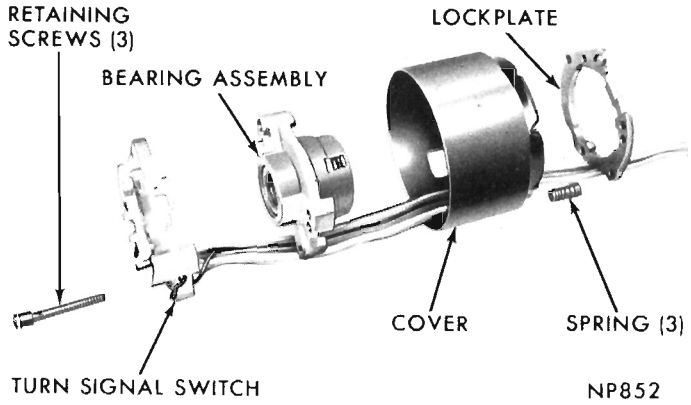

Fig. 9—Turn Signal Cover—Disassembled

one or two turns (Fig. 10).

(5) Feed turn signal wires through shift bowl.

(6) Place cover assembly on column by aligning tangs on lock plate with slots in jacket.

(7) Press down on assembly and rotate fully clockwise (Fig. 6). Tighten 3 retaining screws 30 to 40 inch-pounds.

(8) Bend turn signal wire terminal tangs outward slightly (Fig. 11).

(9) Install wire terminals in proper locations in insulator (Fig. 12).

(10) Slide lower support and bearing in steering column lower end (Fig. 5).

(11) Install spring clip retaining lower support and bearing making sure tabs of clip are securely engaged in slots of jacket and support.

(12) Slide steering shaft into column jacket from lower end and with a helper holding shaft, install wave washer, plain washer and snap ring (Fig. 4). **Be sure snap ring is fully seated in groove.**

(13) Install gearshift lever and pivot pin.

(14) With gearshift lever in neutral position, attach indicator operating bracket to shift tube with two new plastic rivets (Fig. 2).

(15) Remove column from vise and Holding Fixture

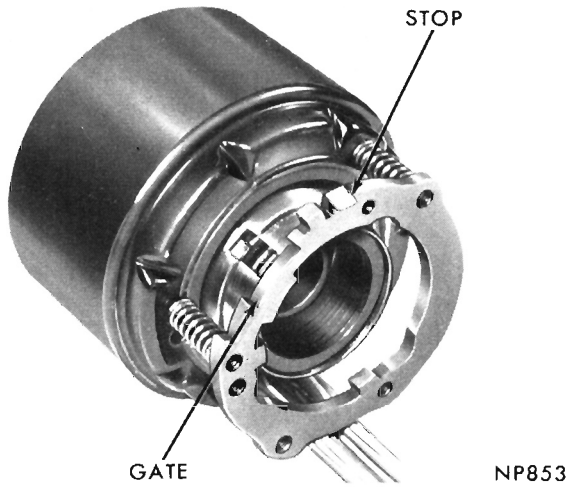

Fig. 10—Turn Signal Cover—Assembled

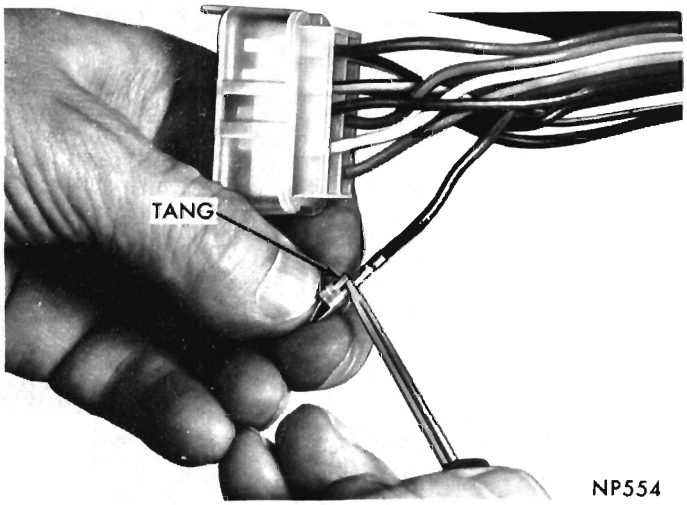

Fig. 11—Spreading Tang on Wire Terminal

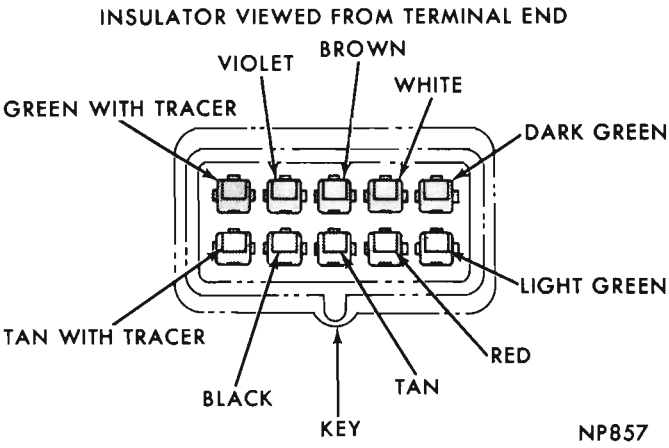

Fig. 12—Turn Signal Color Code

from column. Snap 2 turn signal wire troughs into place. Position bracket assembly on steering column (Fig. 1). Install and torque the four short retaining screws to 95 inch-pounds.

Column Installation (Fig. 1)

(1) Insert column assembly through floor pan opening, being careful not to damage paint or trim.

(2) With front wheels in straight ahead position and master splines on wormshaft and coupling aligned, engage coupling with wormshaft and install new roll pin.

(3) Hold column assembly with bracket against the instrument panel support. Install but **do not tighten** the two upper bracket nuts.

(4) **Center steering shaft coupling at midpoint of its travel.** This is accomplished by moving column and bracket assembly fore and aft in the instrument panel support so dimension between top of coupling and center of gauge hole is 13/16 inch (Fig. 5). Tighten the two upper bracket nuts to 140 inch-pounds.

(5) Position floor plate over floor pan opening, centering it around the column, then install and tighten retaining bolts. Slide "O" ring down the jacket and into recess in floor plate, position retaining plate over "O" ring and secure with the two bolts. **Do not pry to align plates and attaching bolts or column misalignment will occur.**

(6) Loosen bolt attaching the forward adjustable hanger to the instrument panel support. Attach column bracket forward leg to the hanger and tighten to 140 inch-pounds. **Then tighten the hanger to instrument panel support bolt to 200 inch-pounds.**

(7) Connect gearshift indicator pointer (Fig. 2) to operating bracket on shift tube in its approximate original location. Slowly move gearshift lever from "1" (low) to "P" (park) pausing briefly at each selector position. The indicator pointer must align with each selector position. If necessary, loosen the bolt and readjust to align pointer correctly.

(8) Attach finish plate to bottom of instrument panel.

(9) Install turn signal lever and position horn contact and spring on steering shaft.

(10) Place steering wheel on steering shaft with master splines aligned. Install retaining nut and washer, tighten nut to 27 foot-pounds. **Do not drive wheel on shaft, draw wheel down with retaining nut.**

(11) Install horn switch parts previously removed from steering wheel. Connect horn switch wire. Install horn ring ornament and lock by turning clockwise.

(12) Connect wiring connectors at steering column jacket. Connect battery ground cable, test operation of lights and horns.

(13) Connect and adjust gearshift linkage, refer to "Transmission Group."

STEERING COLUMN (TILT-WHEEL)

INDEX

	Page		Page
Assembly	51	Installation	54
Disassembly	49	Removal	49
Inspection	51		

GENERAL INFORMATION

This optional steering column has the same impact absorbing design as the other columns described in this section. The installation (Fig. 1) is the same, therefore only the disassembly and reassembly of the column will be detailed here.

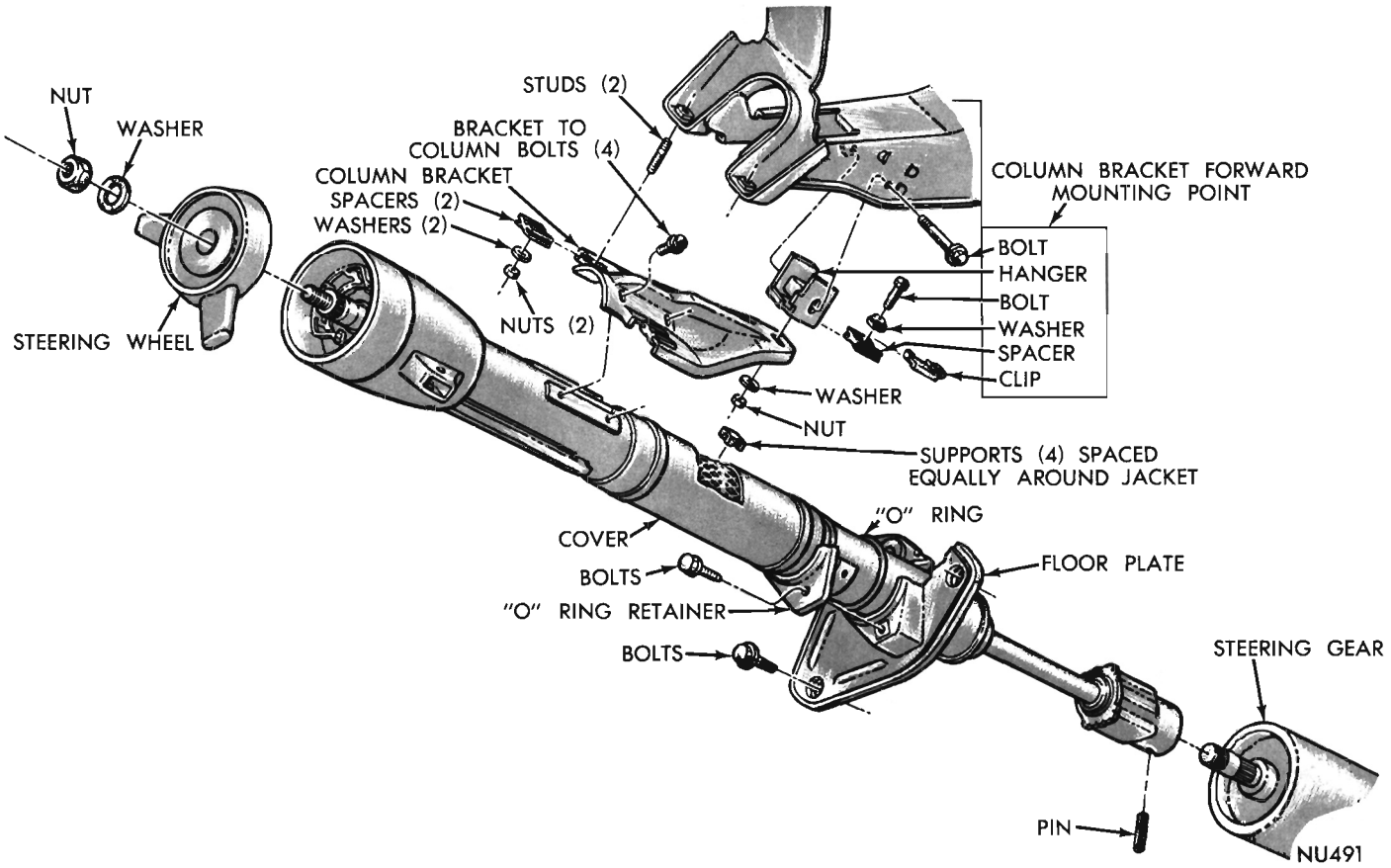

Fig. 1—Steering Column Mounting

SERVICE PROCEDURES

REMOVAL (See Previous Columns)

Disassembly

(1) Remove four bolts attaching bracket assembly to column jacket (Fig. 1).

(2) Unsnap and remove the two wiring troughs from column jacket. Remove wiring from between the two mounting pads. Attach column Holding Fixture C-4048 to jacket pads and clamp the assembly in a vise (Fig. 2).

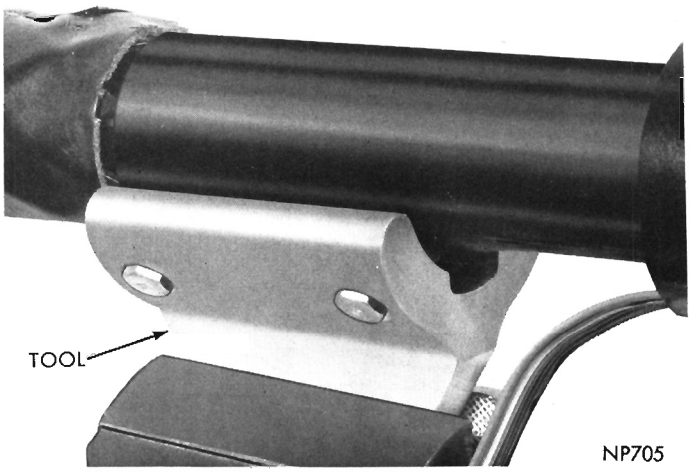

Fig. 2—Column Holding Fixture

(3) While pulling slightly on wire (Fig. 3) insert a small screwdriver (with thin blade) above and below terminal to release tangs, then pull wire from connector. Remove all wires in same manner.

(4) Carefully pry upward on one end of gearshift indicator bracket to remove it from gearshift tube (Fig. 4).

(5) Drive out gearshift lever pivot pin, then remove lever from housing. Remove tilt release lever and turn signal switch lever.

(6) Position actuator cover remover Tool C-4100 then assemble Slide Hammer and bolt, Tool C-4041 to remover (Fig. 5). Bump outward on slide hammer to remove cover.

(7) Remove three attaching screws (Fig. 6) and remove turn signal switch and wiring.

(8) Remove steering shaft bearing locknut with Tool C-4099 then remove bearing seat and race (Fig. 7).

(9) Install tilt lever in actuator and tilt to maximum "up" position to relieve spring tension. Remove tilt spring retainer using a screw driver (Fig. 8). Press in on retainer, turn clockwise until ears align with

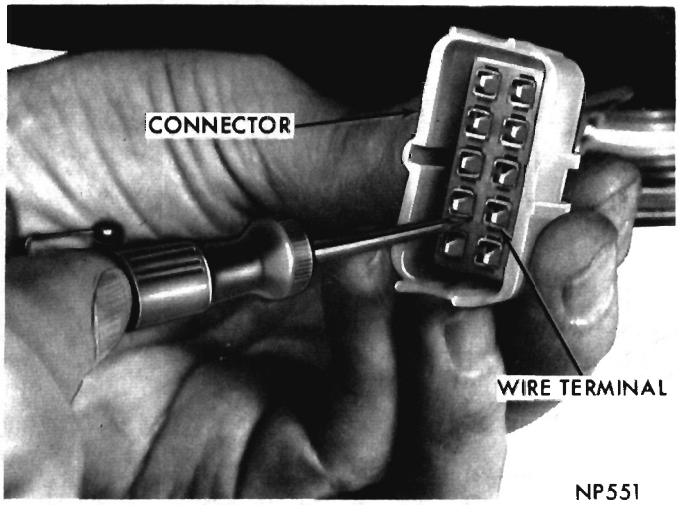

Fig. 3—Removing Wires from Connector

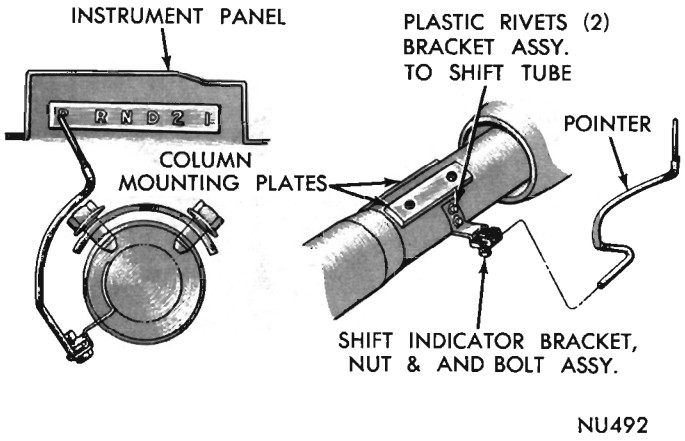

Fig. 4—Shift Indicator Mounting

grooves in housing. Then remove retainer and spring.

(10) Disassemble lower coupling assembly (Fig. 9). Press shoe pin out of steering shaft with an arbor press. **Do not hammer on coupling or steering shaft to remove.**

(11) Place Pivot Pin Remover C-4016 over pivot pin and thread small portion of screw firmly into the pin (Fig. 10). Hold screw from turning with one wrench, turn nut clockwise with a second wrench to withdraw pivot pin from the support.

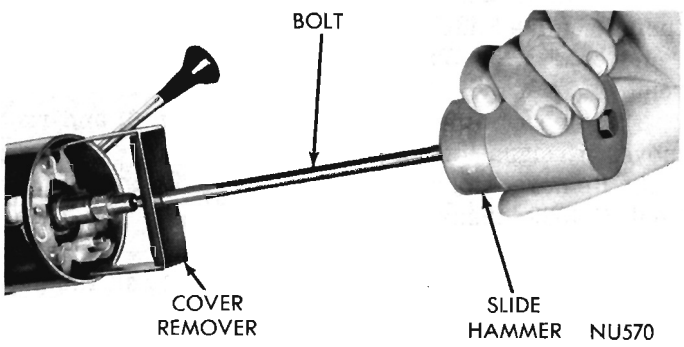

Fig. 5—Removing Tilt Actuator Cover

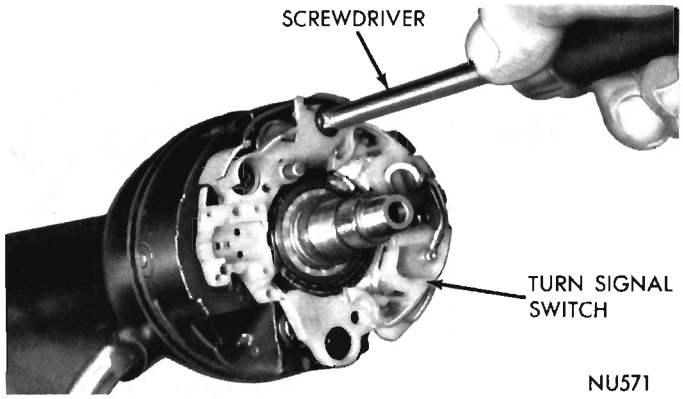

Fig. 6—Removing or Installing Turn Signal Switch



Fig. 7—Removing or Installing Steering Shaft Bearing Locknut

(12) Remove opposite pivot pin in same manner.

(13) Lift tilt lever to disengage lock shoes from pins and remove actuator housing assembly from upper yoke. Remove upper and lower bearing cages from actuator housing.

(14) Remove steering shaft assembly from upper end of column.

(15) Remove four bolts securing support to lock plate and remove support from end of column jacket (Fig. 11). If necessary, remove two attaching screws and shift gate from the support.

(16) Carefully remove retainer ring from upper end

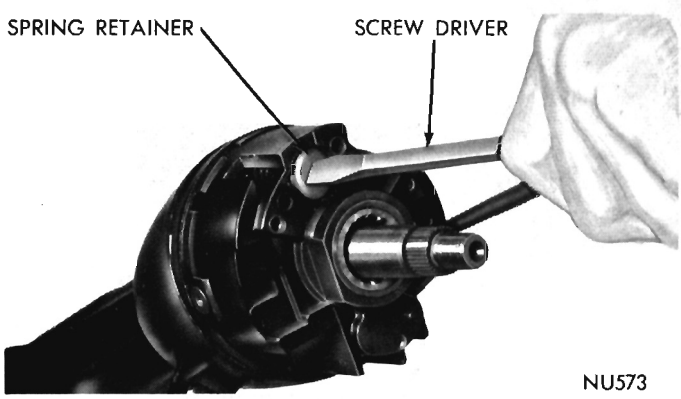

Fig. 8—Removing or Installing Tilt Spring

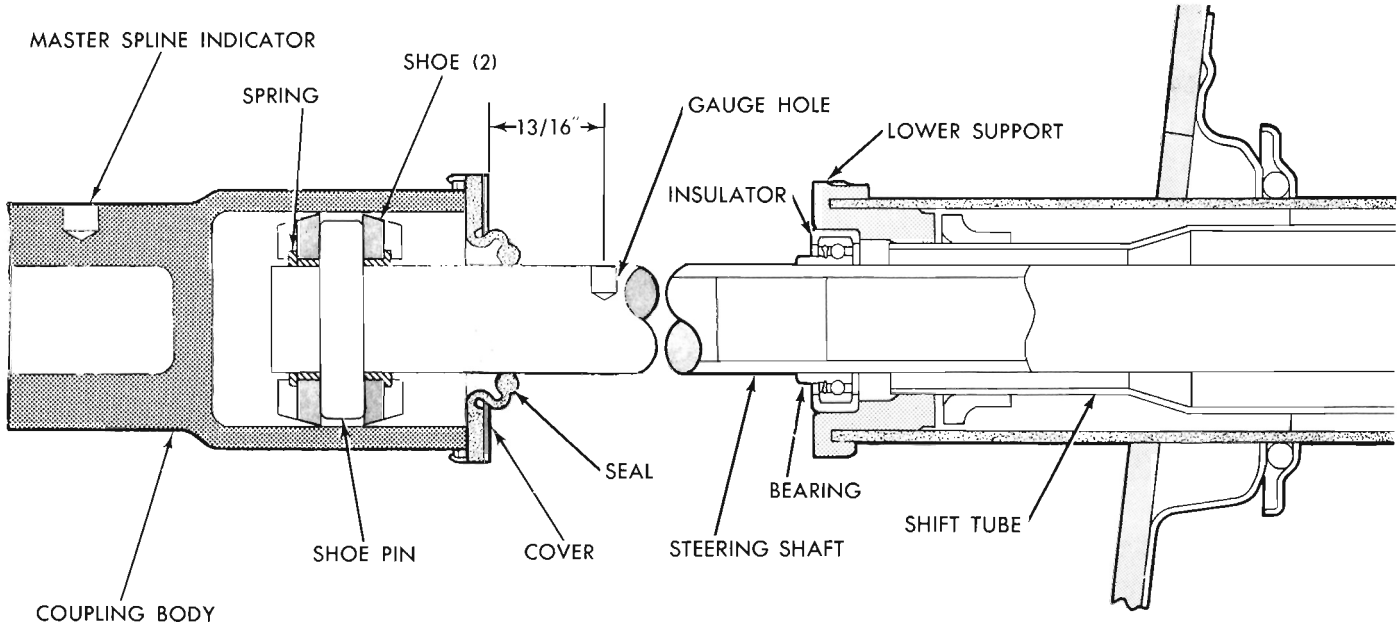

Fig. 9—Steering Column—Lower End

of shift tube (Fig. 12). Remove thrust washer.

(17) Remove lower support and bearing (Fig. 9) from column jacket. Depress one plastic finger at a time while tapping the support off the jacket.

(18) Insert Tool C-4045 down into gearshift tube, guiding the hook through slot in tube and behind hub of shift lever bowl (Fig. 13). While holding screw portion of tool, turn the nut clockwise to press shift tube out of bowl. **Make sure lower shift lever is aligned with "T" slot in jacket, and do not hammer on shift tube to remove.**

(19) If necessary, remove lock plate and wave washer from bowl, then remove bowl from the jacket.

(20) Drive lock shoe pin (Fig. 14) flush with housing face for release lever pin clearance. Drive out release lever pin **from inside actuator housing,** remove lever and spring.

(21) Drive out lock shoe pin, then remove lock shoes and springs. **NOTE: With tilt lever opening on left side, shoes facing up, the four slot shoe is on the left.**

(22) Position upper yoke so it is at a 90 degree angle to center line of lower shaft. Remove upper yoke with spherical bearing and remove spherical bearing from upper yoke (Fig. 15).

Inspection

(1) Inspect all bearings and race seats for brinelling, nicks, scratches and wear.

(2) Inspect centering sphere for nicks, damage or wear. If damage is found, check shaft couplings for nicks, burrs or rough spots.

(3) Inspect actuator housing, shift lever bowl and support for cracks or other damage.

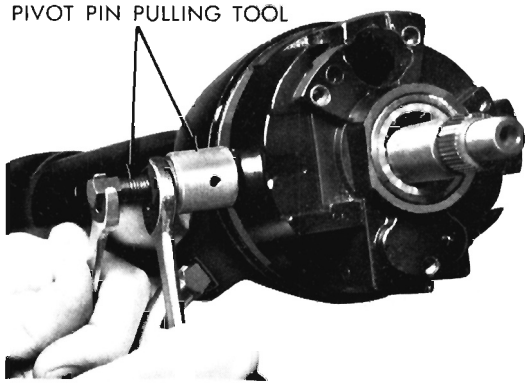

Fig. 10—Removing Tilt Actuator Pivot Pins

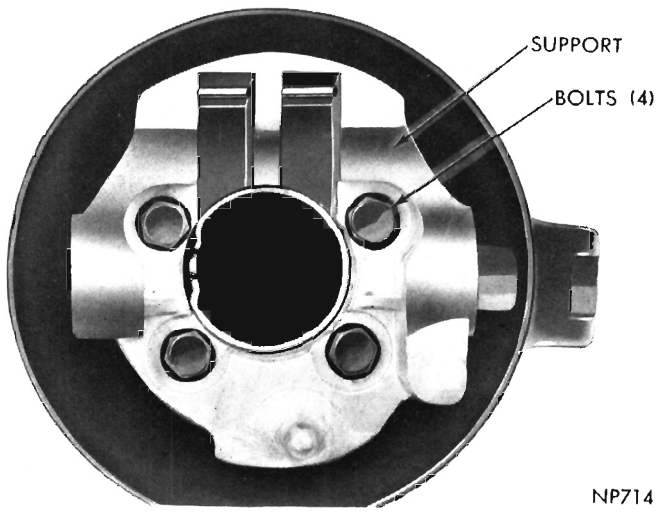

Fig. 11—Tilt Actuator Support and Bolts

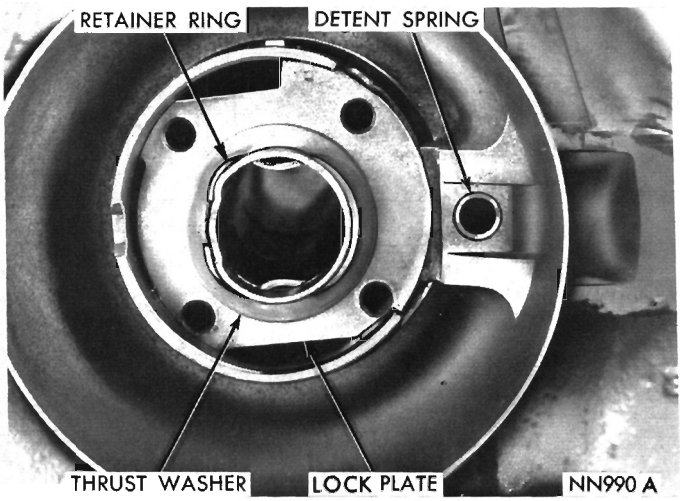

Fig. 12—Shift Tube Retainer and Thrust Washer

(4) Inspect turn signal switch unit for distortion, broken or damaged parts.

(5) Inspect horn and turn signal wires for worn or bare spots.

(6) Inspect the steering shaft and gearshift tube for loose or broken plastic shear joints.

(7) Inspect steering column mesh cover, mend with electricians tape if loose or torn.

Assembly

The grease recommended for use during reassembly procedures is Automotive Multi-Purpose Grease NLGI Grade 2 E.P. or Multi-Mileage Lubricant, Part Number 2525035.

The floor plate assembly must be installed before installing shift tube and lever, since this cannot be done after shift tube and lever are in place in steering column.

(1) If removed, place gearshift bowl on column jacket, then install wave washer and lock plate.

(2) Install shift tube in lower end of jacket, align keyway in tube with key in bowl.

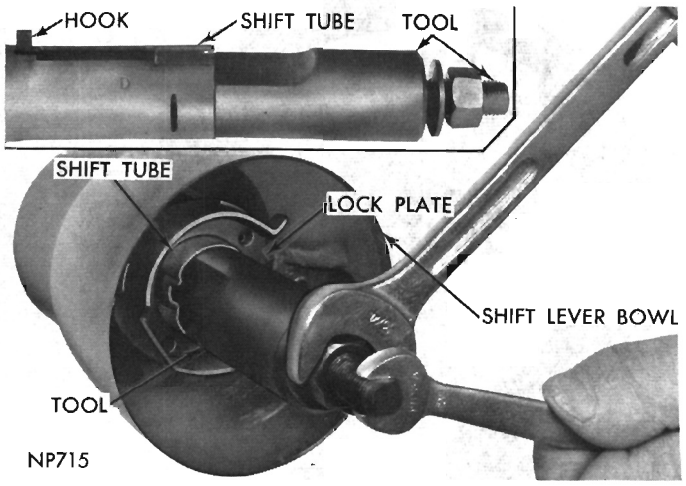

Fig. 13—Removing Gearshift Tube

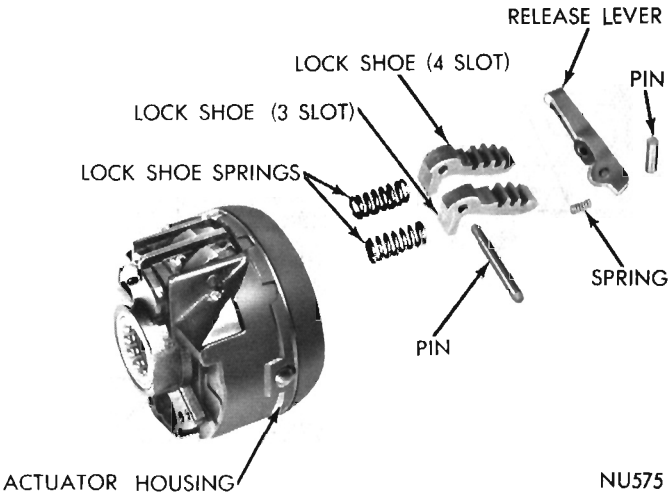

Fig. 14—Lock Shoes and Release Lever—Disassembled

(3) Push shift tube into bowl with hand pressure. Insert lower end of main screw, Tool C-4046 through lock plate and down below the "flat" in gearshift tube (Fig. 16). Rotate main screw about 1/2 turn so "flat" on main screw is not aligned with "flat" in the tube. While holding screw portion of tool, turn the nut clockwise to draw shift tube through the wave washer and lock plate. **Do not hammer on shift tube to install.**

(4) Remove the shift tube installing tool and install thrust washer and retainer ring (Fig. 12).

(5) If removed, install shift gate on support with two screws. Position support on lock plate in shift lever bowl, install four retaining bolts and tighten to 50 inch-pounds (Fig. 11).

(6) If removed, align plastic fingers on steering shaft lower bearing support with holes in column jacket, then push assembly in the jacket. Lower end of shift tube pilots in the support (Fig. 9).

(7) Lubricate and install centering spheres in upper yoke. Rotate centering sphere so flats are lined up with

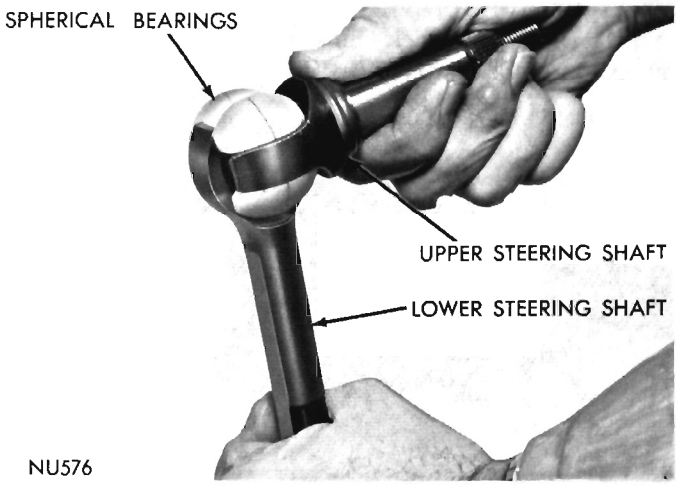

Fig. 15—Assembling or Disassembling Spherical Joint

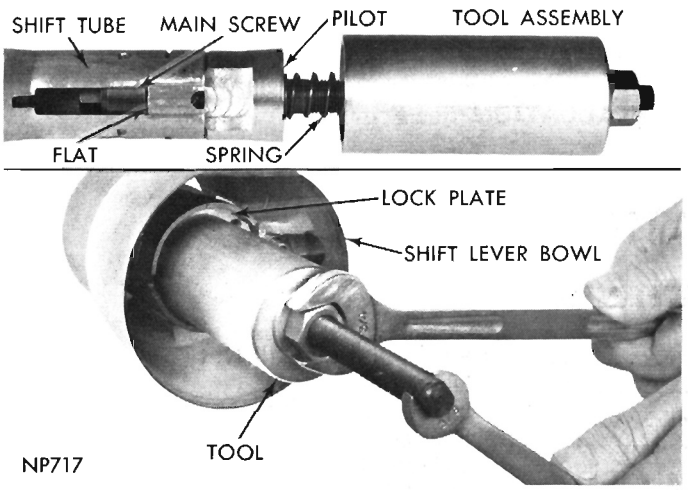

Fig. 16—Installing Gearshift Tube

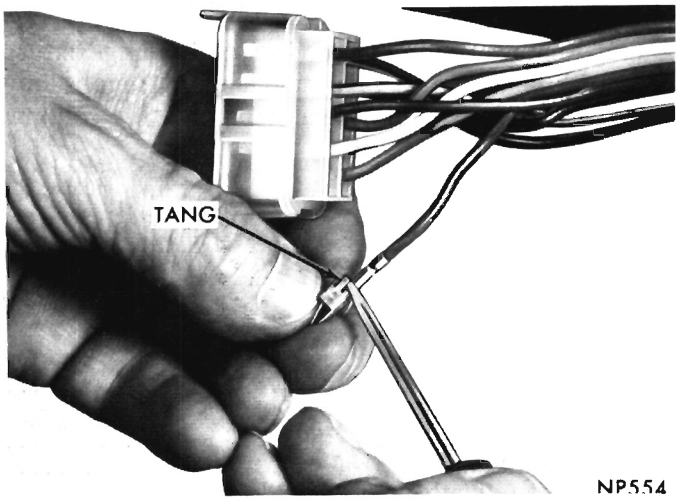

Fig. 18—Spreading Tang on Wire Terminal

lower shaft coupling, then with shaft at a 90 degree angle, install upper shaft and sphere into lower shaft (Fig. 15).

(8) Install steering shaft assembly in shift tube from upper end. Carefully guide shaft through shift tube, lower seal and bearing.

(9) Install lock shoe springs, lock shoes and shoe pin in actuator housing (Fig. 14). Use "C" clamp to press shoes into position for pin installation. Install spring, release lever and pin.

(10) Lubricate and install lower bearing race in actuator housing. Install external tilt release lever. With lock shoes held disengaged with lever, position housing over steering shaft, align and install pivot pins. Tap pins in with a plastic hammer until they are flush with surface of housing.

(11) Install tilt spring, spring seat and retainer (Fig. 8). Make sure spring seat is in place over pilot stud.

(12) Thread horn and turn signal wires through actuator housing and gearshift bowl. Position switch assembly on end of housing, install and tighten three retaining screws to 35 inch-pounds (Fig. 6).

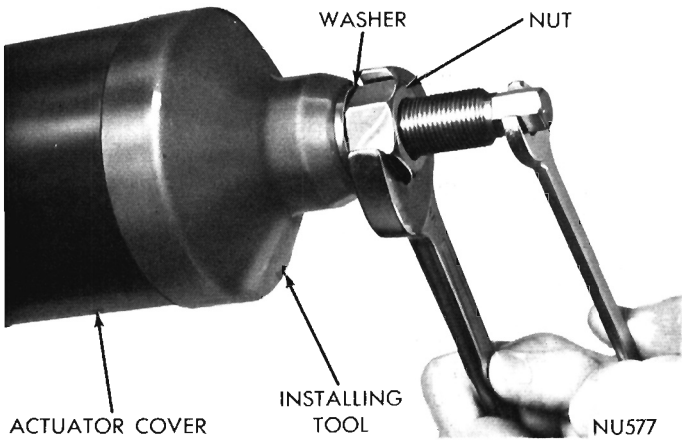

Fig. 17—Installing Actuator Cover

(13) Lubricate and install upper bearing race and inner race seat in actuator housing, make sure they seat in housing.

(14) Install steering shaft bearing locknut with Tool C-4099. **Tighten only enough to remove end play (Fig. 7).**

(15) Position actuator cover so that key in cover aligns with keyway in actuator housing.

(16) Place cover installing Tool C-4098 over shaft and on cover (Fig. 17).

(17) Install threaded part of tool on steering shaft and turn large nut to press cover into position and remove tool.

(18) Lubricate and assemble steering shaft lower coupling (Fig. 9). Make sure shoe pin is exactly centered in the steering shaft.

(19) Insert gearshift lever in gearshift bowl and install lever pivot pin.

(20) With gearshift lever in neutral position, attach indicator operating bracket to shift tube with two new plastic rivets.

(21) Bend turn signal wiring terminal tangs outward slightly (Fig. 18). Then install wires in their prop-

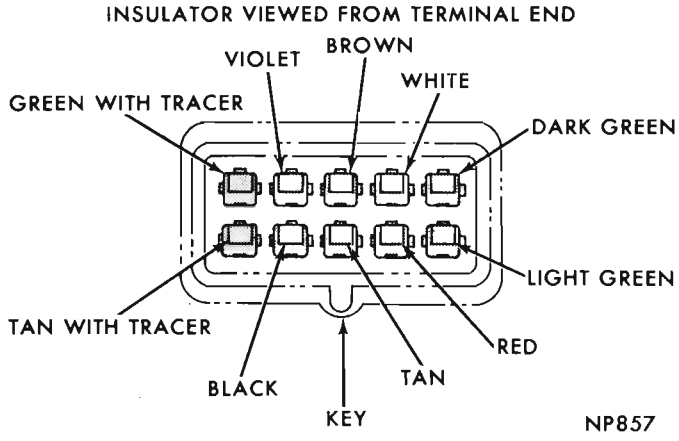

Fig. 19—Turn Signal Connector Color Code

er location in the connector (Fig. 19).

(22) Remove column from vise and Holding Fixture from column. Snap 2 turn signal wire troughs into place. Position bracket assembly on steering column. Install and torque the four short retaining screws to 95 inch-pounds.

INSTALLATION (See Previous Columns)

SPECIFICATIONS

MANUAL STEERING

Type	Recirculating Ball Nut
Ratio	24 to 1
Cross Shaft Bearings	3-Needle Bearings
Valiant 6 cyl.	Bronze Bushings
Worm Shaft Bearings	2-Caged Ball Bearings
Cross Shaft Adjusting Screw End Play	.000-.004 Inch
Worm Bearing Pre-Load	1 to 4 in. lbs. to keep Wheel Moving
Sector Mesh Adjustment Pre-Load Torque— Includes worm bearing Pre-Load	8 to 11 in. lbs. Pull through high spot

POWER STEERING GEAR

Type	Constant Control Full Time Power
Ratio	15.7 to 1
Wheel Turns—Stop to Stop	3-1/2
Cross Shaft Bearings	2 Needle Bearings and 1 Direct Bearing on Gray Iron Cover
Worm Shaft Thrust Bearing Pre-Load	16-24 Ozs.
Cross Shaft Adjustment	Tighten Adjusting Screw 3/8 to 1/2 turn past Zero Back Lash (Center of High Spot)
Fluid Capacity of Hydraulic System	4 Pts. 3-3/4 Imperial Pts.)
Type of Fluid	Power Steering Fluid Part No. 2084329 or equivalent

PUMPS

Type	Constant Displacement—.94 Cu. In. per revolution Constant Displacement—1.06 Cu. In. per revolution
Maximum Pressure	
Valiant Barracuda (all engines)	
.94 pump	750 to 850 PSI
1.06 pump	750 to 850 PSI
Satellite	
.94 or 1.06 pump (318, 383 or 440 C.I.D. engine)	950 to 1050 PSI
1.06 pump (225 C.I.D. engine)	750 to 850 PSI
1.06 pump (426 C.I.D. Hemi engine)	950 to 1050 PSI
Fury (all engines)	
.94 or 1.06	950 to 1050 PSI
Pump Output	
.94 pump	2.1 to 2.6 gpm
1.06 pump	
High level	2.5 to 3.0 gpm
Low level	1.4 to 1.8 gpm
Type of Fluid	Power Steering Fluid—Part No. 2084329 or equivalent—Do Not use Type "A" Transmission Fluid

TIGHTENING REFERENCE

MANUAL STEERING

	Foot Pounds	Inch
Cross Shaft Adjusting Screw Lock Nut	35	
Cross Shaft Cover Bolt	25	
Gear Assembly to Frame Bolt	100	
Steering Arm Nut	175	
Steering Wheel Nut	27	

POWER STEERING

	Foot Pounds	Inch
Gear Housing to Frame Bolt		
Valiant and Satellite	100	
Fury Models	100	
Gear Shaft Adjusting Screw Lock Nut	50	
Gear Shaft Cover Nut	20	
High Pressure Hose Fitting	30	
Steering Arm Nut	175	
Steering Column Support Nut		140
Steering Shaft Coupling Bolts		200
Valve Body Attaching Bolts		200
Valve Body End Plug	25	
Steering Wheel Nut	27	

PUMPS

Location	Foot-Pounds
High Pressure Hose Fitting	
Gear End	
All Models	12-14
Pump End	
All Models	21-27
Bracket Bolts	
.94 pump	30-40
1.06 pump	18
Flow Control Valve Plug	
.94 pump	4
1.06 pump	7
Pulley Retaining Nut (.94 pump)	45-55
Bracket Mounting Bolts	25-35
1.06 pump	
1/8 inch pipe clean out plug	7

TRANSMISSIONS

CONTENTS

	Page		Page
MANUAL TRANSMISSIONS—3 SPEED	1	SPECIFICATIONS	95
MANUAL TRANSMISSION—4 SPEED	15	TORQUEFLITE TRANSMISSIONS	30

MANUAL TRANSMISSIONS—3 SPEED (A-903 and A-745)

INDEX

	Page		Page
Cleaning and Inspection	11	Service Out of Vehicle	6
General Information	1	Assembling Transmission	13
Service Diagnosis	1	Disassembling Transmission	8
Service In Vehicle	2	Transmission Installation	15
Extension Housing and Bushing	5	Transmission Removal	6
Extension Housing Yoke Seal	6	Specifications	95
Gearshift Linkage Adjustment	2	Tightening Reference	98
Speedometer Pinion Gear	5		

GENERAL INFORMATION

The three speed manual transmission used on 6-cylinder vehicles is referred to as Model A-903 (Fig. 1), and the three speed heavy duty manual transmission used on 8-cylinder vehicles is referred to as Model A-745 (Fig. 2). The Model A-745 is also used on 6-cylinder Models for Taxi and Police car operations.

A pad has been provided (Fig. 3) on right side of transmission for identification numbers.

SAMPLE NUMBER: PP 745 1861 0250.

First two letters indicate manufacturing plant; next three numbers indicate transmission model; next four numbers are a date code followed by serial numbers.

The service procedures and illustrations for the two transmissions are combined in this manual. Where variations in procedures occur, the differences will be identified as A-903 or A-745. When replacement of parts is required, always refer to the Parts Catalog to make sure the correct part is being installed.

The three speed manual transmissions are of the synchromesh type with helical cut gears to provide silent operation. The countershaft gear is in constant mesh and is supported by roller bearings at each end.

The mainshaft front end is piloted in roller bearings in the end of the main drive pinion, and is supported by a ball bearing in the rear of the case. The rear end of the mainshaft is supported by the sliding yoke and bushing in the extension housing. The speedometer drive gear is integral with the mainshaft.

SERVICE DIAGNOSIS

Condition	Possible Cause	Correction
HARD SHIFTING	(a) Incorrect clutch adjustment	(a) Refer to Clutch Group for corrections.
	(b) Improper cross-over adjustment.	(b) Perform cross-over adjustment as outlined in "Gearshift Linkage Adjustments."
	(c) Synchronizer clutch sleeve damaged.	(c-d-e) Causes noted can only be corrected by disassembling transmission and replacing damaged or worn parts.
	(d) Synchronizer spring improperly installed.	
	(e) Broken or worn synchronizer stop rings.	
TRANSMISSION SLIPS OUT OF GEAR	(a) Linkage interference.	(a) Inspect and remove all linkage interferences.
	(b) Gearshift rods out of adjustment.	(b) Adjust gearshift rods as outlined in "Gearshift Linkage Adjustments."
	(c) Second or direct speed gear synchronizer clutch teeth worn.	(c) Disassemble transmission and replace parts as necessary.
	(d) Clutch housing bore or face out of alignment.	(d) Refer to Clutch Group for correction procedures.

Condition	Possible Cause	Correction
TRANSMISSION NOISES	(a) Excessive end play in countershaft gear.	(a) Replace thrust washers.
	(b) Loose synchronizer hub spline fit on mainshaft.	(b) Inspect mainshaft and synchronizer hub and replace parts as necessary.
	(c) Loose spline fit on low speed sliding gear to mainshaft spline.	(c) Inspect low speed sliding gear and mainshaft. Replace parts as necessary.
	(d) Damaged, broken or excessively worn gear teeth.	(d) Replace worn gears.
	(e) Drive pinion bearing worn.	(e) Replace worn bearing.

SERVICE PROCEDURES

SERVICE IN VEHICLE

GEARSHIFT LINKAGE ADJUSTMENT

Valiant or Barracuda (Fig. 4)

(1) Remove both shift rod swivels from transmission shift levers.

(2) Make sure transmission shift levers are in neutral (middle detent) position.

(3) Adjust 2nd-3rd rod swivel so it will enter 2nd-3rd lever at transmission while the hand lever on steering column is held 10° above horizontal position. Install washers and clip. Tighten swivel nut to 70 inch-pounds.

(4) Place screwdriver or suitable tool between cross-over blade and 2nd-3rd lever at steering column

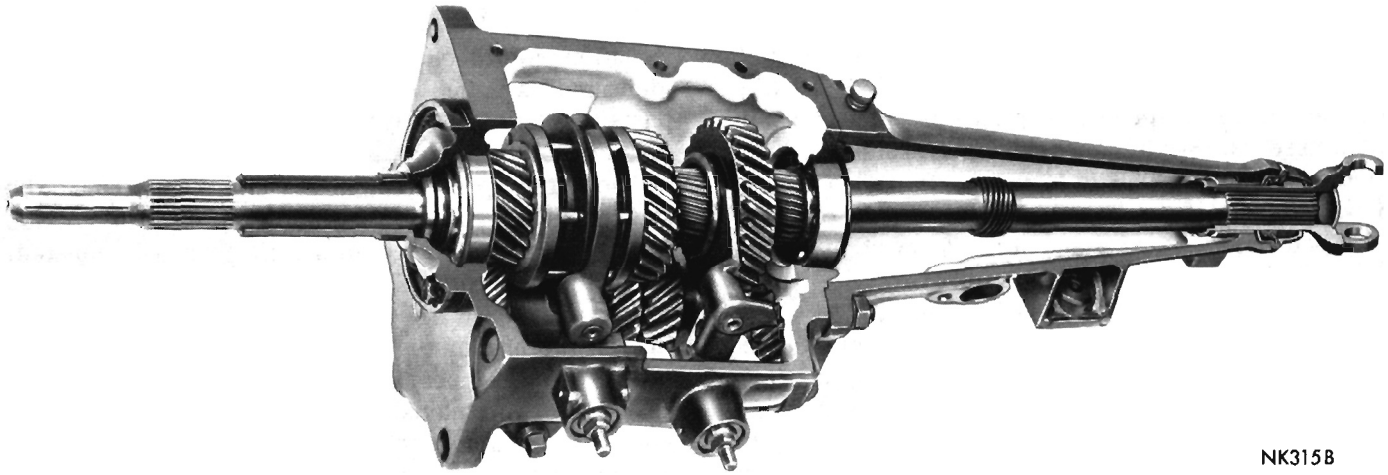

Fig. 1—A-903 Three Speed Transmission

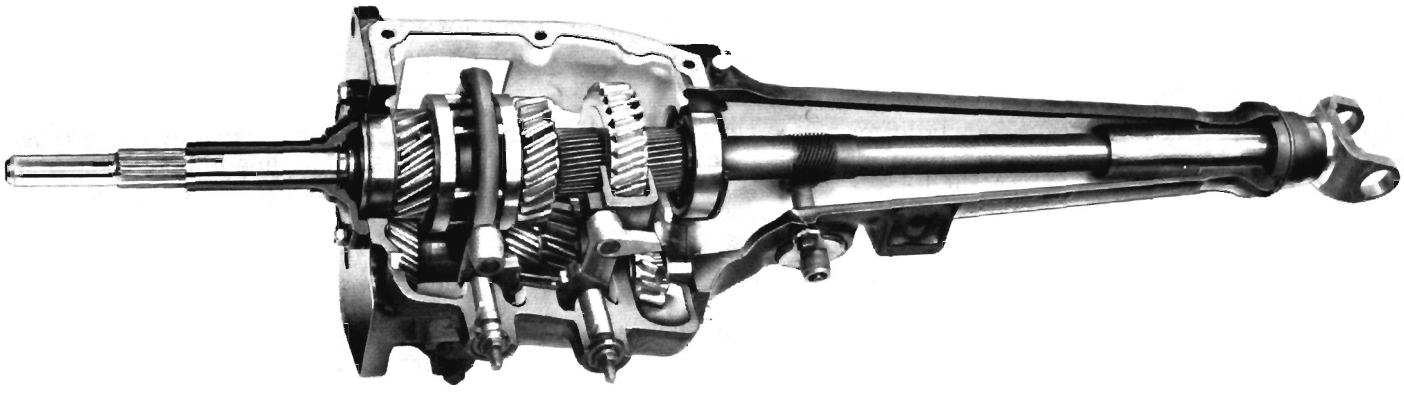

Fig. 2—A-745 Three Speed Transmission

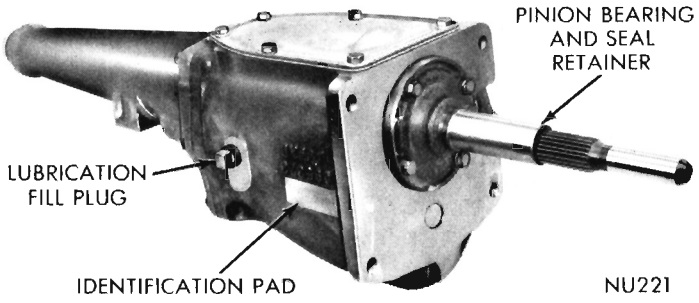

Fig. 3—Three Speed Transmission Identification Pad

so that both lever pins are engaged by cross-over blade (Fig. 5).

(5) Adjust 1st-reverse rod swivel by loosening clamp bolt and sliding swivel along rod so it will enter 1st-reverse lever at transmission. Install washers and clip. Tighten swivel bolt to 100 inch pounds.

(6) Remove tool from cross-over blade at steering column and shift through all gears to check adjustment and cross-over smoothness.

Belvedere (Fig. 6)

(1) Remove 2nd-3rd swivel from steering column lever and 1st-reverse swivel from transmission lever.

(2) Make sure transmission shift levers are in neutral (middle detent) position.

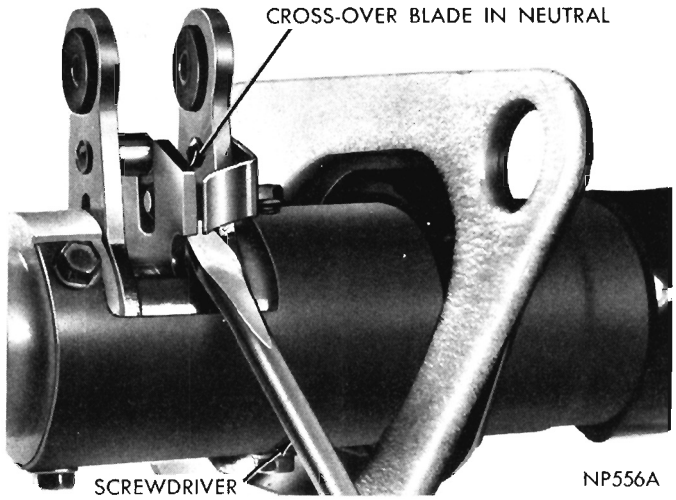

Fig. 5—Holding Cross-Over Blade in Neutral Position

(3) Loosen lock nut and adjust 2nd-3rd swivel so it will enter 2nd-3rd lever at steering column while the hand lever on steering column is held 12° above horizontal position. Install washers and clip. Tighten swivel nut to 70 inch-pounds.

(4) Place screwdriver or suitable tool between cross-over blade and 2nd-3rd lever at steering column so that both lever pins are engaged by cross-over blade (Fig. 5).

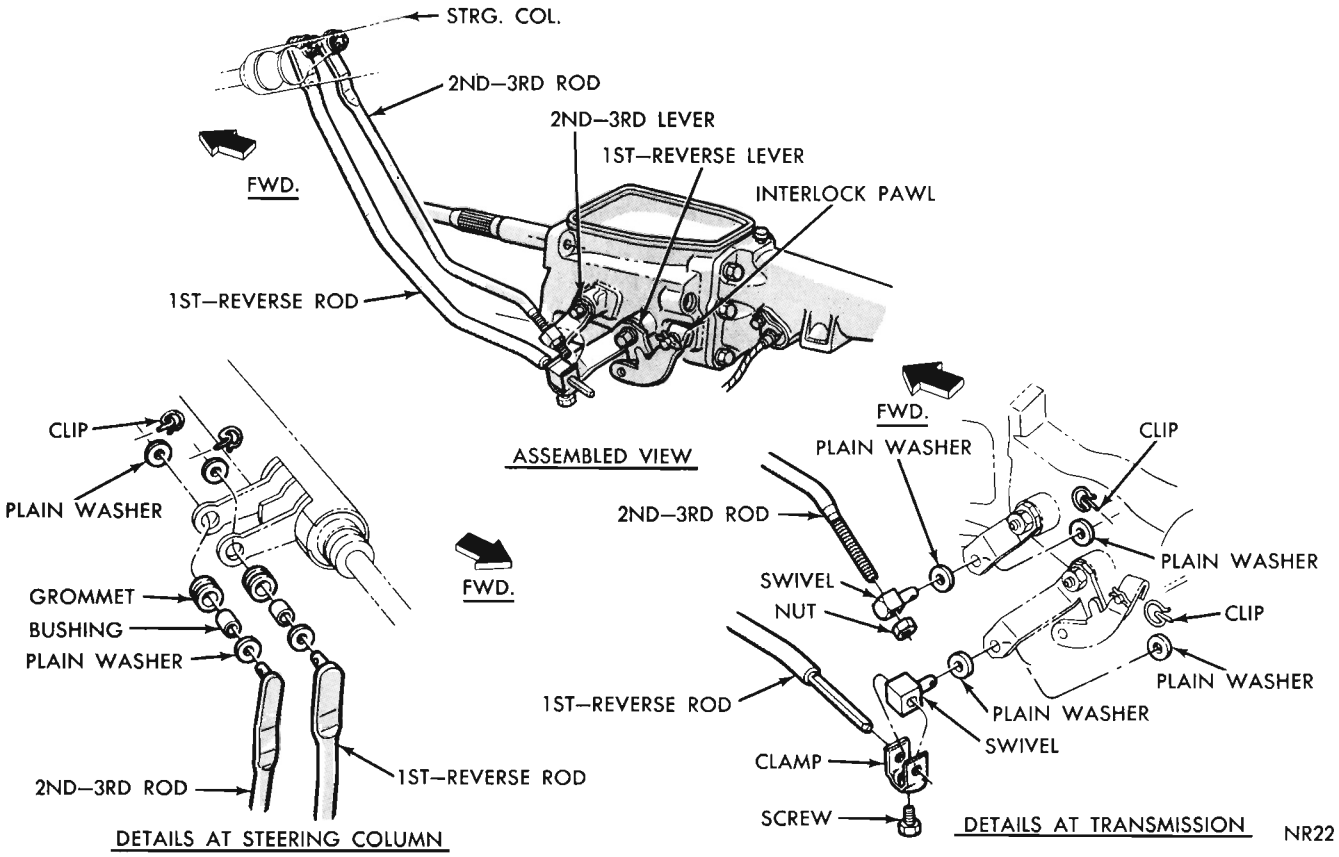

Fig. 4—Valiant or Barracuda Gearshift Linkage

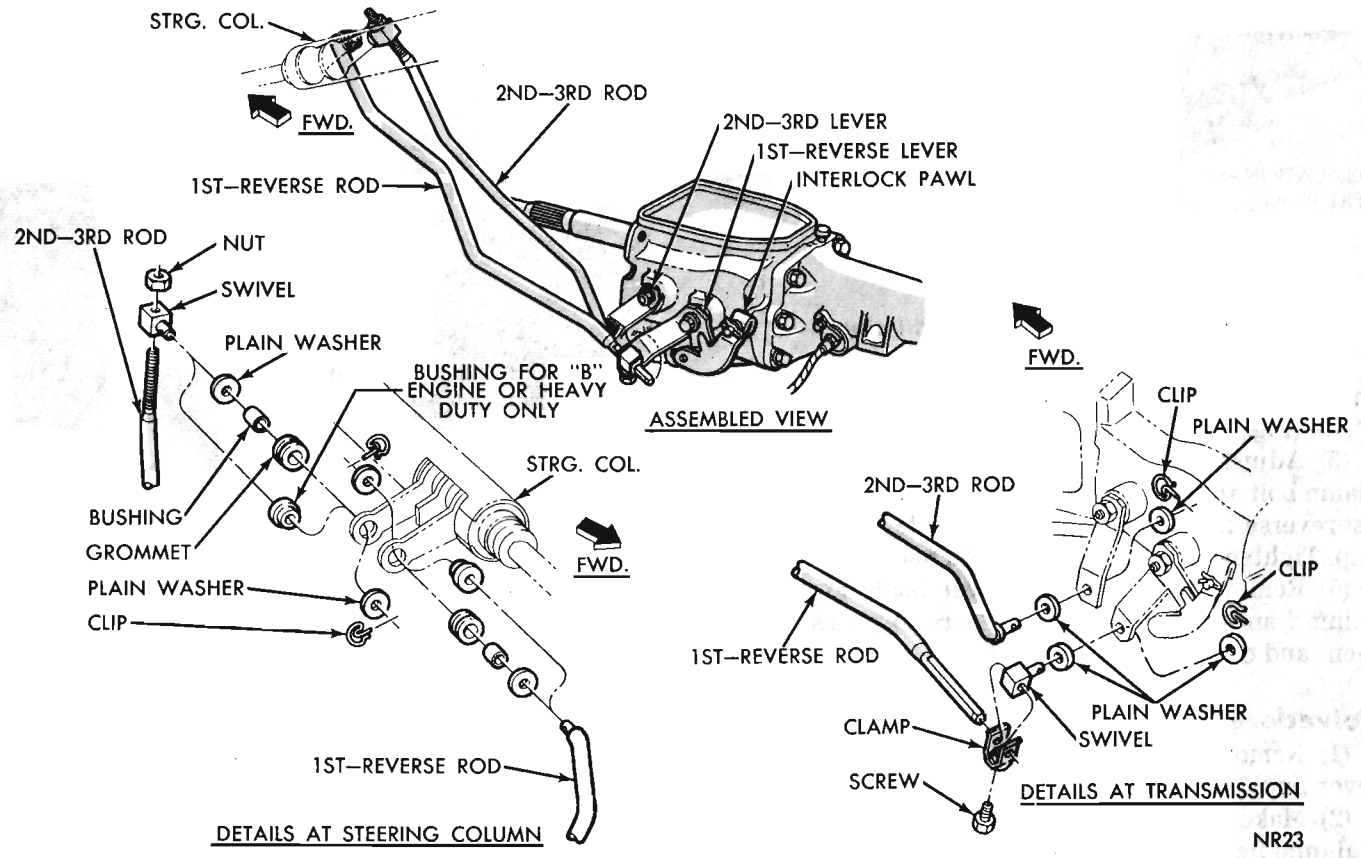

Fig. 6—Belvedere Gearshift Linkage

(5) Adjust 1st-reverse rod swivel by loosening clamp bolt and sliding swivel along rod so it will enter 1st-reverse lever at transmission. Install washers and clip. Tighten swivel bolt to 100 inch-pounds.

(6) Remove tool from cross-over blade at steering column and shift through all gears to check adjustment and cross-over smoothness.

Fury (Fig. 7)

(1) Remove 1st-reverse rod swivel from steering column and 2nd-3rd rod swivel from torque shaft lever.

(2) Make sure transmission shift levers are in neutral (middle detent) position.

(3) Adjust 2nd-3rd rod swivel by loosening clamp bolt and sliding swivel along rod so it will enter torque shaft lever while the hand lever on steering column is held 12° above horizontal position. Install washers and clip. Tighten swivel clamp bolt to 100 inch-pounds.

(4) Place screwdriver or suitable tool between cross-over blade and 2nd-3rd lever at steering column so that both lever pins are engaged by cross-over blade (Fig. 5).

(5) Adjust 1st-reverse rod swivel by loosening lock nut and turning swivel so it will enter 1st-reverse lever at steering column. Install washers and clip. Tighten swivel lock nut to 70 inch-pounds.

(6) Remove tool from cross-over blade at steering column and shift through all gears to check adjustment and cross-over smoothness.

Gearshift Interlock (Fig. 8)

(1) Disconnect clutch rod swivel from interlock pawl.

(2) Adjust clutch pedal free play as specified in clutch section.

(3) When first-reverse lever on transmission is in neutral (middle detent) position, the interlock pawl will enter the slot in first-reverse lever.

(4) Loosen swivel clamp bolt and slide swivel on rod to enter pawl. Install washers and clip. Hold interlock pawl forward and tighten swivel clamp bolt to 100 inch-pounds. Clutch pedal has to be in full returned position during this adjustment.

CAUTION: Do not pull clutch rod rearward to engage swivel in the pawl.

(5) Shift transmission in normal manner from neutral to first, and from neutral to reverse (disengage clutch while shifting and engage clutch when in gear). Clutch action should be normal.

(6) Disengage clutch and shift halfway to first or reverse. Clutch should now be held down by interlock to within 1 or 2 inches of floor.

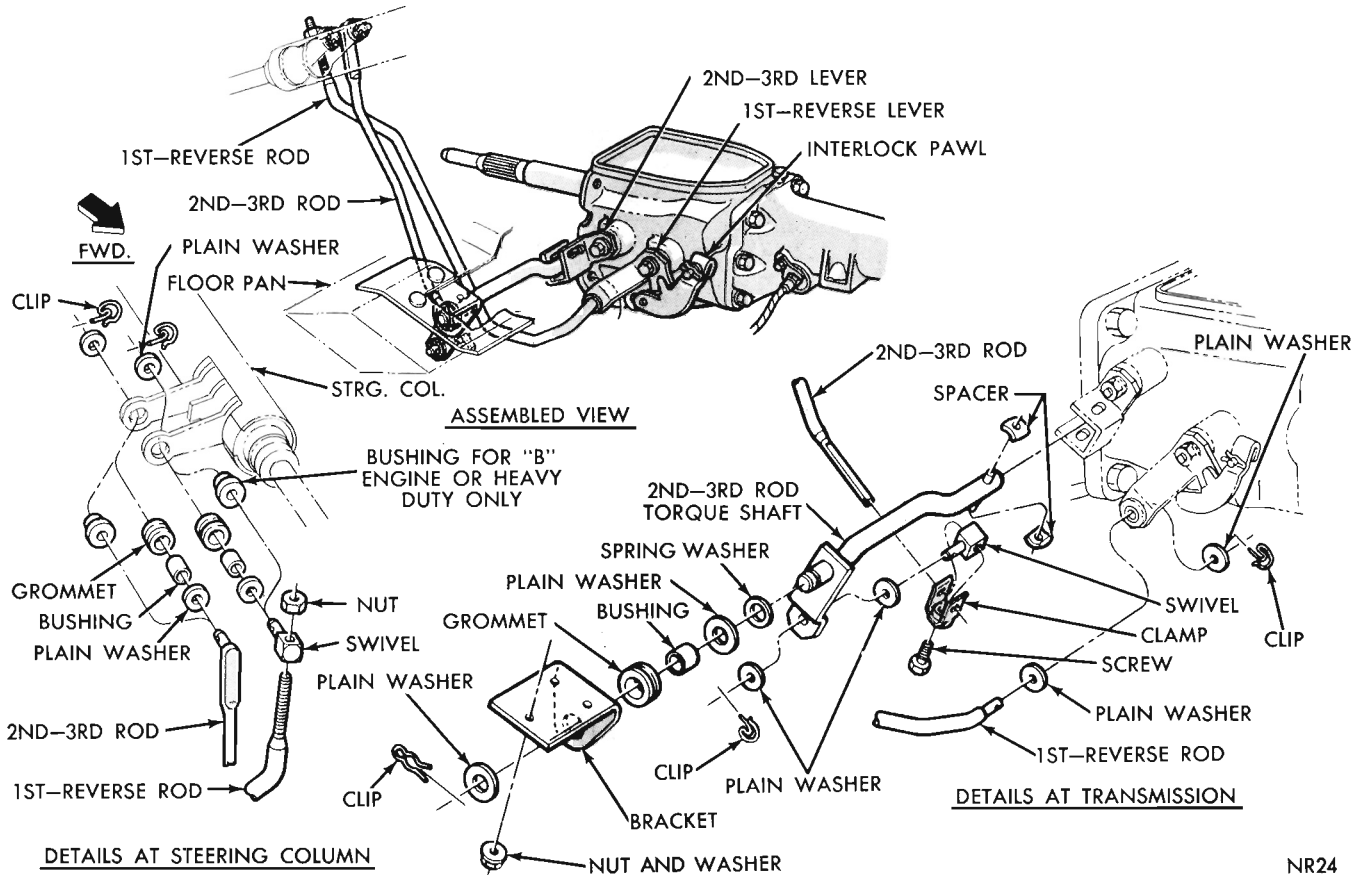

Fig. 7—Fury Gearshift Linkage

SPEEDOMETER PINION GEAR

Removal and Installation

Rear axle gear ratio and tire size determines pinion gear size requirements. Refer to "Speedometer Pinion Chart" in Specifications for pinion usage.

(1) Place drain pan under adapter or drain transmission.

(2) Remove bolt and retainer securing speedometer pinion adapter in extension housing (Fig. 9).

(3) With cable housing connected, carefully work adapter and pinion out of extension housing.

(4) If transmission fluid is found in cable housing, replace seal in the adapter (Fig. 10). Start seal and retainer ring in adapter, then push them into adapter with Tool C-4004 until tool bottoms (Fig. 11).

(5) Note number of gear teeth and install speedometer pinion gear into adapter (Fig. 10).

CAUTION: Before installing pinion and adapter assembly, make sure adapter flange and its mating area on extension housing are perfectly clean. Dirt or sand will cause mis-alignment resulting in speedometer pinion gear damage.

(6) With proper gear tooth range number in 6 o'clock position, carefully press assembly into extension housing (Fig. 9).

(7) Install retainer and bolt, with retainer tangs in adapter positioning slots. Tap adapter firmly into extension housing and tighten retainer bolt to 100 inch-pounds.

(8) Fill transmission to level of fill plug (Refer to Lubrication Section).

EXTENSION HOUSING AND BUSHING

Removal

(1) Drain transmission fluid.

(2) Disconnect propeller shaft at rear universal joint. Carefully pull shaft yoke out of transmission extension housing.

CAUTION: Be careful not to scratch or nick ground surface on sliding spline yoke during removal and installation of the shaft assembly.

(3) Remove the speedometer pinion and adapter.

(4) Remove bolts securing extension housing to crossmember. Raise transmission slightly with service jack and remove center crossmember (Fig. 12, 13 or 14).

(5) Remove extension housing to transmission bolts and slide extension housing off the mainshaft.

Bushing Replacement

(1) Remove extension housing yoke seal (Fig. 15) with Tool C-3994 or C-3985.

(2) Drive the bushing out of housing (Fig. 16) with Tool C-3996 or C-3974.

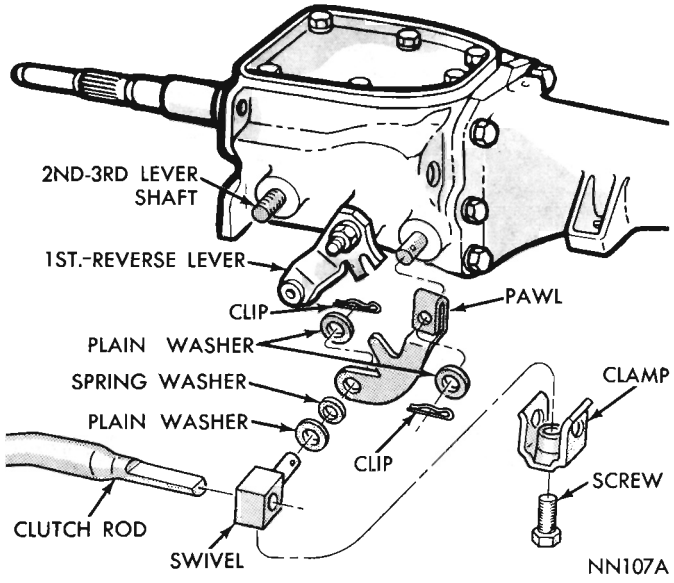

Fig. 8—Gearshift Interlock

(3) Slide a new bushing on installing end of Tool C-3996 or C-3974. Align oil hole in bushing with oil slot in housing, then drive bushing into place (Fig. 16).

(4) Drive a new oil seal into housing with Tool C-3995 or C-3972 (Fig. 17).

Installation

(1) Slide extension housing, with a new gasket, over mainshaft and down against the case. Install and tighten attaching bolts to 50 foot-pounds.

(2) Install center crossmember and tighten retaining bolts to 90 foot-pounds. Lower transmission, install extension housing to rear engine mount bolts and tighten to 40 foot-pounds. **FURY MODELS ONLY** (Fig. 14). Engine mount to center crossmember bolt and nut, loose assembled to this point, should now be torqued to 75 foot-pounds.

(3) Install the speedometer pinion and adapter.

(4) Carefully guide front universal joint yoke into extension housing and onto mainshaft splines. Connect propeller shaft to rear axle pinion yoke.

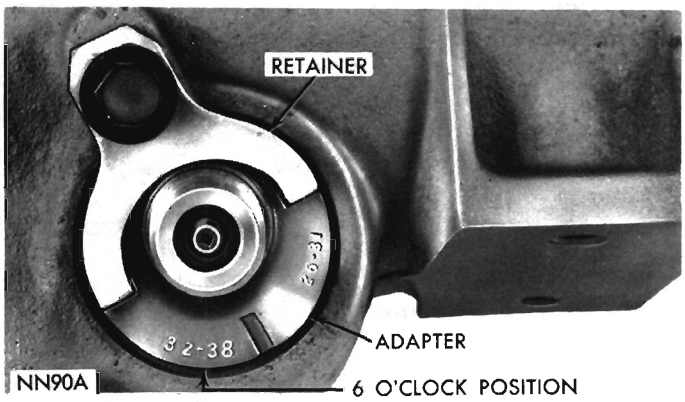

Fig. 9—Speedometer Pinion and Adaptor—Installed

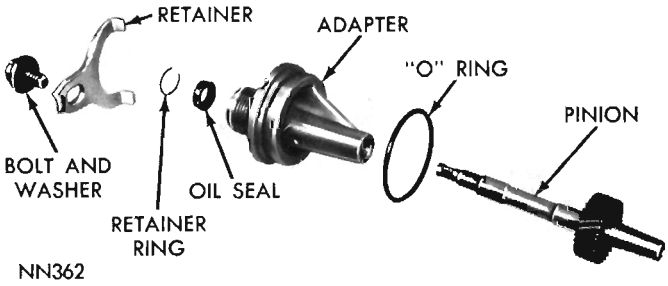

Fig. 10—Speedometer Pinion and Adaptor—Disassembled

(5) Fill transmission to level of fill plug (Refer to Lubrication Section).

EXTENSION HOUSING YOKE SEAL

Replacement

(1) Place drain pan under seal.

(2) Disconnect propeller shaft at rear universal joint. Carefully pull shaft yoke out of transmission extension housing.

CAUTION: Be careful not to scratch or nick ground surface on sliding spline yoke during removal and installation of the shaft assembly.

(3) Remove extension housing yoke seal (Fig. 15) with Tool C-3994 or C-3985.

(4) To install a new seal, position seal in opening of extension housing and drive it into housing with Tool C-3995 or C-3972 (Fig. 17).

(5) Carefully guide front universal joint yoke into extension housing and on the mainshaft splines. Connect propeller shaft to rear axle pinion shaft yoke.

(6) Fill transmission to level of fill plug (Refer to Lubrication Section).

SERVICE OUT OF VEHICLE

TRANSMISSION REMOVAL

Removal

(1) Drain lubricant from the transmission.

(2) Disconnect propeller shaft at rear universal joint. Carefully pull shaft yoke out of transmission extension housing.

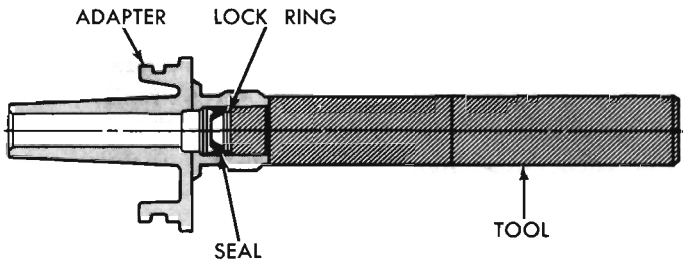

Fig. 11—Installing Speedometer Pinion Seal

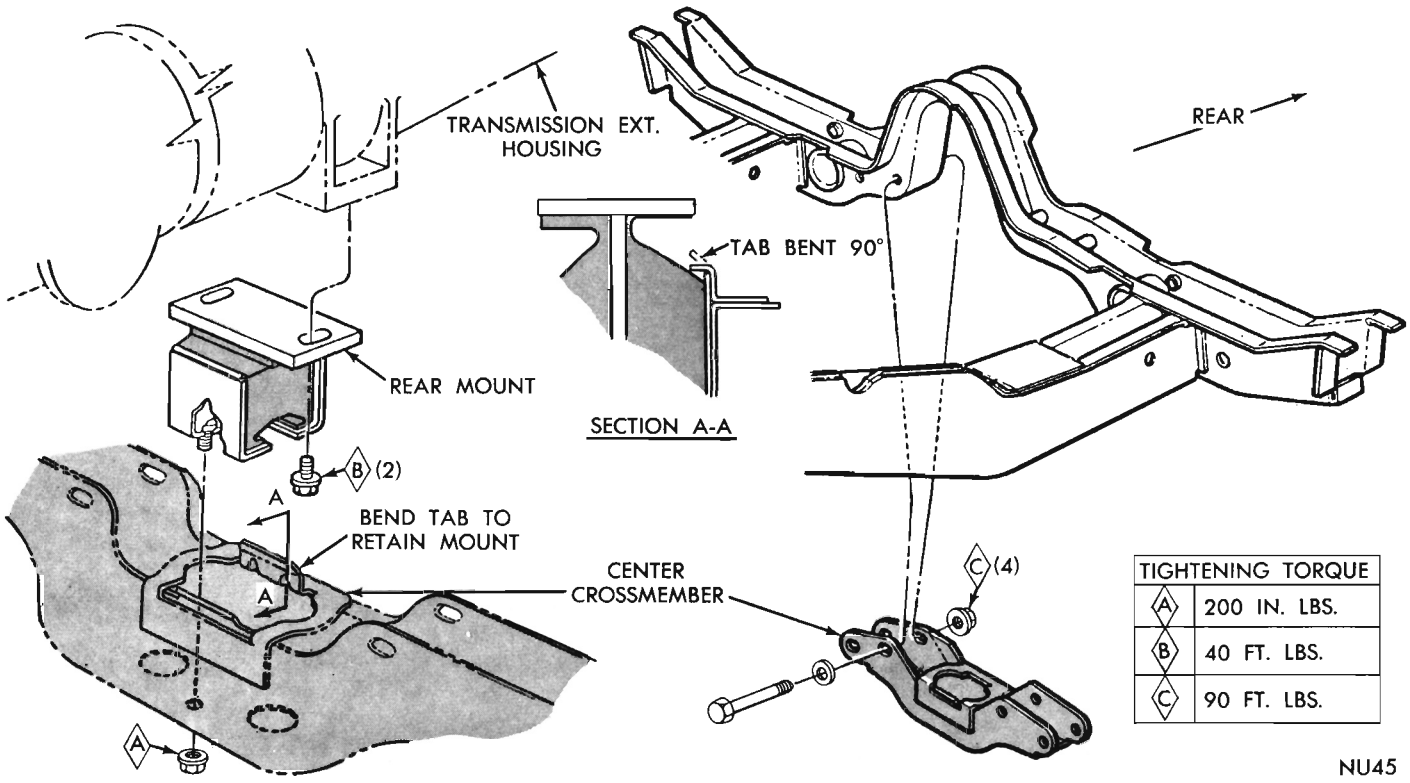

Fig. 12—Center Crossmember and Rear Engine Mount (Valiant Barracuda)

CAUTION: Be careful not to scratch or nick ground surface on sliding spline yoke during removal and installation of the shaft assembly.

(3) Disconnect speedometer cable, back-up light switch leads, gearshift and interlock control rods.

(4) Install engine support fixture C-3487, mounting hooks firmly into holes in the side frame members with support ends up against underside of oil pan flange. Use Adapter Leg C-3806 on 6-cyl. engines.

(5) Raise engine slightly with support fixture. Disconnect transmission extension housing from removable center crossmember. (Fig. 12, 13 or 14).

(6) Support transmission with a suitable jack and remove center crossmember. Remove bolts that attach transmission to clutch housing.

(7) Slide transmission rearward until pinion shaft

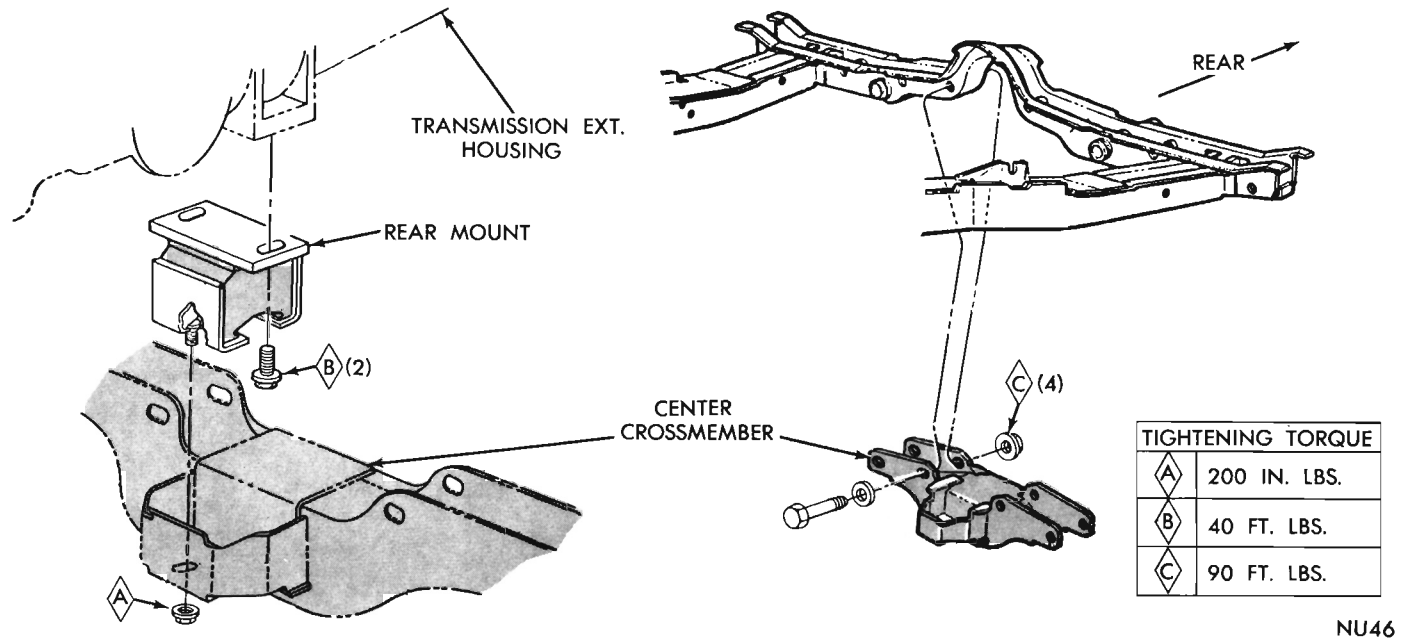

Fig. 13—Center Crossmember and Rear Engine Mount (Belvedere)

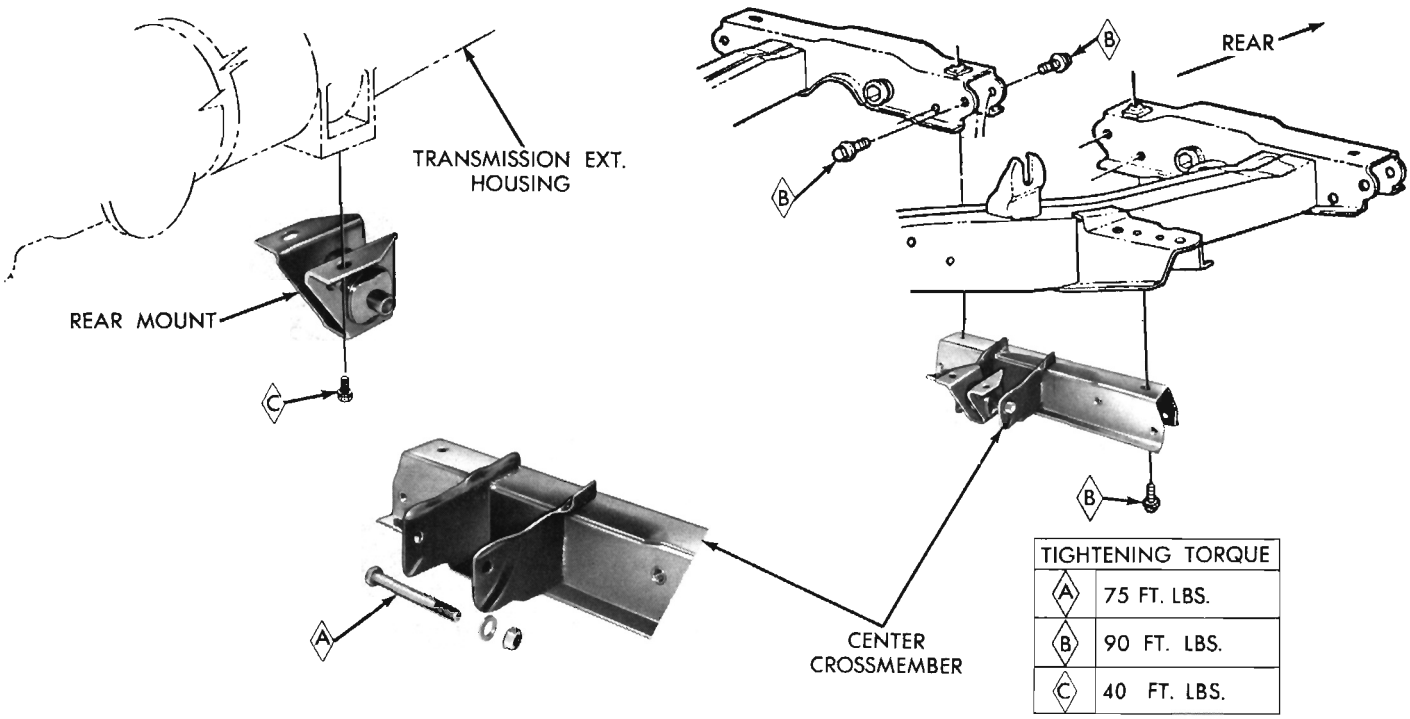

Fig. 14—Center Crossmember and Rear Engine Mount (Fury)

clears clutch disc before lowering transmission. (This precaution will avoid damaging the clutch disc.)

(8) Lower transmission and remove from under vehicle. Mount transmission in repair stand DD-1014.

DISASSEMBLING TRANSMISSION (Fig. 18 or 19)

(1) Remove bolts that attach cover to the case. Remove cover and gasket.

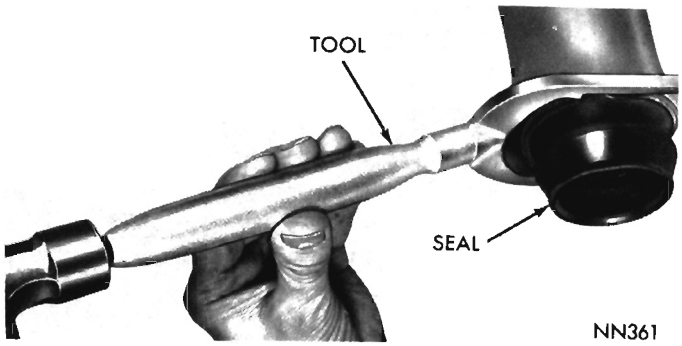

Fig. 15—Removing Extension Housing Yoke Seal

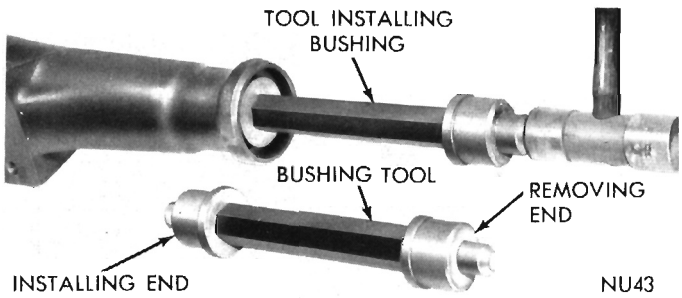

Fig. 16—Replacing Bushing In Extension Housing

(2) Using a pair of feeler gauges, measure synchronizer float. The measurement of the "float" should be taken before any further disassembly of transmission.

(3) The synchronizer "float" should be .060 to .117 inch, when measured between synchronizer outer ring pin and opposite synchronizer outer ring (Fig. 20). This measurement must be made on two pins, 180 degrees apart with equal gap on both ends for "float" determination.

(4) There should be a snug fit between pins and outer rings, similar to that obtained when measuring with a micrometer.

Extension Housing

(1) Remove bolt and retainer securing speedometer pinion adapter in extension housing (Fig. 9). Carefully work adapter and pinion out of extension housing.

(2) Remove bolts which attach extension housing to transmission case. Slide extension housing off mainshaft.

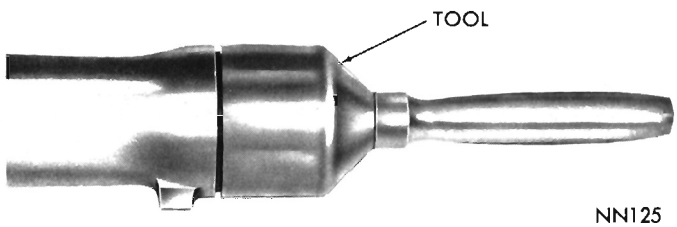

Fig. 17—Installing Extension Housing Yoke Seal

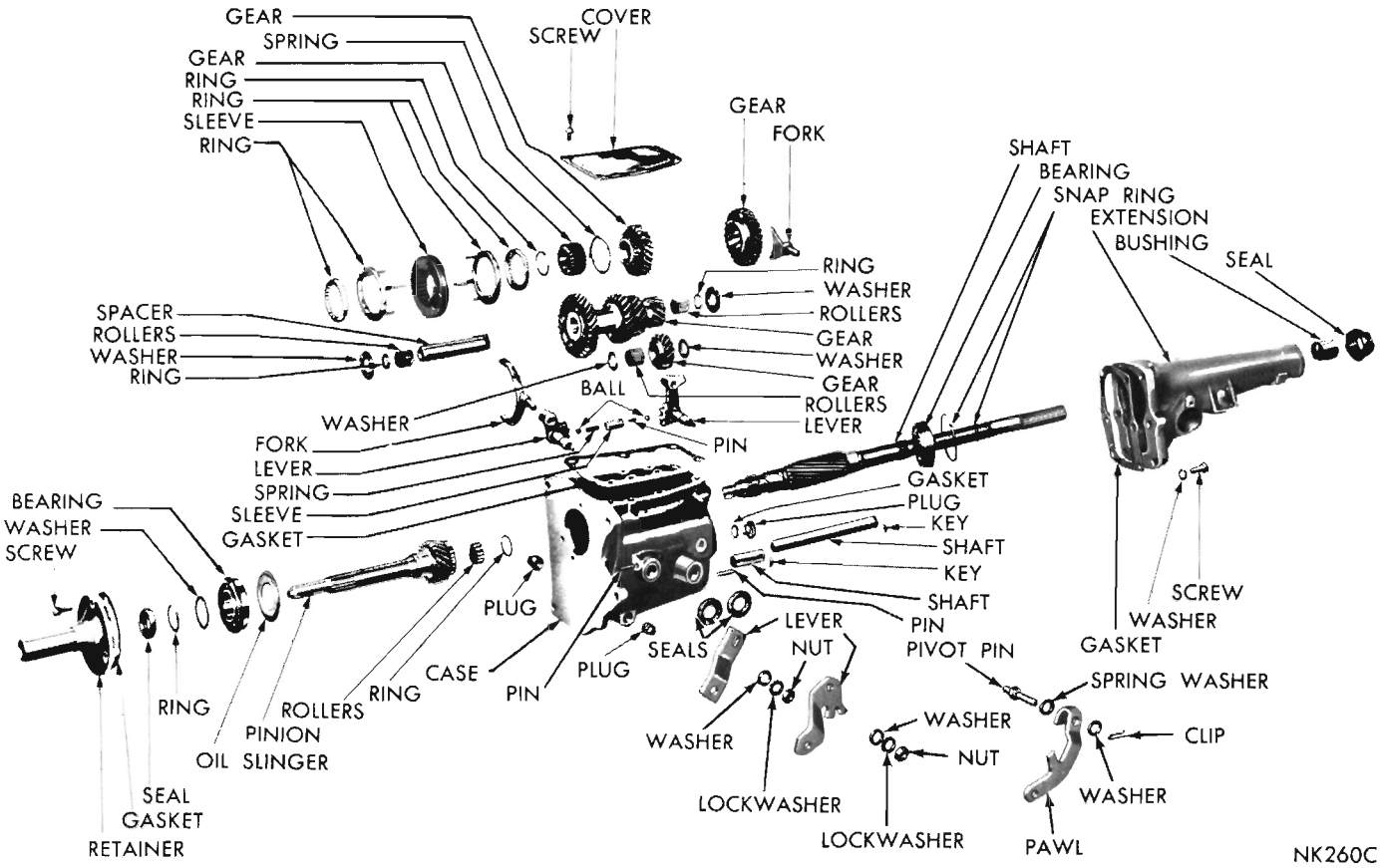

Fig. 18—A-903 Transmission Disassembled

Drive Pinion

(1) Remove bolts that attach drive pinion bearing retainer, then slide retainer off the pinion. Pry seal out of retainer, using a suitable tool. To avoid leakage around the new seal, do not nick or scratch the bore in which the seal is pressed, or the surface on which seal bottoms.

(2) Grasp pinion shaft and pull assembly out of case slightly, then slide synchronizer front inner stop ring from the short splines on pinion as assembly is being removed from the case (Fig. 21).

(3) Remove snap ring (Fig. 22), which locks bearing on pinion shaft. Remove pinion bearing washer (A-903 only), then carefully press pinion shaft out of bearing, using an arbor press. Remove oil slinger.

(4) Remove snap ring and bearing rollers from cavity in end of drive pinion.

Mainshaft

(1) With transmission in reverse, remove mainshaft rear bearing outer selective snap ring, then partially remove mainshaft.

(2) Cock mainshaft, then remove clutch sleeve, outer synchronizer rings, front inner ring and 2-3 shift fork (Fig. 23 or 24).

(3) Remove clutch gear retaining snap ring (Fig. 25). Slide clutch gear off end of mainshaft.

(4) Slide second speed gear, stop ring and synchronizer spring off mainshaft (Fig. 26).

(5) Remove low and reverse sliding gear and shift fork (Fig. 27), as mainshaft is completely withdrawn from the case.

(6) Remove selective snap ring and rear bearing from the mainshaft.

Countershaft Gear

(1) Using a feeler gauge, measure end play of countershaft gear (Fig. 28). The end play should be from .005″ to .022″ (A-903) or .005″ to .028″ (A-745). (This measurement will determine if new thrust washers are to be installed at reassembly).

(2) Using countershaft bearing arbor, Tool C-578 for A-903 transmission or C-3834 for A-745 transmission, drive countershaft toward rear of case until small key can be removed from countershaft.

(3) Drive countershaft remaining way out of case, keeping arbor tight against end of countershaft to prevent loss of bearing rollers.

(4) Remove countershaft gear, thrust washers and thrust plate (A-745 only) from the case.

(5) Remove bearing rollers, washers and center spacer from countershaft gear.

Reverse Idler Gear

(1) Using a suitable drift, drive reverse idler gear

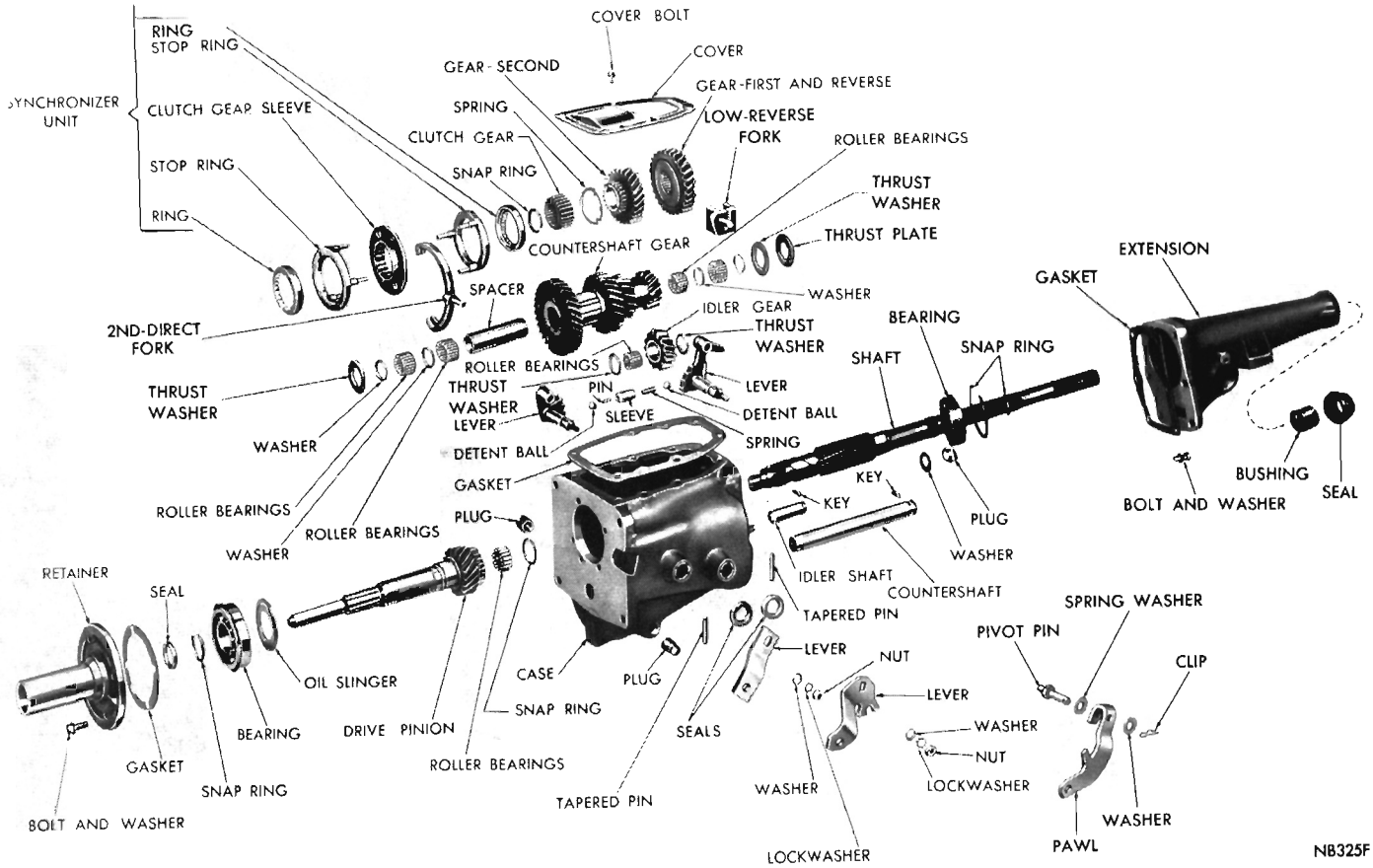

Fig. 19—A-745 Transmission Disassembled

shaft towards rear and out of the case. Remove woodruff key from end of shaft.

(2) Lift reverse idler gear and thrust washers out of the case. Remove bearing rollers from gear.

Gearshift Mechanism

(This operation need only be done if the seals are leaking.)

(1) Remove operating levers from their respective shafts.

(2) Drive out tapered retaining pin from either of the two lever shafts, then withdraw lever shaft from inside transmission. (The detent balls are spring loaded; as shaft is being withdrawn, the ball will drop to bottom of the case.)

(3) Remove interlock sleeve, spring, pin and both balls from the case (Fig. 29 or 30). Drive out remaining tapered pin, then slide lever shaft out of transmission.

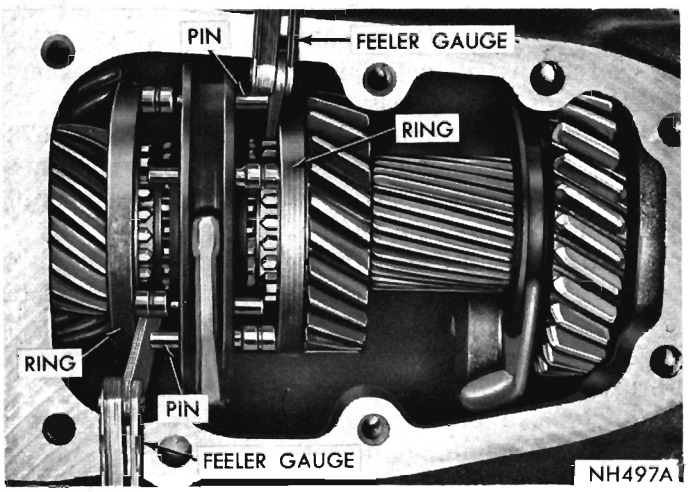

Fig. 20—Measuring Synchronizer "FLOAT"

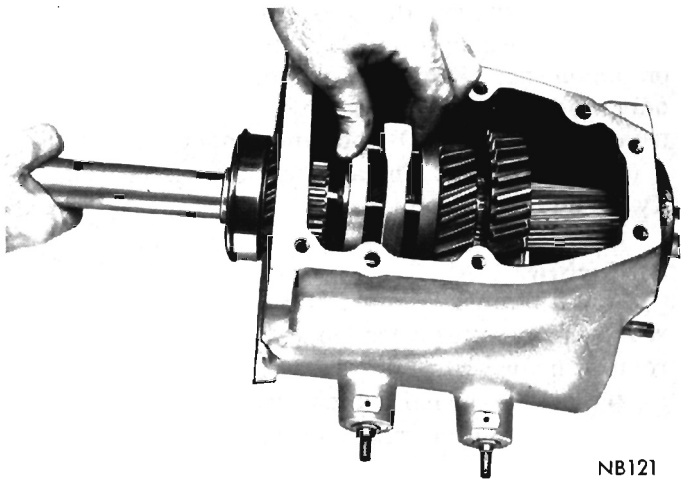

Fig. 21—Removing Drive Pinion Assembly

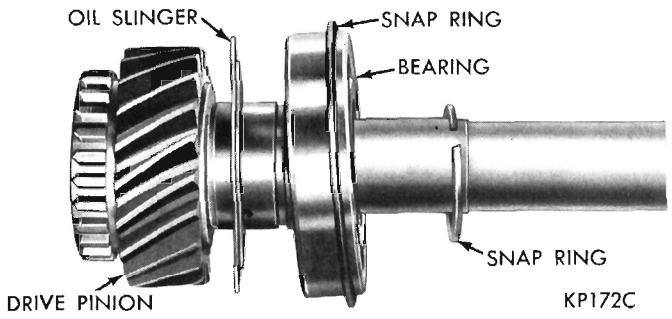

Fig. 22—Drive Pinion Assembly

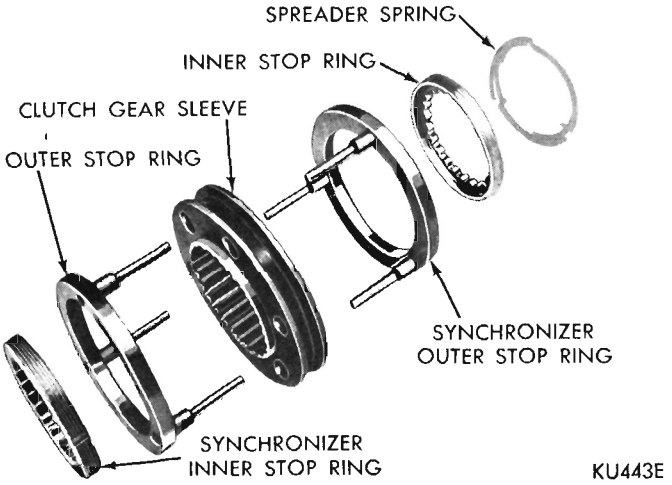

Fig. 23—A-903 Synchronizer Unit

(4) Using a suitable drift, drive out lever shaft oil seals.

CLEANING AND INSPECTION

Clean transmission case thoroughly, using a suitable solvent, dry with compressed air. Inspect case for cracks, stripped threads in various bolt holes and machined mating surfaces for burrs, nicks or any condition that would render case unfit for further service. The front mating surface should be smooth; if any burrs are present, dress them off with a fine mill file. If threads are stripped, install Helicoil inserts.

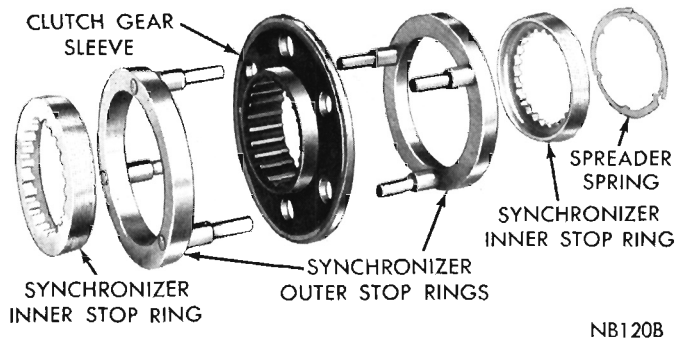

Fig. 24—A-745 Synchronizer Unit

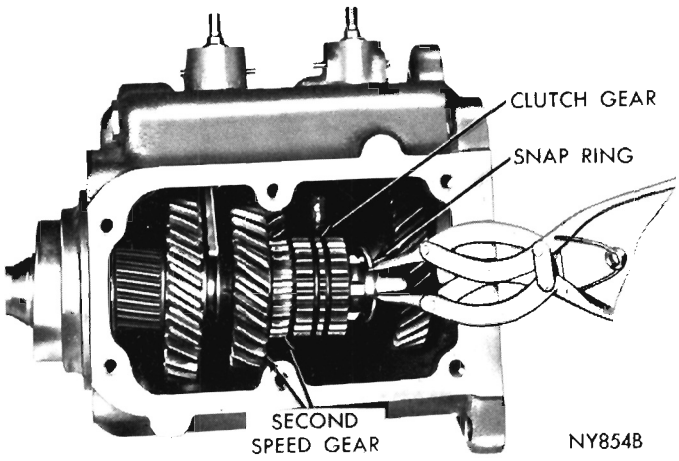

Fig. 25—Removing or Installing Snap Ring

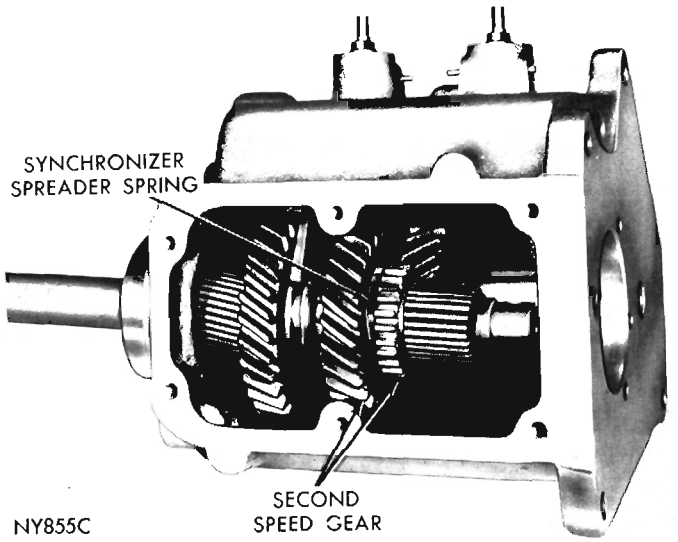

Fig. 26—Removing or Installing 2nd Speed Gear

Ball Bearings

Wash ball bearings, using a clean solvent and blow dry with compressed air.

CAUTION: Do not spin bearings with air pressure; turn slowly by hand. Spinning unlubricated bearings may cause damage to races and balls.

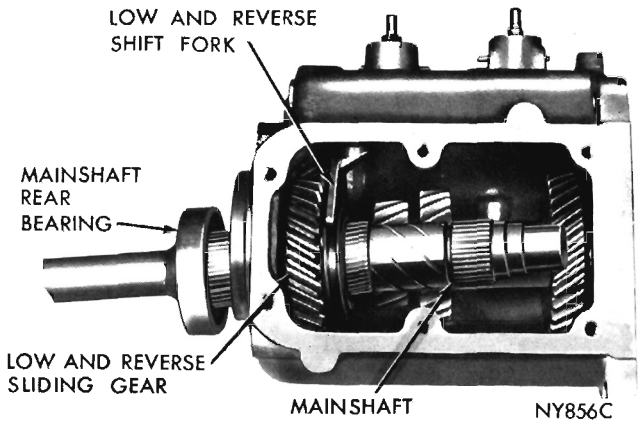

Fig. 27—Removing or Installing Mainshaft

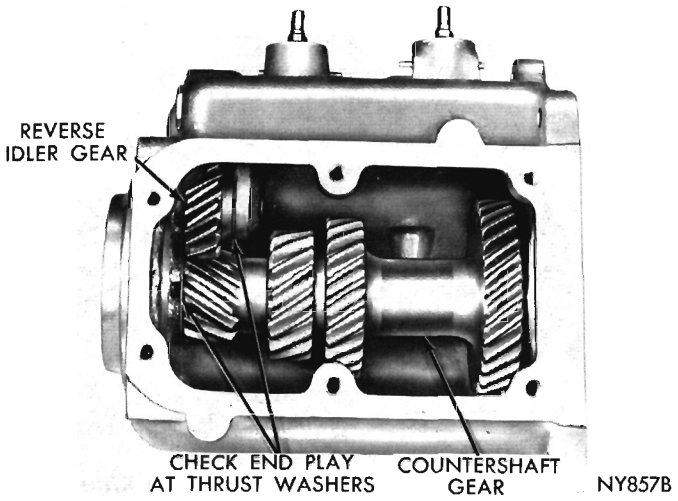

Fig. 28—Countershaft and Reverse Idler Gears

Be sure ball bearings are clean, then lubricate them with light grade engine oil. Inspect bearings for roughness. This can best be determined by slowly turning outer race by hand. Measure fit of bearings on their respective shafts.

Needle Type Bearing Rollers and Spacers

Inspect all bearing rollers for flat spots or brinnelling. Inspect all bearing roller spacers for signs of wear or galling. Install new parts as required.

Gears

Inspect gear teeth on synchronizer clutch gears and stop rings. If there is evidence of chipping or excessively worn teeth, install new parts at reassembly. Be sure clutch sleeve slides easily on the clutch gear. Inspect countershaft gear and all sliding gear teeth for chipped or broken teeth, or showing signs of excessive wear. Small nicks or burrs must be stoned off.

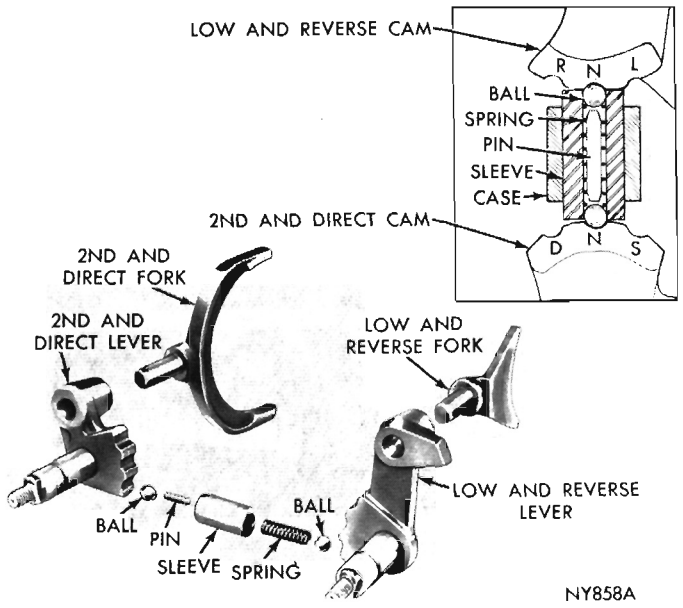

Fig. 29—A-903 Shift Forks and Levers

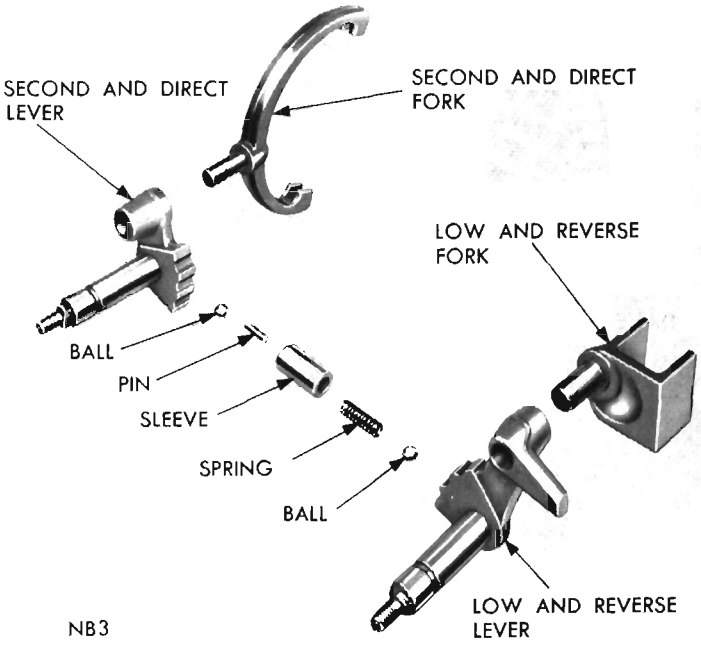

Fig. 30—A-745 Shift Forks and Levers

Inspect teeth on main drive pinion. If excessively worn, broken or chipped, a new pinion should be installed. If the oil seal contact area on drive pinion shaft is pitted, rusted or scratched, a new pinion is recommended for best seal life.

Test interlock sleeve and pin for free movement in bore of shift housing. Examine detent balls for signs of brinelling. If lever detents show signs of excessive wear to extent of not locking in gear, install a new part. Inspect shift forks for wear on the shanks and pads.

Synchronizer Stop Rings

Inspect gear teeth and threads on synchronizer inner stop rings for broken teeth or worn threads. Inspect pins on synchronizer outer stop ring assembly

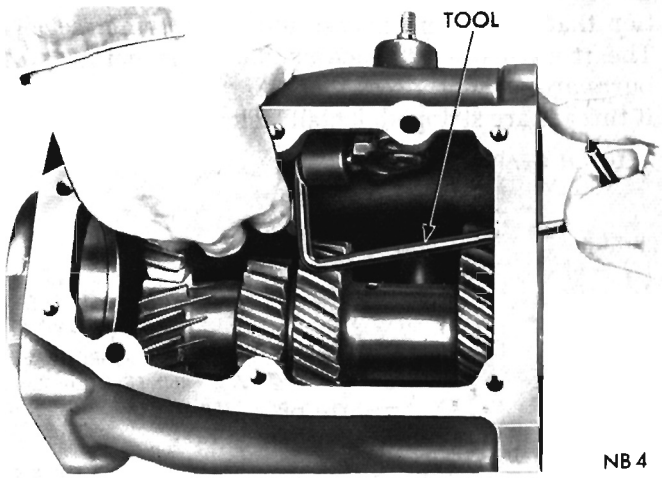

Fig. 31—Installing Detent Balls

for being straight and attached securely. Replace parts as required.

Mainshaft

Inspect mainshaft gear and bearing mating surfaces. If gear contact surfaces show signs of galling or are excessively worn, a new mainshaft should be installed.

Inspect snap ring grooves for burred edges. If rough or burred, remove condition using a fine file or crocus cloth. Inspect synchronizer clutch gear teeth on shaft for burrs.

ASSEMBLING TRANSMISSION (Fig. 18 or 19)

The grease recommended for use during reassembly proceedures is Automotive Multi-Purpose Grease NLGI Grade 2 E.P. or Multi-Mileage Lubricant, Part Number 2525035.

Countershaft Gear

(1) Slide countershaft gear bearing roller spacer over arbor Tool C-578 for A-903 transmission or C-3834 for A-745 transmission. Coat bore of gear with lubricant and slide tool and spacer in gear bore.

(2) **A-903:** Lubricate bearing rollers with heavy grease and install 22 rollers in each end of gear in area around arbor. Coat with heavy grease and install bearing spacer rings in each end of gear.

A-745: Lubricate bearing rollers with heavy grease and install 22 rollers next to spacer in each end of gear in area around arbor. Place a bearing spacer ring in each end of gear next to bearing rollers and install another row of 22 rollers in each end. Coat with heavy grease and install bearing spacer in each end of gear.

(3) **If countershaft gear end play was found to exceed specifications during disassembly, install new thrust washers.**

A-903: Coat with heavy grease and install thrust washer at each end of countershaft gear and over arbor. Install gear and arbor in the case making sure tabs on thrust washers slide into grooves in the case.

A-745: Coat with heavy grease and install front thrust washer over arbor at front of countershaft gear, with tabs outward. Install tabbed rear thrust washer over arbor with tabs positioned in grooves in the gear. Install remaining rear thrust washer plate over arbor at rear of gear. The washer plate must be installed so step on plate will engage on ledge inside rear of the case, thus preventing plate rotation. Install gear and arbor in the case making sure front thrust washer tabs slide into grooves in the case, and rear thrust washer step engages on the ledge.

(4) Using countershaft and a soft hammer, drive arbor forward out of countershaft gear and through bore in front of the case. Before driving countershaft all way into case, be sure keyway is positioned in line with key recess in rear of case. Insert shaft key and continue to drive countershaft forward in case until key is bottomed in recess.

Reverse Idler Gear

(1) Position arbor Tool C-464 in reverse idler gear and using heavy grease, install 22 roller bearings in gear.

(2) Place front and rear thrust washers at each end of reverse idler gear, and position assembly in transmission case with chamfered end of gear teeth toward front (Fig. 28).

(3) Insert reverse idler shaft into bore at rear of case with keyway to rear, pushing arbor toward front of transmission.

(4) With keyway aligned with recess in case, drive shaft forward, inserting key before keyway is obscured. Continue driving shaft forward until key seats in recess.

Gearshift Mechanism (Fig. 29 or 30)

(1) Place new shift lever shaft seals in their bores in the case. Using Tool C-3766, drive seals into case, until tool bottoms.

(2) Install seal protector, Tool C-3767 on end of low and reverse lever shaft, then slide shaft into rear boss of case and through the seal. Lock in position with tapered pin. Turn lever until center detent is in line with interlock bore.

(3) Slide interlock sleeve in its bore in case followed by one of the interlock balls. Install interlock spring and pin.

(4) Place remaining interlock ball on top of interlock spring, using Tool C-3765 (Fig. 31). (A good method of installing second ball is to stick ball in the tool recess by means of lubricant, then use tool to position ball on the detent spring.)

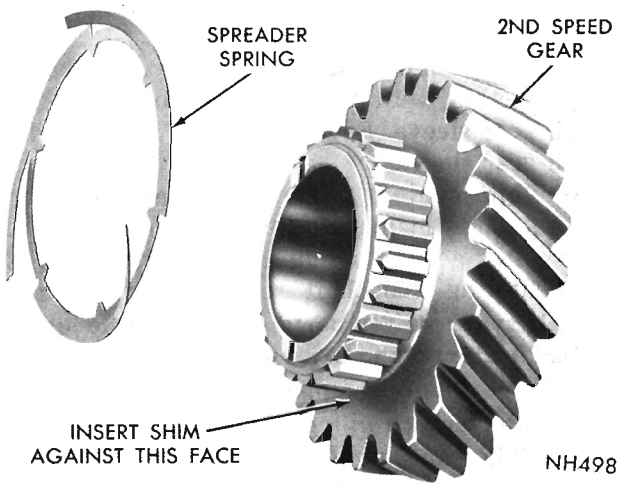

Fig. 32—Synchronizer "FLOAT" Shim Location

(5) Install seal protector Tool C-3767, on second and high lever shaft. Depress interlock ball, using Tool C-3765 and at same time install second and high lever shaft, with center detent aligned with detent ball. Remove the tool. Secure lever shaft with remaining tapered pin.

(6) Install operating levers, install washers and tighten retaining nuts to 18 foot-pounds.

(7) Place low and reverse fork in lever shaft, with offset toward rear of transmission (Fig. 29 or 30).

Mainshaft

(1) Install rear bearing on mainshaft and install snap ring. **This snap ring is a select fit.**

(2) While holding low and reverse sliding gear in position in fork (Fig. 27), insert mainshaft with rear bearing through rear of case and into sliding gear.

A-745: Position low-reverse sliding gear **with hub extension toward rear** to prevent interference in straddle type shift fork.

(3) Place synchronizer spreader spring, and then rear stop ring on synchronizer splines of 2nd speed gear. Install 2nd speed gear on mainshaft, (and/or shims if required).

In cases where synchronizer "float" measurement was above .117 inch, synchronizer shims should be installed to reduce "float" to .117 inch or less. Install shim on shoulder of second speed gear, before spreader spring is installed (Fig. 32).

If synchronizer "float" is below .060 inch, an equal amount of material should be removed from ends of all six synchronizer pins until synchronizer "float" is above .060 inch.

(4) Install synchronizer clutch gear on mainshaft. Install synchronizer clutch gear snap ring in mainshaft groove. Make certain ring is bottomed all way around in groove (Fig. 25).

(5) **A-903:** Install 2nd and direct fork in lever shaft with offset toward rear of transmission (Fig. 29).

A-745: Install 2nd and direct fork in the lever shaft (Fig. 30).

Hold synchronizer clutch gear sleeve and two outer rings together, with pins properly entered in holes in clutch gear sleeve. Engage 2nd and direct fork with clutch gear sleeve.

(6) While holding synchronizer parts and fork in position, slide mainshaft forward, entering synchronizer clutch gear into clutch gear sleeve and at same time entering mainshaft rear bearing in the case bore. **If synchronizer parts are not positioned as described in steps 5 and 6, it will not be possible to place them in position after mainshaft is fully in position, due to interference with countershaft gear.**

(7) While continuing to hold synchronizer parts in position, tap mainshaft forward until rear bearing bottoms in the case bore.

(8) Install mainshaft rear bearing snap ring in groove in the case bore. **This snap ring is a select fit.**

Drive Pinion

(1) Slide oil slinger (if removed) over pinion shaft and down against gear (Fig. 22).

(2) Slide bearing over pinion shaft (snap ring groove away from gear end), then seat on shaft, using an arbor press.

A-903: Install keyed washer between bearing and retaining snap ring.

(3) Secure bearing and washer with selected thickness snap ring. Four snap rings are available to eliminate end play.

Be sure snap ring is properly seated. If large snap ring around bearing was removed, install at this time.

(4) Place pinion shaft in a vise (with soft jaws), then install bearing rollers in cavity of shaft. 14 rollers for A-903 transmission and 15 rollers for A-745 transmission. Coat bearing rollers with heavy grease, then install bearing retaining ring in its groove.

(5) Install third gear inner stop ring (Fig. 23 or 24) in third gear outer stop ring. Guide drive pinion through front of case and engage inner stop ring with clutch teeth, then seat pinion bearing. The pinion shaft bearing is fully seated when snap ring is in full contact with the case.

(6) Install a new seal in pinion bearing retainer, using Tool C-3789 (Fig. 33).

(7) Using a new gasket, install drive pinion and retainer in the case. Install attaching bolts and tighten to 30 foot-pounds.

Extension Housing

(1) Using a new gasket, slide extension housing over mainshaft while guiding shaft through bushing and oil seal. Install and tighten attaching bolts to 50 foot-pounds. **Use sealing compound on bolt used in one hole tapped through transmission case.**

(2) Install transmission gasket and cover, install and tighten cover bolts to 12 foot-pounds.

(3) Install speedometer pinion and adapter assembly.

(4) Install drain plug and back-up light switch and tighten to 25 and 15 foot-pounds.

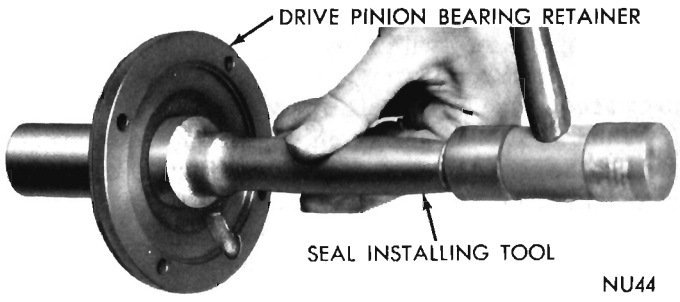

Fig. 33—Drive Pinion Seal Replacement

TRANSMISSION INSTALLATION

Place a small amount of Multi-Purpose Grease around inner end of pinion shaft pilot bushing in crankshaft and on pinion bearing retainer release bearing sleeve area. **Do not lubricate end of the pinion shaft, clutch disc splines or clutch release levers.**

(1) Remove transmission from repair stand, place it on a suitable jack and slide assembly under vehicle.

(2) Raise transmission until drive pinion shaft is centered in clutch housing bore.

(3) Roll transmission slowly forward until pinion shaft enters clutch disc with transmission in gear. Turn output shaft until splines are aligned, then push transmission forward until seated against clutch housing. **Do not allow transmission to "hang" after pinion has entered the clutch disc.**

(4) Install transmission attaching bolts and tighten to 50 foot-pounds. Remove the jack.

(5) Using a pointed drift, align crossmember bolt holes, then install attaching bolts. Tighten to 90 foot-pounds (Fig. 12, 13 or 14).

(6) Remove engine support fixture and disengage hooks from holes in frame side rails. Install extension housing to rear engine mount bolts and tighten to 40 foot-pounds. **FURY MODEL ONLY** (Fig. 14). Engine mount to center crossmember bolt and nut, loose assembled to this point, should now be torqued to 75 foot-pounds.

(7) Reconnect speedometer cable, gearshift rods and back-up light switch wires.

(8) Carefully guide front universal joint yoke into extension housing and onto mainshaft splines. Connect propeller shaft to rear axle pinion yoke.

(9) Fill transmission to level of fill plug (Refer to Lubrication Section).

(10) Road test vehicle, making sure transmission shifts smoothly and operates quietly.

MANUAL TRANSMISSION—A-833

FOUR SPEED

INDEX

	Page
Cleaning and Inspection	26
General Information	15
Service Diagnosis	16
Service In Vehicle	16
Extension Housing Yoke Seal	19
Four Speed Gearshift	16
Gearshift Linkage Adjustment	17
Speedometer Pinion Gear	18
Service Out of Vehicle	19
Assembling Transmission	26
Disassembling Transmission	19
Extension Housing Bushing Replacement	28
Transmission Installation	29
Transmission Removal	19
Specifications	96
Tightening Reference	98

GENERAL INFORMATION

The A-833 four speed transmission (Fig. 1) is available for all vehicles except those equipped with 6 cylinder engines.

A pad has been provided (Fig. 2) on right side of transmission for identification numbers.

SAMPLE NUMBER: PP 833 1861 0250.

First two letters indicate manufacturing plant; next three numbers indicate transmission model; next four numbers are a date code followed by serial numbers.

The main drive pinion and input shaft is supported by a ball bearing in the transmission case and an olite bushing pressed in the end of the crankshaft.

The mainshaft front end is supported by roller bearings in the end of the main drive pinion and a

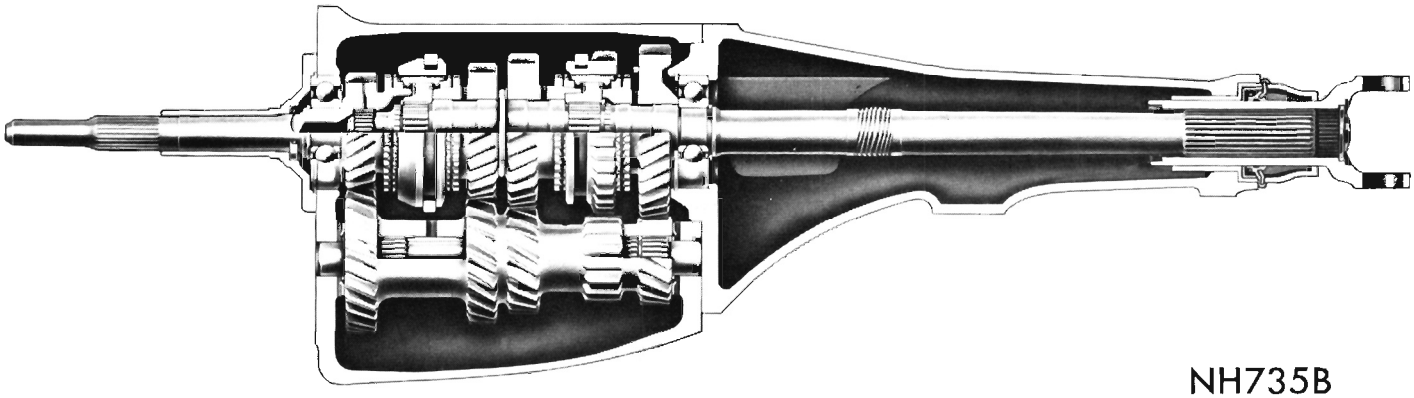

Fig. 1—A-833 Four Speed Transmission

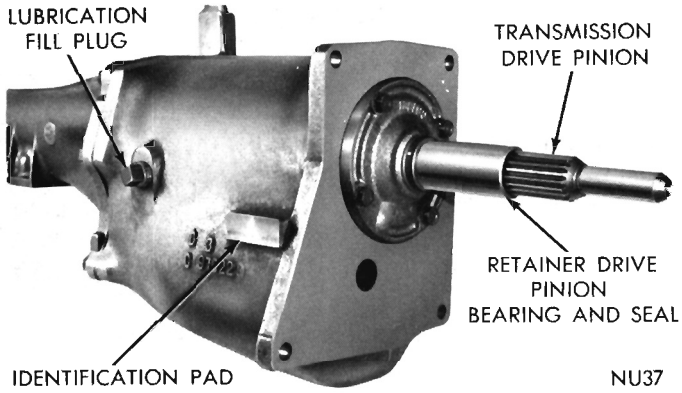

Fig. 2—Four Speed Transmission Identification Pad

ball bearing in the front of the extension housing. The output end of the mainshaft is splined to the sliding universal joint yoke, which is supported by a bushing in the extension housing.

The countershaft gear is supported by a double row of needle type roller bearings at each end and the thrust is taken on thrustwashers between the ends of the gear and the transmission case. The alignment of the needle type roller bearings within the gear is maintained by four thrust washers (one being used between the rows of roller bearings and one at each end).

The reverse idler gear is supported on a bronze bushing, pressed into the gear.

The gearshifting is manually operated through shift control rods to the transmission. Any forward gear may be engaged while the vehicle is in motion through the use of synchronizing clutches.

The transmission may be used as an aid to deceleration by downshifting in sequence without double clutching or gear clashing, due to the fact that all forward speeds are synchronized. The service procedures covering the four-speed transmission used on all vehicles so equipped is identical to the following service procedures except where noted.

IMPORTANT: Some internal transmission parts are different from standard on vehicles with high performance engines. These "special" parts are listed in applicable Parts Catalog; therefore, be sure they are used when replacement is necessary.

SERVICE DIAGNOSIS

Condition	Possible Cause	Correction
HARD SHIFTING	(a) Incorrect clutch adjustment.	(a) Refer to Clutch Group for corrections.
	(b) Improper cross-over adjustment.	(b) Perform cross-over adjustment as outlined in "Gearshift Linkage Adjustments."
	(c) Synchronizer clutch sleeve damaged.	(c-d-e) Causes noted can only be corrected by disassembling transmission and replacing damaged or worn parts.
	(d) Synchronizer spring improperly installed.	
	(e) Broken or worn synchronizer stop rings.	
TRANSMISSION SLIPS OUT OF GEAR	(a) Linkage interference.	(a) Inspect and remove all linkage interferences.
	(b) Gearshift rods out of adjustment.	(b) Adjust gearshift rods as outlined in "Gearshift Linkage Adjustments."
	(c) Second or direct speed gear synchronizer clutch teeth worn.	(c) Disassemble transmission and replace parts as necessary.
	(d) Clutch housing bore or face out of alignment.	(d) Refer to Clutch Group for correction procedures.
TRANSMISSION NOISES	(a) Excessive end play in countershaft gear.	(a) Replace thrust washers.
	(b) Loose synchronizer hub spline fit on mainshaft.	(b) Inspect mainshaft and synchronizer hub and replace parts as necessary.
	(c) Damaged, broken or excessively worn gear teeth.	(c) Replace worn gears.
	(d) Rough or pitted bearing races or balls.	(d) Replace worn bearing.

SERVICE PROCEDURES

SERVICE IN VEHICLE

FOUR SPEED GEARSHIFT

Removal (Fig. 3)

(1) Disconnect negative (ground) cable from battery.

(2) Loosen jam nut and unscrew gearshift lever knob.

(3) Remove console and wiring if so equipped (Fig. 4 or Fig. 5).

(4) Remove retaining screws from floor pan boot and slide up and off shift lever.

(5) Remove shift lever using a .010" feeler gauge as

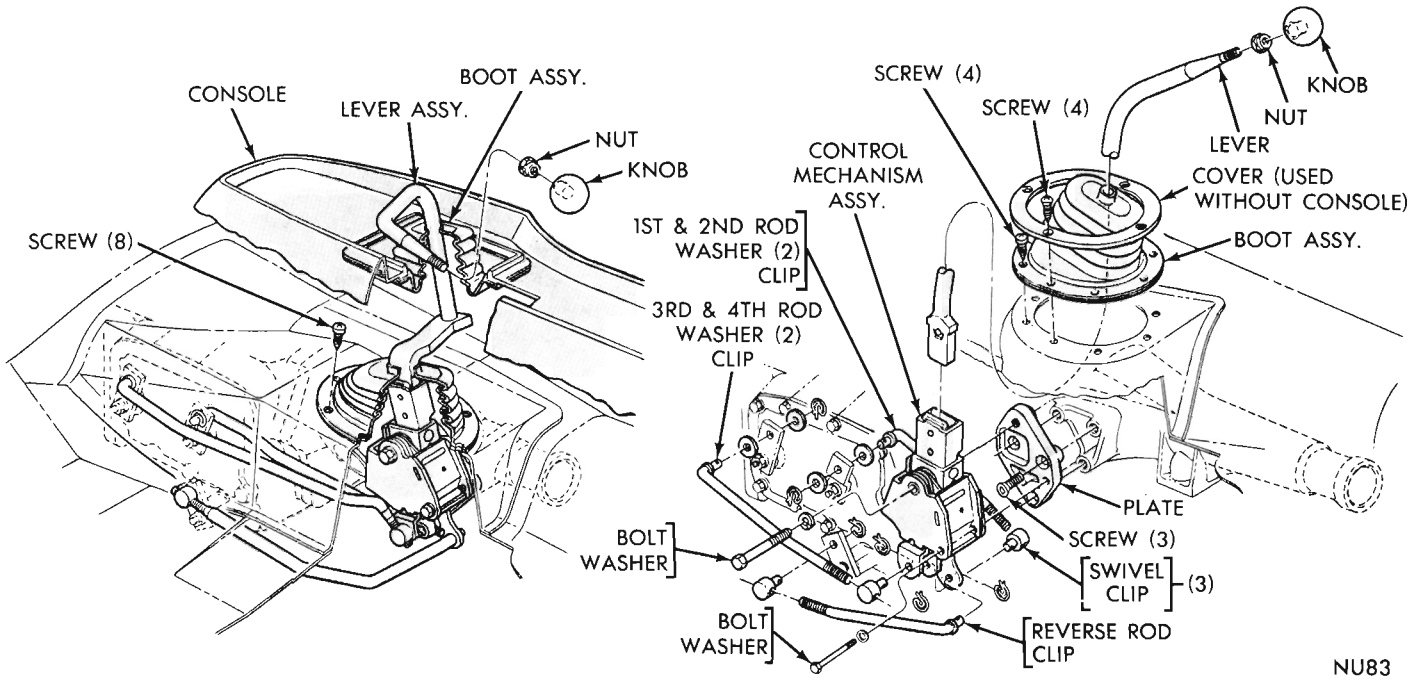

Fig. 3—Four Speed Gearshift Mechanism

a tool to release the internal spring clip as shown in (Fig. 6).

(6) Remove retaining clips, washers and control rods from shift unit levers.

(7) Remove two bolts and washers which secure shift unit to mounting plate on extension housing and remove unit.

Installation (Fig. 3)

(1) Fasten unit to extension housing mounting plate with two bolts and lock washers and tighten to 30 foot-pounds.

(2) Install shift rods, washers and clips.

(3) See next paragraph for adjustment procedure.

(4) Push Shift lever down into shift unit far enough for spring to click and lock lever in place. Pull up on lever to make sure it is locked in.

(5) Slide boot down over lever and fasten to floor pan.

(6) Install console and connect wiring if so equipped.

(7) Screw knob on gearshift lever and lock in proper position with jam nut. Reconnect battery cable.

GEARSHIFT LINKAGE ADJUSTMENT

(1) Install floor shift lever aligning Tool C-3951 (Fig.

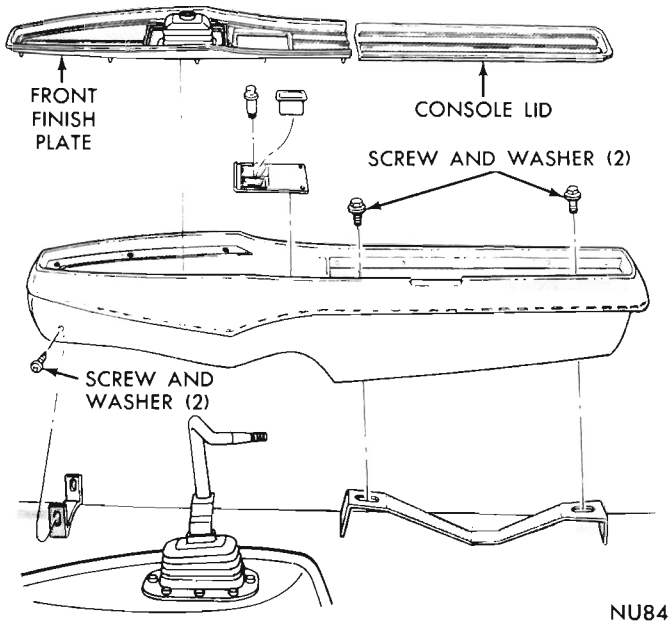

Fig. 4—Console Installation (Valiant or Barracuda)

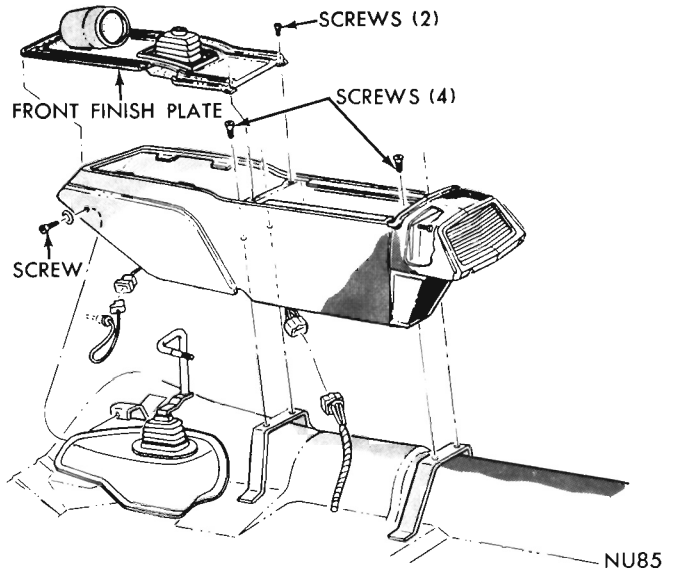

Fig. 5—Console Installation (Satellite or Fury)

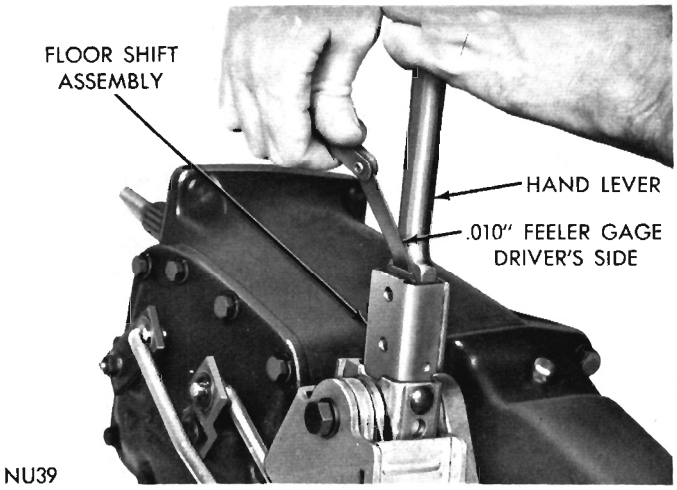

Fig. 6—Removing Floor Shift Hand Lever

7) to hold the levers in neutral-crossover position.

(2) With all rods removed from transmission shift levers, place levers in neutral detent positions.

(3) Rotate threaded shift rods to make length exactly right to enter transmission levers. Start with 1-2 shift rod (it may be necessary to pull clip at shifter end to rotate this rod).

(4) Replace washers and clips as shown in (Fig. 3).

(5) Remove aligning tool and test shifting action.

SPEEDOMETER PINION GEAR

Removal and Installation

Rear axle gear ratio and tire size determines pinion gear size requirements. Refer to "Speedometer Pinion Gear Chart" in Specifications for pinion usage.

(1) Place drain pan under adapter or drain transmission.

(2) Remove bolt and retainer securing speedometer pinion adapter to extension housing (Fig. 8).

(3) With cable housing connected, carefully work

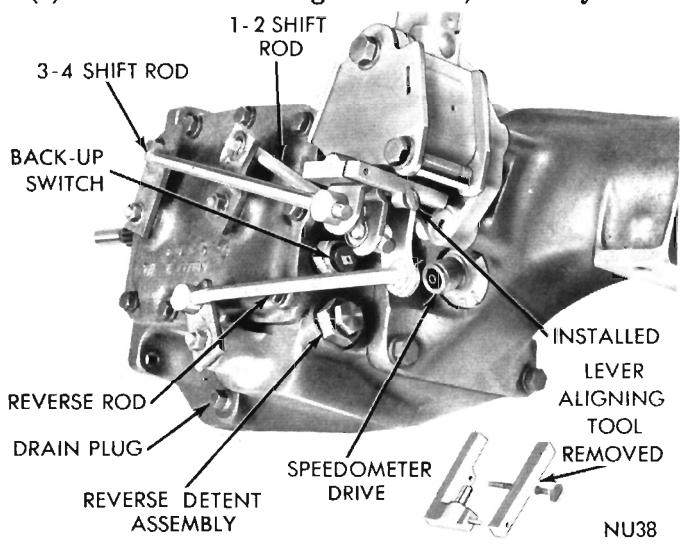

Fig. 7—Gearshift Linkage Adjustment

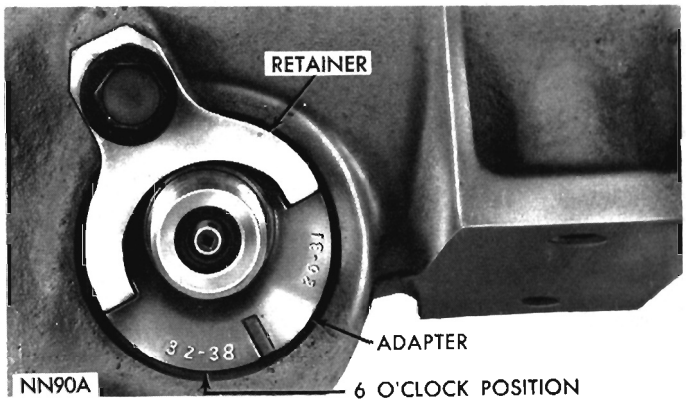

Fig. 8—Speedometer Pinion and Adapter—Installed

adapter and pinion out of extension housing.

(4) If transmission fluid is found in cable housing, replace seal in the adapter (Fig. 9). Start seal and retainer ring in adapter, then push them into adapter with Tool C-4004 until tool bottoms (Fig. 10).

(5) Note number of gear teeth and install speedometer pinion gear into adapter (Fig. 9).

CAUTION: Before installing pinion and adapter assembly, make sure adapter flange and its mating area on extension housing are perfectly clean. Dirt or sand will cause mis-alignment resulting in speedometer pinion gear damage.

(6) With proper gear tooth range number in 6 o'clock position, carefully press assembly into extension housing (Fig. 8).

(7) Install retainer and bolt, with retainer tangs in adapter positioning slots. Tap adapter firmly into ex-

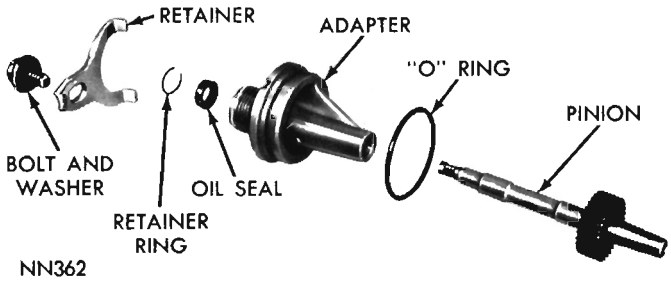

Fig. 9—Speedometer Pinion and Adapter—Disassembled

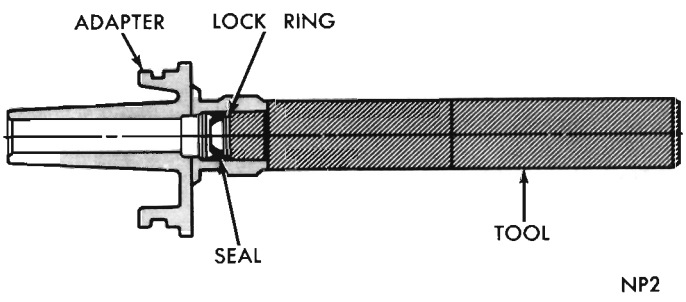

Fig. 10—Installing Speedometer Pinion Seal

tension housing and tighten retainer bolt to 100 inch-pounds.

(8) Fill transmission to level of fill plug (Refer to Lubrication Section).

EXTENSION HOUSING YOKE SEAL

Replacement

(1) Place drain pan under yoke seal.

(2) Disconnect propeller shaft at rear universal joint. Carefully pull shaft yoke out of transmission extension housing.

CAUTION: Be careful not to scratch or nick ground surface on sliding spline yoke during removal and installation of the shaft assembly.

(3) Remove extension housing yoke seal (Fig. 11) with Tool C-3985.

(4) To install a new seal, position seal in opening of extension housing and drive it into housing with Tool C-3972 (Fig. 12).

(5) Carefully guide front universal joint yoke into extension housing and on mainshaft splines. Connect propeller shaft to rear axle pinion shaft yoke.

(6) Fill transmission to level of fill plug (Refer to Lubrication Section).

SERVICE OUT OF VEHICLE

TRANSMISSION REMOVAL

(1) Remove console and 4-speed gearshift components, refer to "FOUR SPEED GEARSHIFT."

(2) Drain fluid from transmission.

(3) Disconnect propeller shaft at rear universal joint. Carefully pull shaft yoke out of transmission extension housing.

CAUTION: Be careful not to scratch or nick ground surface on sliding spline yoke during removal and installation of the shaft assembly.

(4) Disconnect speedometer cable and back-up light switch leads.

(5) Some models have exhaust systems which will have to be partially removed for clearance. See Exhaust Systems, Section 11.

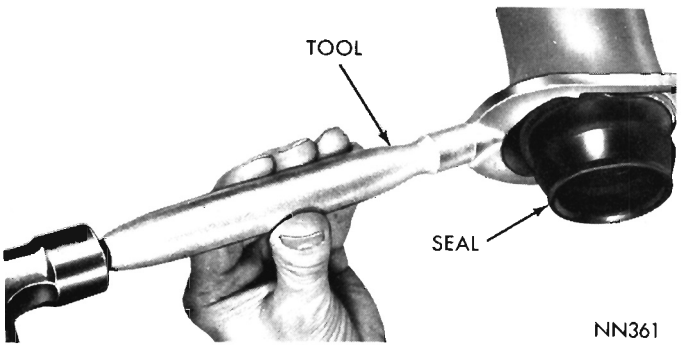

Fig. 11—Removing Extension Housing Yoke Seal

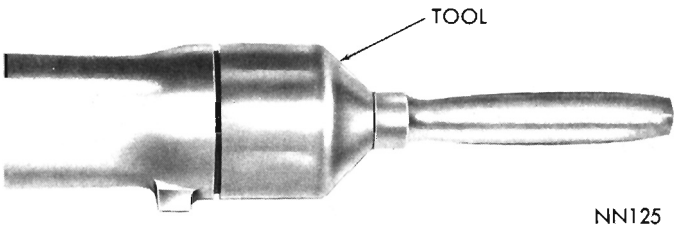

Fig. 12—Installing Extension Housing Yoke Seal

(6) Install engine support fixture C-3487, engaging the hooks in holes in frame side member. Be sure support ends are up against underside of oil pan flange.

(7) Raise engine slightly with support fixture. Disconnect extension housing from removable center crossmember (Fig. 13, 14 or 15).

(8) Support transmission with a suitable jack and remove center crossmember.

(9) Remove transmission to clutch housing bolts. Slide transmission toward rear until drive pinion shaft clears clutch disc, before lowering transmission.

(10) Lower transmission and remove from under vehicle. Thoroughly clean exterior of unit, preferably by steam. Mount transmission in repair stand DD-1014 (Fig. 16).

DISASSEMBLING TRANSMISSION (Fig. 17)

Gearshift Housing and Mechanism

(1) Remove reverse shift lever from shaft. Remove bolts that attach gearshift housing to transmission case (Fig. 18). With levers in neutral detent position, pull housing out and away from the case. (The first and second, third and fourth shift fork may remain in engagement with synchronizer sleeves.) Work forks out of sleeves and remove from the case. **The following three steps need only be done, if oil leakage is visible around gearshift lever shafts.**

(2) Remove nuts, lockwashers and flatwashers that attach first and second, third and fourth speed shift operating levers to the shafts. Disengage levers from flats on shafts and remove.

CAUTION: Make sure shafts are free of burrs before removal; otherwise the bores may be scored resulting in leakage after reassembly.

(3) Carefully push gearshift lever shafts out of housing, allowing detent balls to fall free.

(4) Slide gearshift interlock sleeve, interlock pin and spring out of housing.

Extension Housing and Mainshaft

(1) Remove bolt and retainer securing speedometer

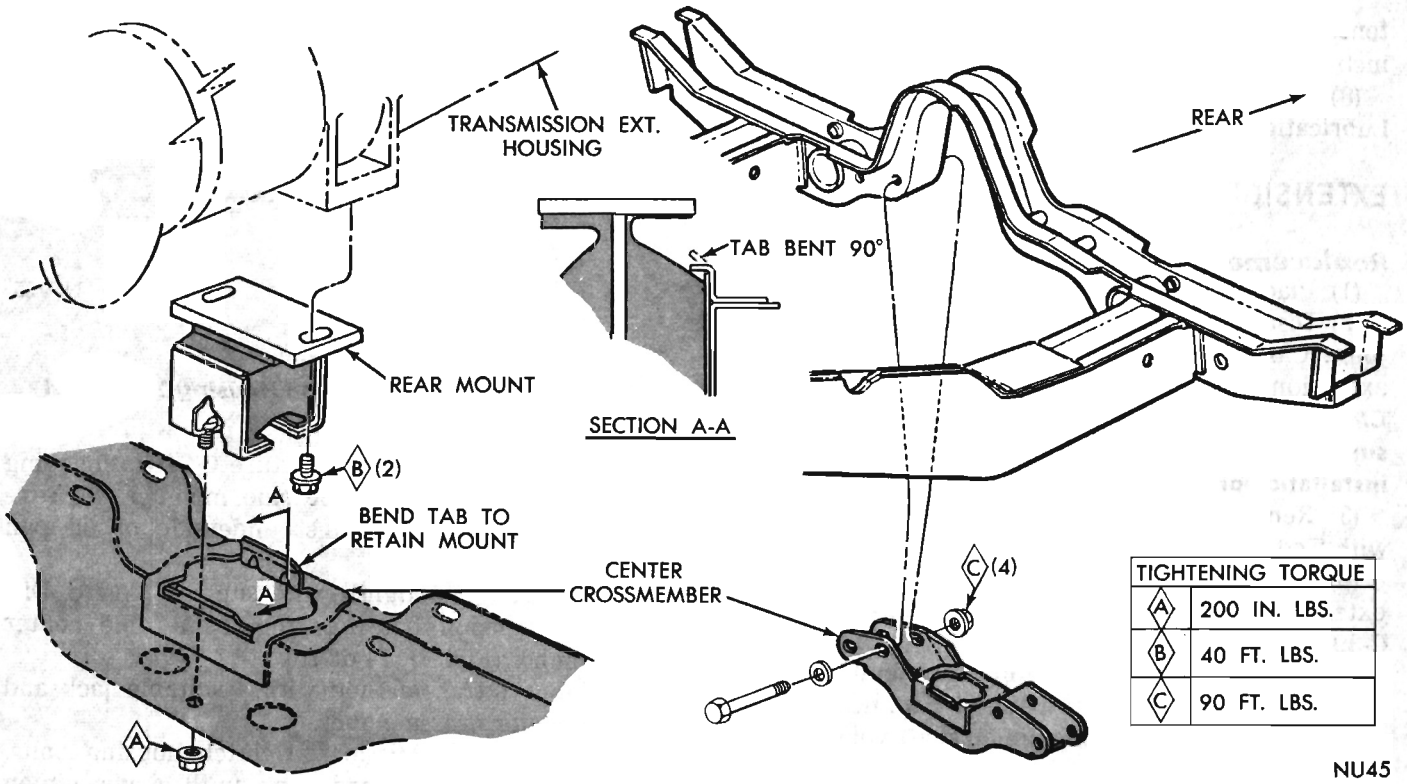

Fig. 13—Center Crossmember and Rear Engine Mount (Valiant and Barracuda)

pinion adapter in extension housing (Fig. 8). Carefully work adapter and pinion out of extension housing.

(2) Remove bolts that attach extension housing to transmission case.

(3) Slide third and fourth synchronizer sleeve slightly forward, then using a soft hammer, tap on extension housing (in a rearward direction). Slide housing and mainshaft assembly out and away from the case (Fig. 19).

(4) Refer to (Fig. 20) for location of various gears, synchronizer sleeves and clutches before disassembling mainshaft.

(5) Remove snap ring (Fig. 21), that retains 3rd and 4th synchronizer clutch gear and sleeve, slide 3rd and 4th synchronizer assembly off end of mainshaft.

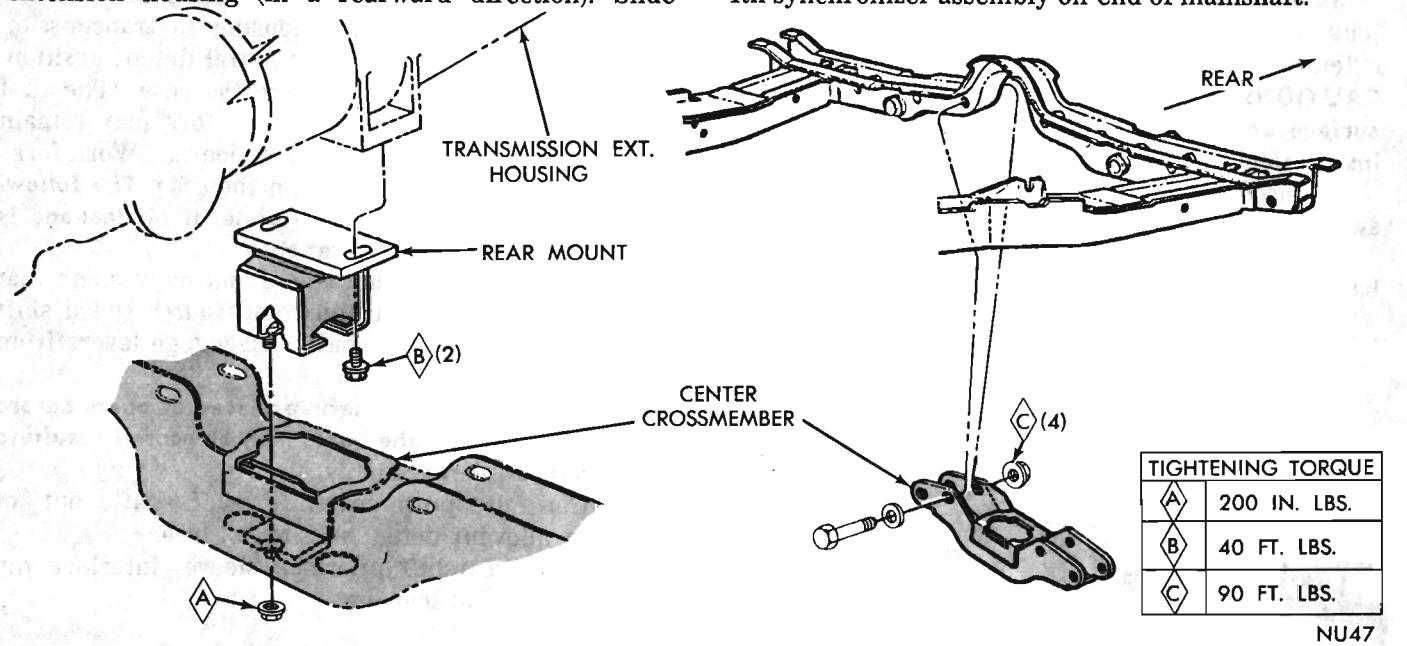

Fig. 14—Center Crossmember and Rear Engine Mount (Satellite)

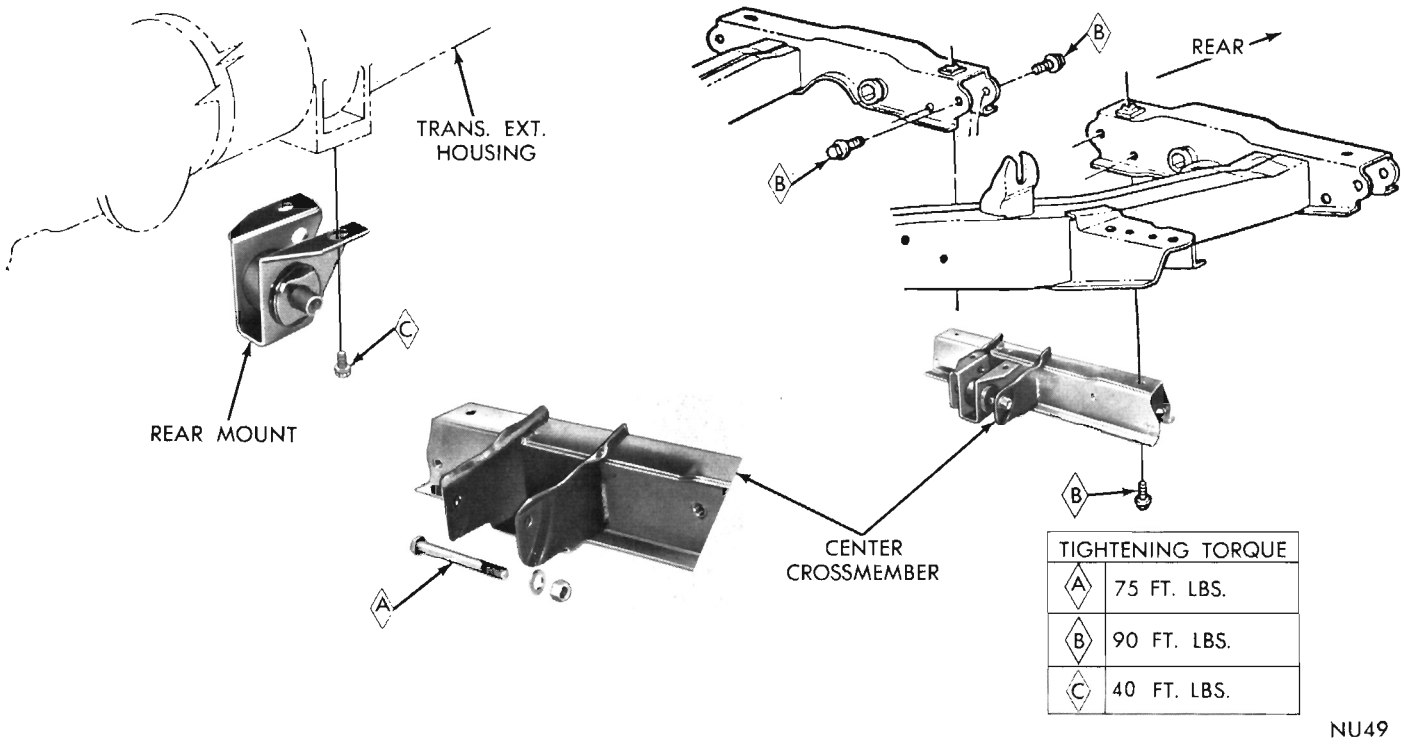

Fig. 15—Center Crossmember and Rear Engine Mount (Fury)

(6) Slide 3rd speed gear and stop ring off mainshaft. (Do not separate 3rd and 4th speed synchronizer clutch gear, sleeve, shift struts or springs unless inspection reveals a replacement part is required.)

(7) Using long nose pliers, compress snap ring that retains mainshaft ball bearing in extension housing (Fig. 22).

(8) Holding snap ring compressed, pull mainshaft assembly and bearing out of extension housing (Fig. 23). **HEAVY DUTY MODEL** (Fig. 24) has snap ring in outer race of bearing. Use snap ring pliers to expand and hold this ring while removing mainshaft and bearing from extension housing.

(9) Remove snap ring that retains mainshaft bearing on the shaft (Fig. 25). Remove bearing from mainshaft by inserting steel plates on front side of 1st speed gear, then press or drive rear bearing off mainshaft. (Be careful not to damage gear teeth.)

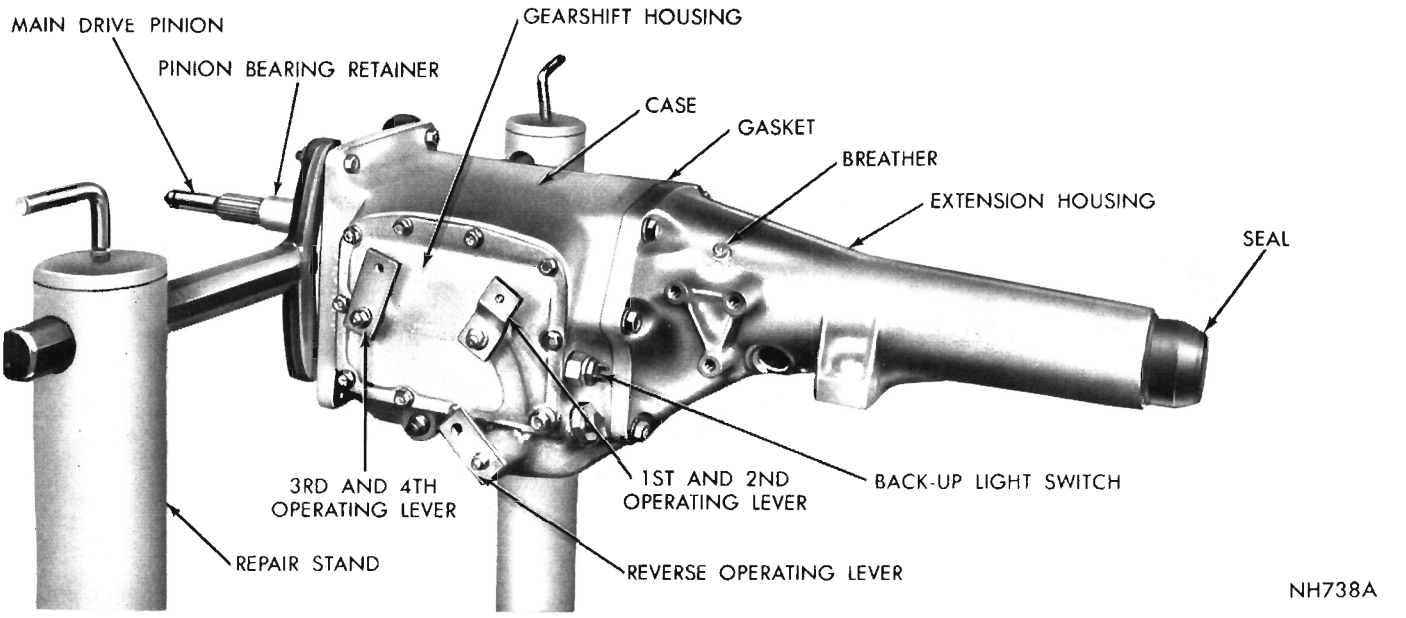

Fig. 16—A-833 Transmission in Repair Stand

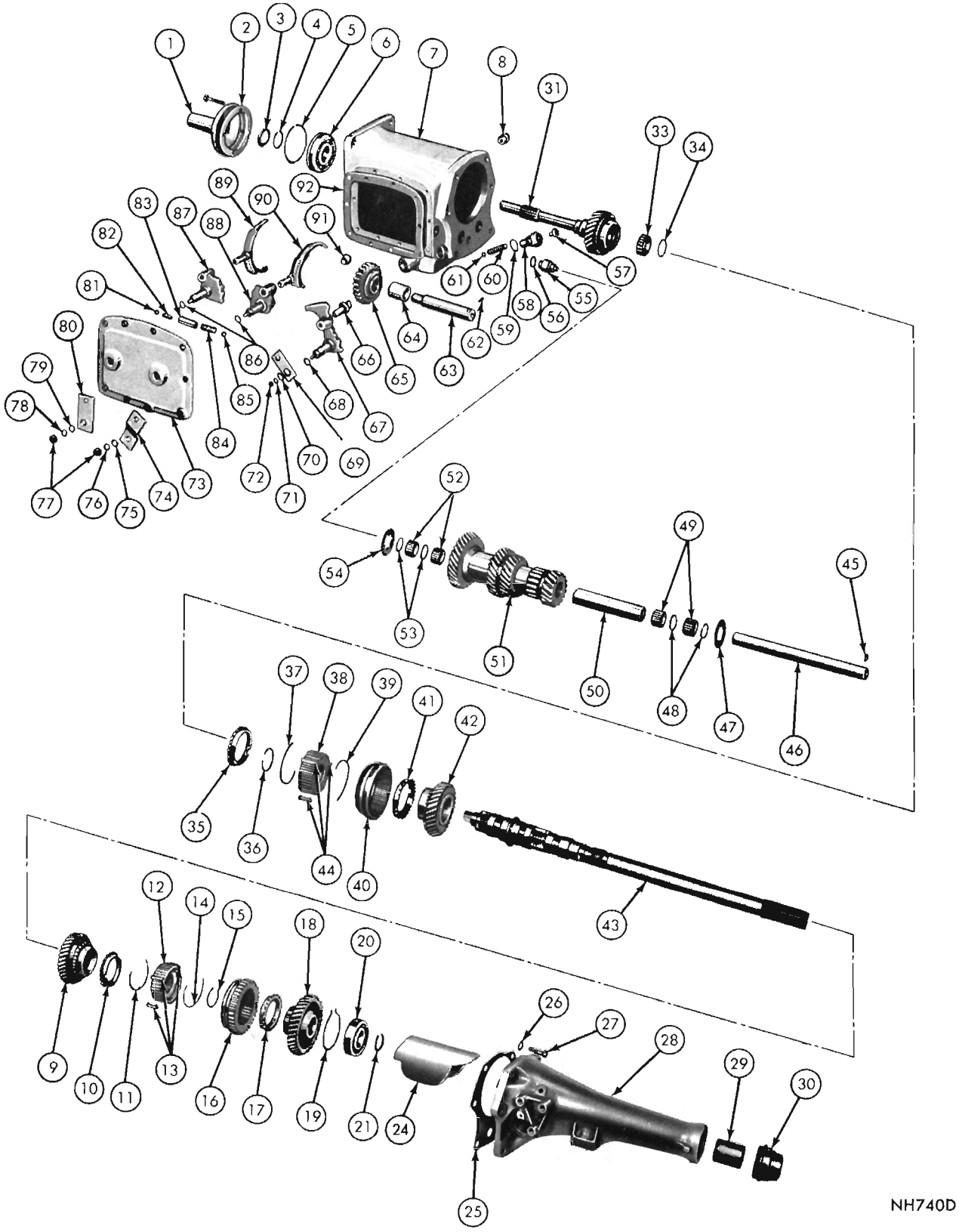

Fig. 17—A-833 Transmission Disassembled

1. Bearing Retainer
2. Bearing Retainer Gasket
3. Bearing Retainer Oil Seal
4. Snap Ring, Bearing (Inner)
5. Snap Ring, Bearing (Outer)
6. Pinion Bearing
7. Transmission Case
8. Filler Plug
9. Gear, 2nd Speed
10. Stop Ring
11. Shift Strut Springs
12. Clutch Gear
13. Shift Struts (3)
14. Shift Strut Spring
15. Snap Ring
16. 1st and 2nd Clutch Sleeve Gear
17. Stop Ring
18. 1st Speed Gear
19. Bearing Retainer Ring
20. Rear Bearing
21. Snap Ring
24. Baffle
25. Gasket, Case to Extension Housing
26. Lockwasher
27. Bolt
28. Extension Housing
29. Mainshaft Yoke Bushing
30. Oil Seal
31. Main Drive Pinion
33. Needle Bearing Rollers
34. Snap Ring
35. Stop Ring
36. Snap Ring
37. Shift Strut Spring
38. Clutch Gear
39. Shift Strut Spring
40. Clutch Sleeve
41. Stop Ring
42. 3rd Speed Gear
43. Mainshaft (Output)
44. Shift Struts (3)
45. Woodruff Key
46. Countershaft
47. Thrustwasher, Gear (1)
48. Thrustwasher, Needle Roller Bearing
49. Needle Bearing Rollers
50. Bearing Spacer
51. Countershaft Gear (Cluster)
52. Needle Bearing Rollers
53. Thrustwasher, Needle Roller Bearing
54. Thrustwasher, Gear (1)
55. Backup Light Switch
56. Backup Light Switch Gasket
57. Plug
58. Retainer, Reverse Detent Ball Spring
59. Gasket
60. Spring, Reverse Detent Ball
61. Ball, Reverse Detent
62. Woodruff Key
63. Reverse Idler Gear Shaft
64. Bushing, Reverse Idler Gear
65. Gear, Reverse Idler
66. Fork, Reverse Shifter
67. Reverse Lever
68. Oil Seal, Reverse Lever Shaft
69. Reverse Operating Lever
70. Flatwasher
71. Lockwasher
72. Nut
73. Gearshift Control Housing
74. 1st and 2nd Operating Lever
75. Flatwasher
76. Lockwasher, Lever
77. Nut, Lever
78. Lockwasher, Lever
79. Flatwasher, Lever
80. 3rd and 4th Operating Lever
81. Detent Ball
82. Detent Ball Pin
83. Detent Ball Sleeve
84. Detent Ball Spring
85. Detent Ball
86. Oil Seal (2)
87. 3rd and 4th Lever
88. 1st and 2nd Lever
89. 3rd and 4th Speed Fork
90. 1st and 2nd Speed Fork
91. Drain Plug
92. Gasket, Shift Control Housing

Legend for Fig. 17

(10) Remove bearing, bearing retainer ring, 1st speed gear, and first speed stop ring from the shaft.

(11) Remove snap ring that retains 1st and 2nd clutch sleeve gear and clutch to mainshaft (Fig. 26). Slide 1st and 2nd clutch sleeve gear and clutch from mainshaft. (Do not separate clutch sleeve gear and clutch, unless inspection reveals a replacement part is required.) Remove 2nd speed gear.

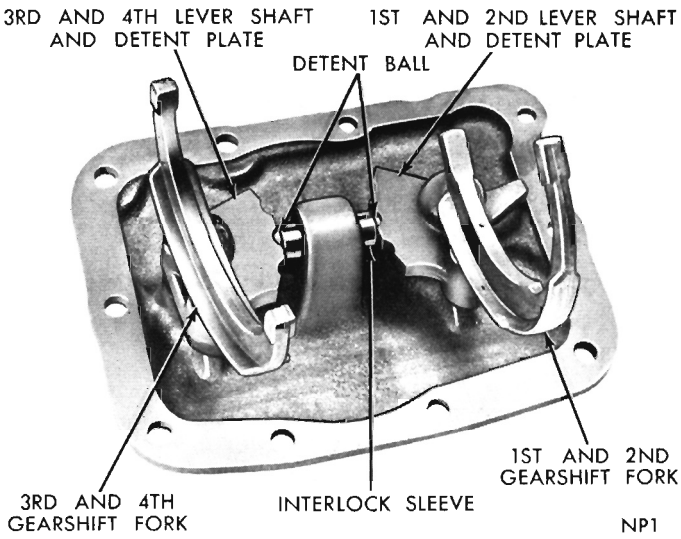

Fig. 18—Shift Housing Assembly

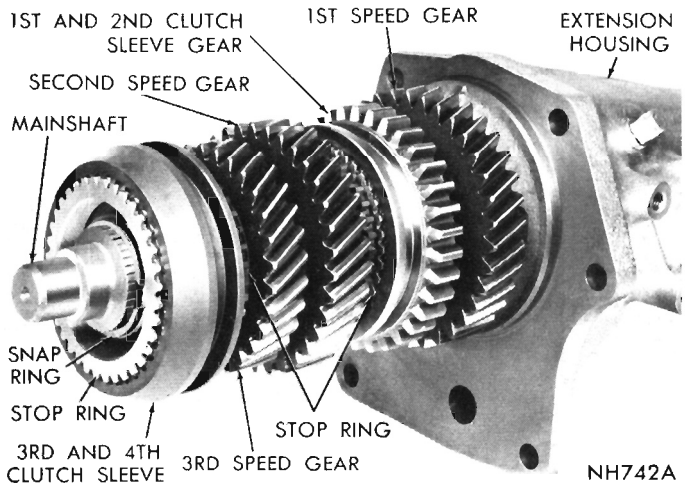

Fig. 20—Mainshaft Gear Identification

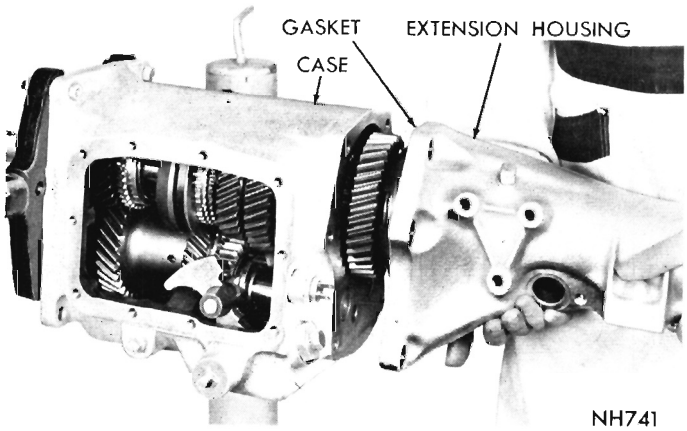

Fig. 19—Removing or Installing Extension Housing and Mainshaft Assembly

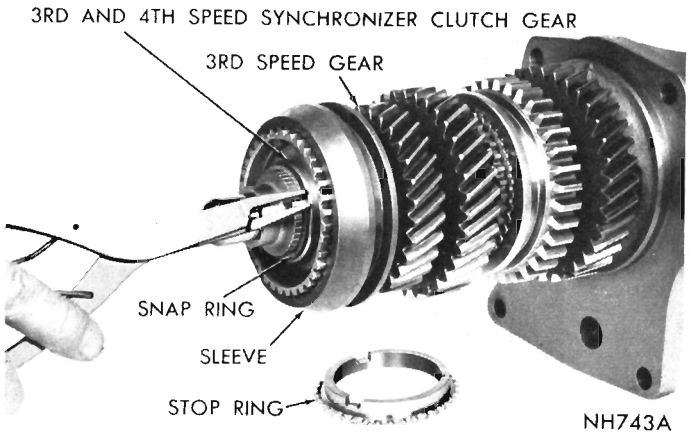

Fig. 21—Disassembling Mainshaft

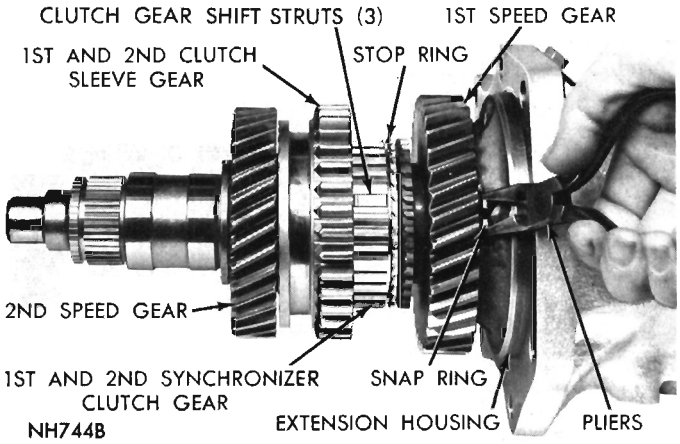

Fig. 22—Removing or Installing Mainshaft Bearing Snap Ring — Front

(Fig. 27) shows various mainshaft bearing surfaces of the gears. Inspect these surfaces for signs of wear, scoring, or any condition that would not allow shaft to be used at reassembly.

(12) Using a feeler gauge, measure end play of countershaft gear, by inserting gauge between thrust washer and gear (Fig. 28). This measurement should be .015 to .029 inch. If measurement is greater than that specified, new thrust washers must be installed at reassembly.

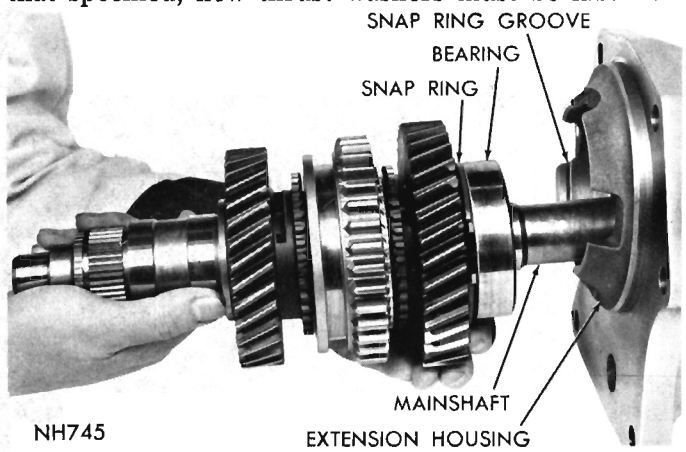

Fig. 23—Removing or Installing Mainshaft

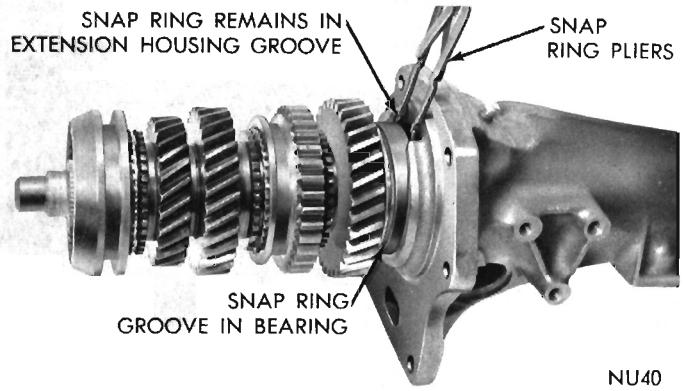

Fig. 24—Removing or Installing Mainshaft (Heavy Duty Model)

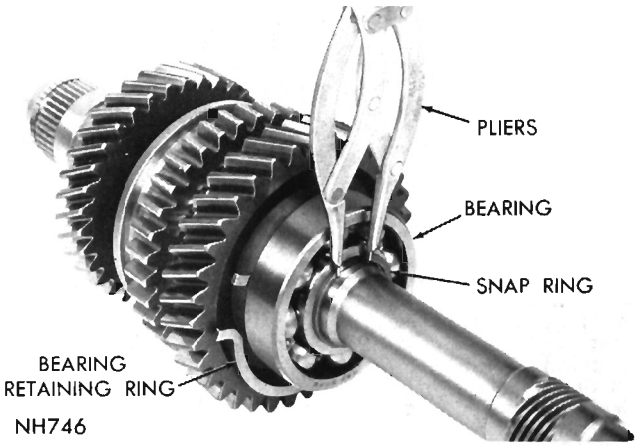

Fig. 25—Removing or Installing Mainshaft Bearing Snap Ring — Rear

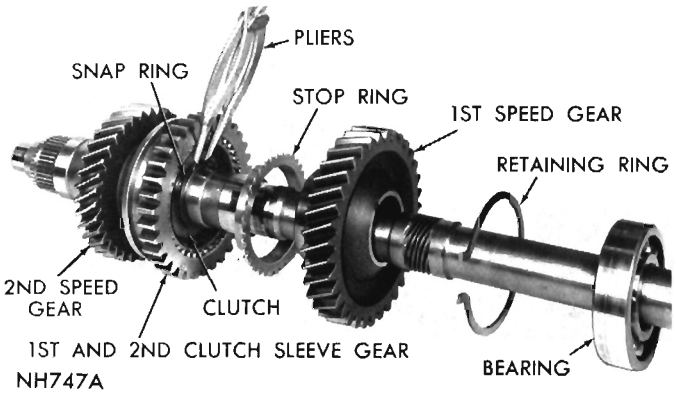

Fig. 26—Removing or Installing Clutch Gear Snap Ring

Reverse Gear, Lever and Fork

(1) Remove reverse gearshift lever detent spring retainer, gasket, plug and detent ball spring from rear of the case (Fig. 29).

(2) The reverse Idler gear shaft is a very tight fit in the case (Fig. 30). To remove, place a 7/16 socket (1/4 or 3/8 inch drive) on end of C-3638 Power Steering "Worm Shaft Seal Remover" or C-3642 "Pump Shaft Seal Remover" (Fig. 31).

Place tool in case with socket against end of shaft

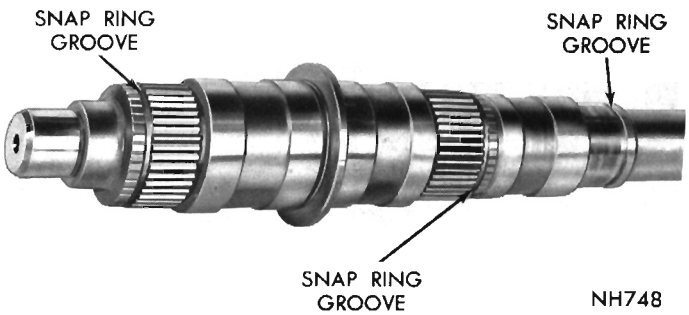

Fig. 27—Mainshaft Bearing Surfaces

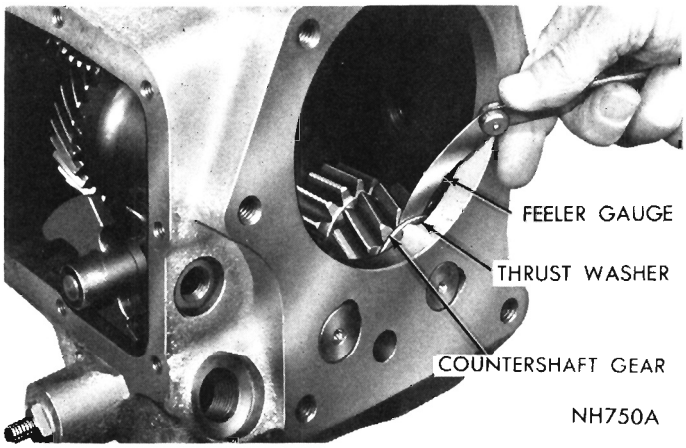

Fig. 28—Measuring Countershaft Gear End Play

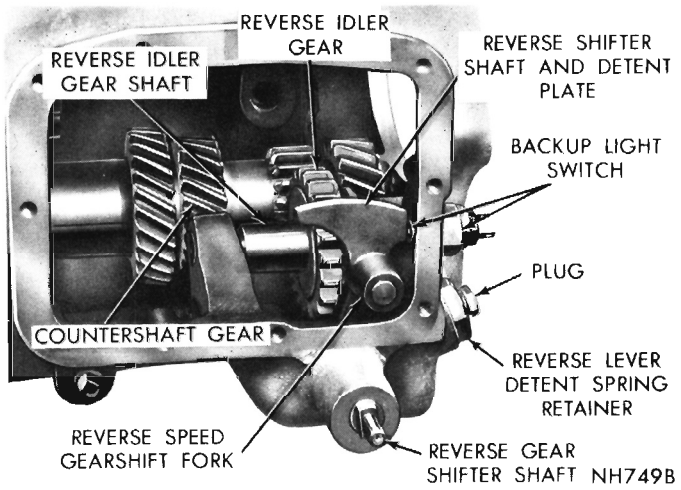

Fig. 29—Gear, Shaft and Lever Identification

and other end of tool against the case. Turn screw counterclockwise to press shaft out of the case. Remove woodruff key from shaft. In some cases, a 7/16 deep socket and/or a 3″ extension may be required to press shaft completely out of the case.

The following step need only be done if oil leakage is visible around reverse gearshift lever shaft.

(3) **Remove any burrs from shaft so as not to damage the case bore,** then carefully push reverse gearshift lever shaft inward and remove it from case (Fig. 32). Lift out detent ball from bottom of case. Remove shift fork from shaft and detent plate.

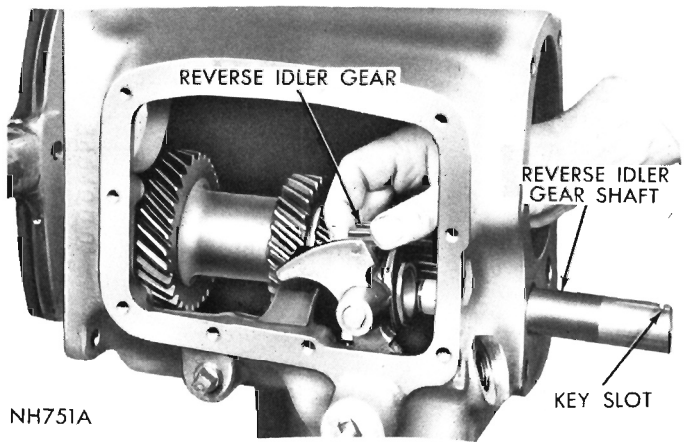

Fig. 30—Removing or Installing Reverse Idler Gear

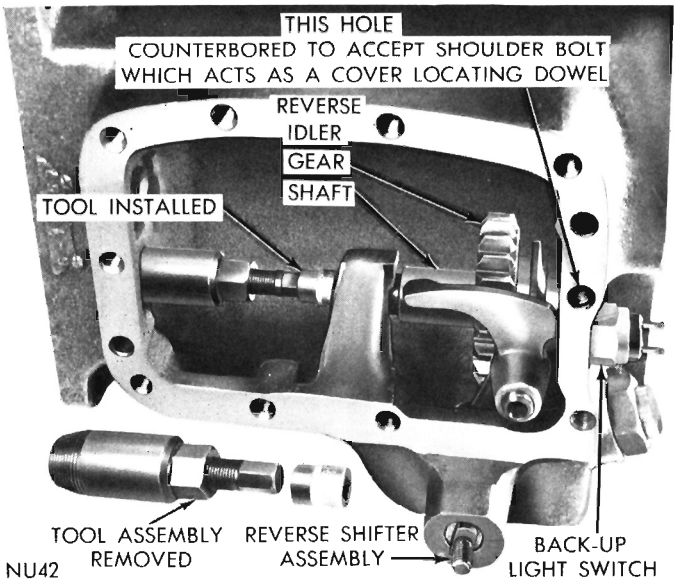

Fig. 31—Removing Reverse Idler Gear Shaft (A-833)

Drive Pinion and Countershaft Gear

(1) Using countershaft arbor C-3938, and a plastic hammer, drive countershaft out of case, allowing countershaft gear to be lowered to bottom of case. **(This will permit removal of main drive pinion.)**

(2) Remove drive pinion bearing retainer attaching bolts, then slide retainer and gasket from pinion shaft (Fig. 2). Pry pinion oil seal from bearing retainer. To avoid leakage around the new seal, do not nick or scratch the bore in which the seal is pressed, or the surface on which seal bottoms.

(3) Remove pinion bearing outer snap ring, using a plastic hammer, drive pinion into case and remove.

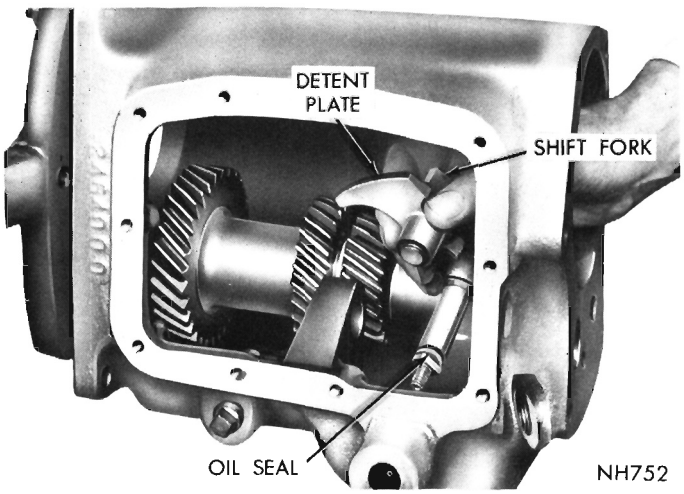

Fig. 32—Removing or Installing Reverse Shift Fork and Lever

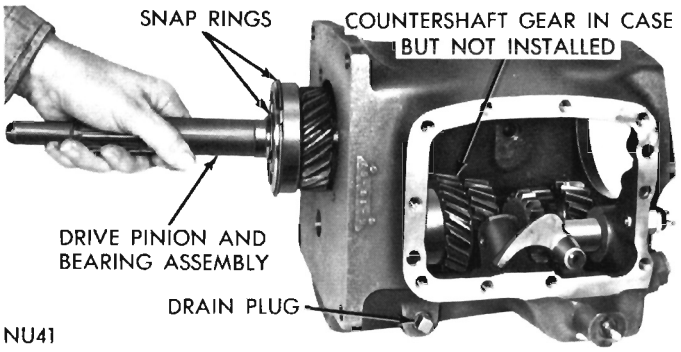

Fig. 33—Removing or Installing Drive Pinion Assy. (Heavy Duty)

HEAVY DUTY MODEL (Fig. 33) because of larger bearing can be removed through front of case.

(4) Remove pinion bearing inner snap ring. Using an arbor press, remove bearing from pinion.

(5) Remove snap ring and 16 bearing rollers from cavity in drive pinion.

(6) Remove countershaft gear from bottom of case (Fig. 34).

(7) Remove arbor and 76 needle type bearings, thrust washers and spacer, from center of countershaft gear.

CLEANING AND INSPECTION

Clean transmission case thoroughly, using a suitable solvent, dry with compressed air. Inspect case for cracks, stripped threads in various bolt holes and machined mating surfaces for burrs, nicks or any condition that would render the case unfit for further service. The front mating surface should be smooth; if any burrs are present, dress them off with a fine mill file. If threads are stripped, install Helicoil inserts.

Ball Bearings

Wash ball bearings, using a clean solvent and blow dry with compressed air.

CAUTION: Do not spin bearings with air pressure; turn slowly by hand. Spinning unlubricated bearings may cause damage to races and balls.

Be sure ball bearings are clean, then lubricate them with light grade engine oil. Inspect bearings for roughness. This can best be determined by slowly turning outer race by hand. Measure fit of bearings on their respective shafts.

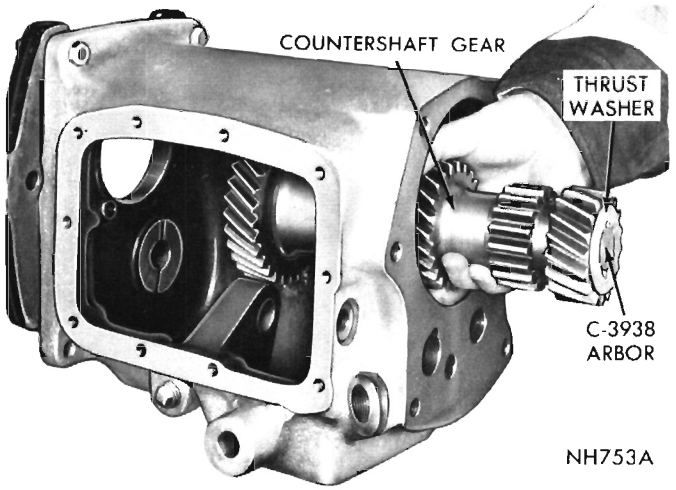

Fig. 34—Removing or Installing Countershaft Gear and Arbor

Needle Type Bearing Rollers and Spacers

Inspect all bearing rollers for flat spots or brinelling. Inspect all bearing roller spacers for signs of wear or galling. Install new parts as required.

Gears

Inspect gear teeth on synchronizer clutch gears and stop rings. If there is evidence of chipping or excessively worn teeth, install new parts at reassembly. Be sure clutch sleeve slides easily on the clutch gear. Inspect countershaft gear and all gear teeth for chipped or broken teeth, or showing signs of excessive wear. Small nicks or burrs must be stoned off.

Inspect teeth on main drive pinion. If excessively worn, broken or chipped, a new pinion should be installed. If the oil seal contact area on drive pinion shaft is pitted, rusted or scratched, a new pinion is recommended for best seal life.

Test interlock sleeve and pin for free movement in bore of shift housing. Examine detent balls for signs of brinelling. If lever detents show signs of excessive wear to extent of not locking in gear, install a new part. Inspect shift forks for wear on the shanks and pads.

Synchronizer Stop Rings

Inspect stop rings for cracks at corners of shift plate indexing slots. If rings are cracked or show signs of extreme wear on threaded bore, install new rings at reassembly. Test new rings for good fit on gear cones with minimum wobble.

Mainshaft

Inspect mainshaft gear and bearing mating surfaces. If gear contact surfaces show signs of galling or are excessively worn, a new mainshaft should be installed.

Inspect snap ring grooves for burred edges. If rough or burred, remove condition using a fine file or crocus cloth. Inspect synchronizer clutch gear splines on shaft for burrs.

ASSEMBLING TRANSMISSION

The Grease recommended for use during reassembly procedures is Automotive Multi-Purpose Grease,

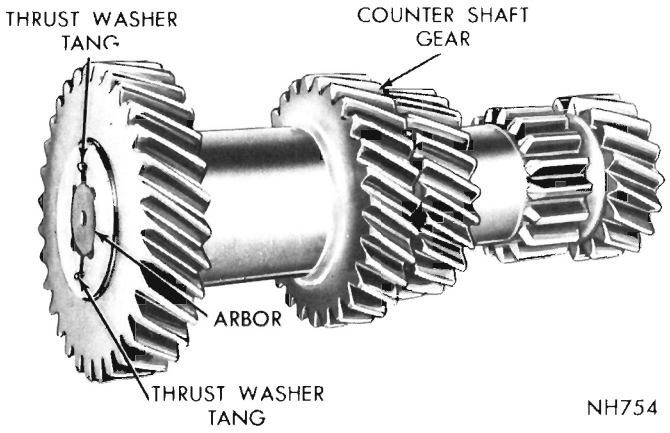

Fig. 35—Countershaft Gear and Arbor Assembly

NLGI grade 2 E.P. or Multi-Mileage Lubricant, Part Number 2525035.

Countershaft Gear and Drive Pinion

(1) Using heavy grease, coat inside bore of gear at each end, then install roller bearing spacer. Insert arbor Tool C-3938, into gear and through spacer. Center spacer and arbor.

(2) Coat needle type roller bearings with heavy grease, then at each end of gear, install 19 rollers, followed by a spacer ring and 19 more roller bearings and 1 spacer ring (Fig. 17).

(3) If countershaft gear end play exceeded .029" when measured during disassembly (Fig. 28), install new thrust washers. Coat thrust washers with heavy grease and install them over arbor with tang side toward the case boss (Fig. 35).

(4) Install countershaft gear assembly into the case (Fig. 34). Allow gear assembly to rest on bottom of case. (Be sure thrustwashers stay in position.)

(5) Press main drive pinion bearing on pinion shaft. Be sure outer snap ring groove is toward front (Fig. 36). Seat bearing fully against shoulder on gear.

(6) Install a new inner snap ring on shaft to retain bearing. Be sure snap ring is seated. This snap ring is a select fit for minimum end play (Fig. 33).

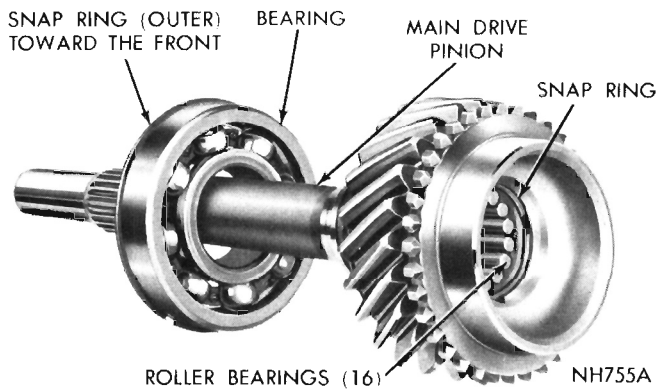

Fig. 36—Main Drive Pinion and Bearing Assembly

(7) Place pinion shaft in a vise (with soft jaws), then install 16 bearing rollers in cavity of shaft. Coat bearing rollers with heavy grease, then install bearing retaining snap ring in its groove.

(8) Install drive pinion and bearing through rear of case and position in front bore. Tap lightly into place, using a plastic hammer. Install outer snap ring in bearing groove. **HEAVY DUTY MODEL** (Fig. 33) because of larger bearing can be installed through front of case.

(9) Using Tool C-3789 or C-3801 for heavy duty model (Fig. 37), install a new oil seal in retainer bore. Install main drive pinion bearing retainer and gasket. Coat threads with sealing compound, then install attaching bolts and tighten to 30 foot-pounds (Fig. 2).

(10) Start countershaft in its bore at rear of case. Raise countershaft gear until teeth mesh with main drive pinion gear. (Be sure thrust washers remain in position on ends of arbor and tangs aligned with slots in the case.)

(11) Align countershaft arbor with bores in case, then drive countershaft into the gear. Install the woodruff key. Continue to drive shaft into case until end of shaft is flush with rear face of the case. Remove arbor Tool C-3938.

Reverse Gear, Lever and Fork

The following step need only be done if the reverse shaft was removed because of oil leak.

(1) Install a new oil seal "O" ring on reverse gearshift lever shaft. Coat lever shaft with Multi-purpose grease, then carefully install lever shaft into bore in the case (Fig. 32). Install reverse fork in the lever.

(2) Install reverse detent spring retainer and gasket. Torque to 50 foot-pounds. Insert ball and spring. Install plug and gasket. Torque to 24 foot-pounds.

(3) Place reverse Idler gearshaft in position in end of case, and drive it in far enough to position reverse Idler gear on protruding end of shaft with shift slot toward rear (Fig. 30). At same time, engage slot with reverse shift fork.

(4) With reverse Idler gear correctly positioned, drive reverse gear shaft into case far enough to install woodruff key. Drive in shaft, flush with end of case (Fig. 30).

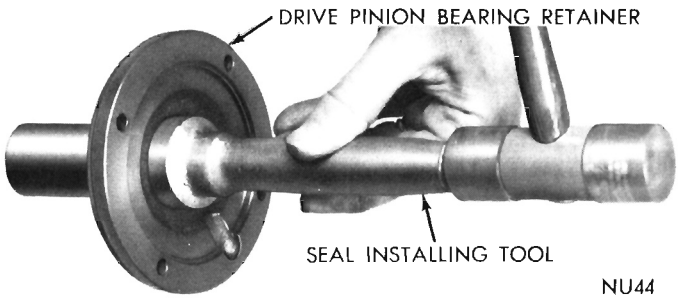

Fig. 37—Replacing Seal in Drive Pinion Bearng Retainer

(5) Install back-up light switch and gasket. Torque to 15 foot-pounds.

Extension Housing Bushing Replacement

(1) Remove extension housing yoke seal (Fig. 11) with Tool C-3985.

(2) Drive the bushing out of housing (Fig. 38) with Tool C-3974.

(3) Sliding a new bushing on installing end of Tool C-3974. Align oil hole in bushing with oil slot in housing, then drive bushing into place (Fig. 38).

(4) To install a new seal, position seal in opening of extension housing and drive it into housing with Tool C-3972 (Fig. 12).

MAINSHAFT

(1) Slide second speed gear over mainshaft (synchronizer cone toward rear) and down against shoulder on shaft (Fig. 26).

(2) Slide first and second clutch sleeve gear assembly including 2nd gear stop ring over mainshaft (with shift fork slot toward front) and against second speed gear. (Be sure stop ring is indexed with shift struts.) Install a new snap ring to secure (Fig. 26).

(3) Slide low gear stop ring over shaft, position and index with shift struts.

(4) Slide first speed gear (synchronizer cone toward clutch sleeve gear just installed) over mainshaft into position against clutch sleeve gear.

(5) Install mainshaft bearing retaining ring, followed by mainshaft rear bearing. Using an arbor and a suitable tool, drive or press bearing down into position. Install a new snap ring on shaft to secure (Fig. 25). This snap ring is a select fit for minimum end play.

(6) Install partially assembled mainshaft into extension housing far enough to engage bearing retaining ring in slot in extension housing (Fig. 23). Now compress ring with pliers so that mainshaft ball bearing can move in to bottom against its thrust shoulder in extension housing. Release ring and seat it all around its groove in extension housing (Fig. 22).

HEAVY DUTY MODEL (Fig. 24). Install mainshaft assembly into extension housing until bearing touches snap ring in housing groove. Then expand ring with pliers so that mainshaft ball bearing can slide in against shoulder in extension housing. Release snap ring and see that it seats in bearing groove.

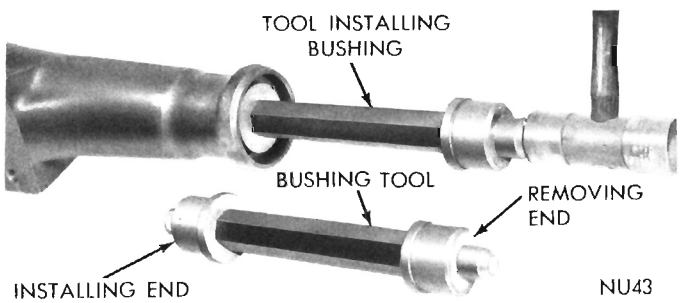

Fig. 38—Replacing Bushing in Extension Housing

(7) Slide third speed gear over mainshaft (with synchronizer cone toward front) followed by third gear stop ring (Fig. 21).

(8) Install third and fourth speed synchronizer clutch gear assembly (including sleeve, shift struts and springs) on mainshaft (shift fork slot toward rear) against third speed gear (Fig. 21). Be sure to index rear stop ring with clutch gear shift struts.

(9) Install retaining snap ring (Fig. 21). Then, using heavy grease, position front stop ring over clutch gear, again indexing ring slots with shift struts. **CAUTION: It is very important that indexing of all stop rings and positioning of gears and clutches on mainshaft be correct, or mating of extension housing to the case will not be possible without damage.**

(10) Coat a new extension housing to case gasket with grease (both sides) then place in position on the case.

(11) To provide clearance so that assembly will be possible, slide reverse idler gear to center of its shaft and move the 3rd and 4th sychronizer sleeve as far forward as practical (do not lose struts). Now slowly insert mainshaft assembly into case (Fig. 19) tilting it as required to clear idler and cluster gears and finally entering the pilot rollers in the drive pinion gear. If everything is in proper position the extension housing will bottom to the case gasket without force. If not, check to see if a strut, pinion roller, or stop ring is out of position.

(12) Install extension housing bolts and tighten to 50 foot-pounds.

Gearshift Housing and Mechanism

The following 4 steps need only be done if gearshift housing was disassembled previously because of leaking seals.

(1) Slide interlock sleeve into position in housing (Fig. 18). Install a new oil seal "O" ring on each lever shaft. Coat one of the shafts with Multi-purpose grease, then carefully install shaft in shift housing. Fill recess around shaft with Multi-purpose grease, then install operating lever (Fig. 17). Install a flatwasher, lock-washer and nut. Tighten nut to 18 foot-pounds.

(2) Place a detent ball in the sleeve, followed by spring and interlock pin. Coat other lever shaft with Multi-purpose grease and start shaft into housing. Place remaining detent ball on the spring and compress ball and spring with a small screwdriver, then push shaft in until seated. Fill recess next to shaft with Multi-purpose grease, then install operating lever, flatwasher, lockwasher and nut. Tighten nut to 18 foot-pounds.

(3) Position 1st-2nd and 3rd-4th clutch sleeve gears in neutral. Install gearshift forks in grooves in clutch sleeve gears. Position gasket and as shift housing is installed, align shift fork shafts with holes in levers (Fig. 18). Install retaining bolts finger tight.

(4) Eight of the shift housing retaining bolts are shoulder bolts for accurately locating the mechanism on the transmission. One bolt shoulder is longer and acts as a dowel, passing through the cover and into the transmission case at center of rear flange (Fig. 31). Two bolts are standard, located at lower rear of cover. Tighten all bolts evenly to 15 foot-pounds.

The reverse shift lever and 1-2 shift lever have cam surfaces which mate in reverse position (Fig. 39) to lock the 1-2 lever, fork and synchronizer in neutral position. Test for correct action by placing transmission in reverse. Then, while turning input shaft, move 1-2 lever in each direction. If input shaft locks or becomes harder to turn, the synchronizer is partly engaging caused by too much cam clearance. Select new 1-2 shift lever, size "A" or "B" as required (Fig. 39). If too little cam clearance exists it will be difficult or impossible to shift to reverse.

(5) Grease reverse shaft and install operating lever, flatwasher, lockwasher and nut. Tighten to 18 foot-pounds (Fig. 16).

(6) Install speedometer drive pinion gear and adapter being sure range number, representing number of teeth on gear, is in 6 o'clock position (Fig. 8).

TRANSMISSION INSTALLATION

Place a small amount of Multi-Purpose lubricant around inner end of pinion shaft pilot bushing in flywheel and on pinion bearing retainer release bearing sleeve area. **Do not lubricate end of pinion shaft, clutch disc splines or clutch release levers.**

(1) With transmission on a suitable jack, slide assembly under vehicle.

(2) Raise transmission until drive pinion is centered in clutch housing bore.

(3) Roll transmission slowly forward until pinion shaft enters clutch disc. Turn pinion shaft until splines are aligned, then work transmission forward until seated against clutch housing. **Do not allow transmission to "hang" after pinion shaft has entered the clutch disc.**

(4) Install transmission to clutch housing bolts and tighten to 50 foot-pounds.

(5) Using a pointed drift, align crossmember bolt holes, then install attaching bolts. Tighten to 90 foot-pounds (Fig. 13, 14 or 15).

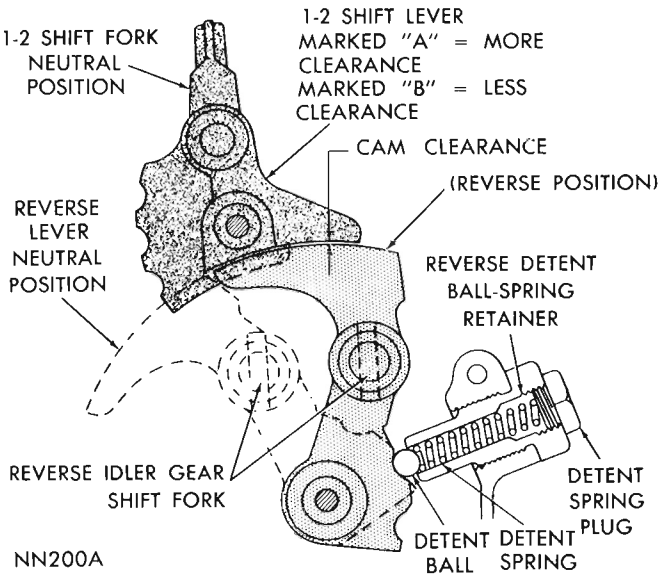

Fig. 39—Reverse Interlock

(6) Remove engine support fixture and disengage hooks from holes in the frame side rails. Install extension housing to rear engine mount bolts and tighten to 40 foot-pounds. **FURY MODELS ONLY** (Fig. 15). Engine mount to center crossmember bolt and nut, loose assembled to this point, should now be torqued to 75 foot-pounds.

(7) Fasten shift unit to extension housing mounting plate with two bolts and lock washers and tighten to 30 foot-pounds (Fig. 3). Referring to "Gearshift Linkage Adjustment", connect shift control rods to transmission levers and connect speedometer cable.

(8) Carefully guide front universal joint yoke into extension housing and onto mainshaft splines. Connect propeller shaft to rear axle pinion yoke.

(9) Reconnect exhaust pipes (if removed). Tighten bolts securely.

(10) Fill transmission with Multi-Purpose Gear Oil SAE 140. If shift effort becomes extremely high during cold weather, Multi-Purpose Gear Oil SAE 80 or 90 should be used. Automatic Transmission Fluid AQ-ATF Suffix "A" (Dexron) may also be used in extremely cold climates.

(11) Lower vehicle, install gearshift lever and console, refer to "FOUR SPEED GEARSHIFT."

(12) Road test vehicle to make sure transmission shifts smoothly and operates quietly.

TORQUEFLITE TRANSMISSIONS

(A-904 and A-727)

INDEX

	Page
General Information	30
Hydraulic Control System	33
Operating Instructions	42
Service Diagnosis	43
Service in Vehicle	
Air Pressure Tests	59
Aluminum Thread Repair	49
Band Adjustments	52
Console Gearshift	50
Extension Housing and Output Shaft Bearing	60
Extension Housing Yoke Seal	60
Gearshift Linkage Adjustment	50
Governor	61
Hydraulic Control Pressure Adjustments	58
Hydraulic Control Pressure Tests	57
Lubrication	49
Neutral Starting Switch	52
Parking Lock Components	62
Speedometer Pinion	60
Throttle Linkage Adjustment	52
Valve Body and Accumulator Piston	63
Service Out of Vehicle	
Assembly—Sub-Assembly Installation	89
Disassembly—Sub-Assembly Removal	67
Installation—Transmission, Converter and Drive Plate	92
Fluid Leakage	66
Recondition Sub-Assemblies	69
Accumulator Piston and Spring	73
Extension Housing Bushing and Oil Seal	73
Front Clutch—A-904	77
Front Clutch—A-727	79
Governor and Support	73
Kickdown Servo and Band	88
Low-Reverse Servo and Band	89
Oil Pump and Reaction Shaft Support —A-904	73
Oil Pump and Reaction Shaft Support —A-727	75
Overrunning Clutch	87
Parking Lock Sprag	73
Planetary Gear Train—A-904	84
Planetary Gear Train—A-727	85
Rear Clutch—A-904	81
Rear Clutch—A-727	83
Valve Body Assembly	69
Removal—Transmission and Converter	63
Pump Oil Seal	66
Starter Ring Gear	64
Torque Converter Flushing	65
Specifications	96
Tightening Reference	98

GENERAL INFORMATION

The TorqueFlite Transmission model identification marking shown in the following application chart, is cast in raised letters about 3/8 inch high on the lower left side of the bell housing. Transmission usage is determined by the type of engine with which it is installed.

TRANSMISSION APPLICATION CHART

Engine Type	Displacement Cubic Inch	Identification Marking
6 Cyl.	170-225	A-904-G
8 Cyl.	273	A-904-A
8 Cyl.	318	A-904-LA
6 Cyl.	225	A-727-RG
8 Cyl.	318-340	A-727-A
8 Cyl.	383-426-440	A-727-B

The A-727-RG is available for heavy duty police and taxi service with the 6 Cyl., 225 Cu. In. engine.

Because of the similarity in design and in servicing the transmissions, the procedures have been combined in this Manual. Where variations in procedures occur, application is indicated.

CAUTION: Transmission operation requirements are different for each vehicle and engine combination and some internal parts will be different to provide for this. Therefore, when replacing parts, refer to the seven digit part number stamped on left side of the transmission oil pan flange.

The transmission combines a torque converter and a fully-automatic 3-speed gear system (Figs. 1 and 2). The converter housing and transmission case are an integral aluminum casting. The transmission consists of two multiple disc clutches, an over-running clutch, two servos and bands, and two planetary gear sets to provide three forward ratios and a reverse ratio. The common sun gear of the planetary gear sets is connected to the front clutch by a driving shell which is splined to the sun gear and to the front clutch retainer. The hydraulic system consists of an oil pump, and a single valve body which contains all of the valves except the governor valve.

Venting of the transmission is accomplished by a drilled passage through the upper part of the oil pump housing.

The torque converter is attached to the crankshaft through a flexible driving plate. Cooling of the converter is accomplished by circulating the transmission fluid through an oil-to-water type cooler, located in

CLUTCH ENGAGEMENT AND BAND APPLICATION CHART

Lever Position Drive-Ratio	Front Clutch	Rear Clutch	Front (Kickdown) Band	Rear (Low-Rev) Band	Overrunning Clutch
N-NEUTRAL	DISENGAGED	DISENGAGED	RELEASED	RELEASED	NO MOVEMENT
D-DRIVE (Breakaway) 2.45 to 1	DISENGAGED	ENGAGED	RELEASED	RELEASED	HOLDS
(Second) 1.45 to 1	DISENGAGED	ENGAGED	APPLIED	RELEASED	OVER RUNS
(Direct) 1.00 to 1	ENGAGED	ENGAGED	RELEASED	RELEASED	OVER RUNS
KICKDOWN (To Second) 1.45 to 1	DISENGAGED	ENGAGED	APPLIED	RELEASED	OVER RUNS
(To Low) 2.45 to 1	DISENGAGED	ENGAGED	RELEASED	RELEASED	HOLDS
2-SECOND 1.45 to 1	DISENGAGED	ENGAGED	APPLIED	RELEASED	OVER RUNS
1-LOW 2.45 to 1	DISENGAGED	ENGAGED	RELEASED	APPLIED	PARTIAL HOLD
R-REVERSE 2.20 to 1	ENGAGED	DISENGAGED	RELEASED	APPLIED	NO MOVEMENT

the radiator lower tank. The torque converter assembly is a sealed unit which cannot be disassembled.

The transmission fluid is filtered by an internal "Dacron Type" filter attached to the lower side of the valve body assembly.

Engine torque is transmitted to the torque converter then, through the input shaft to the multiple discs clutches in the transmission. The power flow depends on the application of the clutches and bands. Refer to "Clutch Engagement and Band Application Chart."

HYDRAULIC CONTROL SYSTEM

The hydraulic control circuits on pages 32 through 39 show the position of the various valves with color coded passages to indicate those under hydraulic pressure for all operations of the transmission.

The hydraulic control system makes the transmission fully automatic, and has four important functions to perform. In a general way, the components of any automatic control system may be grouped into the following basic groups:

The pressure supply system, the pressure regulating valves, the flow control valves, and the clutches and band servos.

Taking each of these basic groups or systems in turn, the control system may be described as follows:

Pressure Supply System

The pressure supply system consists of an oil pump driven by the engine through the torque converter. The single front pump furnishes pressure for all the hydraulic and lubrication requirements.

Pressure Regulating Valves

The pressure regulating valves consist of a regulator valve which controls line pressure at a value dependent on throttle opening.

The torque converter control valve maintains torque converter operating pressure and transmission lubricating pressure.

The governor valve transmits regulated pressure to the transmission (in conjunction with throttle pressure) to control upshift and downshift speeds.

The throttle valve transmits regulated pressure to the transmission (in conjunction with governor pressure) to control upshift and downshift speeds.

Flow Control Valves

The manual valve obtains the different transmission drive ranges as selected by the vehicle operator.

The 1-2 shift valve automatically shifts the transmission from low to second or from second to low depending on the vehicle operation.

The 2-3 shift valve automatically shifts the transmission from second to direct or from direct to second depending on the vehicle operation.

The kickdown valve makes possible a forced downshift from direct to second-second to breakaway or direct to breakaway (depending on vehicle speed) by

depressing the accelerator pedal past the detent "feel" near wide open throttle.

6-Cylinder Engines: (Fig. 3) The throttle pressure plug at the end of the 2-3 shift valve, provides a 3-2 downshift with varying throttle openings depending upon vehicle speed. Approximately 1/3 throttle at 10 to 20 mph, and 3/4 throttle at the upper limit speed range—40 mph.

The shuttle valve has two separate functions and performs each independently of each other. The first is that of providing fast release of the kickdown band, and smooth front clutch engagement when the driver makes a "lift-foot" upshift from second to direct. The second function of the shuttle valve is to regulate the application of the kickdown servo and band when making direct to second kickdowns.

Clutches, Band Servos and Accumulator

The front and rear clutch pistons, and both servo pistons are moved hydraulically to engage the clutches and apply the bands. The pistons are released by spring tension when hydraulic pressure is released. On the 2-3 upshift, the kickdown servo piston is released by spring tension and hydraulic pressure.

The accumulator controls the hydraulic pressure on the apply side of the kickdown servo during the 1-2 shift; thereby, cushioning the kickdown band application at any throttle position.

OPERATING INSTRUCTIONS

The transmission will automatically upshift and downshift at approximately the speeds shown in the "Shift Pattern Summary Chart." **All shift speeds given in the "Chart" may vary somewhat due to production tolerances and rear axle ratios. The quality of the shifts is very important. All shifts should be smooth, responsive, and with no noticeable engine runaway.**

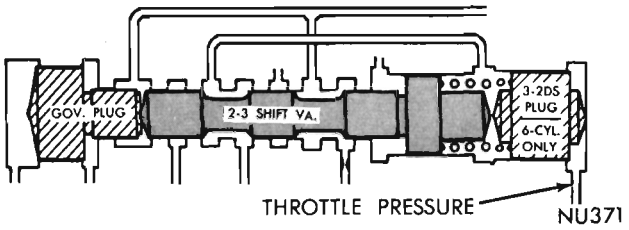

Fig. 3—Part Throttle Downshift Hydraulic Circuit

Gearshift and Parking Lock Controls

The transmission is controlled by a "lever type" gearshift incorporated within the steering column. The control has six selector lever positions: P (park), R (reverse), N (neutral), D (drive), 2 (second) and 1 (low). Some vehicles are equipped with a "lever type" console gearshift which has the same selector lever positions. The parking lock is applied by moving the selector lever past a gate to the P position.

CAUTION: Never apply the parking lock until the vehicle has stopped; otherwise, a severe ratcheting noise will occur.

Starting the Engine

The engine will start with the selector lever in either the P (park) or N (neutral) positions.

(1) As a safety precaution when starting in the N (neutral) position, apply the parking or foot brake.

(2) Depress the accelerator pedal one-third of travel to insure proper choke operation.

(3) Turn the ignition key all the way to the right to START position. When the engine starts, release the key and it will return to the ON position. **The TorqueFlite transmission will not permit starting the engine by pushing or towing.**

Mountain Driving

When driving in the mountains with either heavy loads or when pulling trailers, the 2 (second) or 1 (low) position should be selected on upgrades which

SHIFT PATTERN SUMMARY CHART

(Six Cylinder Vehicles)

Condition	Vehicle Speed To Axle Ratios				
	170 Cu. In. Eng.		225 Cu. In. Eng.		
	2.76:1	3.23:1	2.76:1	2.93:1	3.23:1
Closed Throttle 1-2 Upshift	7-13	6-11	7-13	7-13	7-13
Closed Throttle 2-3 Upshift	12-17	10-15	12-18	11-17	11-16
Wide Open Throttle 1-2 Upshift	29-46	25-39	29-42	29-40	27-38
Wide Open Throttle 2-3 Upshift	68-80	58-68	62-76	62-73	58-69
3-2 Kickdown Limit	59-71	50-61	53-68	53-65	50-61
3-1 Kickdown Limit	26-30	23-26	27-31	26-30	25-28
Closed Throttle Downshift	5-12	4-10	5-12	5-12	5-11

SHIFT PATTERN SUMMARY CHART

(Eight Cylinder Vehicles)

Condition	Vehicle Speed To Axle Ratios						
	273 & 318 Cu. In. Eng.		340, 383 & 440 Cu. In. Eng.			High Performance 426	440
	2.76:1	3.23:1	2.76:1	3.23:1	3.55:1	3.23:1	3.23:1
Closed Throttle 1-2 Upshift	7-13	6-11	8-14	6-13	6-10	8-15	7-12
Closed Throttle 2-3 Upshift	12-18	10-15	13-18	11-17	10-14	13-19	11-16
Wide Open Throttle 1-2 Upshift	30-47	25-40	31-49	31-50	28-42	41-58	33-48
Wide Open Throttle 2-3 Upshift	70-82	59-71	72-85	62-81	57-67	80-93	68-78
3-2 Kickdown Limit	60-73	51-63	63-76	55-73	50-60	70-84	60-70
3-1 Kickdown Limit	27-31	23-27	28-32	23-36	22-35	30-45	25-36
Closed Throttle Downshift	5-12	5-10	6-13	5-12	4-9	6-13	5-11

require heavy throttle for 1/2 mile or more. This reduces possibility of overheating the transmission and converter under these conditions.

Towing Vehicle

Transmission Inoperative: Tow the vehicle with a rear end pickup or remove the propeller shaft.

Transmission Operating Properly: The vehicle may be towed safely in N (neutral) with rear wheels on the ground at a speed not to exceed 30 mph. **If the vehicle is to be towed for extended distances, it should be done with a rear end pickup or the propeller shaft removed.** Because the transmission receives lubrication only when the engine is running, **it is good practice to always tow a disabled vehicle with a rear end pickup** or remove the propeller shaft.

SERVICE DIAGNOSIS

The transmission should not be removed nor disassembled until a careful diagnosis is made, the definite cause determined and all possible external corrections performed. In diagnosing any abnormal shift condition, always make the hydraulic pressure tests before disassembly or replacement of parts.

Condition	Possible Cause	Correction
HARSH ENGAGEMENT IN D, 1, 2 AND R	(a) Engine idle speed too high.	(a) Adjust engine idle speed to specifications. Readjust throttle linkage.
	(b) Hydraulic pressures too high or low.	(b) Inspect fluid level, then perform hydraulic pressure tests and adjust to specifications.
	(c) Low-reverse band out of adjustment.	(c) Adjust low-reverse band.
	(d) Valve body malfunction or leakage.	(d) Perform pressure tests to determine cause and correct as required.
	(e) Accumulator sticking, broken rings or spring.	(e) Inspect accumulator for sticking, broken rings or spring. Repair as required.
	(f) Low-reverse servo, band or linkage malfunction.	(f) Inspect servo for damaged seals, binding linkage or faulty band lining. Repair as required.
	(g) Worn or faulty front and/or rear clutch.	(g) Disassemble and inspect clutch. Repair or replace as required.
DELAYED ENGAGEMENT IN D, 1, 2 AND R	(a) Low fluid level.	(a) Refill to correct level with Automatic Transmission Fluid, AQ-ATF, Suffix A. or (Dexron).
	(b) Incorrect gearshift control linkage adjustment.	(b) Adjust control linkage.
	(c) Hydraulic pressures too high or low.	(c) Perform hydraulic pressure tests and adjust to specifications.
	(d) Oil filter clogged.	(d) Replace oil filter.
	(e) Valve body malfunction or leakage.	(e) Perform pressure tests to determine cause and correct as required.
	(f) Accumulator sticking, broken rings or spring.	(f) Inspect accumulator for sticking, broken rings or spring. Repair as required.

Condition	Possible Cause	Correction
	(g) Clutches or servos sticking or not operating.	(g) Remove valve body assembly and perform air pressure tests. Repair as required.
	(h) Faulty oil pump.	(h) Perform hydraulic pressure tests. Adjust or repair as required.
	(i) Worn or faulty front and/or rear clutch.	(i) Disassemble and inspect clutch. Repair or replace as required.
	(j) Worn or broken input shaft and/or reaction shaft support seal rings.	(j) Inspect and replace seal rings as required, also inspect respective bores for wear. Replace parts as required.
	(k) Aerated fluid.	(k) Inspect for air leakage into pump suction passages.
RUNAWAY OR HARSH UPSHIFT AND 3-2 KICKDOWN	(a) Low fluid level.	(a) Refill to correct level with Automatic Transmission Fluid, AQ-ATF, Suffix A. or (Dexron).
	(b) Incorrect throttle linkage adjustment.	(b) Adjust throttle linkage.
	(c) Hydraulic pressures too high or low.	(c) Perform hydraulic pressure tests and adjust to specifications.
	(d) Kickdown band out of adjustment.	(d) Adjust kickdown band.
	(e) Valve body malfunction or leakage.	(e) Perform pressure tests to determine cause and correct as required.
	(f) Governor malfunction.	(f) Inspect governor and repair as required.
	(g) Accumulator sticking, broken rings or spring.	(g) Inspect accumulator for sticking, broken rings or spring. Repair as required.
	(h) Clutches or servos sticking or not operating.	(h) Remove valve body assembly and perform air pressure tests. Repair as required.
	(i) Kickdown servo, band or linkage malfunctions.	(i) Inspect servo for sticking, broken seal rings, binding linkage or faulty band lining. Repair as required.
	(j) Worn or faulty front clutch.	(j) Disassemble and inspect clutch. Repair or replace as required.
	(k) Worn or broken input shaft and/or reaction shaft support seal rings.	(k) Inspect and replace seal rings as required, also inspect respective bores for wear. Replace parts as required.
NO UPSHIFT	(a) Low fluid level.	(a) Refill to correct level with Automatic Transmission Fluid AQ-ATF, Suffix A. or (Dexron).
	(b) Incorrect throttle linkage adjustment.	(b) Adjust throttle linkage.
	(c) Kickdown band out of adjustment.	(c) Adjust kickdown band.
	(d) Hydraulic pressures too high or low.	(d) Perform hydraulic pressure tests and adjust to specifications.
	(e) Governor sticking or leaking.	(e) Remove and clean governor. Replace parts as necessary.
	(f) Valve body malfunction or leakage.	(f) Perform pressure tests to determine cause and correct as required.
	(g) Clutches or servos sticking or not operating.	(g) Remove valve body assembly and perform air pressure tests. Repair as required.
	(h) Faulty oil pump.	(h) Perform hydraulic pressure tests, adjust or repair as required.
	(i) Kickdown servo, band or linkage malfunction.	(i) Inspect servo for sticking, broken seal rings, binding linkage or faulty band lining. Repair as required.
	(j) Worn or faulty front clutch.	(j) Disassemble and inspect clutch. Repair or replace as required.
	(k) Worn or broken input shaft and/or reaction shaft support seal rings.	(k) Inspect and replace seal rings as required, also inspect respective bores for wear. Replace parts as required.

Condition	Possible Cause	Correction
NO KICKDOWN OR NORMAL DOWNSHIFT	(a) Incorrect throttle linkage adjustment.	(a) Adjust throttle linkage.
	(b) Incorrect gearshift control linkage adjustment.	(b) Adjust control linkage.
	(c) Kickdown band out of adjustment.	(c) Adjust kickdown band.
	(d) Hydraulic pressures too high or low.	(d) Perform hydraulic pressure tests and adjust to specifications.
	(e) Governor sticking or leaking.	(e) Remove and clean governor. Replace parts if necessary.
	(f) Valve body malfunction or leakage.	(f) Perform pressure tests to determine cause and correct as required.
	(g) Clutches or servos sticking or not operating.	(g) Remove valve body assembly and perform air pressure tests. Repair as required.
	(h) Kickdown servo, band or linkage malfunction.	(h) Inspect servo for sticking, broken seal rings, binding linkage or faulty band lining. Repair as required.
	(i) Overrunning clutch not holding.	(i) Disassemble transmission and repair overrunning clutch as required.
SHIFTS ERRATIC	(a) Low fluid level.	(a) Refill to correct level with Automatic Transmission Fluid, AQ-ATF, Suffix A. or (Dexron).
	(b) Aerated fluid.	(b) Inspect for air leakage into pump suction passages.
	(c) Incorrect throttle linkage adjustment.	(c) Adjust throttle linkage.
	(d) Incorrect gearshift control linkage adjustment.	(d) Adjust control linkage.
	(e) Hydraulic pressures too high or low.	(e) Perform hydraulic pressure tests and adjust to specifications.
	(f) Governor sticking or leaking.	(f) Remove and clean governor. Replace parts if necessary.
	(g) Oil filter clogged.	(g) Replace oil filter.
	(h) Valve body malfunction or leakage.	(h) Perform pressure tests to determine cause and correct as required.
	(i) Clutches or servos sticking or not operating.	(i) Remove valve body assembly and perform air pressure tests. Repair as required.
	(j) Faulty oil pump.	(j) Perform hydraulic pressure tests, adjust or repair as required.
	(k) Worn or broken input shaft and/or reaction shaft support seal rings.	(k) Inspect and replace seal rings as required, also inspect respective bores for wear. Replace parts as required.
SLIPS IN FORWARD DRIVE POSITIONS	(a) Low fluid level.	(a) Refill to correct level with Automatic Transmission Fluid, AQ-ATF, Suffix A. or (Dexron).
	(b) Aerated fluid.	(b) Inspect for air leakage into oil pump suction passages.
	(c) Incorrect throttle linkage adjustment.	(c) Adjust throttle linkage.
	(d) Incorrect gearshift control linkage adjustment.	(d) Adjust control linkage.
	(e) Hydraulic pressures too low.	(e) Perform hydraulic pressure tests and adjust to specifications.
	(f) Valve body malfunction or leakage.	(f) Perform pressure tests to determine cause and correct as required.
	(g) Accumulator sticking, broken rings or spring.	(g) Inspect accumulator for sticking, broken rings or spring. Repair as required.
	(h) Clutches or servos sticking or not operating.	(h) Remove valve body assembly and perform air pressure tests. Repair as required.
	(i) Worn or faulty front and/or rear clutch.	(i) Disassemble and inspect clutch. Repair or replace as required.
	(j) Overrunning clutch not holding.	(j) Disassemble transmission and repair overrunning clutch as required.

Condition	Possible Cause	Correction
	(k) Worn or broken input shaft and/or reaction shaft support seal rings.	(k) Inspect and replace seal rings as required, also inspect respective bores for wear. Replace parts as required.
SLIPS IN REVERSE ONLY	(a) Low fluid level.	(a) Refill to correct level with Automatic Transmission Fluid, AQ-ATF, Suffix A. or (Dexron).
	(b) Aerated fluid.	(b) Inspect for air leakage into pump suction passages.
	(c) Incorrect gearshift control linkage adjustment.	(c) Adjust control linkage.
	(d) Hydraulic pressures too high or low.	(d) Perform hydraulic pressure tests and adjust to specifications.
	(e) Low-reverse band out of adjustment.	(e) Adjust low-reverse band.
	(f) Valve body malfunction or leakage.	(f) Perform pressure tests to determine cause and correct as required.
	(g) Front clutch or rear servo, sticking or not operating.	(g) Remove valve body assembly and perform air pressure tests. Repair as required.
	(h) Low-reverse servo, band or linkage malfunction.	(h) Inspect servo for damaged seals, binding linkage or faulty band lining. Repair as required.
	(i) Faulty oil pump.	(i) Perform hydraulic pressure tests, adjust or repair as required.
SLIPS IN ALL POSITIONS	(a) Low fluid level.	(a) Refill to correct level with Automatic Transmission Fluid, AQ-ATF, Suffix A. or (Dexron).
	(b) Hydraulic pressures too low.	(b) Perform hydraulic pressure tests and adjust to specifications.
	(c) Valve body malfunction or leakage.	(c) Perform pressure tests to determine cause and correct as required.
	(d) Faulty oil pump.	(d) Perform hydraulic pressure tests, adjust or repair as required.
	(e) Clutches or servos sticking or not operating.	(e) Remove valve body assembly and perform air pressure tests. Repair as required.
	(f) Worn or broken input shaft and/or reaction shaft support seal rings.	(f) Inspect and replace seal rings as required, also inspect respective bores for wear. Replace parts as required.
NO DRIVE IN ANY POSITION	(a) Low fluid level.	(a) Refill to correct level with Automatic Transmission Fluid, AQ-ATF, Suffix A. or (Dexron).
	(b) Hydraulic pressures too low.	(b) Perform hydraulic pressure tests and adjust to specifications.
	(c) Oil filter clogged.	(c) Replace oil filter.
	(d) Valve body malfunction or leakage.	(d) Perform pressure tests to determine cause and correct as required.
	(e) Faulty oil pump.	(e) Perform hydraulic pressure tests, adjust or repair as required.
	(f) Clutches or servos sticking or not operating.	(f) Remove valve body assembly and perform air pressure tests. Repair as required.
	(g) Torque converter failure.	(g) Replace torque converter.
NO DRIVE IN FORWARD DRIVE POSITIONS	(a) Hydraulic pressures too low.	(a) Perform hydraulic pressure tests and adjust to specifications.
	(b) Valve body malfunction or leakage.	(b) Perform pressure tests to determine cause and correct as required.
	(c) Clutches or servos, sticking or not operating.	(c) Remove valve body assembly and perform air pressure tests. Repair as required.
	(d) Worn or faulty rear clutch.	(d) Disassemble and inspect clutch. Repair or replace as required.
	(e) Overrunning clutch not holding.	(e) Disassemble transmission and repair overrunning clutch as required.

Condition	Possible Cause	Correction
	(f) Worn or broken input shaft and/or reaction shaft support seal rings.	(f) Inspect and replace seal rings as required, also inspect respective bores for wear. Replace parts as required.
NO DRIVE IN REVERSE	(a) Incorrect gearshift control linkage adjustment.	(a) Adjust control linkage.
	(b) Hydraulic pressures too low.	(b) Perform hydraulic pressure tests and adjust to specifications.
	(c) Low-reverse band out of adjustment.	(c) Adjust low-reverse band.
	(d) Valve body malfunction or leakage.	(d) Perform pressure tests to determine cause and correct as required.
	(e) Front clutch or rear servo, sticking or not operating.	(e) Remove valve body assembly and perform air pressure tests. Repair as required.
	(f) Low-reverse servo, band or linkage malfunction.	(f) Inspect servo for damaged seals, binding linkage or faulty band lining. Repair as required.
	(g) Worn or faulty front clutch.	(g) Disassemble and inspect clutch. Repair or replace as required.
DRIVES IN NEUTRAL	(a) Incorrect gearshift control linkage adjustment.	(a) Adjust control linkage.
	(b) Valve body malfunction or leakage.	(b) Perform pressure tests to determine cause and correct as required.
	(c) Rear clutch dragging.	(c) Inspect clutch and repair as required.
DRAGS OR LOCKS	(a) Kickdown band out of adjustment.	(a) Adjust kickdown band.
	(b) Low-reverse band out of adjustment.	(b) Adjust low-reverse band.
	(c) Kickdown and/or low-reverse servo, band, linkage malfunction.	(c) Inspect servo for sticking, broken seal rings, binding linkage or faulty band lining. Repair as required.
	(d) Front and/or rear clutch faulty.	(d) Disassemble and inspect clutch. Repair or replace as required.
	(e) Planetary gear sets broken or seized.	(e) Inspect condition of planetary gear sets and replace as required.
	(f) Overrunning clutch worn, broken or seized.	(f) Inspect condition of overrunning clutch and replace parts as required.
GRATING, SCRAPING GROWLING NOISE	(a) Kickdown band out of adjustment.	(a) Adjust kickdown band.
	(b) Low-reverse band out of adjustment.	(b) Adjust low-reverse band.
	(c) Output shaft bearing and/or bushing damaged.	(c) Remove extension housing and replace bearing and/or bushing.
	(d) Governor support binding or broken seal rings.	(d) Inspect condition of governor support and repair as required.
	(e) Oil pump scored or binding.	(e) Inspect condition of pump and repair as required.
	(f) Front and/or rear clutch faulty.	(f) Disassemble and inspect clutch. Repair or replace as required.
	(g) Planetary gear sets broken or seized.	(g) Inspect condition of planetary gear sets and replace as required.
	(h) Overrunning clutch worn, broken or seized.	(h) Inspect condition of overrunning clutch and replace parts as required.
BUZZING NOISE	(a) Low fluid level.	(a) Refill to correct level with Automatic Transmission Fluid, AQ-ATF, Suffix A. or (Dexron).
	(b) Pump sucking air.	(b) Inspect pump for nicks or burrs on mating surfaces, porous casing, and/or excessive rotor clearance. Replace parts as required.
	(c) Valve body malfunction.	(c) Remove and recondition valve body assembly.
	(d) Overrunning clutch inner race damaged.	(d) Inspect and repair clutch as required.
HARD TO FILL, OIL FLOWS OUT FILLER TUBE	(a) High fluid level.	(a) Drain fluid to correct level.
	(b) Breather clogged.	(b) Inspect and clean breather vent opening in pump housing.

Condition	Possible Cause	Correction
	(c) Oil filter clogged.	(c) Replace oil filter.
	(d) Aerated fluid.	(d) Inspect for air leakage into oil pump suction passages.
TRANSMISSION OVERHEATS	(a) Low fluid level.	(a) Refill to correct level with Automatic Transmission Fluid, AQ-ATF, Suffix A. or (Dexron).
	(b) Kickdown band adjustment too tight.	(b) Adjust kickdown band.
	(c) Low-reverse band adjustment too tight.	(c) Adjust low-reverse band.
	(d) Faulty cooling system.	(d) Inspect the transmission cooling system, clean and repair as required.
	(e) Cracked or restricted oil cooler line or fitting.	(e) Inspect, repair or replace as required.
	(f) Faulty oil pump.	(f) Inspect pump for incorrect clearance, repair as required.
	(g) Insufficient clutch plate clearance in front and/or rear clutches.	(g) Measure clutch plate clearance and correct with proper size snap ring.
STARTER WILL NOT ENERGIZE IN NEUTRAL OR PARK	(a) Incorrect gearshift control linkage adjustment.	(a) Adjust control linkage.
	(b) Faulty or incorrectly adjusted neutral starting switch.	(b) Test operation of switch with a test lamp. Adjust or replace as required.
	(c) Broken lead to neutral switch.	(c) Inspect lead and test with a test lamp. Repair broken lead.

STALL TEST

WARNING: During test let no one stand in front of vehicle.

The stall test consists of determining the engine speed obtained at full throttle in D position. This test checks the torque converter stator clutch operation, and the holding ability of the transmission clutches. The transmission oil level should be checked and the engine brought to normal operating temperature before stall operation. **Both the parking and service brakes must be fully applied and front wheels blocked while making this test.**

Do not hold the throttle open any longer than is necessary to obtain a maximum engine speed reading, **and never longer than five seconds at a time.** If more than one stall check is required, operate the engine at approximately 1,000 rpm in neutral for 20 seconds to cool the transmission fluid between runs. If engine speed exceeds the maximum limits shown, release the accelerator immediately since transmission clutch slippage is indicated.

STALL SPEED ABOVE SPECIFICATION

If stall speed exceeds the maximum specified in chart by more than 200 rpm, transmission clutch slippage is indicated. Follow the transmission oil pressure and air pressure checks outlined in the Service in Vehicle section to determine the cause of slippage.

STALL SPEED BELOW SPECIFICATION

Low stall speeds **with a properly tuned engine** indicate torque converter stator clutch problems. A road test will be necessary to identify the exact problem.

If stall speeds are 250-350 rpm below specification, and the vehicle operates properly at highway speeds, but has poor through-gear aceleration, the stator overrunning clutch is slipping.

If stall speed and acceleration are normal, but abnormally high throttle opening is required to maintain highway speeds, the stator clutch has seized.

Both of these stator defects require replacement of the torque converter.

NOISE

A whining or siren-like noise due to fluid flow is normal during stall operation with some converters; however, loud metallic noises from loose parts or interference within the assembly indicate a defective torque converter. To confirm that the noise originates within the converter, operate the vehicle at light throttle in D and N on a hoist and listen under the transmission bell housing.

STALL SPEED SPECIFICATION CHART

Engine Model (C.I.D.)	Transmission Type	Engine Speed (RPM)
170	A904-G	1500-1700
225	A904-G	1800-2000
225	A727-RG	1450-1650
273	A904-A	1950-2150
318	A904-LA	2100-2320
318	A727-A	1750-1950
340-4 BBL.	A727-A	2250-2450
383-2 BBL.	A727-B	1850-2100
383-4 BBL.	A727-B	2350-2650
440-4 BBL.	A727-B	2000-2300
426-2-4 BBL.	A727-B	2650-2850

SERVICE PROCEDURES

SERVICE IN VEHICLE

Various transmission components can be removed for repairs without removing the transmission from the vehicle. The removal, reconditioning and installation procedures for these components are covered here, except the valve body reconditioning, which is described on Page 69.

ALUMINUM THREAD REPAIR

Damaged or worn threads in the aluminum transmission case and valve body can be repaired by the use of Heli-Coils. Essentially, this repair consists of drilling out the worn or damaged threads, tapping the hole with a special Heli-Coil Tap, and installing a Heli-Coil insert into the tapped hole. This brings the hole back to its original thread size.

The chart lists the threaded hole sizes which are used in the aluminum case and valve body, and the necessary tools and inserts for the repair of damaged or worn threads. Heli-Coil tools and inserts are readily available from most automotive parts jobbers. **Some thread drag may occur in screwing a bolt into the installed Heli-Coil insert. Therefore, a torque reading should be taken of the thread drag with an inch-pound torque wrench and added to the specified bolt torque, so that all bolts securing a particular part will be tightened to the same torque.**

LUBRICATION

The transmission fluid and filter should provide satisfactory lubrication and protection to the automatic transmission and no change is recommended in vehicles used in normal service. Regularly scheduled fluid and filter changes, therefore will not be required, except when the operation of the vehicle is classified as severe.

If, for any reason, the factory fill fluid is replaced with another fluid, the fluid must be changed every three years or 36,000 miles in normal service.

Hemi Engine Vehicles: The factory fill fluid should be changed after the first 24,000 miles or 24 months, whichever occurs first, and periodically thereafter every 12,000 miles or 12 months. The filter should be changed with each fluid change. If for any reason, the factory fill fluid is replaced with another fluid prior to the 24,000 mile or 24 month interval, the fluid must be changed every 12,000 miles or 12 months.

Fluid Level

Inspect fluid level every six months with engine and transmission at normal operating temperature. Refer to "Lubrication and Maintenance," Group O. The transmission should not be idled in gear for long periods.

Trailer Towing Service and Hard Usage

If vehicle is used for trailer towing or is used in hard or severe service, more frequent servicing is required as outlined.

Drain and refill transmission and replace filter initially at 36,000 miles or 3 years and every 12,000 miles or 12 months thereafter.

Drain and Refill

(1) Raise vehicle on a hoist. Place a drain container with a large opening, under transmission oil pan.

(2) Loosen pan bolts at one corner, tap the pan to break it loose allowing fluid to drain, then remove the oil pan.

(3) Remove access plate from in front of converter, remove drain plug allowing fluid to drain (Fig. 4). Install and tighten converter drain plug to 110 inch-pounds, and install the access plate.

(4) If necessary, adjust the reverse band.

(5) Install a new filter on bottom of the valve body, and tighten retaining screws to 35 inch-pounds.

(6) Clean the oil pan, and reinstall using a new gasket. Tighten oil pan bolts to 150 inch-pounds.

HELI-COIL CHART

Heli-Coil Insert			Drill	Tap	Inserting Tool	Extracting Tool
Thread Size	Part No.	Insert Length	Size	Part No.	Part No.	Part No.
10-24	1185-3	.285″	13/64″ (.203″)	3 CPB	528-3N	1227-6
1/4-20	1185-4	3/8″	17/64″ (.265″)	4 CPB	528-4N	1227-6
5/16-18	1185-5	15/32″	Q (.332″)	5 CPB	528-5N	1227-6
3/8-16	1185-6	9/16″	X (.397″)	6 CPB	528-6N	1227-6
7/16-14	1185-7	21/32″	29/32″ (.453″)	7 CPB	528-7N	1227-16

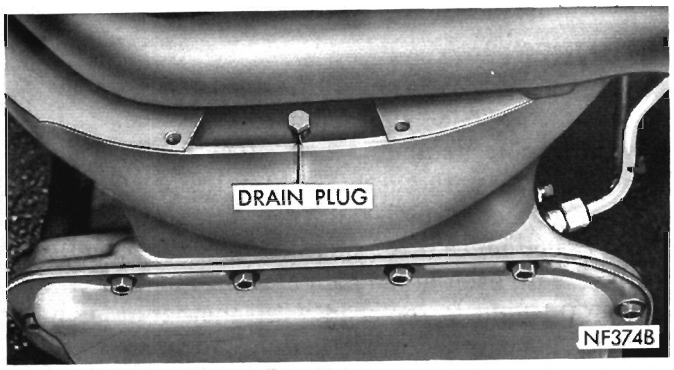

Fig. 4—Converter Drain Plug

(7) Pour six quarts of Automatic Transmission Fluid AQ-ATF Suffix "A" or (Dexron) through the filler tube.

(8) Start engine and allow to idle for at least two minutes. Then, with parking brake on, move selector lever momentarily to each position, ending in the **neutral** position.

(9) Add sufficient fluid to bring level to the **"ADD ONE PINT"** mark.

Recheck fluid level after transmission is at normal operating temperature. The level should be between the **"FULL"** mark and **"ADD ONE PINT"** mark (Fig. 5).

CAUTION: To prevent dirt from entering transmission, make certain that dip stick cap is fully seated onto the filler tube.

GEARSHIFT LINKAGE ADJUSTMENT

(1) Place gearshift selector lever in **PARK** position and loosen control rod swivel clamp screw a few turns (Fig. 6).

(2) Move transmission control lever (Fig. 7), all the way to rear (in park detent).

(3) With control lever on transmission in park position detent and selector lever in **PARK** position, tighten swivel clamp screw to 100 inch-pounds.



Fig. 5—Dip Stick Markings

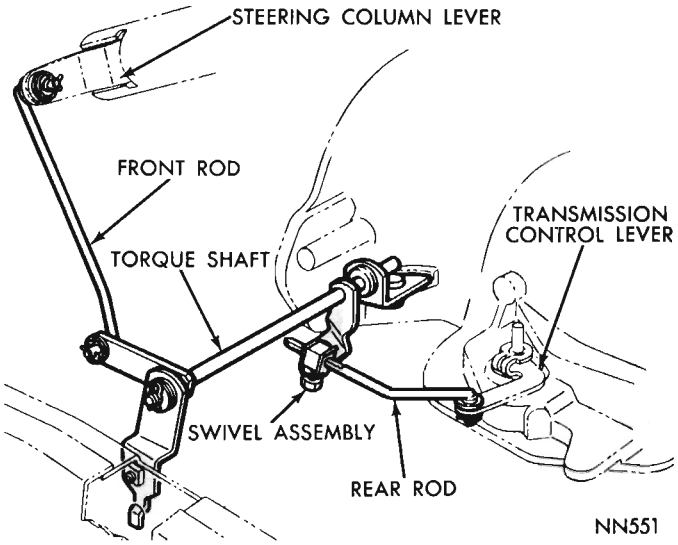

Fig. 6—Gearshift Linkage

CONSOLE GEARSHIFT

Removal

(1) Disconnect negative (ground) cable from the battery.

(2) Remove gearshift knob set screw with an allen wrench (Fig. 8). Unscrew button, spring and knob assembly from cable end and remove from the lever.

(3) **Satellite and Fury Models:** Remove two screws from rear end of upper finish plate (Fig. 9). Raise rear end of plate and work it rearward to disengage from console, disconnect dial lamp wire connectors. On some models, remove console lid and/or center arm rest to gain access to the two upper finish plate screws.

Valiant Models: Remove two screws from front corners of console (Fig. 10). Raise console lid and remove two screws from bottom of tray. Raise console enough to disconnect dial lamp and other electrical connections, then lift off console assembly.

(4) Disconnect upper rod from gearshift unit (Fig.

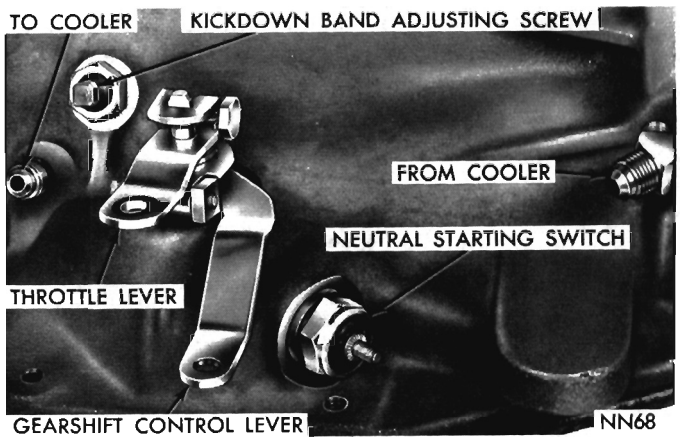

Fig. 7—External Controls and Adjustments

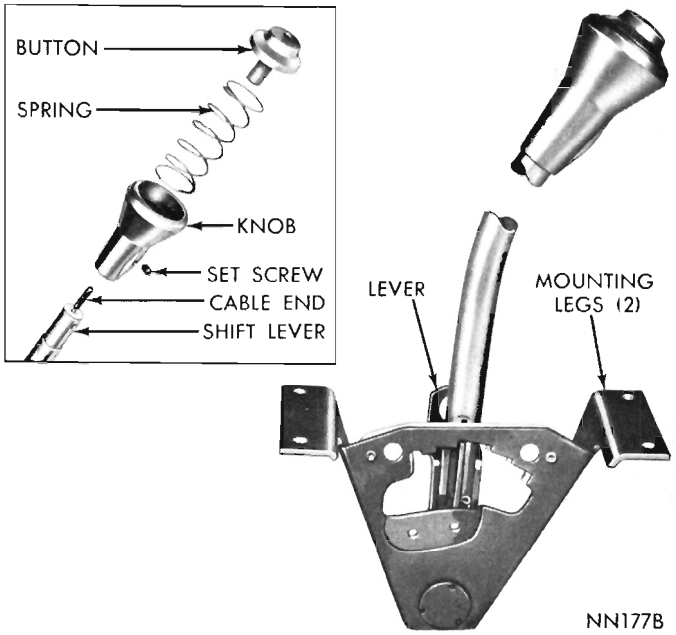

Fig. 8—Console Gearshift Unit

11). Remove gearshift to floor bracket bolts and remove unit.

Installation

(1) Install gearshift unit in its bracket, install and tighten retaining bolts securely (Fig. 11). Attach upper rod to the unit.

(2) **Satellite and Fury Models:** Connect dial lamp wires and install upper finish plate. Secure with the two screws. If removed, reinstall console lid and/or center arm rest.

Valiant Models: Lower console down over shift lever, connect dial lamp and other electrical connections. Install and tighten console retaining screws.

(3) With gearshift lever in NEUTRAL, thread button, spring and knob assembly on the cable end until serrated surface on button is approximately 1/32 inch above top of knob. Secure knob with set screw.

(4) Connect battery ground cable.

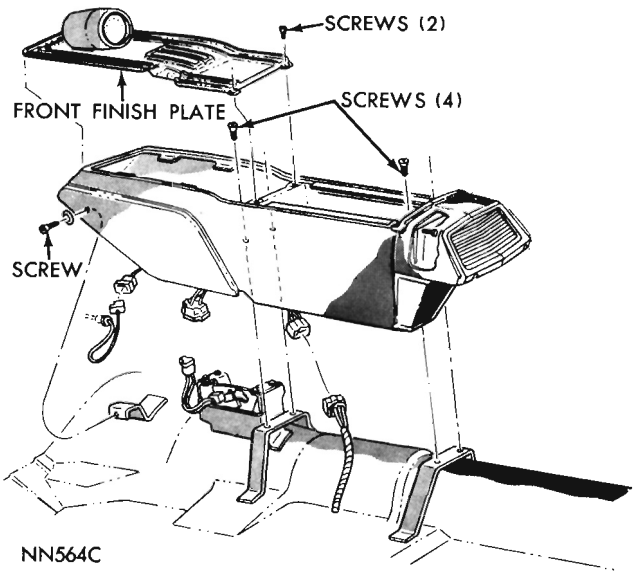

Fig. 9—Removing or Installing Console (Satellite and Fury Models)

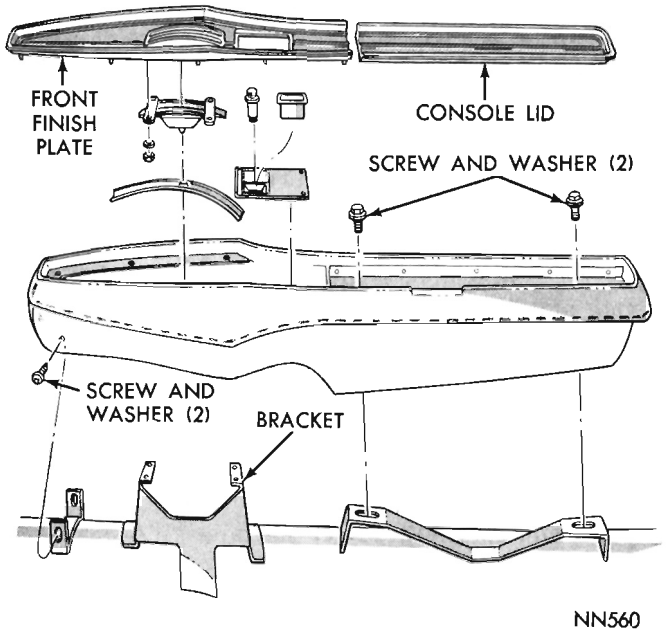

Fig. 10—Removing or Installing Console (Valiant and Barracuda Models)

Linkage Adjustment

(1) Place gearshift selector lever in **PARK** position and loosen lower rod swivel clamp screw a few turns (Fig. 11).

(2) Move transmission control lever (Fig. 7), all the way to rear (in park detent).

(3) With control lever on transmission in park position detent, and selector lever in **PARK** position, tighten swivel clamp screw to 100 inch-pounds.

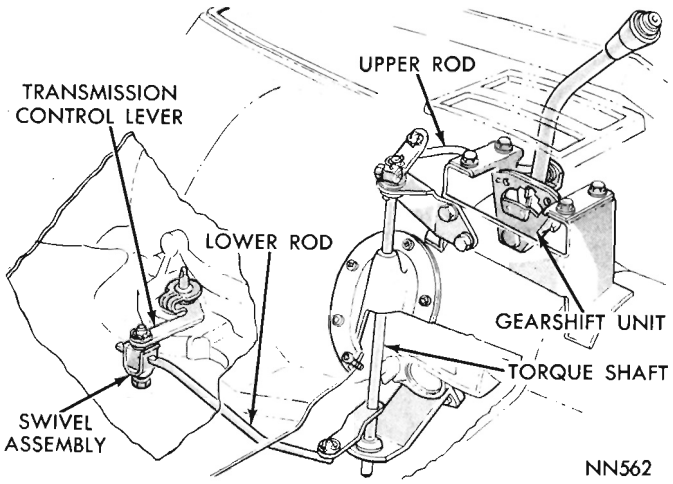

Fig. 11—Console Gearshift Linkage

BACK-UP LIGHT AND NEUTRAL STARTING SWITCH (Figs. 12 and 13)

Replacement and Test

The **Neutral Starting Switch** is the center terminal of the 3 terminal switch. It provides ground for the starter solenoid circuit through the selector lever cam in only **Park** and **Neutral** positions.

(1) To test switch, remove wiring connector from switch and test for continuity between center pin of switch and transmission case. Continuity should exist only when transmission is in **Park** or **Neutral.**

(2) Check gearshift linkage adjustment before replacing a switch which tests bad.

(3) Unscrew switch from transmission case allowing fluid to drain into a container. Move selector lever to **Park** and then to **Neutral** positions, and inspect to see that the switch operating lever fingers are centered in switch opening in the case.

(4) Screw switch and new seal into transmission case and tighten to 24 foot-pounds. Retest switch with the test lamp.

(5) Add fluid to transmission to bring up to proper level.

(6) The **Back-Up Light Switch Circuit** is through the two outside terminals of the 3 terminal switch.

(7) To test switch, remove wiring connector from switch and test for continuity between the two outside pins.

(8) Continuity should exist only with transmission in **Reverse** position.

(9) No continuity should exist from either pin to the case.

BAND ADJUSTMENTS

Kickdown Band

The kickdown band adjusting screw is located on left side of the transmission case (Fig. 7).

(1) Loosen lock nut and back off approximately five turns. Test adjusting screw for free turning in the transmission case.

(2) Using wrench, Tool C-3380 with adapter C-3705, tighten band adjusting screw 47 to 50 inch-pounds. If adapter C-3705 is not used, tighten adjusting screw to 72 inch-pounds which is the true torque.

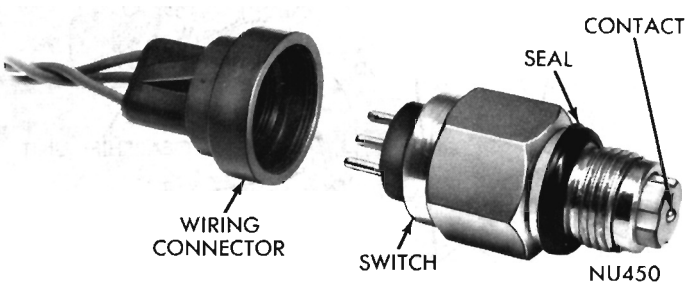

Fig. 12—Neutral-Park Starting Switch and Back-Up Light Switch

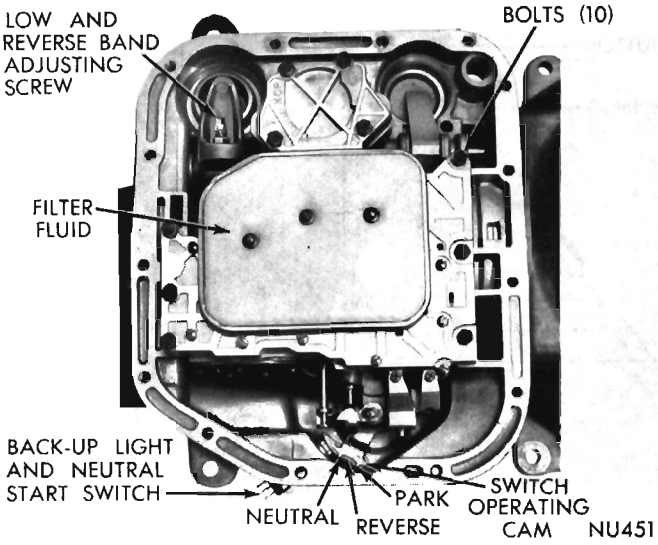

Fig. 13—Bottom View of Transmission (Pan Removed)

(3) **A-904:** Back off adjusting screw 2 turns (2-5/8 turns for 170 cu. in. engine). Hold adjusting screw in this position and tighten lock nut to 25 foot-pounds.

A-727: Back off adjusting screw 2 turns (1-1/2 turns for 426 cu. in. engine). Hold adjusting screw in this position and tighten lock nut to 29 foot-pounds.

Low and Reverse Band

(1) Raise vehicle, drain transmission fluid and remove the oil pan.

(2) Loosen adjusting screw lock nut and back off nut approximately five turns (Fig. 13). Test adjusting screw for free turning in the lever.

(3) Using wrench, Tool C-3380 with adapter C-3705, tighten band adjusting screw 47 to 50 inch-pounds. If adapter C-3705 is not used, tighten adjusting screw to 72 inch-pounds which is the true torque.

(4) **A-904:** Back off adjusting screw 3-1/4 turns (4 turns for 318 cu. in. engine). Hold adjusting screw in this position and tighten lock nut to 20 foot-pounds.

A-727: Back off adjusting screw 2 turns. Hold adjusting screw in this position and tighten lock nut to 35 foot-pounds.

(5) Reinstall oil pan using a new gasket. Tighten oil pan bolts to 150 inch-pounds.

(6) Fill transmission with Automatic Transmission Fluid AQ-ATF, Suffix "A" or (Dexron).

THROTTLE LINKAGE ADJUSTMENT

With engine at operating temperature and carburetor off fast idle cam, adjust idle speed of engine using a tachometer. Refer to "Fuel System" Group 14, for idle speed Specifications.

All Models with 170 or 225 Cu. In. Eng. (Fig. 14)

(1) Follow detailed instructions in Lubrication Section for linkage lubrication of all models.

(2) Disconnect choke (4) at carburetor or block choke valve in full open position. Open throttle slightly to release fast idle cam, then return carburetor to curb idle.

(3) **Hold transmission lever (9) firmly forward against its stop while performing the next two steps. It is important that the lever remains firmly against the stop during these steps to insure a correct adjustment.**

(4) To make transmission rod length adjustment, loosen the slotted link lock bolt (12). Pull forward on the slotted adjuster link (7) so that it contacts carburetor lever pin.

(5) Tighten transmission rod adjustment lock bolt (12) to 95 inch-pounds. To check transmission linkage freedom of operation, move slotted adjuster link to the full rearward position, then allow it to return slowly, making sure it returns to the full forward position.

(6) When carburetor throttle is opened, the transmission lever (9) should begin its travel at the same time with no vertical movement of lever or vertical movement of rod (10) in the lever.

(7) Loosen cable clamp nut (5), adjust position of cable housing ferrule (6) in the clamp so that all slack is removed from the cable with carburetor at curb idle. To remove slack from cable, move ferrule (6) in the clamp in direction **away** from carburetor lever.

(8) Back off ferrule (6) 1/4 inch. This provides 1/4 inch free play of cable, with carburetor at curb idle condition. Tighten cable clamp nut to 45 inch-pounds.

(9) Connect choke rod (4) or remove blocking fixture.

All 8 Cyl. Models Except 426 Cu. In. (Figs. 15, 16, 17 or 18)

(1) Follow detailed instructions in Lubrication Section for linkage lubrication of all models.

(2) Disconnect choke (8) at carburetor or block choke valve in full open position. Open throttle slightly to release fast idle cam, then return carburetor to curb idle.

(3) **Hold transmission lever (11) firmly forward against its stop, while performing adjustments in the next four steps. It is important that the lever remains against the stop during these steps to insure a correct adjustment.**

Steps 4 and 5 do not apply to Fury models.

(4) With a 3/16″ diameter rod (9) placed in the holes provided in the upper bellcrank (6) and lever, adjust length of intermediate transmission rod (10) by means of threaded adjustment (2) at upper end. The ball socket (2) must line up with the ball end

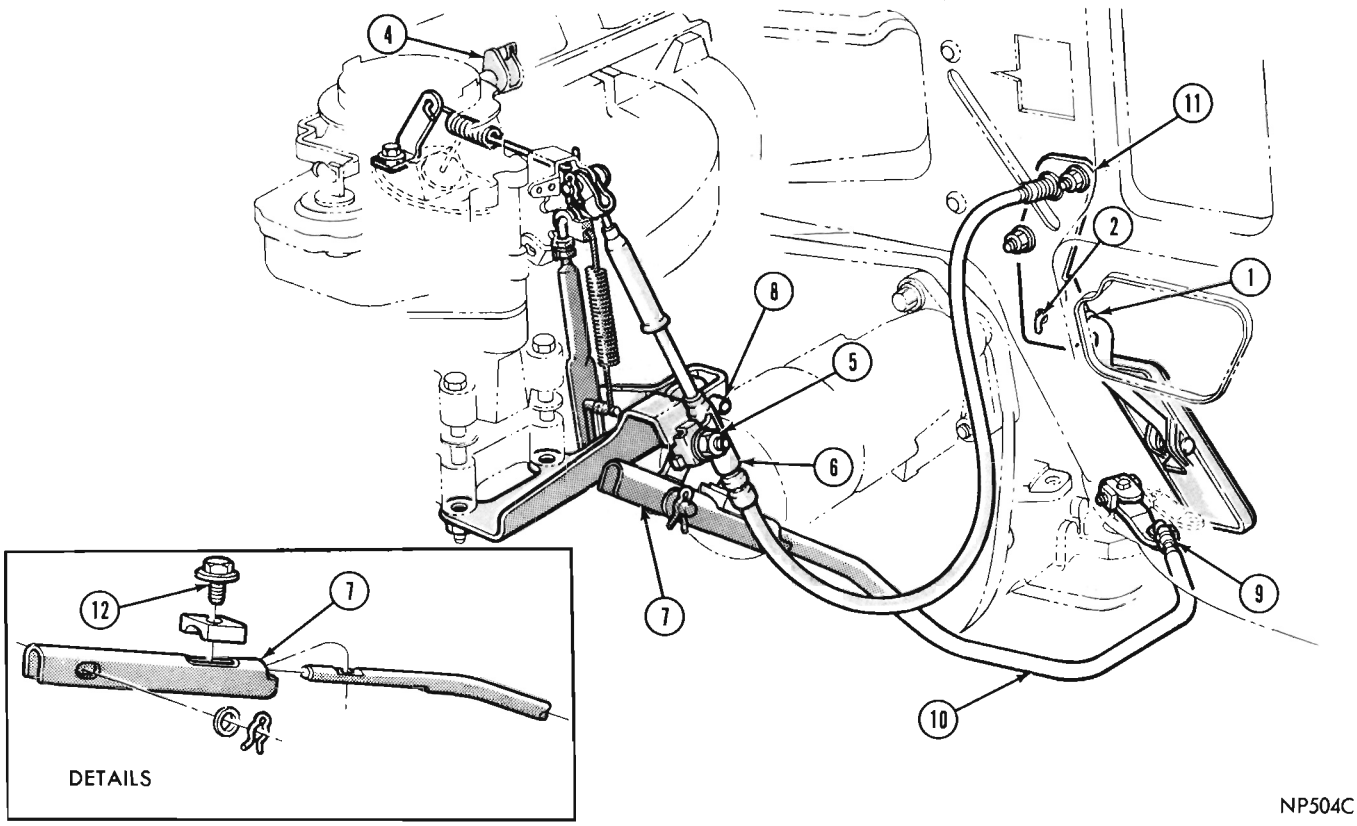

Fig. 14—Throttle Linkage Adjustment (All Models with 170 or 225 Cu. In. Engine)

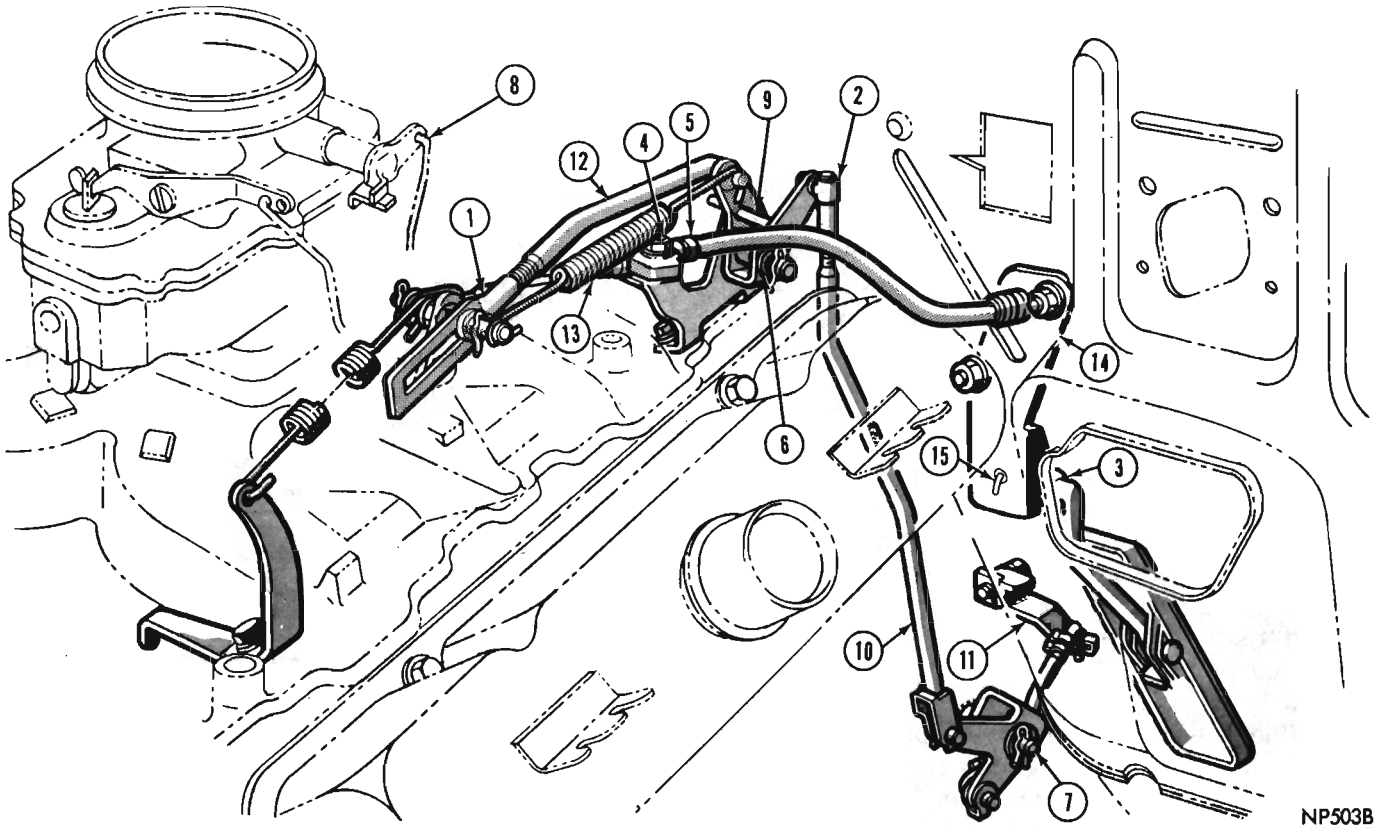

Fig. 15—Throttle Linkage Adjustment (Valiant or Barracuda with 273, 318 or 340 Cu. In. Engine)

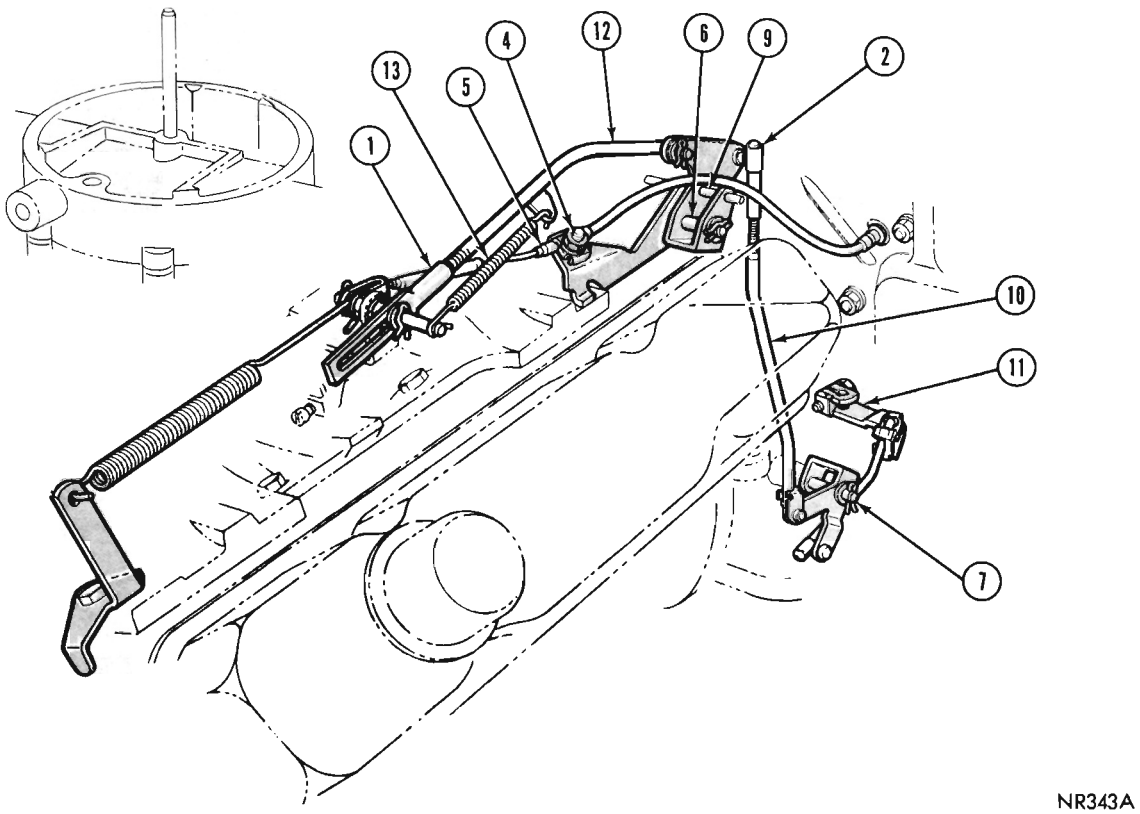

Fig. 16—Throttle Linkage Adjustment (Barracuda with 383 Cu. In. Engine)

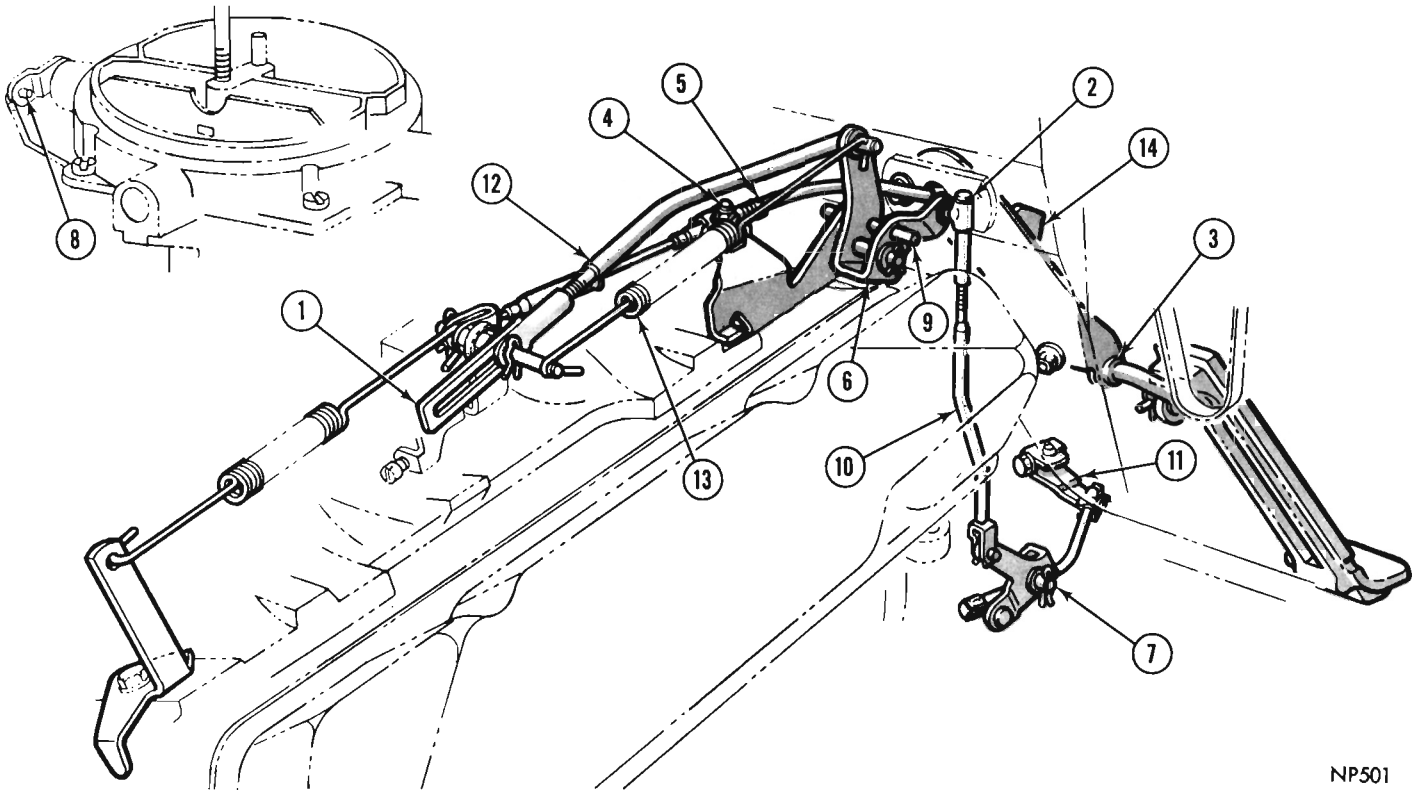

Fig. 17—Throttle Linkage Adjustment (Satellite—8 Cylinder Engine)

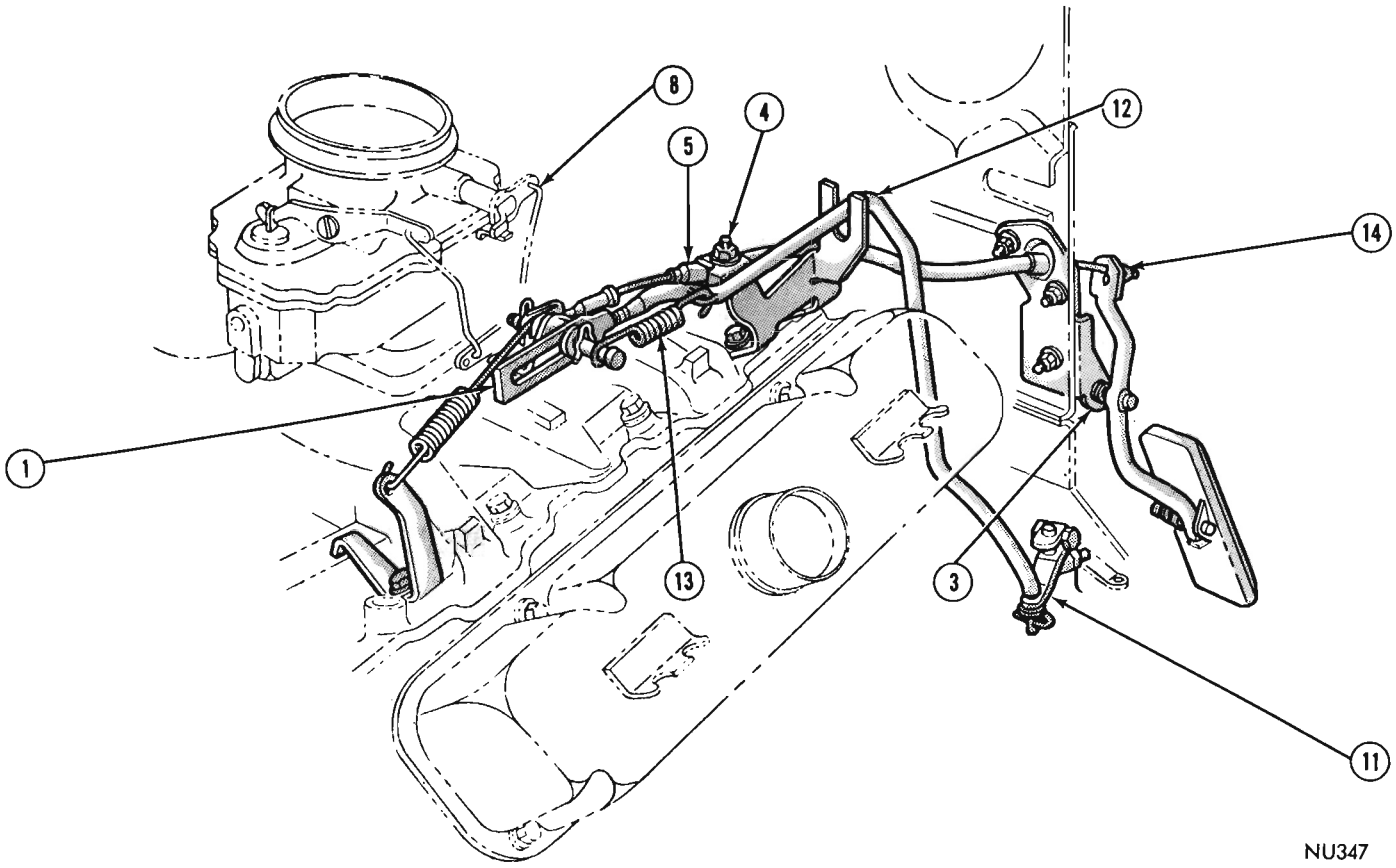

Fig. 18—Throttle Linkage Adjustment (Fury—8 Cylinder Engine)

with a slight downward effort on rod.

(5) Assemble ball socket (2) to ball end and remove 3/16″ rod (9) from upper bellcrank and lever.

(6) Disconnect clip, washer and return spring (13), then adjust length of carburetor rod (12) by pushing rearward on rod with a slight effort and turning the threaded adjustment (1). The rear end of slot should contact carburetor lever pin without exerting any forward force on pin when slotted adjuster link (1) is in its normal operating position against lever pin nut.

(7) Assemble slotted adjustment (1) to carburetor lever pin and install washer and retainer clip. Assemble transmission linkage return spring (13) in place.

(8) To check transmission linkage freedom of operation, move slotted adjuster link (1) to full rearward position, then allow it to return slowly, making sure it returns to full forward position.

(9) Loosen cable clamp nut (4), adjust position of cable housing ferrule (5) in the clamp so that all slack is removed from cable with carburetor at curb idle. To remove slack from cable, move ferrule (5) in the clamp in direction **away** from carburetor lever.

(10) Back off ferrule (5) 1/4″. This provides 1/4″ free play of cable, with carburetor at curb idle condition. Tighten cable clamp nut (4) to 45 inch-pounds.

(11) Connect choke (8) rod or remove blocking fixture.

Models With 426 Cu. In. Eng. (Fig. 19)

(1) Follow detailed instructions in Lubrication Section for linkage lubrication of all models.

(2) Block choke valve in full open position. Open throttle slightly to release fast idle cam, then return carburetor to curb idle.

(3) **Hold transmission lever (10) firmly forward against its stop, while performing adjustments in the next four steps. It is important that the lever remains against the stop during these steps to insure a correct adjustment.**

(4) With a 3/16″ diameter rod (8) placed in the holes provided in upper bellcrank and lever (15), adjust length of intermediate transmission rod (9) by means of threaded adjustment at upper end. The ball socket must line up with the ball end with a slight downward effort on rod.

(5) Assemble ball socket to ball end and remove 3/16″ rod (8) from upper bellcrank and lever (15).

(6) Disconnect return spring (11), adjust length of rod (20) by pushing rearward on rod with a slight effort and turning threaded adjuster link (2). The rear end of slot should contact carburetor lever stud without exerting any forward force on the stud when slotted adjuster link is in its normal operating position.

(7) Assemble slotted adjuster link (2) to carburetor lever stud and install washer and retainer pin. As-

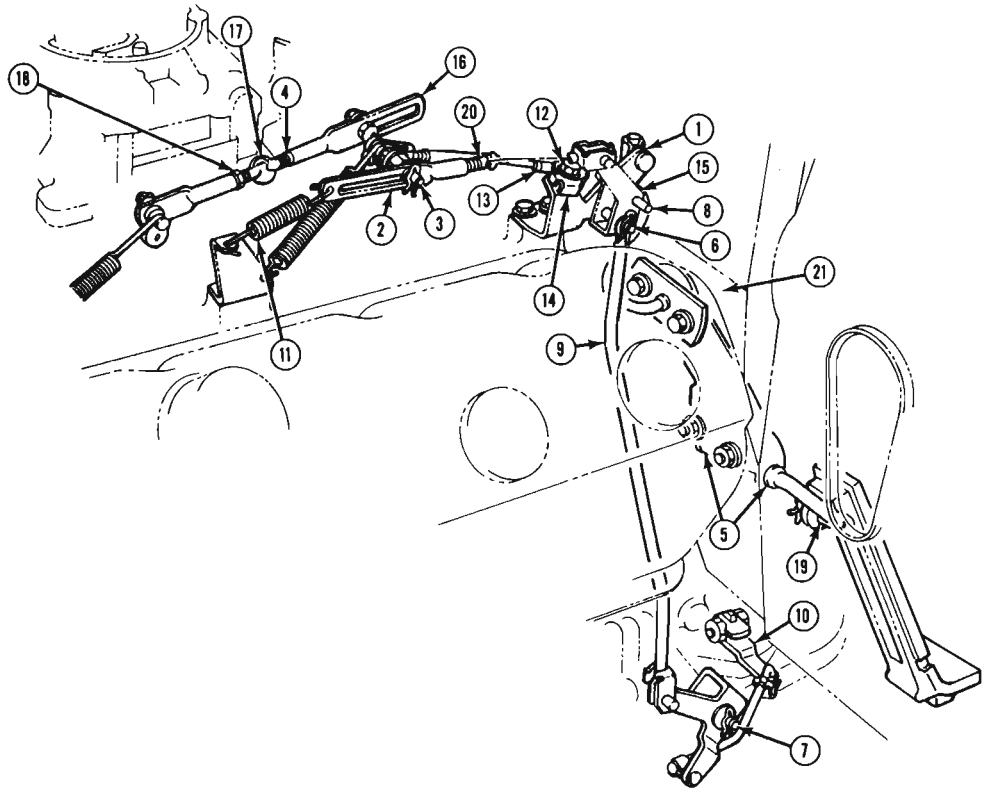

NN974A

Fig. 19—Throttle Linkage Adjustment (With 426 Cu. In. Engine)

semble transmission linkage return spring (11) in place.

(8) To check transmission linkage freedom of operation, move slotted adjuster link (2) to full rearward position, then allow it to return slowly, making sure it returns to the full forward position against the stud.

(9) Loosen cable clamp nut (12), adjust position of cable housing ferrule (13) in the clamp (14) so that all slack is removed from cable with rear carburetor at curb idle. (To remove slack from cable, move ferrule (13) in clamp (14) in direction **away** from carburetor lever.)

(10) Back off ferrule (13) 1/4". This provides 1/4" free play of cable, with carburetor at curb idle condition. Tighten clamp (14) to 45 inch-pounds.

(11) Route cable so it does not interfere with carburetor rod (20) or upper bellcrank (15) throughout full throttle linkage travel.

(12) Attach carburetor rod assembly (4) between the carburetors with slotted rod end (16) attached to outboard side of inboard lever on rear carburetor. With rear carburetor at wide open throttle, adjust length of connector rod (4) so that front carburetor is also at wide open throttle. To lengthen this rod (4), turn adjusting stud (17) clockwise as viewed from front of engine. Tighten the lock nut (18).

(13) Remove choke valve blocking fixture.

HYDRAULIC CONTROL PRESSURE TESTS

Line Pressure and Front Servo Release Pressure

Line pressure and front servo release pressure tests must be made in D (drive) position with rear wheels free to turn. The transmission fluid must be at operating temperature (150 to 200°F).

(1) Install an engine tachometer, raise vehicle on a hoist and position tachometer so it can be read under the vehicle.

(2) Connect two 0-100 psi pressure gauges, Tool C-3292 to pressure take-off-points at side of accumulator and at front servo release (Fig. 20).

(3) With control in D (drive) position, speed up engine slightly until transmission shifts into direct. (Front servo release will be pressurized in direct.) Reduce engine speed slowly to 1,000 rpm. Line pressure at this time (1,000 rpm) must be 54-60 psi, and front servo release pressure must not be more than 3 psi below the line pressure.

(4) Disconnect throttle linkage from transmission throttle lever and move throttle lever gradually to the full throttle position. Line pressure must rise to a maximum of 90-96 psi just before or at kickdown into low gear. Front servo release pressure must follow line pressure up to kickdown point and should not be more than 3 psi below line pressure.

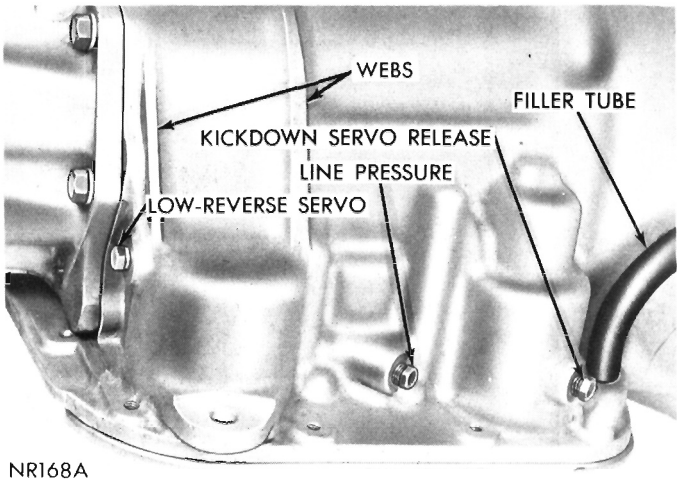

Fig. 20—Pressure Test Locations (Right Side of Case)

If pressure is not 54-60 psi at 1,000 rpm, see "Hydraulic Control Pressure Adjustments".

If front servo release pressures are less than pressures specified and line pressures are within limits, there is excessive leakage in the front clutch and/or front servo circuits. **Always inspect external transmission throttle lever for looseness on the valve body shaft when making the pressure tests.**

Lubrication Pressures

The lubrication pressure test should be made at same time that line pressure and front servo release pressure are tested.

(1) Install a "tee" fitting between cooler return line fitting and fitting hole in transmission case at rear left side of the transmission (Fig. 21). Connect a 0-100 psi pressure gauge, Tool C-3292 to the "tee" fitting.

(2) At 1,000 engine rpm, with throttle closed and transmission in direct, lubrication pressure should be 5-15 psi. Lubrication pressure will be approximately doubled as the throttle is opened to maximum line pressure.

Rear Servo Apply Pressure

(1) Connect a 0-300 psi pressure gauge, Tool C-3293 to apply pressure take-off point at rear servo (Fig. 21).

(2) With transmission control in R (reverse) position and engine speed set at 1600 rpm, reverse servo apply pressure should be 230 to 300 psi.

Governor Pressure

(1) Connect a 0-100 psi pressure gauge, Tool C-3292 to governor pressure take-off point, located at lower left side of extension near the mounting flange (Fig. 21).

(2) Governor pressures should fall within the limits given in the "Governor Pressure Chart."

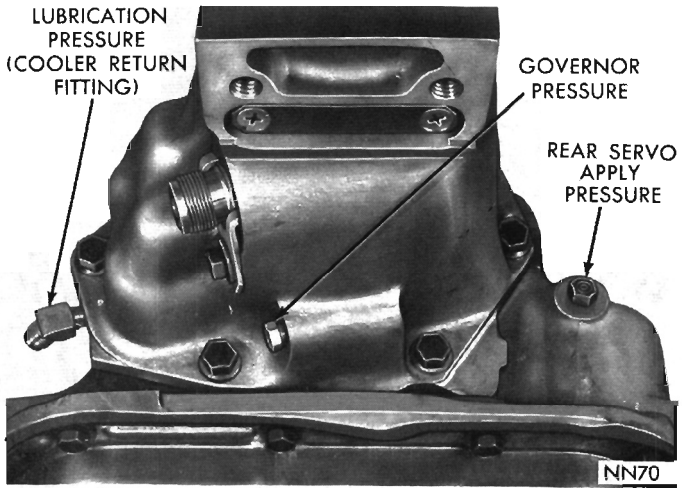

Fig. 21—Pressure Test Locations (Rear End of Case)

If governor pressures are incorrect at the given vehicle speeds, the governor valve and/or weights are probably sticking. **The governor pressure should respond smoothly to changes in mph and should return to 0 to 1-1/2 psi when vehicle is stopped. High pressure at stand still (above 2 psi) will prevent the transmission from downshifting.**

Throttle Pressure

No provisions are made to test the throttle pressure. Incorrect throttle pressure should only be suspected if part throttle shift speeds are either very delayed or occur too early in relation to vehicle speeds. In which case, the throttle linkage should be adjusted before throttle pressure setting is adjusted.

HYDRAULIC CONTROL PRESSURE ADJUSTMENTS

Line Pressure

An incorrect throttle pressure setting will cause incorrect line pressure readings even though line pressure adjustment is correct. Always inspect and correct throttle pressure adjustment before adjusting the line pressure. **Before adjusting line pressure, measure distance between manual valve (valve in 1-low position) and line pressure adjusting screw (Fig. 22). This measurement must be 1-7/8 inches; correct by loosening spring retainer screws and repositioning the spring retainer. The regulator valve may cock and hang up in its bore if spring retainer is out of position.**

If line pressure is not correct, it will be necessary to remove valve body assembly to perform the adjustment.

The approximate adjustment is 1-5/16 inches, measured from valve body to inner edge of adjusting nut (Fig. 23). However, due to manufacturing tolerances, the adjustment can be varied to obtain specified line pressure.

The adjusting screw may be turned with an Allen wrench. One complete turn of adjusting screw changes closed throttle line pressure approximately 1-2/3 psi. Turning adjusting screw counter-clockwise increases pressure, and clockwise decreases pressure.

GOVERNOR PRESSURE CHART

(Six Cylinder Engines)

VEHICLE SPEED TO AXLE RATIOS

170 Cu. In. Eng.		225 Cu. In. Eng.			Pressure Limits
2.76:1	3.23:1	2.76:1	2.93:1	3.23:1	psi
18-20	15-17	18-20	17-20	16-19	15
44-57	37-48	38-46	36-46	34-44	50
69-76	59-65	64-70	60-70	57-66	75

GOVERNOR PRESSURE CHART

(Eight Cylinder Engines)

VEHICLE SPEED TO AXLE RATIOS

273 & 318 Cu. In. Eng.		340, 383 or 440 Cu. In. Eng.			Pressure Limits
2.76:1	3.23:1	2.76:1	3.23:1	3.55:1	psi
18-20	15-17	19-21	14-17	15-17	15
45-53	38-44	46-55	39-51	44-50	50
71-78	60-66	74-82	58-71	64-71	75

GOVERNOR PRESSURE CHART

(High Performance Engines)

VEHICLE SPEED TO AXLE RATIOS

426 Cu. In. Eng. 3.23:1	440 Cu. In. Eng. 3.23:1	Pressure Limits psi
20-23	16-19	15
55-64	46-52	50
82-90	68-73	75

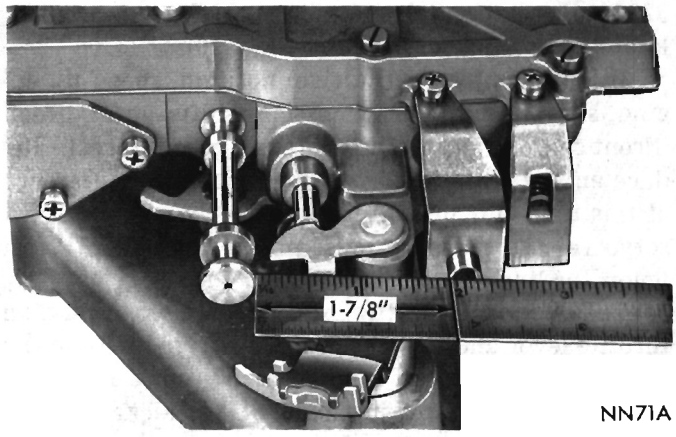

Fig. 22—Measuring Spring Retainer Locations

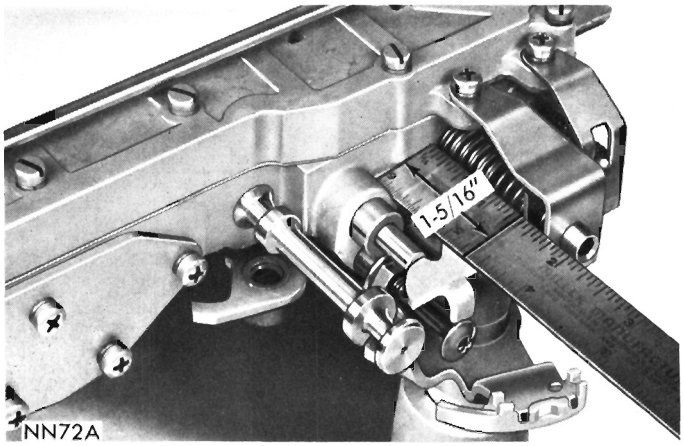

Fig. 23—Line Pressure Adjustment

Throttle Pressure

Throttle pressures cannot be tested accurately; therefore, the adjustment should be measured if a malfunction is evident.

(1) Remove valve body assembly from transmission to perform adjustment.

(2) Loosen throttle lever stop screw lock nut and back off approximately five turns (Fig. 24).

(3) Insert gauge pin of Tool C-3763 between the throttle lever cam and kickdown valve.

(4) By pushing in on tool, compress kickdown valve against its spring so throttle valve is completely bottomed inside the valve body.

(5) As force is being exerted to compress spring, tighten throttle lever stop screw finger tight against throttle lever tang with throttle lever cam touching tool and the throttle valve bottomed. **Be sure adjustment is made with spring fully compressed and valve bottomed in the valve body.**

(6) Remove tool and tighten stop screw lock nut securely.

AIR PRESSURE TESTS

A **"NO DRIVE"** condition might exist even with correct fluid pressure, because of inoperative clutches or bands. The inoperative units, clutches, bands and servos can be located through a series of tests by substituting air pressure for fluid pressure (Fig. 25). The front and rear clutches, kickdown servo, and low-reverse servo may be tested by applying air pressure to their respective passages after the valve body assembly has been removed. To make air pressure tests, proceed as follows:

CAUTION: Compressed air supply must be free of all dirt or moisture. Use a pressure of 30 to 100 psi.

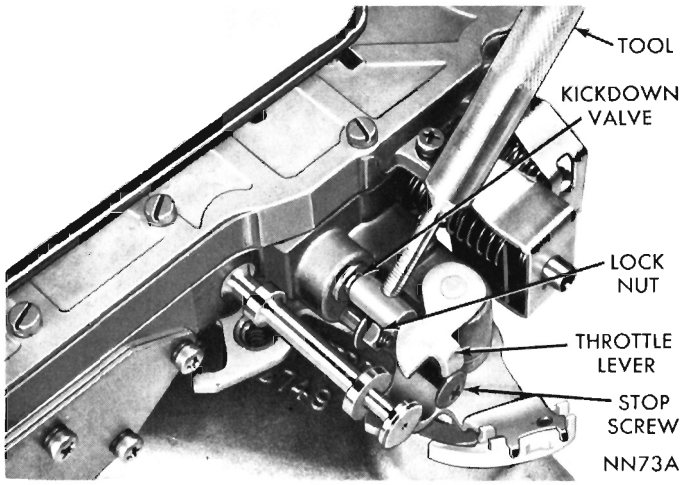

Fig. 24—Throttle Pressure Adjustment

Front Clutch

Apply air pressure to front clutch "apply" passage and listen for a dull "thud" which indicates that front clutch is operating. Hold air pressure on for a few seconds and inspect system for excessive oil leaks.

Rear Clutch

Apply air pressure to rear clutch "apply" passage and listen for a dull "thud" which indicates that rear clutch is operating. Also inspect for excessive oil leaks. **If a dull "thud" cannot be heard in the clutches, place finger tips on clutch housing and again apply air pressure. Movement of piston can be felt as the clutch is applied.**

Kickdown Servo

Direct air pressure into front servo "apply" passage. Operation of servo is indicated by a tightening of front band. Spring tension on servo piston should release the band.

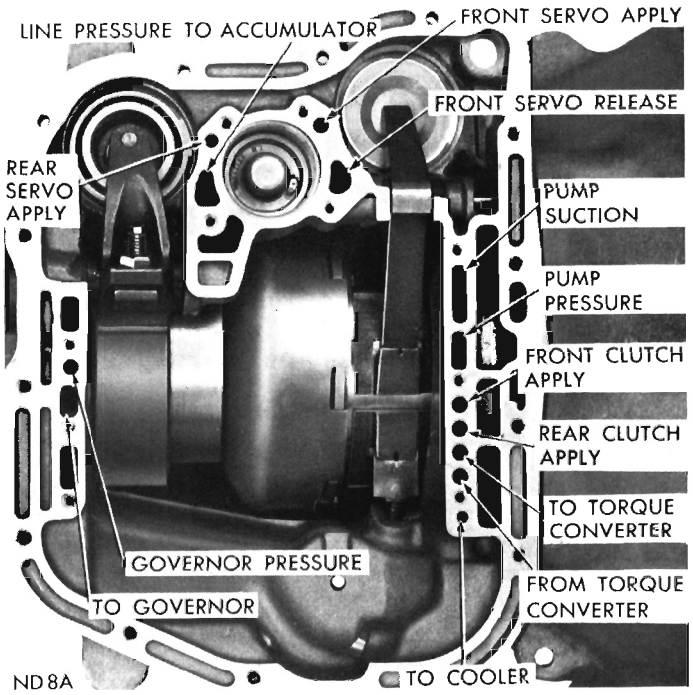

Fig. 25—Air Pressure Tests

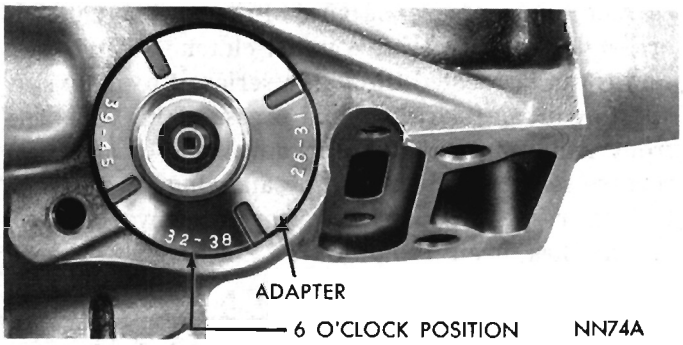

Fig. 26—Speedometer Pinion and Adapter—Installed (Retainer Removed for View)

Low and Reverse Servo

Direct air pressure into rear servo "apply" passage. Operation of servo is indicated by a tightening of rear band. Spring tension on servo piston should release the band.

If clutches and servos operate properly, no up-shift or erratic shift conditions indicate that malfunctions exist in the valve body.

Governor

Governor operating failures can generally be diagnosed by a road test or hydraulic pressure test. Refer to "Hydraulic Control Pressure Tests".

SPEEDOMETER PINION

Removal and Installation

Rear axle gear ratio and tire size determines pinion gear size requirements. Refer to "Speedometer Pinion Chart" in Specifications for pinion usage.

(1) Remove bolt and retainer securing speedometer pinion adapter in the extension housing (Fig. 26).

(2) With cable housing connected, carefully work adapter and pinion out of the extension housing.

(3) If transmission fluid is found in cable housing, replace seal in the adapter (Fig. 27). Start seal and retainer ring in the adapter, then push them into adapter with Tool C-4004 until tool bottoms (Fig. 28). **CAUTION: Before installing pinion and adapter assembly make sure adapter flange and its mating area on extension housing are perfectly clean. Dirt or sand will cause mis-alignment resulting in speedometer pinion gear noise.**

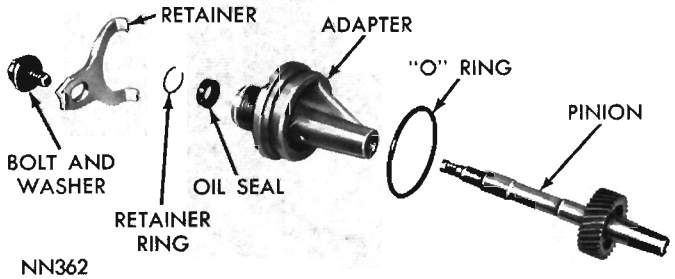

Fig. 27—Speedometer Drive

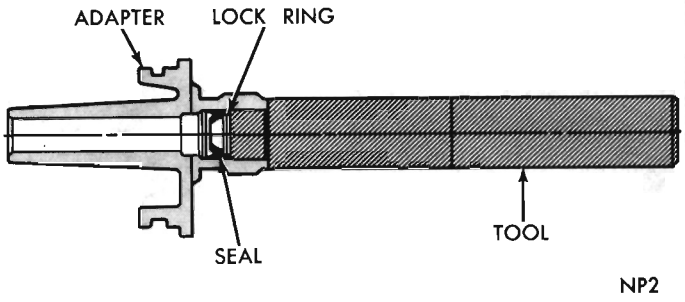

Fig. 28—Installing Speedometer Pinion Seal

(4) Note number of gear teeth and install speedometer pinion gear into adapter (Fig. 27).

(5) With proper gear tooth range number in 6 o'clock position, carefully press assembly into extension housing (Fig. 26).

(6) Install retainer and bolt, with retainer tangs in adapter positioning slots. Tap adapter firmly into the extension housing and tighten retainer bolt to 100 inch-pounds.

EXTENSION HOUSING YOKE SEAL

Replacement

(1) Disconnect propeller shaft at rear universal joint. Carefully pull shaft yoke out of the transmission extension housing.

CAUTION: Be careful not to scratch or nick ground surface on sliding spline yoke during removal and installation of the shaft assembly.

(2) Remove the extension housing yoke seal (Fig. 29) with Tool C-3994 or C-3985.

(3) To install a new seal, position seal in opening of extension housing and drive it into the housing with Tool C-3995 or C-3972 (Fig. 30).

(4) Carefully guide front universal joint yoke into extension housing and on the mainshaft splines. Connect propeller shaft to rear axle pinion shaft yoke.

EXTENSION HOUSING AND OUTPUT SHAFT BEARING

Removal

(1) Disconnect propeller shaft at rear universal

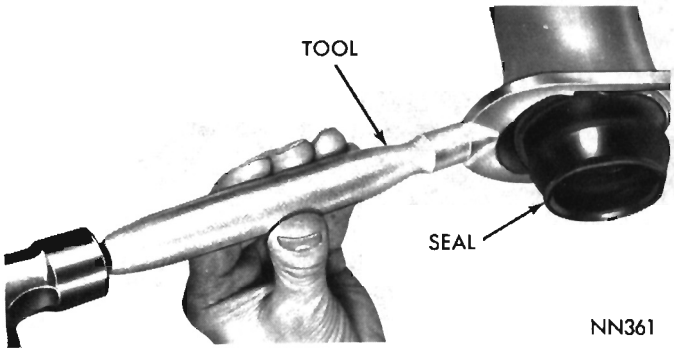

Fig. 29—Removing Extension Housing Yoke Seal

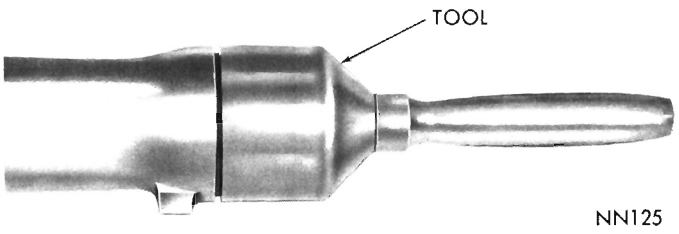

Fig. 30—Installing Extension Housing Yoke Seal

joint. Carefully pull shaft assembly out of the extension housing.

(2) Remove speedometer pinion and adapter assembly (Fig. 26). Drain approximately two quarts of fluid from the transmission.

(3) Remove bolts securing extension housing to the crossmember. Raise transmission slightly with service jack Tool C-3203A, then remove center crossmember and support assembly.

(4) Remove extension housing to transmission bolts.

Console Shift: Remove two bolts securing gearshift torque shaft lower bracket to extension housing. Swing bracket out of way for extension housing removal.

IMPORTANT: In removing or installing extension housing (step 5), the gearshift lever must be in "1" (low) position. This positions parking lock control rod rearward so it can be disengaged or engaged with the parking lock sprag.

(5) Remove two screws, plate and gasket from bottom of extension housing mounting pad. Spread large snap ring from output shaft bearing with Tool C-3301 (Fig. 31). With snap ring spread as far as possible, carefully tap extension housing off the output shaft bearing. Carefully pull extension housing rearward, to remove parking lock control rod knob past the parking sprag, then remove the housing.

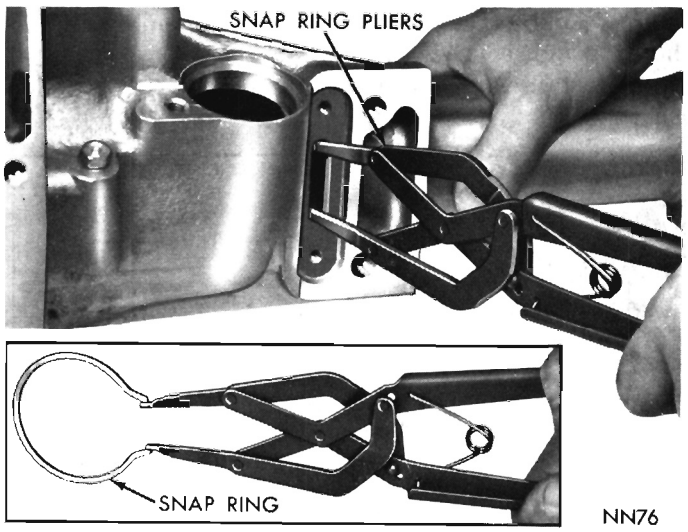

Fig. 31—Removing or Installing Extension Housing

Bearing Replacement

(1) Using heavy duty snap ring pliers C-4020, remove output shaft bearing rear snap ring and remove bearing from the shaft (Fig. 32).

(2) If removed, install snap ring in front groove on output shaft. Install a new bearing on shaft with outer race ring groove toward front (Fig. 32), then install rear snap ring. **To replace the extension housing bushing, refer to INDEX.**

Installation

(1) Place a new extension housing gasket on the transmission case. Position output shaft bearing retaining snap ring in extension housing. Slide extension housing on output shaft guiding the parking lock control rod knob past the parking sprag. While spreading large snap ring in housing with Tool C-3301A (Fig. 31), carefully tap housing into place, then release the snap ring. Make sure snap ring is fully seated in bearing outer race ring groove.

(2) Install and tighten extension housing bolts to 24 foot-pounds.

(3) Install gasket, plate and two screws on bottom of the extension housing mounting pad.

(4) Install center crossmember and rear mount assembly, tighten retaining bolts to 90 foot-pounds. Lower transmission, install extension housing to support bolts and tighten to 40 foot-pounds.

Console Shift: Align gearshift torque shaft lower bracket with the extension housing. Install the two retaining bolts and tighten securely.

(5) Install the speedometer pinion and adapter.

(6) Carefully guide front universal joint yoke into extension housing and on the output shaft splines. Connect propeller shaft to rear axle pinion shaft yoke.

(7) Add fluid to transmission to bring up to proper level.

GOVERNOR

Removal

(1) Remove extension housing and output shaft bearing.

(2) Carefully pry snap ring from weight end of

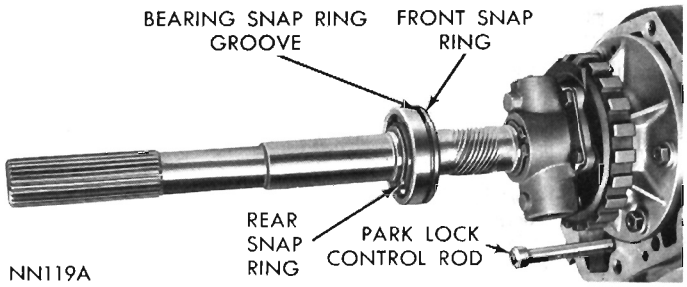

Fig. 32—Output Shaft Bearing

governor valve shaft (Fig. 33). Slide valve and shaft assembly out of governor body.

(3) Remove large snap ring from weight end of governor body, lift out governor weight assembly.

(4) Remove snap ring from inside governor weight, remove inner weight and spring from the outer weight. Figure 34 shows a disassembled view of the governor assembly.

(5) Remove snap ring from behind governor body, then slide governor and support assembly off the output shaft. If necessary remove the four bolts and separate governor body from the support.

Cleaning and Inspection

The primary cause of governor operating failure is due to a sticking governor valve or weights. Rough surfaces may be removed with crocus cloth. Thoroughly clean all parts in clean solvent and inspect for free movement before assembly.

Installation

(1) Assemble governor body to the support (if disassembled) and tighten bolts finger tight. Make sure oil passage of governor body aligns with passage in the support.

(2) Position support and governor assembly on the output shaft. Align assembly so valve shaft hole in governor body aligns with hole in the output shaft, then slide assembly into place. Install snap ring behind governor body (Fig. 33). Tighten the body to support bolts to 100 inch-pounds. Bend ends of lock straps over bolt heads.

(3) Assemble governor weights and spring, and secure with snap ring inside of large governor weight. Place weight assembly in governor body and install snap ring.

(4) Place governor valve on the valve shaft, insert assembly into the body and through governor weights.

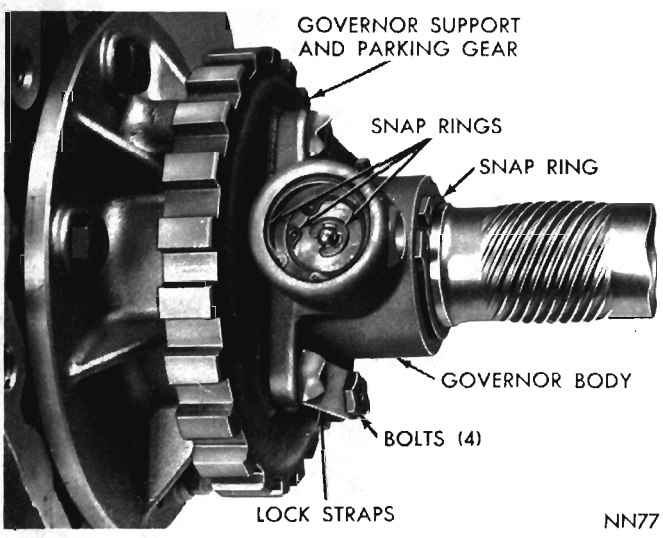

Fig. 33—Governor Shaft and Weight Snap Rings

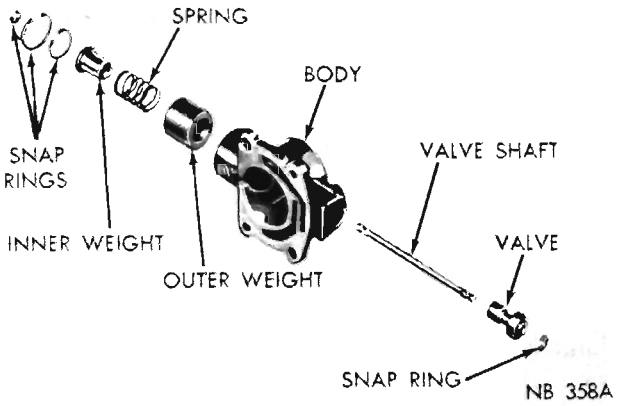

Fig. 34—Governor Assembly

Install valve shaft retaining snap ring. Inspect valve and weight assembly for free movement after installation.

(5) Install output shaft bearing and extension housing. Connect the propeller shaft.

PARKING LOCK COMPONENTS

Removal

(1) Remove extension housing.

(2) To replace the governor support and parking gear, refer to "Governor and Support".

(3) Slide shaft out of extension housing to remove the parking sprag and spring (Fig. 35). Remove snap ring and slide the reaction plug and pin assembly out of the housing.

(4) To replace the parking lock control rod, refer to "Valve Body—Removal and Installation."

Installation

(1) Position sprag and spring in the housing and insert the shaft (Fig. 35). Make sure square lug on sprag is toward parking gear, and spring is positioned so it moves sprag away from the gear.

(2) Install reaction plug and pin assembly in the housing and secure with snap ring.

(3) Install extension housing and connect propeller shaft.

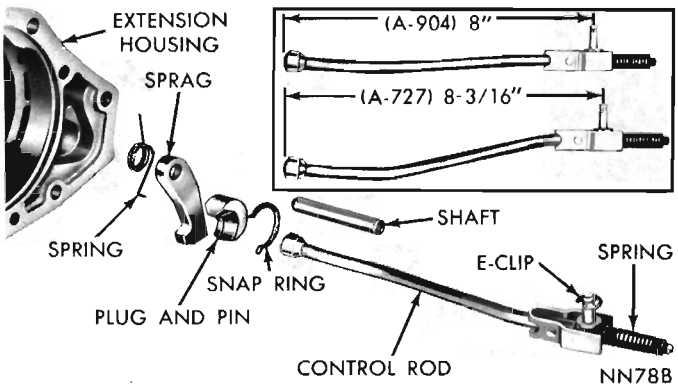

Fig. 35—Parking Lock Components

VALVE BODY ASSEMBLY AND ACCUMULATOR PISTON

Removal

(1) Raise vehicle on a hoist.

(2) Loosen oil pan bolts, tap the pan to break it loose allowing fluid to drain, then remove oil pan.

(3) Disconnect throttle and gearshift linkage from levers on the transmission. Loosen clamp bolts and remove the levers (Fig. 7).

(4) Remove E-clip (Fig. 36), securing parking lock rod to the valve body manual lever.

(5) Remove Back-Up Light and Neutral Start Switch.

(6) Place a drain pan under transmission, then remove the ten hex-head valve body to transmission case bolts. Hold valve body in position while removing the bolts.

(7) While lowering valve body down out of transmission case, disconnect parking lock rod from the lever.

To remove parking lock rod, pull it forward out of the case. If necessary, rotate propeller shaft to align parking gear and sprag to permit knob on end of control rod to pass the sprag.

(8) Withdraw accumulator piston from the transmission case. Inspect piston for scoring, and rings for wear or breakage. Replace as required.

(9) If valve body manual lever shaft seal requires replacement, drive it out of the case with a punch.

(10) Drive a new seal into the case with a 15/16 inch socket and hammer (Fig. 37).

Servicing the valve body assembly is outlined under "Recondition Sub-Assemblies".

Installation

(1) Make sure Back-Up Light and Neutral Start Switch has been removed. If parking lock rod was removed, insert it through opening in rear of case with knob positioned against the plug and sprag. Move front end of rod toward center of transmission while exerting rearward pressure on the rod to force it past the sprag. (Rotate propeller shaft if necessary.)

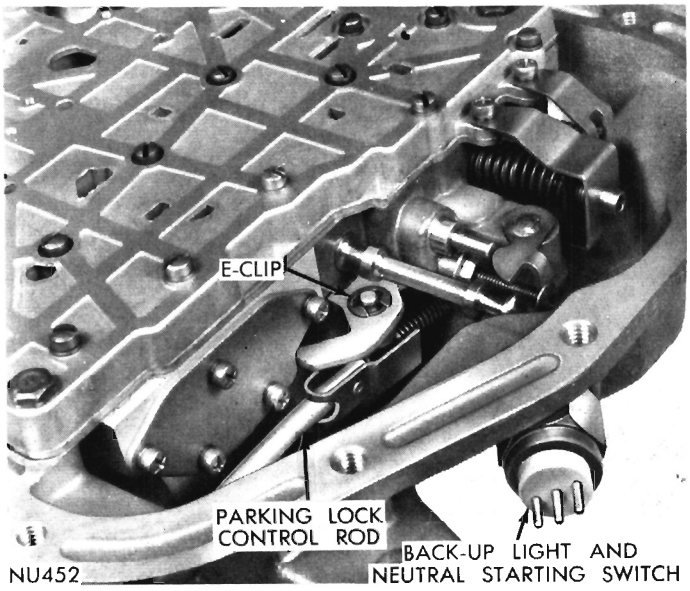

Fig. 36—Parking Lock Control Rod Retaining E-Clip

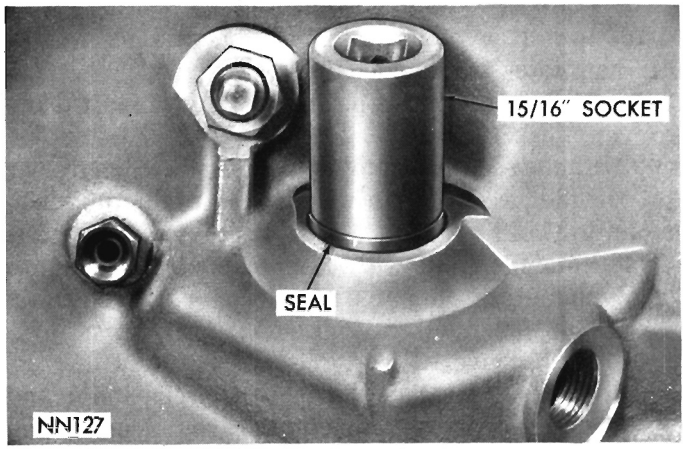

Fig. 37—Installing Valve Body Manual Lever Shaft Oil Seal

(2) Install accumulator piston in the transmission case.

(3) Position accumulator spring on the valve body.

(4) Place valve body manual lever in **LOW** position. Lift valve body into its approximate position, connect parking lock rod to manual lever and secure with E-clip. Position valve body in the case, install retaining bolts finger tight.

(5) With neutral starting switch installed, place manual lever in the neutral position. Shift valve body if necessary to center neutral finger over the neutral switch plunger. Snug bolts down evenly, then tighten to 100 inch-pounds.

(6) Install gearshift lever and tighten clamp bolt. Check lever shaft for binding in the case by moving lever through all detent positions. If binding exists, loosen valve body bolts and re-align.

(7) Make sure throttle shaft seal is in place, then install flat washer, lever and tighten the clamp bolt. Connect throttle and gearshift linkage and adjust as required.

(8) Install oil pan, using a new gasket. Add transmission fluid to bring it up to proper level.

SERVICE OUT OF VEHICLE

TRANSMISSION AND CONVERTER REMOVAL

The transmission and converter must be removed as an assembly; otherwise, the converter drive plate, pump bushing, and oil seal will be damaged. The drive plate will not support a load; therefore, none of the weight of the transmission should be allowed to rest on the plate during removal.

(1) Connect a remote control starter switch, Tool C-763 to starter solenoid and position switch so engine can be rotated from under the vehicle.

(2) Disconnect high tension wire from the distributor cap.

(3) Remove cover plate from in front of converter to provide access to the converter drain plug and mounting bolts.

(4) Rotate engine with remote control switch to bring the drain plug to "6 o'clock" position. Drain torque converter and transmission.

(5) Mark converter and drive plate to aid in reassembly. The crankshaft flange bolt circle, inner and outer circle of holes in drive plate, and four tapped holes in front face of converter all have one hole offset so these parts will be installed in original position. This maintains the balance of engine and converter.

(6) Rotate engine with remote control switch to locate two converter to drive plate bolts at "5 and 7 o'clock" positions. Remove the two bolts, rotate engine with switch and remove the other two bolts. **Do not rotate converter or drive plate by prying with a screw driver or similar tool as the drive plate might become distorted. Also, starter should never be engaged if drive plate is not attached to converter with at least one bolt or if transmission case to engine bolts have been loosened.**

(7) Disconnect negative (ground) cable from the battery.

(8) Remove the starting motor assembly.

(9) Disconnect wire from the neutral starting switch.

(10) Disconnect gearshift rod from the transmission lever. Remove the gearshift torque shaft from transmission housing and left side rail.

Console Shift: Remove two bolts securing gearshift torque shaft lower bracket to the extension housing. Swing bracket out of way for transmission removal. Disconnect gearshift rod from the transmission lever.

(11) Disconnect throttle rod from throttle lever on the transmission.

(12) Disconnect oil cooler lines at transmission and remove oil filler tube. Disconnect the speedometer cable.

(13) Disconnect propeller shaft at rear universal joint. Carefully pull shaft assembly out of the extension housing.

(14) Remove rear mount to extension housing bolts.

(15) Install engine support fixture, Tool C-3487 (8 cyl. engine) or Tool C-3809 (6 cyl. engine) and raise the engine slightly (Fig. 38 or 39).

(16) Remove crossmember attaching bolts and remove the crossmember.

(17) Place a transmission service jack under transmission to support the assembly.

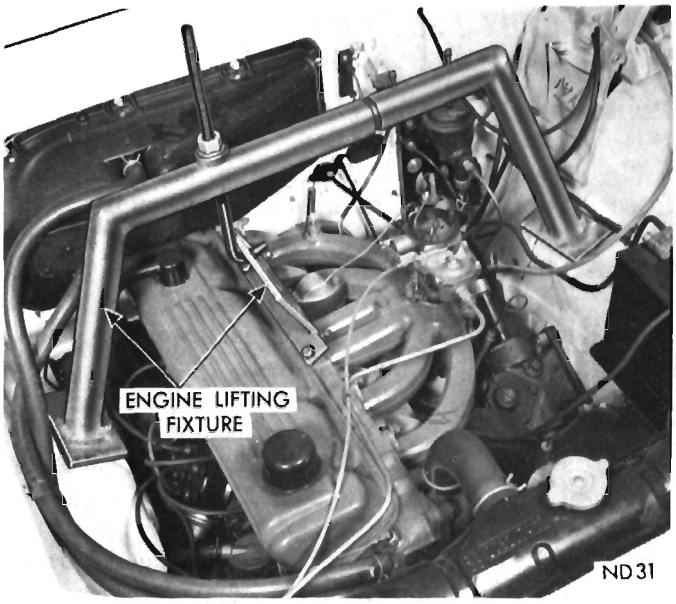

Fig. 38—Engine Lifting Fixture (6 Cyl. Engine)

(18) Attach a small "C" clamp to edge of bell housing to hold converter in place during removal of the transmission.

(19) Remove the bell housing retaining bolts. Carefully work transmission rearward off engine block dowels and disengage converter hub from end of the crankshaft.

(20) Lower transmission jack and remove transmission and converter assembly.

(21) To remove converter assembly, remove "C" clamp from edge of bell housing, then carefully slide assembly out of the transmission.

STARTER RING GEAR REPLACEMENT

The starter ring gear is mounted directly on outer diameter of the torque converter front cover. With torque converter removed from vehicle, replacement of the gear is as follows:

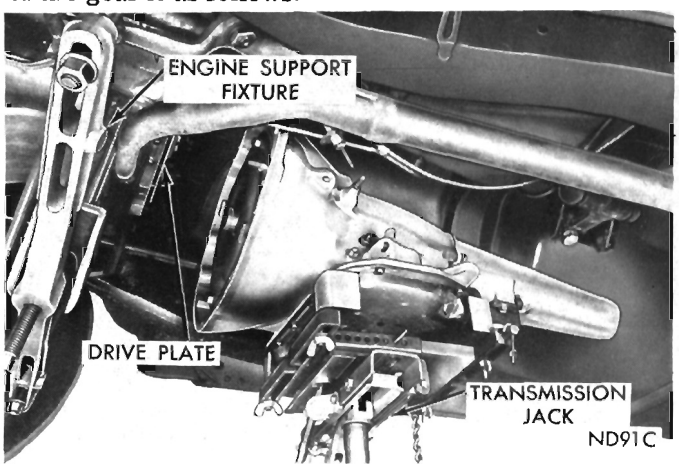

Fig. 39—Engine Lifting Fixture (8-Cyl. Engine)

Removal

(1) Cut through weld material at rear side of ring gear with a hack saw or grinding wheel (Fig. 40). Be careful not to cut or grind into front cover stamping.

(2) Scribe a heavy line on front cover next to front face of ring gear to aid in locating the new gear.

(3) Support converter with the four lug faces resting on blocks of wood. **The converter must not rest on the front cover hub during this operation.** Using a blunt chisel or drift and hammer, tap downward on ring gear near welded areas to break any remaining weld material (Fig. 40). Tap around ring gear until it comes off the converter.

(4) Smooth off weld areas on the cover with a file.

Installation

Any of the following methods may be used to heat and expand starter ring gear for installation on the converter:

Oven: Place ring gear in Oven C-794 and set temperature at 200 degrees F. Allow ring gear to remain in oven for 15 to 20 minutes.

Boiling Water: Place ring gear in a shallow container, add water, and heat for approximately eight minutes after water has come to a boil.

Steam: Place ring gear on a flat surface and direct a steam flow around gear for approximately two minutes.

Flame: Place ring gear squarely on a flat surface. Using a medium size tip, direct a slow flame evenly around inner rim of the gear. **Do not apply flame to the gear teeth.** Place a few drops of water on face of gear at intervals during heating process. When gear is hot enough to just boil the water, installation of gear on the torque converter can be made.

(1) After ring gear is expanded by heating, place the gear in position on converter front cover. Tap gear on the cover evenly with a plastic or rawhide mallet until face of gear is even with scribed line (made during removal) on the front cover. Make sure gear is even with scribed line around full circumference of the front cover.

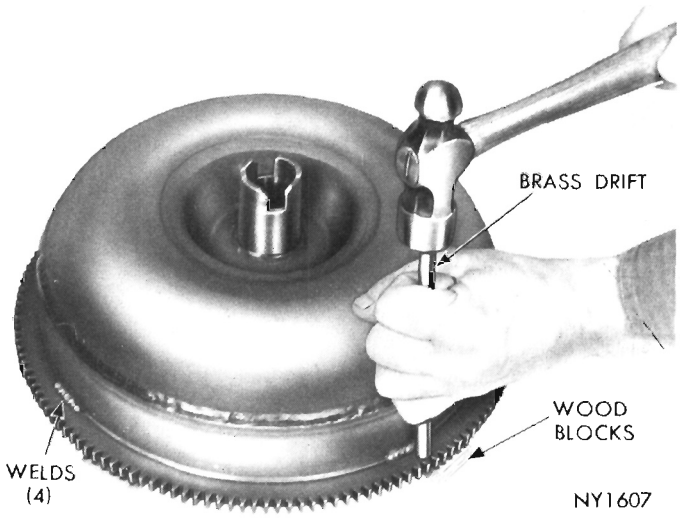

Fig. 40—Removing Starter Ring Gear

(2) Reweld ring gear to torque converter front cover, being careful to place, as nearly as possible, same amount of weld material in exactly same location as was used in original weld. This is necessary in order to maintain proper balance of the unit. Place welds alternately on opposite sides of converter to minimize distortion.

(3) The following suggestions are offered as an aid in making the weld:

a. **Do not gas weld.**

b. Use a D.C welder that is set at straight polarity or an A.C welder if the proper electrode is available.

c. Use a 1/8 inch diameter welding rod, and a welding current of 80 to 125 amps.

d. Direct the arc at intersection of the gear and front cover from an angle of 45 degrees from rear face of the gear.

(4) Inspect gear teeth and remove all nicks where metal is raised, weld metal splatter, etc., in order to ensure quiet starter operation.

TORQUE CONVERTER FLUSHING

When a transmission failure has contaminated the fluid, the torque converter should be flushed to insure that metal particles or sludged oil are not later transferred back into the reconditioned transmission.

HAND FLUSHING

(1) Place converter in horizontal position and pour two quarts of new clean solvent or kerosene into converter through the impeller hub.

(2) Turn and shake converter so as to swirl solvent through the internal parts. **Turn the turbine and stator with transmission input and reaction shafts to dislodge foreign material.**

(3) Position converter in its normal operation position with drain plug at the lowest point. Remove drain plug and drain solvent. Rotate turbine and stator, and shake converter while draining to prevent dirt particles from settling.

(4) Repeat flushing operation at least once, or as many times as required until solvent or kerosene drained out is clear.

(5) After flushing, shake and rotate converter several times with drain plug out to remove any residual solvent and dirt. **Flush any remaining solvent from converter with two quarts of new transmission fluid.** This will prevent any adverse effect the solvent may have on the transmission seals. Reinstall drain plug and tighten to 110 inch-pounds.

(6) Flush and blow out the oil cooler and its lines.

MACHINE FLUSHING

Machine cleaning is recommended; using the type which rotates the converter while pumping cleaning fluid through it. The machine automatically adds timed blasts of compressed air to the cleaning fluid as it enters the converter, providing more thorough cleaning than the hand flushing operation.

FLUID LEAKAGE—TRANSMISSION CONVERTER HOUSING AREA

(1) **Check for Source of Leakage**

Since fluid leakage at or around the converter area may originate from an engine oil leak, the area should be examined closely. Transmission fluid is dyed red and, therefore, can be distinguished from engine oil.

(2) **Prior to removing the transmission, perform the following checks:**

When leakage is determined to originate from the transmission, check fluid level and torque converter drain plug torque prior to removal of the transmission and torque converter.

High oil level can result in oil leakage out the vent located at the top of the front pump housing. If the fluid level is high, adjust to proper level.

Oil leakage can also occur at the torque converter drain plug. Torque the drain plug to 110 inch-pounds.

After performing these two operations, re-check for leakage. If a leak persists, the transmission and torque converter assembly must be removed for repair.

(3) **Remove transmission and torque converter assembly.**

(4) **Check torque converter assembly for leakage.** See "Torque Converter Leak Check". If no leak is found, proceed to step (5).

(5) **Service Transmission Converter Housing Area**

(a) Replace torque converter hub seal—inspect torque converter hub for roughness or damage.

(b) Check pump housing bolt torque and tighten to 175 inch-pounds.

(c) Replace kickdown lever shaft plug, and apply thread sealer—Chrysler Parts Sealing Compound P.N. 1057794 or equivalent.

TORQUE CONVERTER LEAK CHECK

If fluid leakage has occurred in the bell housing area, the torque converter can be leak checked as follows after removal from the transmission:

(1) Drain all oil from the converter. If flushing is required, flush before checking for leakage.

(2) Install tool C-4102 and tighten.

(3) Apply a maximum of 100 psi air pressure to the converter.

(4) Submerge the converter in a tank of water and observe the hub, cup, ring gear, and seam welds for bubbles. Five to ten minutes may be required for bubbles to develop from small leaks.

If no bubbles are observed, it can be assumed that the welds are not leaking. If leakage occurs, the converter should be replaced.

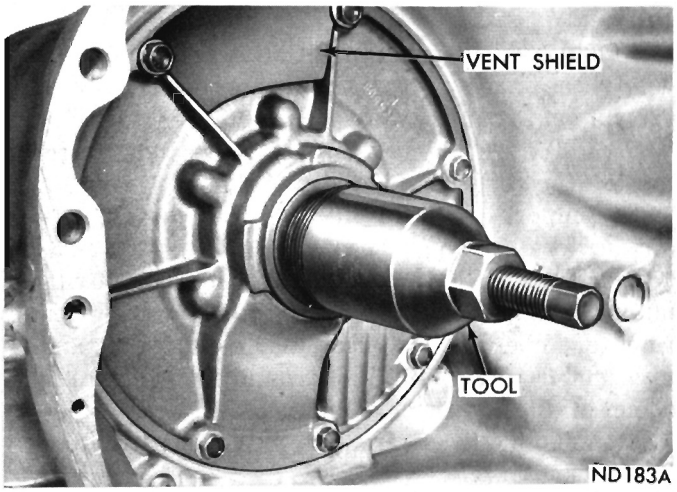

Fig. 41—Removing Pump Oil Seal

PUMP OIL SEAL

Replacement

The pump oil seal can be replaced without removing pump and reaction shaft support assembly from the transmission case. **The vent shield shown in (Figs. 41 and 42) is not used or required on the A-904 pumps.**

(1) **A-904:** Screw seal remover Tool C-3758 into seal (Fig. 41), then tighten screw portion of tool to withdraw the seal.

A-727: Using Tool C-3861, remove seal in the same manner.

(2) **A-904:** To install a new seal, place seal in opening of the pump housing (lip side facing inward).

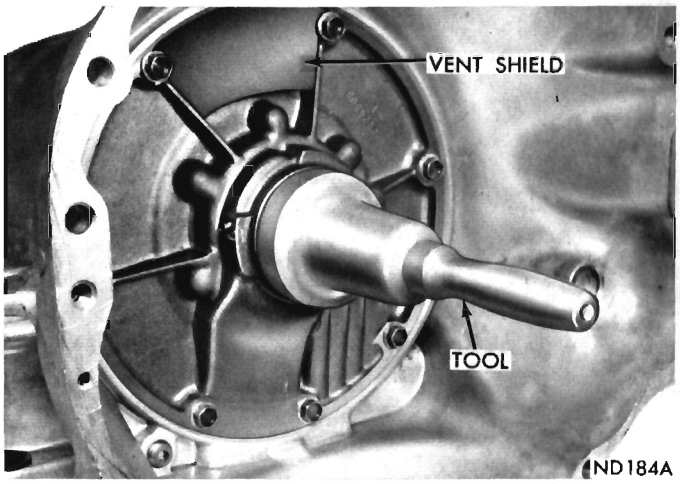

Fig. 42—Installing Pump Oil Seal

Using Tool C-3757, drive seal into housing until tool bottoms (Fig. 42).

A-727: Using Tool C-3860, install new seal in the same manner.

DISASSEMBLY—SUB-ASSEMBLY REMOVAL

Prior to removing any transmission sub-assemblies, plug all openings and thoroughly clean exterior of the unit, preferably by steam. Cleanliness through entire disassembly and assembly cannot be over-emphasized. When disassembling, each part should be washed in a suitable solvent, then dried by compressed air. **Do not wipe parts with shop towels.** All mating surfaces in the transmission are accurately machined; therefore, careful handling of parts must be exercised to avoid nicks or burrs.

Drive Train End Play

Measuring drive train end play before disassembly will usually indicate when a thrust washer change is required, (except when major parts are replaced). **The thrust washer is located between reaction shaft support and front clutch retainer on A-727 transmissions. The thrust washer is located between input and output shafts on A-904 transmissions.**

(1) Attach a dial indicator to transmission bell housing with its plunger seated against end of input shaft (Fig. 43). Move input shaft in and out to obtain end play reading. End play specifications are .030 to .089 inch for A-904 transmissions, and .037 to .084 inch for A-727 transmissions.

(2) Record indicator reading for reference when reassembling the transmission.

Oil Pan

(1) Place transmission assembly in repair stand, Tool C-3750, for 6 Cyl. engines. For 8 Cyl. engines use adapter C-3882, with repair stand to support these transmissions (Fig. 44).

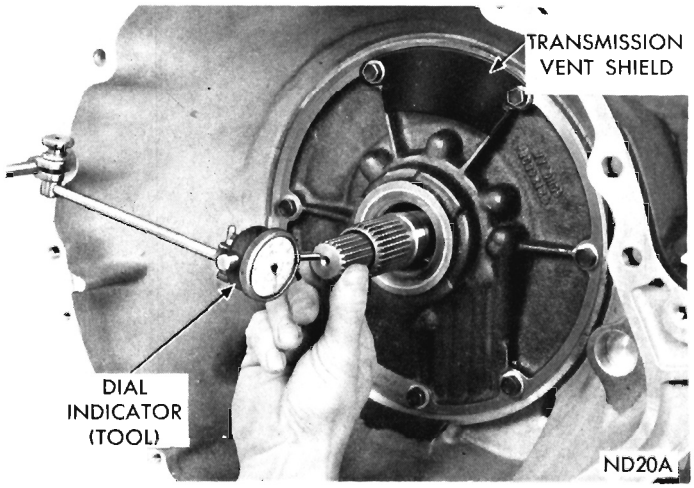

Fig. 43—Measuring Drive Train End Play

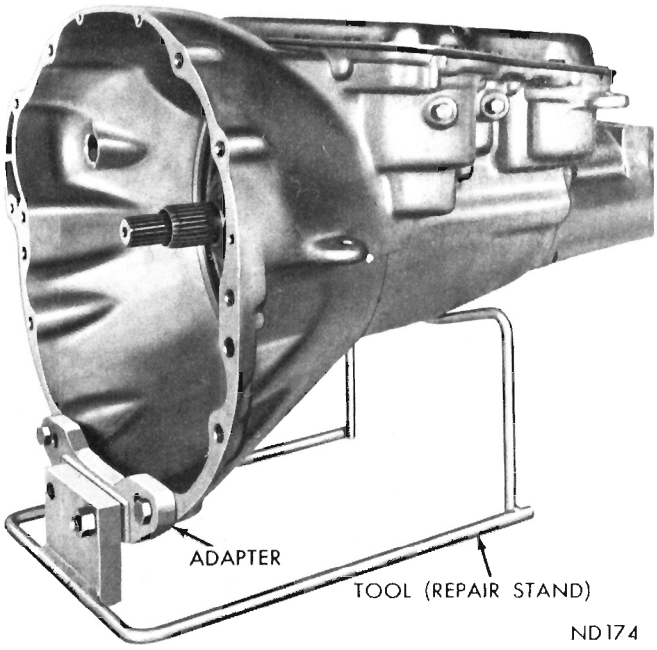

Fig. 44—Transmission Installed in Repair Stand

If repair stand DD-1014 is available, fabricate two attaching brackets (Fig. 45) and install transmission in the stand (Fig. 46), file out the 7/16 inch holes if necessary to obtain bracket alignment. This stand provides easier disassembly and assembly as the transmission can be rotated as desired.

(2) Unscrew oil pan bolts and remove oil pan and gasket.

Valve Body Assembly

(1) Loosen clamp bolts and remove throttle and gearshift levers from the transmission.

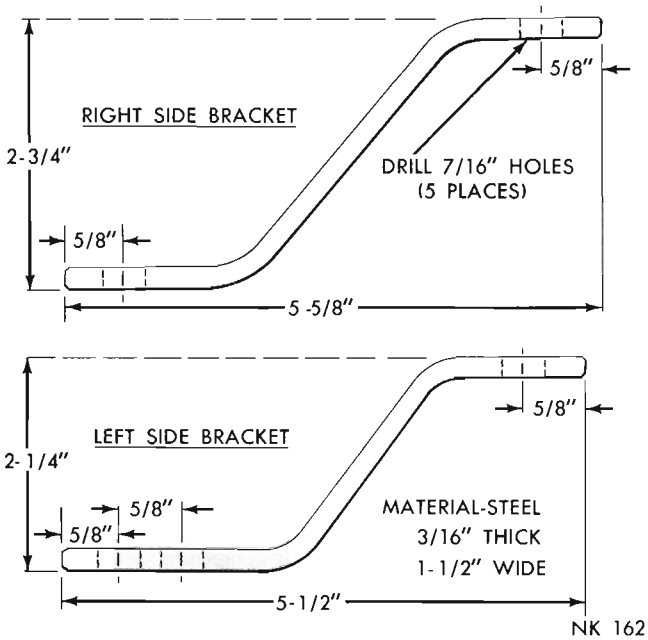

Fig. 45—Repair Stand Bracket Dimensions

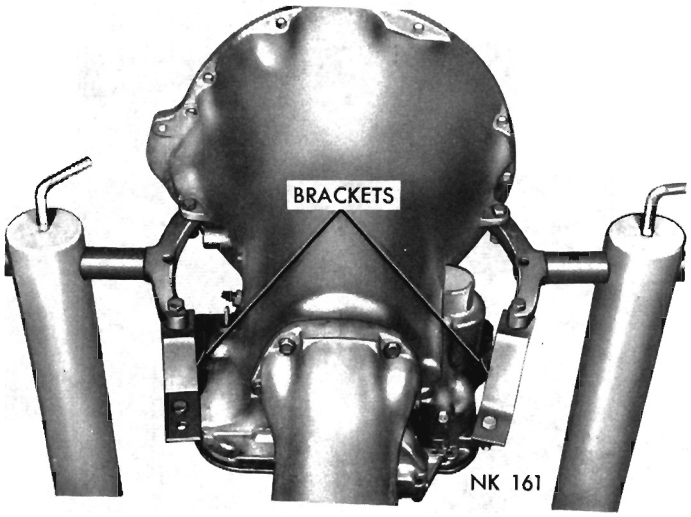

Fig. 46—Transmission Installed in Repair Stand (Tool DD-1014)

(2) Remove Back-Up Light and Neutral Start Switch.

(3) Remove the ten hex-head valve body to transmission bolts. Remove E-clip securing parking lock rod to the valve body manual lever (Fig. 36).

(4) While lifting valve body upward out of transmission case, disconnect parking lock rod from the lever.

Accumulator Piston and Spring

(1) Lift spring off accumulator piston and withdraw piston from the case.

Extension Housing

Before removing extension housing, pull parking lock rod forward out of the case. Rotate propeller shaft if necessary to align parking gear and sprag to permit knob on end of control rod to pass the sprag.

(1) Remove speedometer pinion and adapter assembly.

(2) Remove extension housing to transmission bolts.

(3) Remove two screws, plate and gasket from bottom of extension housing mounting pad. Spread large snap ring from output shaft bearing with Tool C-3301A (Fig. 31). With snap ring spread as far as possible, carefully tap extension housing off the output shaft and bearing.

(4) Using heavy duty snap ring pliers C-4020, remove output shaft bearing rear snap ring. Remove bearing from shaft, then remove front snap ring.

Governor and Support

(1) Carefully pry snap ring from weight end of governor valve shaft (Fig. 33). Slide valve and shaft assembly out of the governor body.

(2) Remove snap ring from behind governor body, then slide governor body and support assembly off the output shaft.

Oil Pump and Reaction Shaft Support

(1) **Tighten front band adjusting screw until band is tight on front clutch retainer.** This prevents clutch retainer from coming out with pump which might cause unnecessary damage to the clutches.

(2) Remove oil pump housing retaining bolts.

(3) Attach Tool C-3752 to pump housing flange, (Fig. 47), in threaded holes in the flange.

(4) Bump outward evenly on the two "knocker weights" to withdraw pump and reaction shaft support assembly from the case.

Front Band and Front Clutch

(1) Loosen front band adjuster, remove band strut and slide band out of the case.

(2) Slide front clutch assembly out of the case.

Input Shaft and Rear Clutch

(1) Grasp input shaft, and slide input shaft and rear clutch assembly out of the case.

CAUTION: Be careful not to lose thrust washer located between rear end of input shaft and forward end of the output shaft.

Planetary Gear Assemblies, Sun Gear and Driving Shell

(1) While supporting output shaft and driving shell, carefully slide assembly forward and out through the case.

CAUTION: Be very careful not to damage ground surfaces on output shaft during removal.

Rear Band and Low-Reverse Drum

(1) Remove low-reverse drum, then loosen rear band adjuster, remove band strut and link, then remove band from the case.

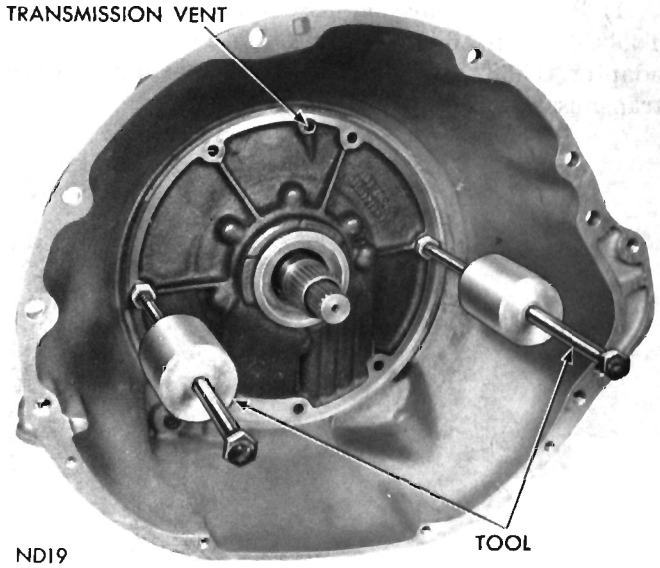

Fig. 47—Removing Pump and Reaction Shaft Support Assembly

(A-904-LA Double Wrap Band): loosen band adjusting screw then remove band and low-reverse drum.

Overrunning Clutch

(1) Note position of overrunning clutch rollers and spring before disassembly to assist in reassembly.

(2) Carefully slide out clutch hub and remove rollers and springs. **If the overrunning clutch cam and/or roller spring retainer are found damaged or worn, refer to INDEX for replacement procedures.**

Kickdown Servo

(1) Compress kickdown servo spring by using engine valve spring compressor, Tool C-3422, then remove snap ring (Fig. 48).

(2) Remove rod guide, springs and piston rod from the case. Be careful not to damage piston rod or guide during removal.

(3) Insert Tool C-484 inside piston and withdraw piston from the transmission case.

Low and Reverse Servo

(1) Compress low and reverse servo piston spring by using engine valve spring compressor, Tool C-3422, then remove the snap ring.

(2) Remove spring retainer, spring, and servo piston and plug assembly from the case.

RECONDITION SUB-ASSEMBLIES

The following procedures cover disassembly, inspection, repair, and assembly of each sub-assembly as removed from the transmission.

Heli-Coil inserts are recommended for repairing damaged, stripped or worn threads in aluminum parts.

Pre-sized service bushings are available for replacement for most all bushings in the TorqueFlite transmission. The two bushings in sun gear are not serviced because of the low cost of sun gear assembly. If bushings are found worn or scored, they should be replaced as outlined in the following reconditioning procedures.

The bushing replacement tools listed by "SP" numbers are part of Tool Kit C-3887.

The use of crocus cloth is permissible where necessary, providing it is used carefully. When used on valves, use extreme care to avoid rounding off the sharp edges. The sharp edge is vitally important to this type of valve. Sharp edges prevent dirt and foreign matter from getting between the valve and body, thus reducing possibility of sticking. When it becomes necessary to recondition transmission, and vehicle has accumulated considerable mileage, install new seal rings on parts requiring their usage. **Coat each part with Automatic Transmission Fluid AQ-ATF Suffix "A" or (Dexron) during assembly.**

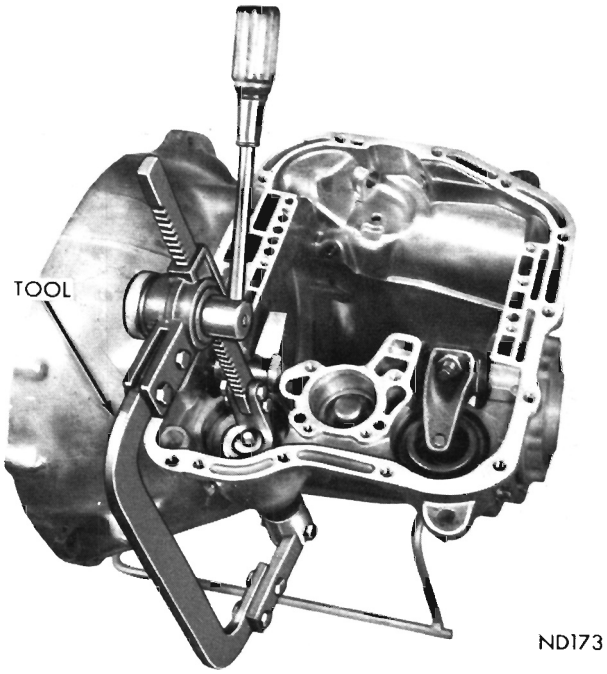

Fig. 48—Compressing Kickdown Servo Spring

VALVE BODY ASSEMBLY

CAUTION: Never clamp any portion of valve body or transfer plate in a vise. Any slight distortion of the aluminum body or transfer plate will result in sticking valves, excessive leakage or both. When removing or installing valves or plugs, slide them in or out carefully. Do not use force.

Rework valve body repair stand, Tool C-3749 by drilling the 5/16 inch diameter hole to 7/8, and 3/4 inch deep (Fig. 49). The stand can then be used with either the old or new type valve bodies.

Disassembly

(1) Place valve body assembly on repair stand, Tool

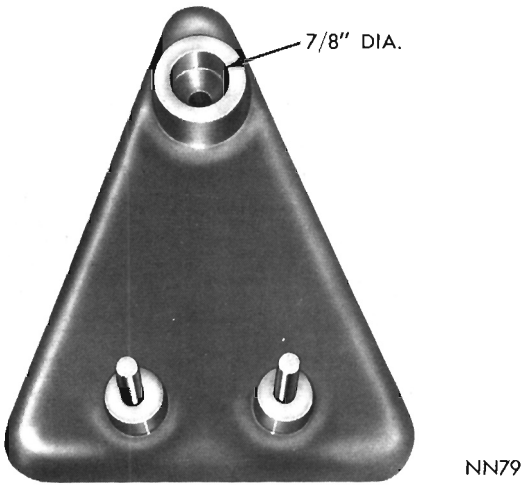

Fig. 49—Rework Valve Body Repair Stand

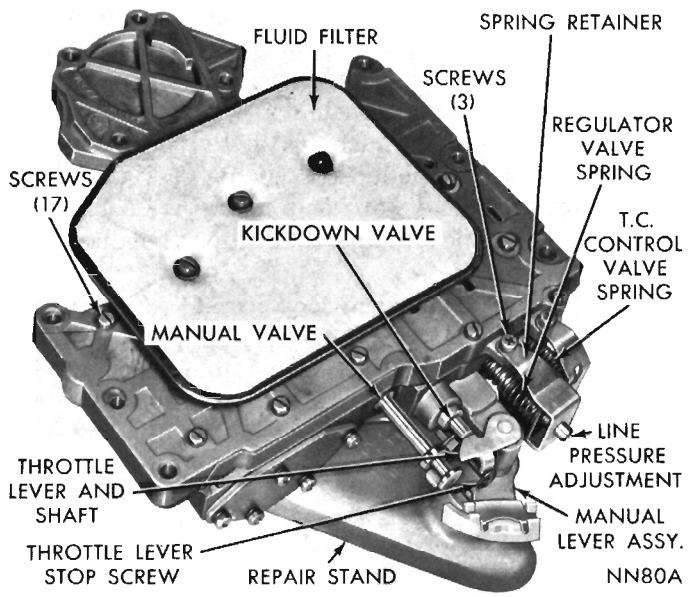

Fig. 50—Valve Body and Control Assembly

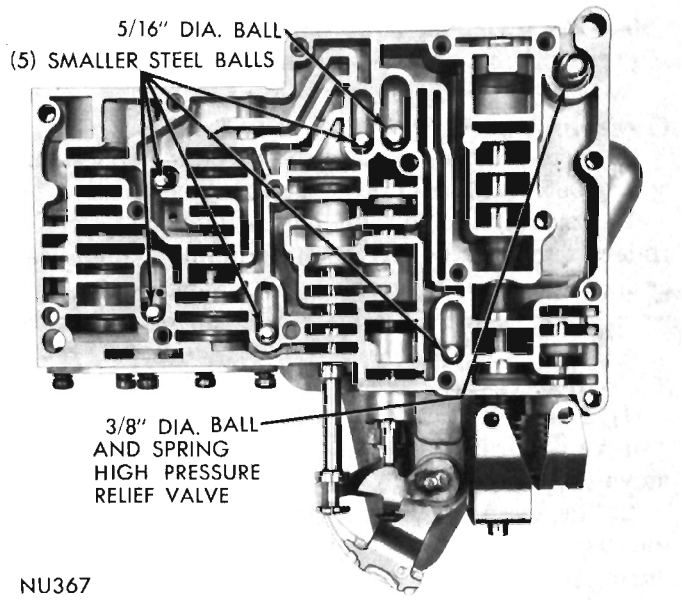

Fig. 52—Steel Ball Location

C-3749, (Fig. 50). Remove three screws from fluid filter and lift off the filter.

(2) While holding spring retainer firmly against the spring force, remove the three bracket retaining screws (Fig. 50).

(3) Remove spring retainer, torque converter control valve spring, and regulator valve spring with line pressure adjusting screw assembly. **Do not alter setting of line pressure adjusting screw and nut. The nut has an interference thread and does not turn easily on the screw.**

(4) Slide regulator valve out of valve body. Slide torque converter control valve out of valve body.

(5) Remove the transfer plate retaining screws. Carefully lift transfer plate and steel separator plate assembly off the valve body.

(6) Invert transfer plate assembly and remove the stiffener plate. Remove remaining screws securing separator plate to transfer plate, and carefully lift off separator plate (Fig. 51).

(7) Remove and note location of 7 steel balls and 1 spring in valve body (Fig. 52). **CAUTION: Do Not mix up the two larger balls.** The 3/8 inch diameter ball goes on the spring in the corner and is the high pressure relief valve. The 5/16 diameter ball in the large chamber is the front clutch ball check.

(8) Invert valve body and lay it on a clean cloth or paper. Remove E-clip and washer from throttle lever shaft (Fig. 53). Remove any burrs from shaft, then while holding manual lever detent ball and spring in their bore with Tool C-3765 or similar tool, slide manual lever off the throttle shaft. Remove the detent ball and spring.

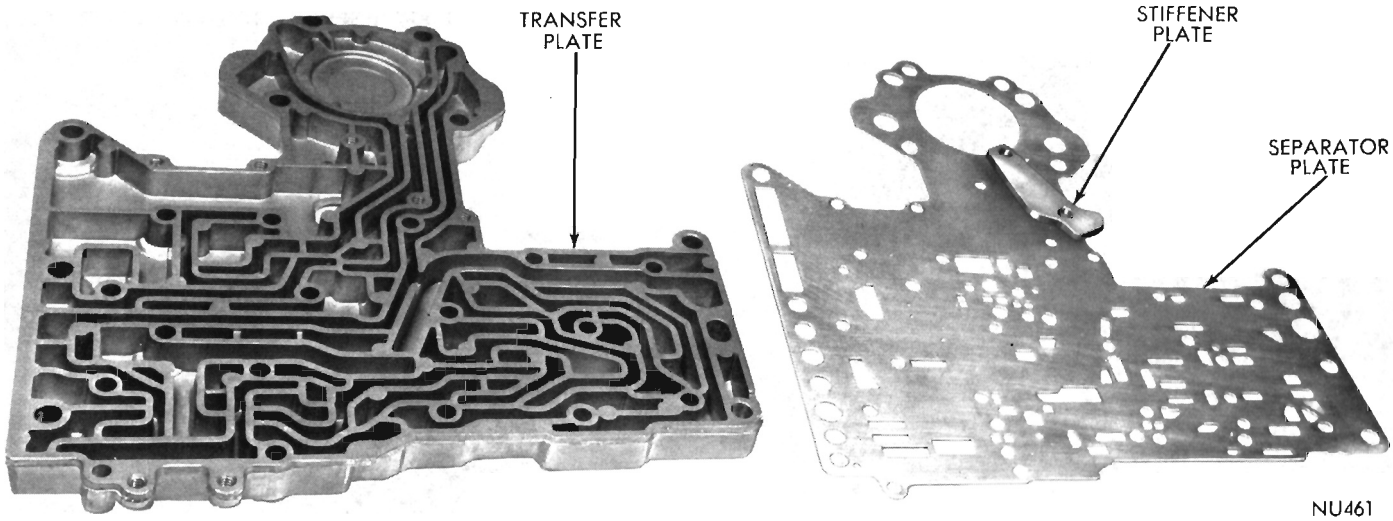

Fig. 51—Transfer and Separator Plate

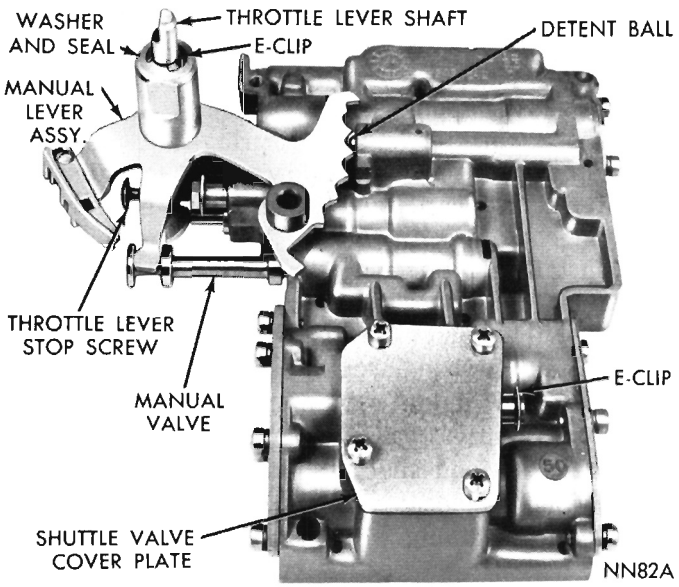

Fig. 53—Valve Body Controls (Assembled View)

(9) Remove manual valve, carefully slide it out of valve body with a rotating motion.

(10) Remove throttle lever and shaft from the valve body.

(11) Remove shuttle valve cover plate (Fig. 53). Remove E-clip from exposed end of the shuttle valve.

(12) Remove throttle lever stop screw assembly (Fig. 54), be careful not to disturb setting any more than is necessary.

(13) Remove kickdown detent, kickdown valve, throttle valve spring and throttle valve (Fig. 54).

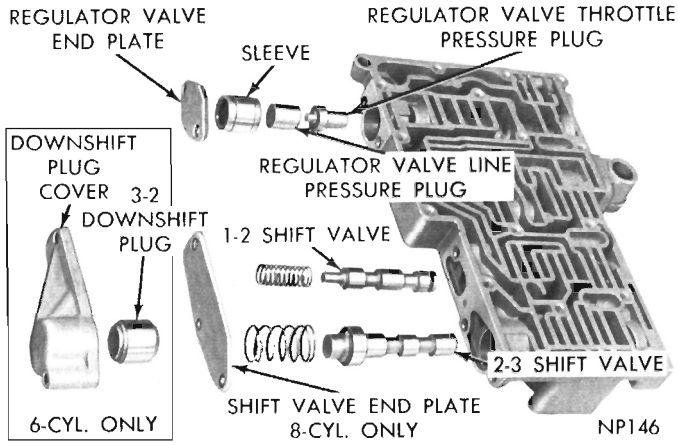

Fig. 55—Valve Body—Shift Valve Side—Disassembled

(14) Remove governor plug end plate (Fig. 54). Tip up valve body to allow shuttle valve throttle plug, spring, shuttle valve, and shift valve governor plugs to slide out into your hand.

Note longer stem on 1-2 shift valve plug as a means for identification.

(15) Remove shift valve end plate (Fig. 55) and slide out the two springs and valves.

Six Cylinder Vehicles: Remove downshift plug cover and plug, then slide out the two springs and valves.

(16) Remove regulator valve end plate. Slide regulator valve line pressure plug, sleeve, and regulator valve throttle pressure plug out of valve body.

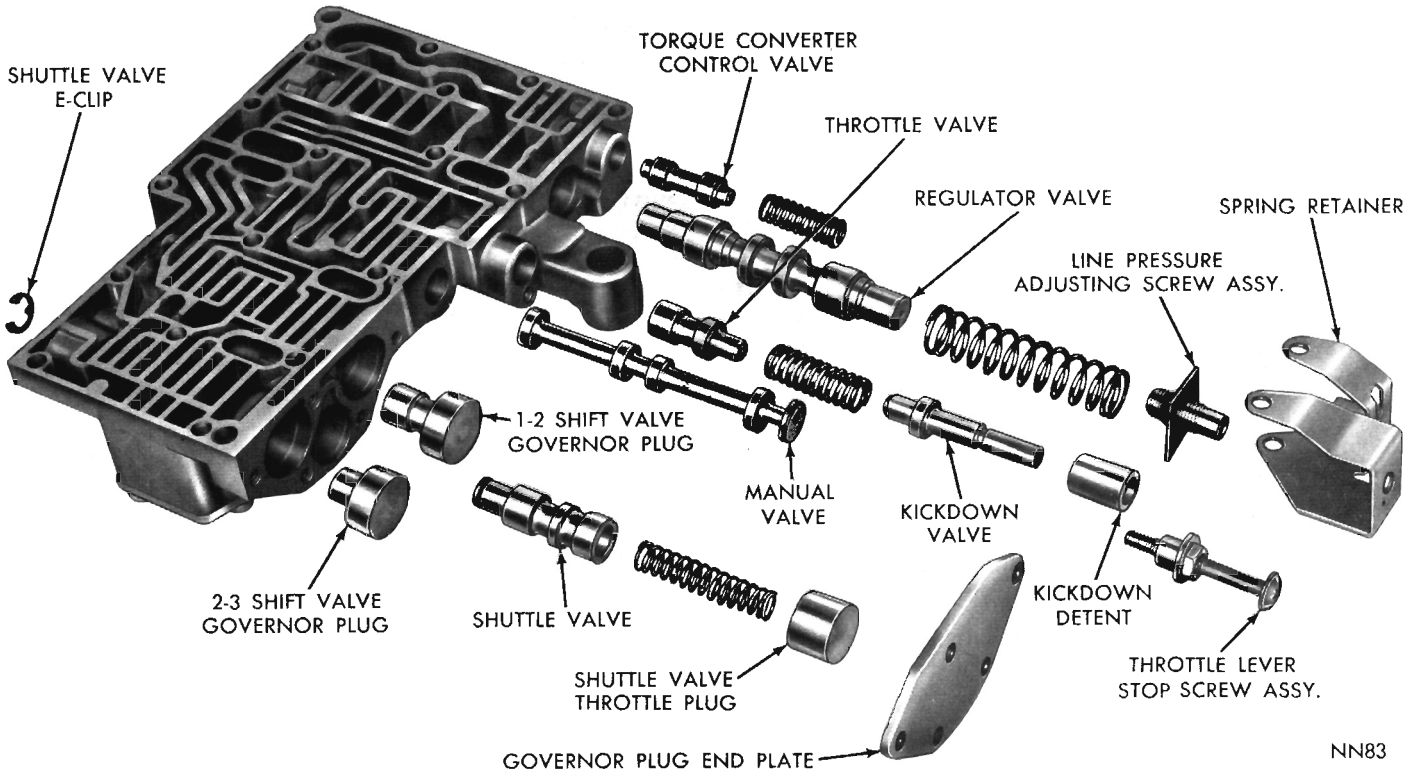

Fig. 54—Valve Body—Lever Side—Disassembled

Cleaning and Inspection

Allow all parts to soak a few minutes in a suitable clean solvent. Wash thoroughly and blow dry with compressed air. Make sure all passages are clean and free from obstructions.

Inspect manual and throttle valve operating levers and shafts for being bent, worn or loose. If a lever is loose on its shaft, it may be **silver soldered** only, or lever and shaft assembly should be replaced. **Do not attempt to straighten bent levers.**

Inspect all mating surfaces for burrs, nicks and scratches. Minor blemishes may be removed with crocus cloth, using only a very light pressure. Using a straight edge, Tool C-3335, inspect all mating surfaces for warpage or distortion. Slight distortion may be corrected, using a surface plate. Make sure all metering holes in steel plate are open. Using a pen light, inspect bores in valve body for scores, scratches, pits and irregularities.

Inspect all valve springs for distortion and collapsed coils. Inspect all valves and plugs for burrs, nicks and scores. Small nicks and scores may be removed with crocus cloth, providing extreme care is taken not to round off sharp edges. The sharpness of these edges is vitally important because it prevents foreign matter from lodging between valve and valve body, thus reducing possibility of sticking. Inspect all valves and plugs for freedom of operation in valve body bores. When bores, valves and plugs are clean and dry, the valves and plugs should fall freely in the bores. **The valve body bores do not change dimensionally with use. Therefore, a valve body that was functioning properly when vehicle was new, will operate correctly if it is properly and thoroughly cleaned. There is no need to replace valve body unless it is damaged in handling.**

Assembly

(1) Place separator plate on the transfer plate (Fig. 51). **Install stiffener plate and retaining screws exactly as shown.** Make sure all bolt holes are aligned, then tighten stiffener plate screws to 28 inch-pounds.

(2) Place 1-2 and 2-3 shift valve governor plugs in their respective bores (Fig. 54). Install shuttle valve, spring and shuttle valve throttle plug. Install governor plug end plate and tighten the five retaining screws to 28 inch-pounds.

(3) Install E-clip on end of shuttle valve (Fig. 54). Install shuttle valve cover plate and tighten the four retaining screws to 28 inch-pounds.

(4) Install 1-2 and 2-3 shift valves and springs (Fig. 55). Install shift valve end plate and tighten the three retaining screws to 28 inch-pounds.

Six Cylinder Vehicles: Install the 3-2 downshift plug and cover, tighten the three screws to 28 inch-pounds.

(5) Install regulator valve throttle pressure plug, sleeve, and line pressure plug (Fig. 55). Install regulator valve end plate and tighten the two retaining screws to 28 inch-pounds.

(6) Install throttle valve and spring (Fig. 54). Slide kickdown detent on the kickdown valve (counterbore side of detent toward valve), then install assembly in the valve body.

(7) Install throttle lever stop screw (Fig. 54), and tighten lock nut finger tight.

(8) Install manual valve in valve body (Fig. 54).

(9) Install throttle lever and shaft on valve body (Fig. 56). Insert detent spring and ball in its bore in valve body. Depress ball and spring with Tool C-3765 or similar tool and slide manual lever over throttle shaft so that it engages manual valve and detent ball. Install seal, retaining washer and E-clip on throttle shaft.

(10) Position valve body assembly on the repair stand.

(11) Place six steel balls in valve body chambers with large ball in the large chamber (Fig. 52). Install spring and high pressure relief valve ball (3/8″ dia.).

(12) Position transfer plate assembly on valve body. Install retaining screws, starting at center and working outward, tighten screws to 35 inch-pounds.

(13) Install torque converter valve and regulator valve (Fig. 54).

(14) Position torque converter valve spring and regulator valve spring over ends of their respective valves. Place line pressure adjusting screw assembly on end of regulator valve spring with long dimension of nut at right angles to valve body (Fig. 50).

(15) Install spring retainer, making sure converter valve spring is engaged on the tang and position squarely in retainer. Tighten the three retaining screws to 28 inch-pounds (Fig. 50).

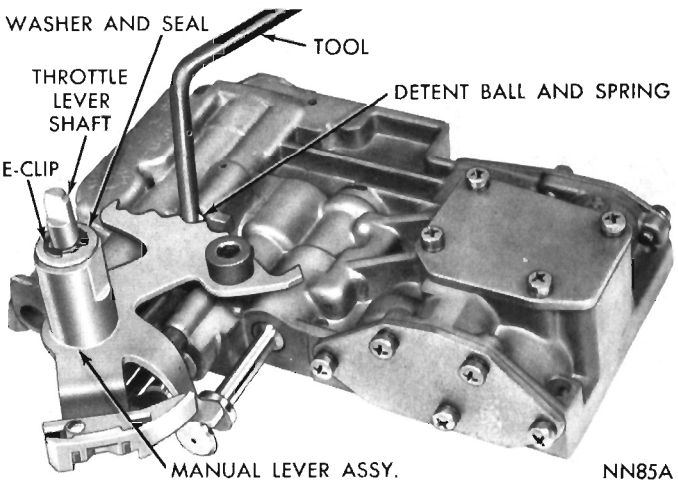

Fig. 56—Installing Detent Ball, Spring and Control Levers

Measure and if necessary, align spring retainer as shown in Fig. 22.

(16) Install oil filter and tighten the three retaining screws to 35 inch-pounds. **After valve body has been serviced and completely assembled, adjust throttle and line pressures (Fig. 23 and 24). However, if pressures were satisfactory prior to disassembly, use original settings.**

ACCUMULATOR PISTON AND SPRING

Inspection

Inspect seal rings for wear and make sure they turn freely in piston grooves. It is not necessary to remove rings unless conditions warrant. Inspect piston for nicks, burrs, scores and wear. Inspect piston bore in the case for scores or other damage. Inspect piston spring for distortion. Replace parts as required.

EXTENSION HOUSING BUSHING AND OIL SEAL

Replacement

(1) Remove the extension housing yoke seal (Fig. 29) with Tool C-3994 or C-3985.

(2) **A-904:** Press or drive out bushing with Tool C-3996 (Fig. 57).

A-727: Remove bushing in the same manner with Tool C-3974.

(3) **A-904:** Slide a new bushing on installing end of Tool C-3996. Align oil hole in bushing with oil slot in the housing, then press or drive bushing into place (Fig. 57).

A-727: Using Tool C-3974, install a new bushing in same manner.

(4) **A904:** Drive a new oil seal into housing with Tool C-3995 (Fig. 30).

A-727: Using Tool C-3972, install a new oil seal in same manner.

PARKING LOCK SPRAG

Disassembly

(1) Slide shaft out of extension housing to remove parking sprag and spring (Fig. 35). Remove snap ring and slide reaction plug and pin assembly out of the housing.

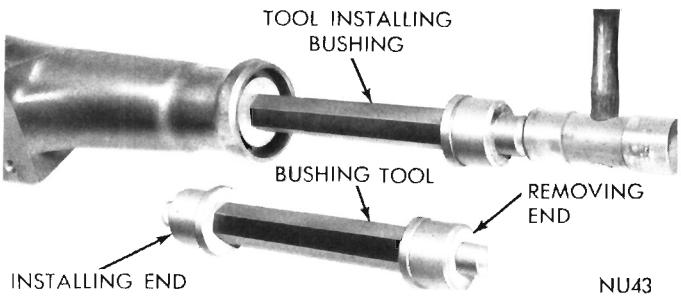

Fig. 57—Replacing Extension Housing Bushing

Inspection

Inspect sprag shaft for scores and free movement in the housing and sprag. Inspect sprag and control rod springs for distortion and tension. Inspect square lug on sprag for broken edges, also lugs on parking gear for damage. Inspect knob on end of control rod for nicks, burrs and free turning.

To replace parking gear, refer to "Governor and Support—Disassembly and Assembly."

Assembly

(1) Install reaction plug and pin assembly in the housing and secure with snap ring (Fig. 35).

(2) Position sprag and spring in housing and insert the shaft. Make sure square lug on sprag is toward parking gear, and spring is positioned so it moves sprag away from the gear.

GOVERNOR AND SUPPORT

Disassembly

(1) Remove large snap ring from weight end of governor body, lift out weight assembly.

(2) Remove snap ring from inside governor weight, remove inner weight and spring from outer weight.

(3) If lugs on support gear are damaged, remove four bolts and separate support from governor body.

Cleaning and Inspection

Figure 34 shows a disassembled view of the governor assembly.

Inspect all parts for burrs and wear. Inspect inner weight for free movement in outer weight, and outer weight for free movement in governor body. Inspect valve for free movement in governor body. The weights and valve should fall freely in the bores when clean and dry. Rough surfaces may be removed with crocus cloth.

Inspect governor weight spring for distortion. Inspect lugs on support gear for broken edges or other damage. Thoroughly clean all governor parts in clean solvent and test for free movement before assembly.

Assembly

(1) If support was separated from governor body, assemble and tighten bolts finger tight.

(2) Assemble governor weights and spring, and secure with snap ring inside of large governor weight. Place weight assembly in governor body and install snap ring.

OIL PUMP AND REACTION SHAFT SUPPORT—A-904

Disassembly

Figure 58 shows the oil pump and reaction shaft support disassembled.

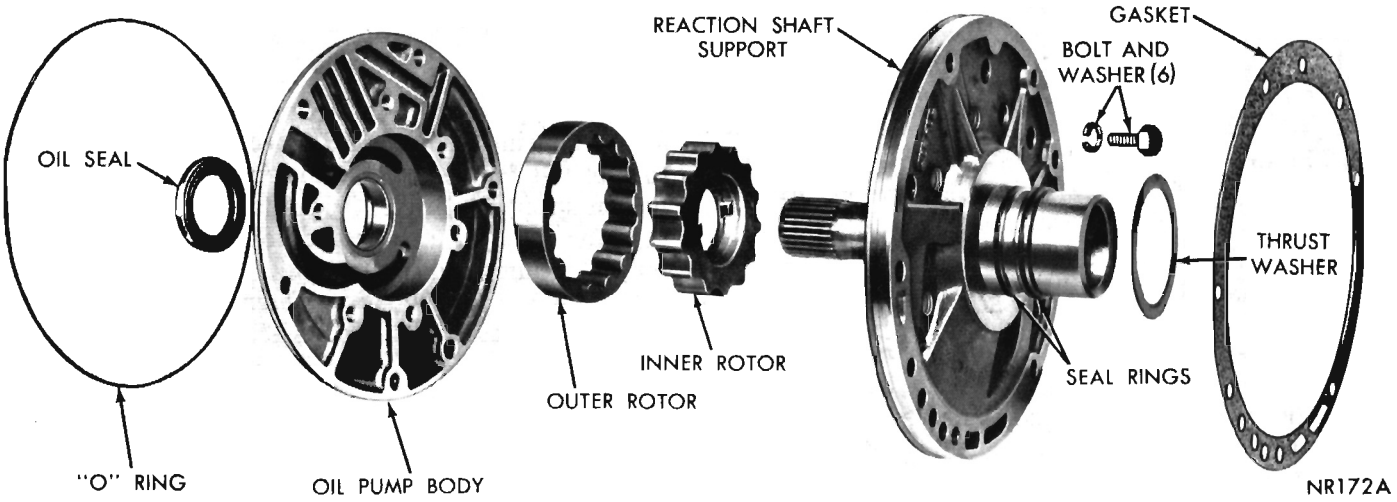

Fig. 58—Oil Pump and Reaction Shaft Support Disassembled (A-904)

(1) Remove bolts from rear side of reaction shaft support and lift support off the pump.

(2) Remove rubber seal ring from pump body flange.

(3) Drive out oil seal with a blunt punch.

Inspection

Inspect interlocking seal rings (Fig. 58) on reaction shaft support for wear or broken locks, make sure they turn freely in the grooves. Do not remove rings unless conditions warrant. Inspect front clutch piston retainer to reaction shaft support thrust washer for wear. Washer thickness should be .043 to .045 inch, replace if necessary. Inspect machined surfaces on pump body and reaction shaft support for nicks and burrs. Inspect pump body and reaction shaft support bushings for wear or scores. Inspect pump rotors for scoring or pitting. With rotors cleaned and installed in pump body, place a straight edge across face of rotors and pump body. Use a feeler gauge to measure clearance between straight edge and face of rotors. Clearance limits are from .0015 to .003 inch. Also, measure rotor tip clearance between inner and outer rotor teeth. Clearance limits are from .005 to .010 inch. Clearance between outer rotor and its bore in oil pump body should be .004 to .008 inch.

Pump Bushing Replacement—A-904

(1) Place pump housing (seal face down) on a smooth firm surface.

(2) Place removing head, Tool SP-3551 in bushing and install handle, Tool SP-3549 in the removing head (Fig. 59).

(3) Drive bushing straight down and out of pump housing bore. Be careful not to cock tool in the bore.

(4) Position new bushing on installing head, Tool SP-5117.

(5) With pump housing on a smooth clean surface, start bushing and installing head in the bushing bore. Install handle, Tool SP-3549 in the installing head (Fig. 59).

(6) Drive bushing into housing until tool bottoms in the pump cavity. Be careful not to cock tool during installation.

(7) Stake bushing in place by using a blunt punch or similar tool (Fig. 60). A gentle tap at each stake slot location will suffice.

(8) Using a narrow-bladed knife or similar tool, remove high points or burrs around staked area (Fig. 60). Do not use a file or similar tool that will remove more metal than is necessary.

Reaction Shaft Bushing Replacement—A-904

In case of a reaction shaft bushing failure, always inspect the support for wear from the input shaft seal

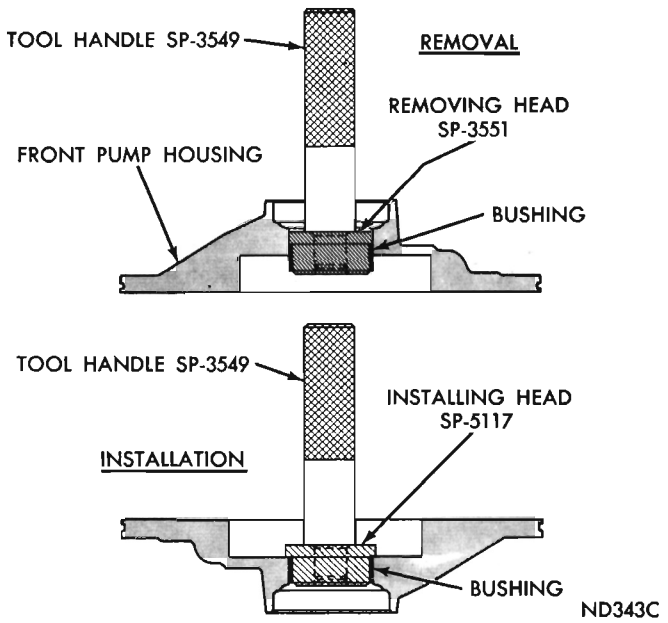

Fig. 59—Replacing Pump Bushing (A-904)

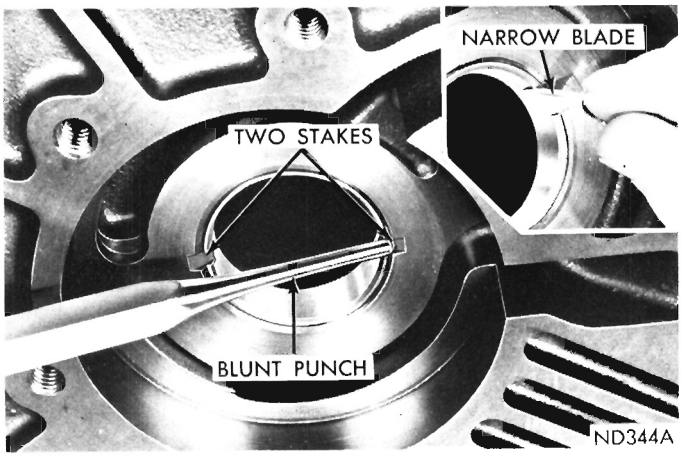

Fig. 60—Staking Pump Bushing (A-904)

ring lands. If worn or grooved, replace support assembly.

(1) Assemble remover Tool SP-5324, cup Tool SP-3633, and hex nut Tool SP-1191 (Fig. 61).

CAUTION: Do not clamp any part of reaction shaft or support in a vise.

(2) With cup held firmly against reaction shaft, thread remover into bushing as far as possible by hand.

(3) Using a wrench, screw remover into bushing 3 to 4 additional turns to firmly engage threads in the bushing.

(4) Turn hex nut down against cup to pull bushing from reaction shaft. Thoroughly clean reaction shaft to remove chips made by remover threads.

(5) Lightly grip bushing in a vise or with pliers and back tool out of the bushing. Be careful not to damage threads on bushing remover.

(6) Slide a new bushing on installing head Tool SP-5325, and start them in the bore of reaction shaft (Fig. 61).

(7) Support reaction shaft upright on a clean smooth surface and install handle Tool SP-3549 in installing head. Drive bushing into the shaft until tool bottoms.

(8) Thoroughly clean reaction shaft support assembly before installation.

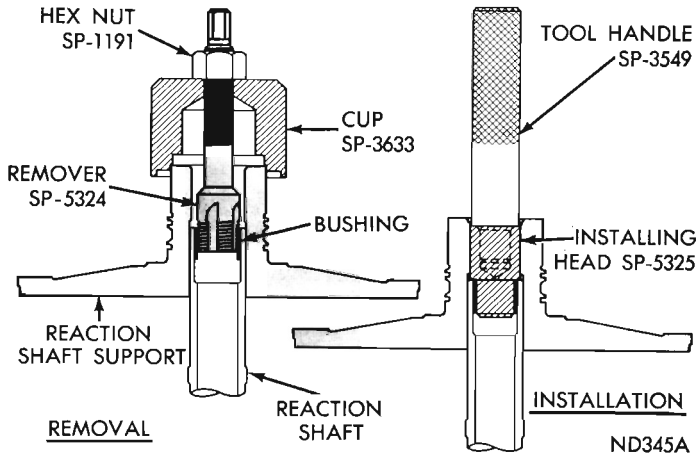

Fig. 61—Replacing Reaction Shaft Bushing (A-904)

Assembly

(1) Place reaction shaft support in assembling Tool C-3759, with hub of support and tool resting on a smooth **flat** surface bench (Fig. 62). Screw two pilot studs, Tool C-3283 into threaded holes of reaction shaft support flange.

(2) Assemble and place rotors in center of the support (Fig. 62).

(3) Lower pump body over the pilot studs, insert Tool C-3756 through pump body and engage pump inner rotor. Rotate the rotors with tool to enter rotors in pump body, then with pump body firm against reaction shaft support, tighten clamping tool securely.

(4) Invert pump and reaction shaft support assembly with clamping tool intact. Install support to pump body bolts and tighten to 125 inch-pounds. Remove clamping tool, pilot studs and rotor alignment tool.

(5) Place a new oil seal in opening of pump housing (lip of seal facing inward). Using Tool C-3757, drive seal into housing until tool bottoms.

OIL PUMP AND REACTION SHAFT SUPPORT—A-727

Disassembly

Figure 63 shows the oil pump and reaction shaft support disassembled.

(1) Remove bolts from rear side of reaction shaft support, and remove vent baffle and lift support off the pump.

(2) Remove rubber seal ring from pump body flange.

(3) Drive out oil seal with a blunt punch.

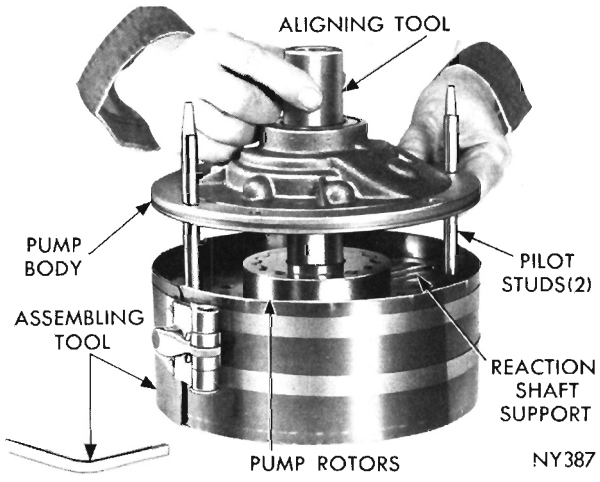

Fig. 62—Assembling Pump and Reaction Shaft Support (A-904)

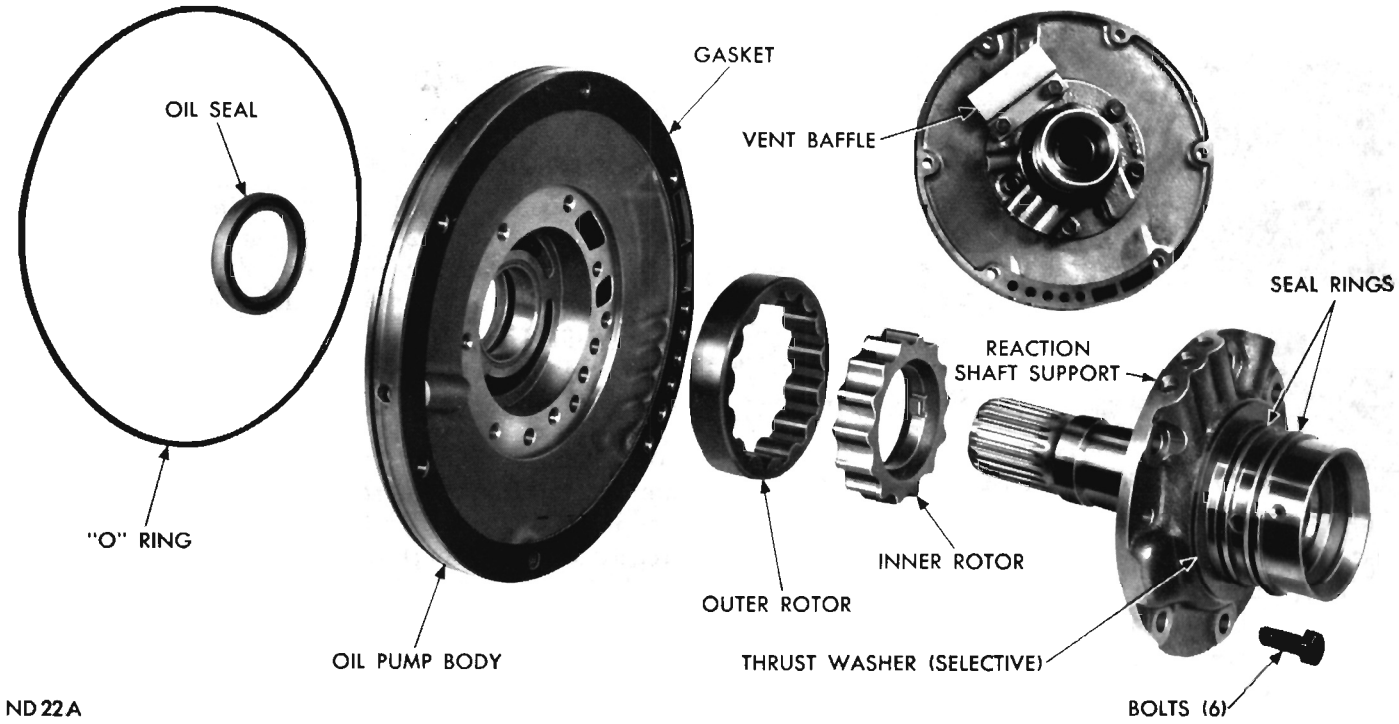

Fig. 63—Oil Pump and Reaction Shaft Support (A-727)

Inspection

Inspect interlocking seal rings (Fig. 63) on reaction shaft support for wear or broken locks, make sure they turn freely in the grooves. Do not remove rings unless conditions warrant. Inspect machined surfaces on pump body and reaction shaft support for nicks and burrs. Inspect pump body and reaction shaft support bushings for wear or scores. Inspect pump rotors for scoring or pitting. With rotors cleaned and installed in pump body, place a straight edge across face of rotors and pump body. Use a feeler gauge to measure clearance between straight edge and face of rotors. Clearance limits are from .0015 to .003 inch. Also, measure rotor tip clearance between inner and outer teeth. Clearance limits are from .005 to .010 inch. Clearance between outer rotor and its bore in oil pump body should be .004 to .008 inch.

Pump Bushing Replacement—A-727

(1) Place pump housing on a clean smooth surface with rotor cavity down.

(2) Place removing head Tool SP-3550 in the bushing, and install handle Tool SP-3549 in the removing head (Fig. 64).

(3) Drive bushing straight down and out of the bore. Be careful not to cock tool in the bore.

(4) Position a new bushing on installing head Tool SP-5118.

(5) With pump housing on a smooth clean surface (hub end down), start bushing and installing head in the bushing bore. Install handle Tool SP-3549 in installing head (Fig. 64).

(6) Drive bushing into housing until tool bottoms in the pump cavity. Be careful not to cock tool during installation.

(7) Stake the bushing in place by using a blunt punch or similar tool (Fig. 65). A gentle tap at each stake slot location will suffice.

(8) Using a narrow-bladed knife or similar tool, remove high points or burrs around staked area (Fig.

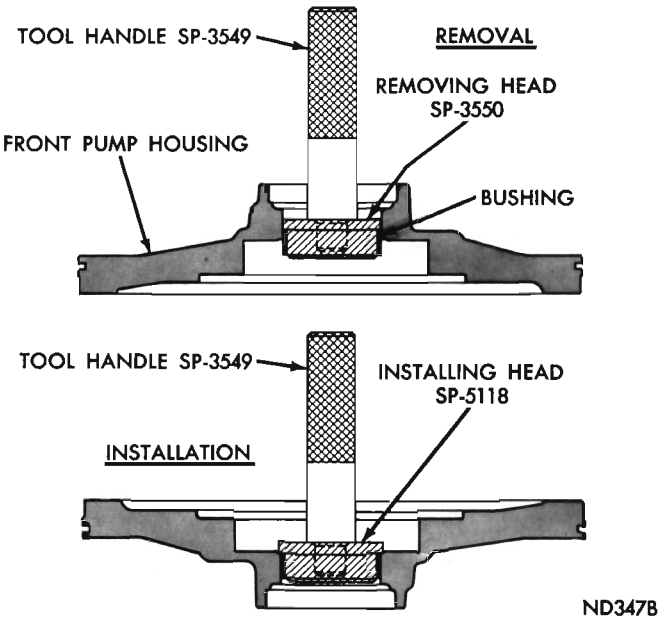

Fig. 64—Replacing Pump Bushing (A-727)

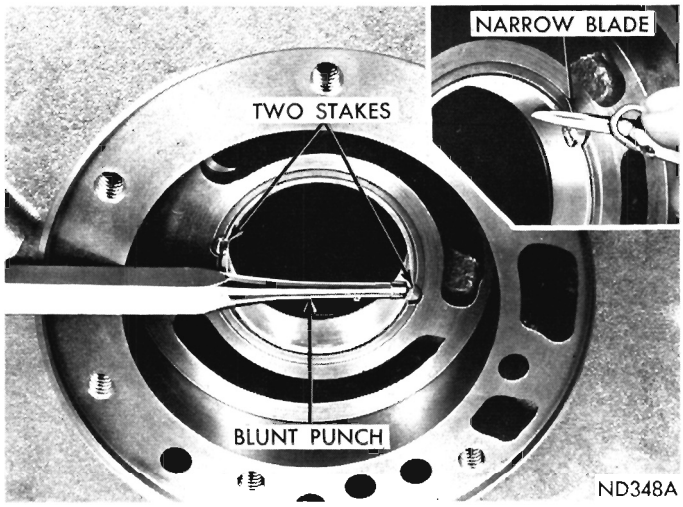

Fig. 65—Staking Pump Bushing (A-727)

65). Do not use a file or similar tool that will remove more metal than is necessary.

(9) Thoroughly clean pump housing before installation.

Reaction Shaft Bushing Replacement—A-727

(1) Assemble remover Tool SP-5301, cup Tool SP-3633, and hex nut Tool SP-1191 (Fig. 66).

CAUTION: Do not clamp any part of reaction shaft or support in a vise.

(2) With cup held firmly against reaction shaft, thread remover into bushing as far as possible by hand.

(3) Use a wrench to screw remover into bushing 3 to 4 additional turns to firmly engage threads in the bushing.

(4) Turn hex nut down against the cup to pull bushing from reaction shaft. Thoroughly clean reaction shaft to remove chips made by removing threads.

(5) Lightly grip bushing in a vise or with pliers and back tool out of the bushing. Be careful not to damage threads on bushing remover.

(6) Slide a new bushing (chamfered end first) on installing head Tool SP-5302, and start them in the bore of reaction shaft (Fig. 66).

(7) Support reaction shaft upright on a clean smooth surface and install handle Tool SP-3549 in installing head. Drive bushing into shaft until tool bottoms.

(8) Thoroughly clean reaction shaft support assembly before installation.

Assembly

(1) Assemble pump rotors in the pump housing (Fig. 63).

(2) Install reaction shaft support and position vent baffle over vent opening. Install retaining bolts and tighten to 150 inch-pounds.

(3) Place a new oil seal in opening of pump housing (lip of seal facing inward) using Tool C-3860 drive seal into housing until tool bottoms.

FRONT CLUTCH—A-904

Disassembly

Figure 67 shows a disassembled view of the front clutch assembly.

(1) Remove large selective snap ring that secures pressure plate in the clutch piston retainer. Lift pressure plate and clutch plates out of the retainer.

(2) Install compressor, Tool C-3575 over piston spring retainer (Fig. 68). Compress spring and remove snap ring, then slowly release tool until spring retainer is free of the hub. Remove tool, retainer and spring.

(3) Invert clutch retainer assembly and bump it on a wood block to remove the piston. Remove seal rings from the piston and clutch retainer hub.

Inspection

Inspect facing material on all driving discs. Replace discs that are charred, glazed or heavily pitted. Discs should also be replaced if they show evidence of material flaking off or if facing material can be scraped off easily. Inspect driving disc splines for wear or other damage. Inspect steel plate and pressure plate surfaces for burning, scoring or damaged driving lugs. Replace if necessary.

Inspect steel plate lug grooves in clutch retainer for smooth surfaces, plates must travel freely in grooves. Inspect band contacting surface on clutch retainer for scores, **the contact surface should be protected from damage during disassembly and handling.** Note ball check in clutch retainer, make sure ball moves freely. Inspect piston seal ring surfaces in clutch retainer for nicks or deep scratches, light scratches will not interfere with sealing of neoprene rings. Inspect clutch

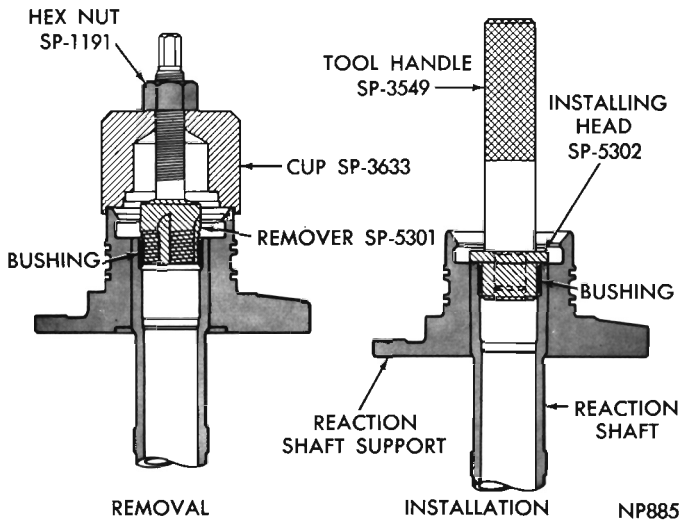

Fig. 66—Replacing Reaction Shaft Bushing (A-727)

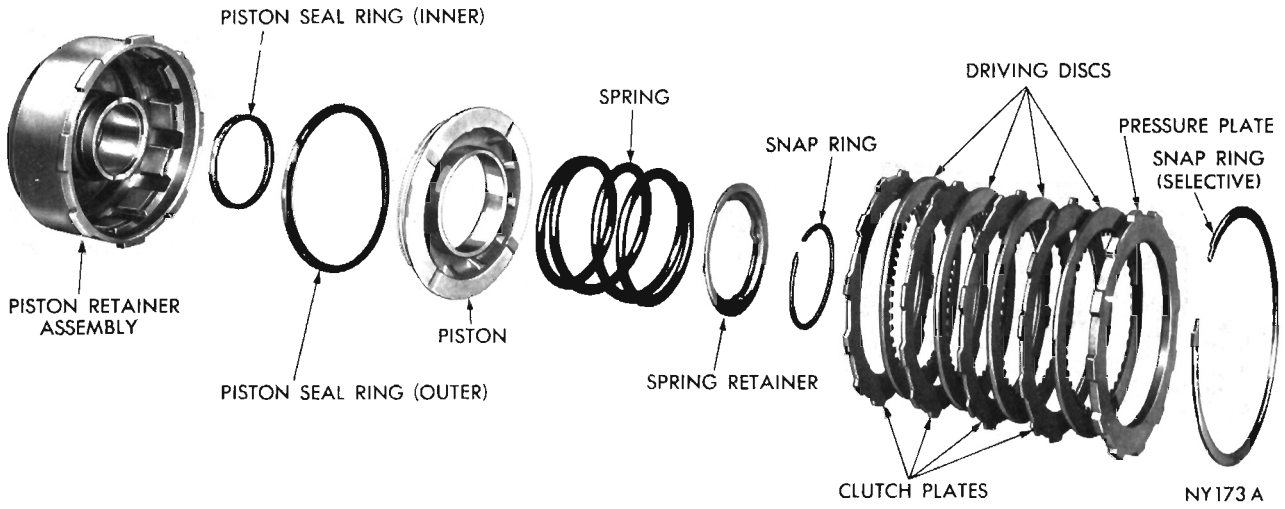

Fig. 67—Front Clutch Disassembled (A-904)

retainer inner bore surface for wear from reaction shaft support seal rings. Inspect clutch retainer bushing for wear or scores.

Inspect inside bore of piston for score marks, if light, remove with crocus cloth. Inspect seal ring grooves for nicks and burrs. Inspect neoprene seal rings for deterioration, wear, and hardness. Inspect piston spring, retainer and snap ring for distortion.

Front Clutch Retainer Bushing Replacement A-904

(1) Lay clutch retainer (open end down) on a clean smooth surface and place removing head Tool SP-3627 in the bushing (Fig. 69). Install handle Tool SP-3549 in removing head.

(2) Drive bushing straight down and out of clutch retainer bore. Be careful not to cock tool in the bore.

(3) Lay clutch retainer (open end up) on a clean smooth surface. Slide a new bushing on installing head Tool SP-3626, and start them in clutch retainer bore (Fig. 69).

(4) Install handle Tool SP-3549 in installing head. Drive bushing into clutch retainer until tool bottoms.

(5) Thoroughly clean clutch retainer before assembly and installation.

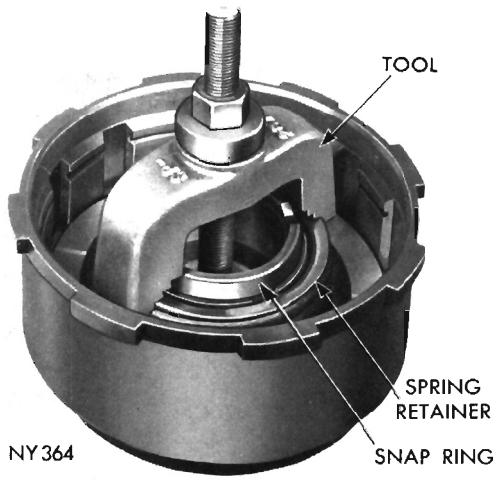

Fig. 68—Removing or Installing Front Clutch Retainer Snap Ring (A-904)

Assembly

(1) Lubricate and install inner seal ring on hub of clutch retainer. Make sure lip of seal faces down and is properly seated in the groove (Fig. 67).

(2) Lubricate and install outer seal ring on clutch piston, with lip of seal toward bottom of clutch retainer. Place piston assembly in retainer and, with a twisting motion, seat piston in bottom of retainer.

(3) Place spring on piston hub and position spring retainer and snap ring on the spring. Compress spring with Tool C-3575 (Fig. 68), and seat snap ring in hub groove. Remove compressor tool.

(4) Lubricate all clutch plates, install one steel plate followed by a lined plate until all plates are installed. Install pressure plate and selective snap

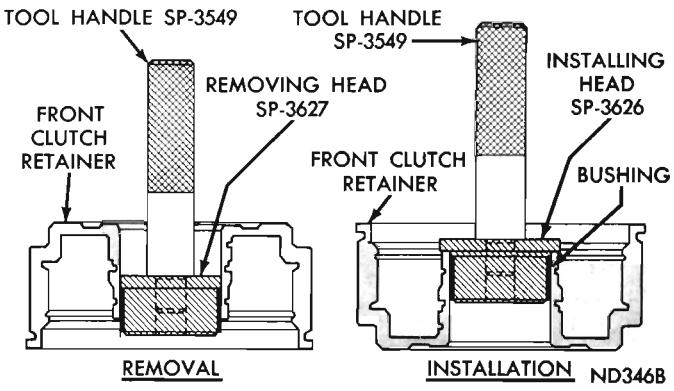

Fig. 69—Replacing Front Clutch Retainer Bushing (A-904)

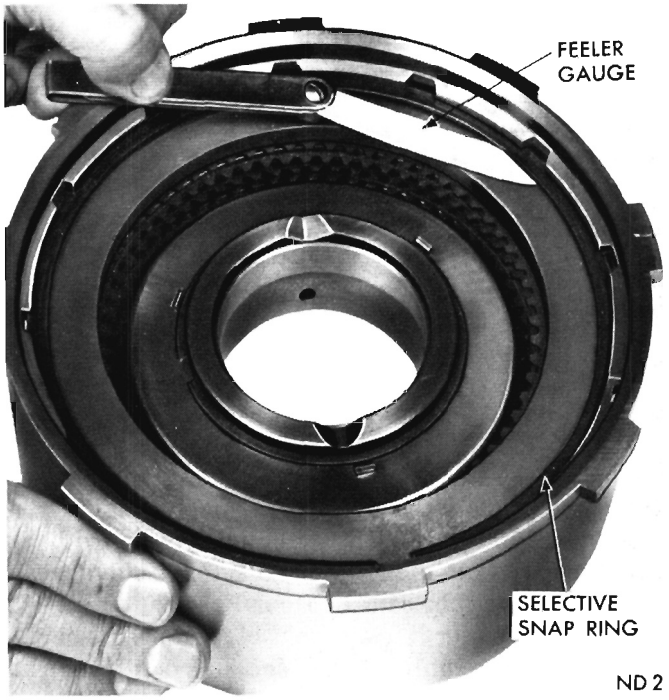

Fig. 70—Measuring Front Clutch Plate Clearance

ring. Make sure snap ring is properly seated.

The A-904 transmission uses three plates and discs in front clutch for both six cylinder engines. Four plates and discs are used in A-904 transmissions for eight cylinder engines.

(5) With front clutch completely assembled, insert a feeler gauge between pressure plate and snap ring (Fig. 70). The clearance should be .056 to .104 inch for the four plate clutch, and .042 to .087 inch for the three plate clutch. If not, install a snap ring of proper thickness to obtain specified clearance. **Snap rings are the same as those used in rear clutch and are available in .060-.062; .068-.070 and .076-.078 inch thickness.**

FRONT CLUTCH—A-727

Disassembly

Figure 71 shows a disassembled view of the front clutch assembly.

(1) Remove large selective snap ring that secures pressure plate in clutch piston retainer. Lift pressure plate and clutch plates out of the retainer.

(2) Install compressor, Tool C-3863 over piston spring retainer, (Fig. 72). Compress springs and remove snap ring, then slowly release tool until spring retainer is free of hub. Remove tool, retainer and springs.

(3) Invert clutch retainer assembly and bump it on a wood block to remove piston. Remove seals from piston and clutch retainer hub.

Inspection

Inspect facing material on all driving discs. Replace discs that are charred, glazed or heavily pitted. Disc should also be replaced if they show evidence of material flaking off or if facing material can be scraped off easily. Inspect driving disc splines for wear or other damage. Inspect steel plate and pressure plate surfaces for burning, scoring or damaged driving lugs. Replace if necessary.

Inspect steel plate lug grooves in clutch retainer for smooth surfaces, plates must travel freely in the

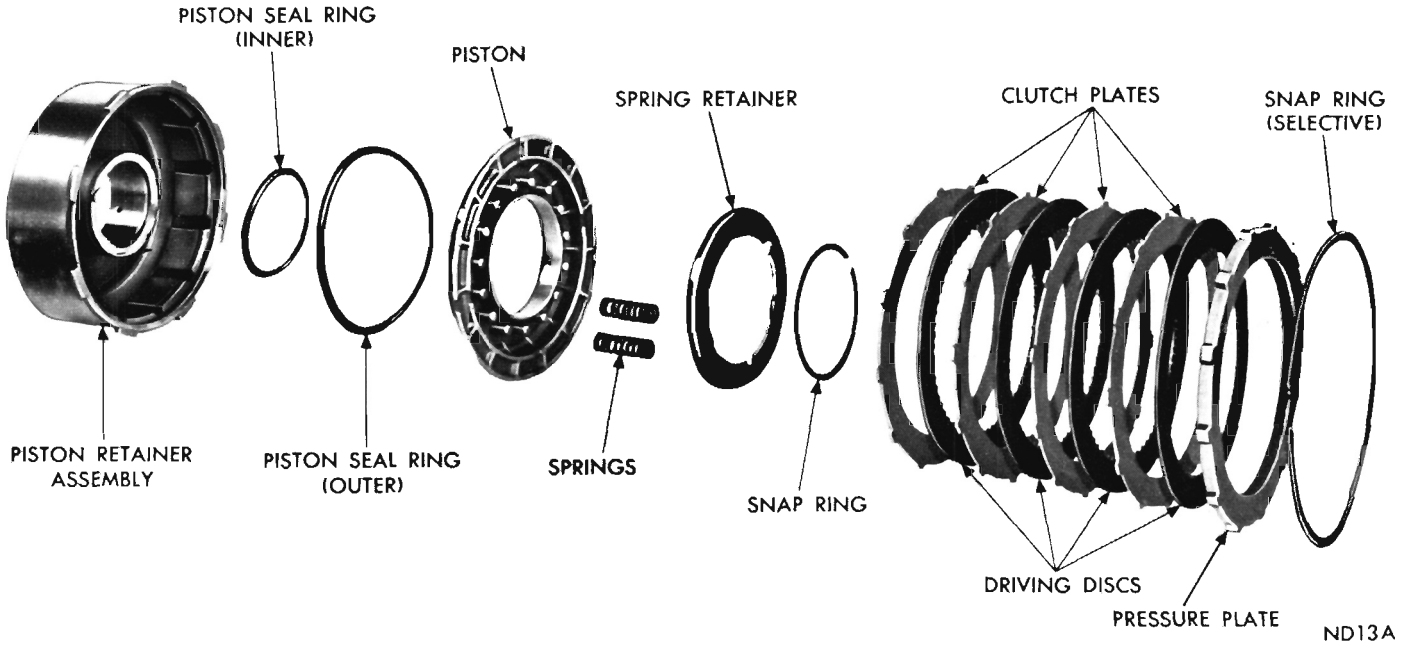

Fig. 71—Front Clutch Disassembled (A-727)

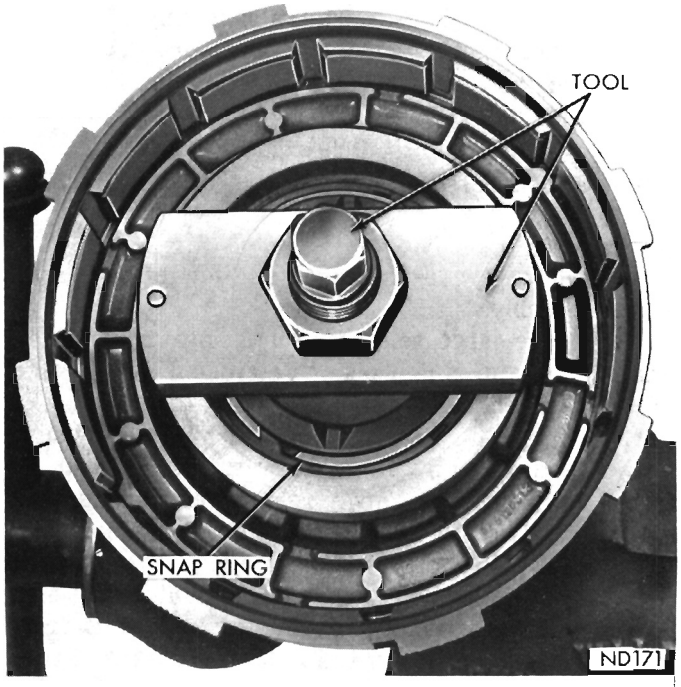

Fig. 72—Removing or Installing Front Clutch (Retainer Snap Ring (A-727)

grooves. Inspect band contacting surface on clutch retainer for scores. Note ball check in clutch retainer, make sure ball moves freely. Inspect seal surfaces in clutch retainer for nicks or deep scratches, light scratches will not interfere with sealing of neoprene rings. Inspect clutch retainer bushing for wear or scores.

Inspect inside bore of piston for score marks, if light, remove with crocus cloth. Inspect seal grooves for nicks and burrs. Inspect neoprene seals for deterioration, wear, and hardness. Inspect piston springs, retainer and snap ring for distortion.

Front Clutch Retainer Bushing Replacement A-727

(1) Lay clutch retainer (open end down) on a clean smooth surface and place removing head Tool SP-3629 in the bushing. Install handle Tool SP-3549 in removing head (Fig. 73).

(2) Drive bushing straight down and out of clutch retainer bore. Be careful not to cock tool in the bore.

(3) Lay clutch retainer (open end up) on a clean smooth surface. Slide a new bushing on installing head Tool SP-3628, and start them in clutch retainer bore.

(4) Install handle Tool SP-3549 in the installer (Fig. 73). Drive bushing into clutch retainer until tool bottoms.

(5) Thoroughly clean clutch retainer before assembly and installation.

Assembly

(1) Lubricate and install inner seal on hub of clutch retainer. Make sure lip of seal faces down and is properly seated in the groove.

(2) Install outer seal on the clutch piston, with lip of seal toward bottom of clutch retainer. Apply a coating of wax type lubricant or Door Ease to outer edge of seals for easier installation of piston assembly. Place piston assembly in retainer and carefully seat piston in bottom of retainer.

(3) Refer to "Front Clutch Chart" and install springs on piston exactly as shown in Figure 74, 75, 76 or 77. Position spring retainer and snap ring over the springs. Compress springs with Tool C-3863 (Fig. 72), and seat snap ring in hub groove. Remove compressor tool.

(4) Lubricate all clutch plates, install one steel plate followed by a lined plate (disc) until the number given in the chart is installed. Install pressure plate and snap ring. Make sure snap ring is properly seated.

(5) With front clutch completely assembled, push downward on pressure plate and insert a feeler gauge

FRONT CLUTCH CHART

(A-727)

Engine Type	Clutch Disc	Plate Clearance	Piston Springs
225 Cu. In.	3	.036 to .086"	12
318 Cu. In.	3	.036 to .086"	12
340 Cu. In.	4	.024 to .125"	6
383 Cu. In.	4	.024 to .125"	8
(High Perf.)	4	.024 to .125"	6
440 Cu. In.	4	.024 to .125"	6
(High Perf.)	4	.066 to .123"	10
426 Cu. In.	5	.022 to .079"	12

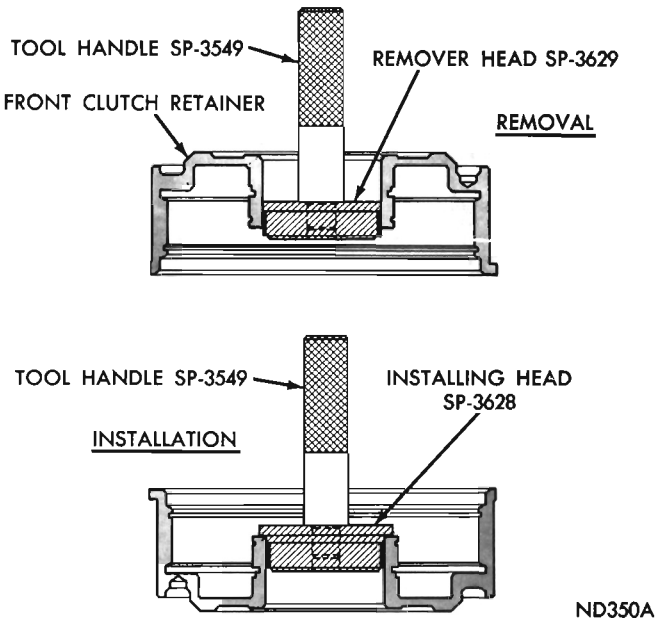

Fig. 73—Replacing Front Clutch Retainer Bushing (A-727)



Fig. 74—Front Clutch Piston Return Spring Location (12 Springs)

between pressure plate and snap ring (Fig. 70). The clearance should be within limits given in the chart. If not, install a snap ring of proper thickness to obtain specified clearance. **Snap rings are the same as those used in rear clutch and are available in .060-.062, .074-.076 and .088-.090 inch thickness.**

REAR CLUTCH—A-904

Disassembly

Figure 78 shows a disassembled view of the rear clutch assembly.

(1) Remove large selective snap ring that secures pressure plate in clutch piston retainer. Lift pressure plate, clutch plates, and inner pressure plate out of the retainer.

(2) Carefully pry one end of wave spring out of its groove in clutch retainer, then remove wave spring, spacer ring and clutch piston spring.

(3) Invert clutch piston retainer assembly and bump it on a wood block to remove piston. Remove seals from piston.

(4) If necessary, remove snap ring and press input shaft from piston retainer.

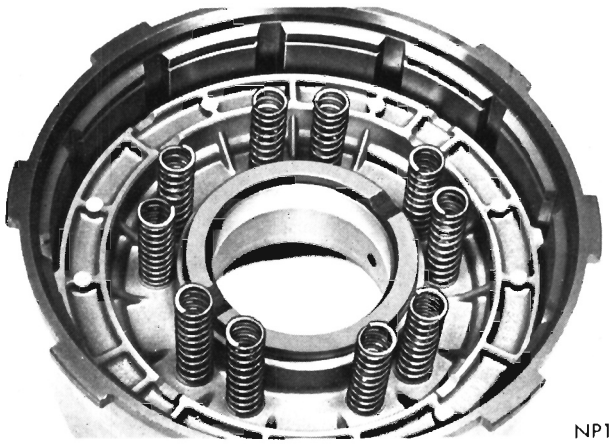

Fig. 75—Front Clutch Piston Return Spring Location (10 Springs)

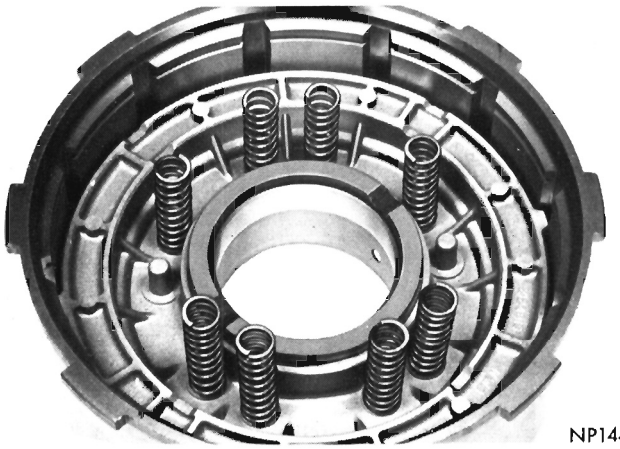

Fig. 76—Front Clutch Piston Return Spring Location (8 Springs)

Inspection

Inspect facing material on all driving discs. Replace discs that are charred, glazed or heavily pitted. Discs should also be replaced if they show evidence of material flaking off or if facing material can be scraped off easily. Inspect driving disc splines for wear or other damage. Inspect steel plate and pressure plate surface for burning, scoring or damaged driving lugs. Replace if necessary. Inspect plates and discs for flatness, they must not be warped or cone-shaped.

Inspect steel plate lug grooves in clutch retainer for smooth surfaces, plates must travel freely in the grooves. Note ball check in clutch retainer, make sure ball moves freely. Inspect seal ring surfaces in clutch retainer for nicks or deep scratches, light scratches will not interfere with sealing of the neoprene rings. Inspect neoprene seal rings for deterioration, wear and hardness. Inspect piston spring, wave spring, and spacer for distortion or breakage.

Inspect interlocking seal rings (Fig. 78) on input shaft and piston retainer for wear or broken locks, make sure they turn freely in the grooves. Do not remove rings unless conditions warrant. Inspect rear

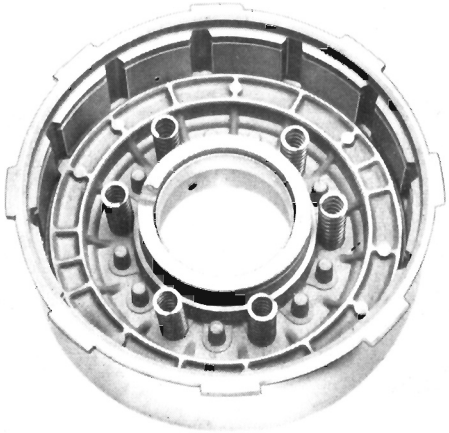

Fig. 77—Front Clutch Piston Return Spring Location (6 Springs)

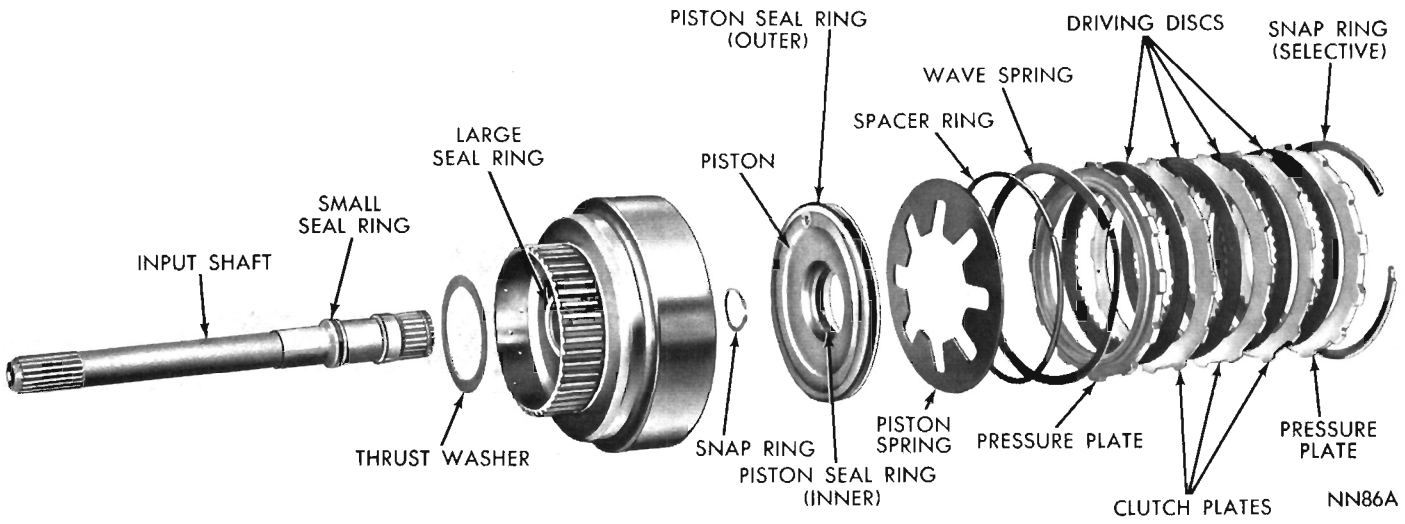

Fig. 78—Rear Clutch Disassembled (A-904)

clutch to front clutch thrust washer for wear. Washer thickness should be .043 to .045 inch, replace if necessary.

Assembly

(1) If removed, press input shaft into piston retainer and install snap ring.

(2) Lubricate and install inner and outer seal rings on clutch piston. Make sure lip of seals face toward head of clutch retainer, and are properly seated in piston grooves (Fig. 78).

(3) Place piston assembly in retainer and, with a twisting motion, seat piston in bottom of retainer.

(4) Place clutch piston spring and spacer ring on top of piston in clutch retainer, make sure spring and spacer ring are positioned in the retainer recess. Start one end of wave spring in retainer groove (Fig. 79), then progressively push or tap spring into place making sure it is fully seated in the groove.

(5) Install inner pressure plate in clutch retainer with raised portion of plate resting on the spring.

(6) Lubricate all clutch plates, install one lined plate followed by a steel plate until all plates are installed. Install outer pressure plate and selective snap ring. **The A-904 transmission uses two plates and three discs in rear clutch for both six cylinder engines. Three plates and four discs are used in the A-904 transmissions for eight cylinder engines.**

(7) Measure rear clutch plate clearance by having an assistant press down firmly on outer pressure plate, then insert a feeler gauge between the plate and snap ring (Fig. 80). The clearance should be between .032-.055 inch. If not, install a snap ring of proper thickness to obtain specified clearance. Low limit clearance is desirable. **Rear clutch plate clear-**

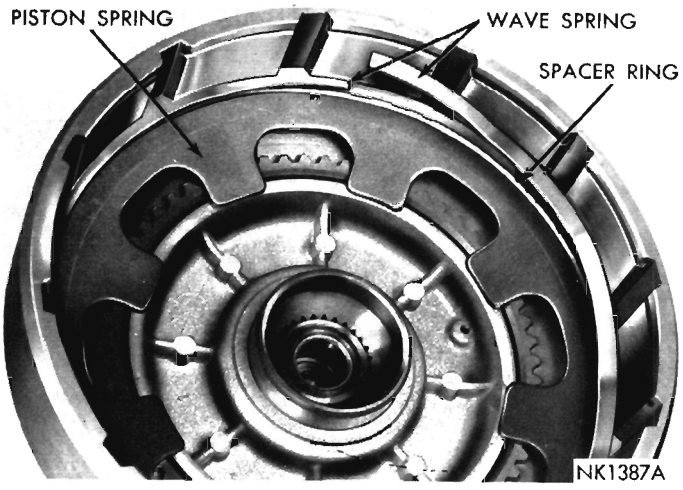

Fig. 79—Installing Rear Clutch Spring, Spacer Ring and Wave Spring

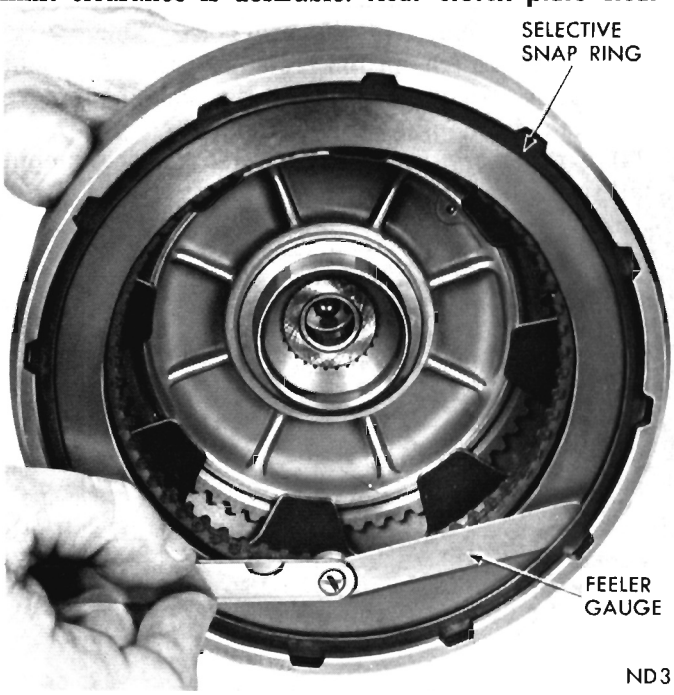

Fig. 80—Measuring Rear Clutch Plate Clearance

ance is very important in obtaining proper clutch operation. Clearance can be adjusted by the use of various thickness outer snap rings. Snap rings are available in .060-.062, .068-.070 and .076-.078 inch thickness.

REAR CLUTCH—A-727

Disassembly

Figure 81 shows a disassembled view of the rear clutch assembly.

(1) Remove large selective snap ring that secures pressure plate in clutch retainer. Lift pressure plate, clutch plates, and inner pressure plate out of the retainer.

(2) Carefully pry one end of wave spring out of its groove in clutch retainer, then remove wave spring, spacer ring and clutch piston spring.

(3) Invert clutch piston retainer assembly and bump it on a wood block to remove piston. Remove seals from the piston.

(4) If necessary, remove snap ring and press input shaft from clutch piston retainer.

Inspection

Inspect facing material on all driving discs. Replace discs that are charred, glazed or heavily pitted. Discs should also be replaced if they show evidence of material flaking off or if facing material can be scraped off easily. Inspect driving disc splines for wear or other damage. Inspect steel plate and pressure plate surfaces for burning, scoring or damaged driving lugs. Replace if necessary.

Inspect steel plate lug grooves in clutch retainer for smooth surfaces, plates must travel freely in the grooves. Note ball check in the piston, make sure ball moves freely. Inspect seal surfaces in clutch retainer for nicks or deep scratches, light scratches will not interfere with sealing of neoprene seals. Inspect neoprene seals for deterioration, wear, and hardness. Inspect piston spring, wave spring, and spacer for distortion or breakage.

Inspect interlocking seal rings (Fig. 81) on input shaft for wear or broken locks, make sure they turn freely in the grooves. Do not remove rings unless conditions warrant. Inspect bushing in input shaft for wear or scores. Inspect rear clutch to front clutch thrust washer for wear. Washer thickness should be .061 to .063 inch, replace if necessary.

Input Shaft Bushing Replacement (A-727 only)

(1) Clamp input shaft in a vise with soft jaws, being careful not to clamp on seal ring lands or bearing journals.

(2) Assemble remover Tool SP-3630, cup Tool SP-3633, and hex nut Tool SP-1191 (Fig. 82).

(3) With cup held firmly against clutch piston retainer, thread remover into bushing as far as possible by hand.

(4) Using a wrench, screw remover into bushing 3 to 4 additional turns to firmly engage threads in the bushing.

(5) Turn hex nut down against cup to pull bushing from input shaft.

(6) Thoroughly clean input shaft to remove chips made by remover threads. Make certain small lubrica-

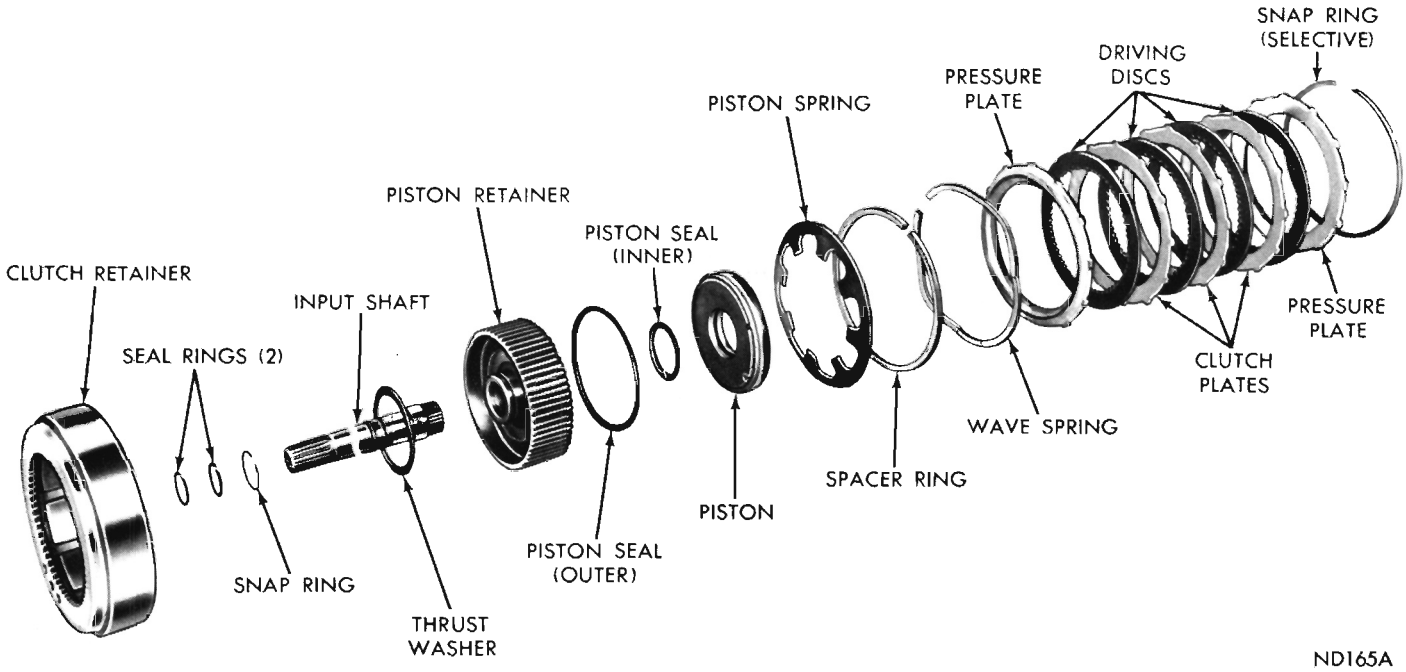

Fig. 81—Rear Clutch Disassembled (A-727)

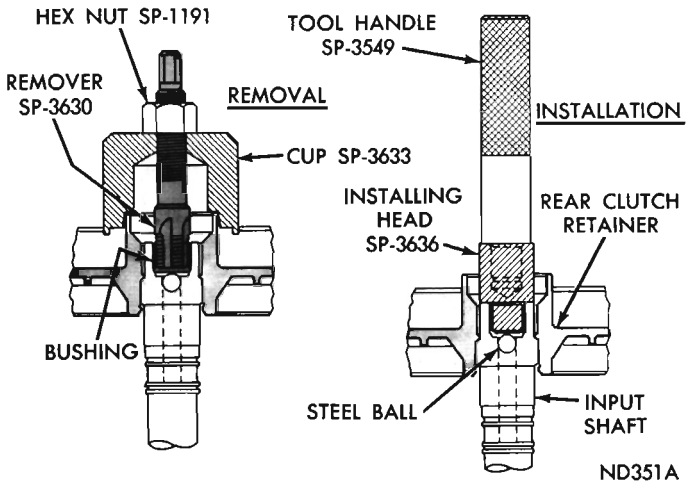

Fig. 82—Replacing Input Shaft Bushing (A-727)

tion hole next to ball in end of shaft is not plugged with chips. Be sure no chips are lodged next to the steel ball.

(7) Slide a new bushing on installing head Tool SP-3636, and start them in the bore of input shaft.

(8) Stand input shaft upright on a clean smooth surface and install handle Tool SP-3549 in the installing head (Fig. 82). Drive bushing into shaft until tool bottoms.

(9) Thoroughly clean input shaft and clutch piston retainer before assembly and installation.

Assembly

(1) If removed, press input shaft into clutch piston retainer and install snap ring.

(2) Lubricate and install inner and outer seal rings on clutch piston. Make sure lip of seals face toward head of clutch retainer, and are properly seated in piston grooves (Fig. 81).

(3) Place piston assembly in retainer and, with a twisting motion, seat piston in bottom of the retainer.

(4) Position clutch retainer over piston retainer splines and support the assembly so clutch retainer remains in place.

(5) Place clutch piston spring and spacer ring on top of piston in clutch retainer, make sure spring and spacer ring are positioned in the retainer recess. Start one end of wave spring in retainer groove (Fig. 79), then progressively push or tap spring into place making sure it is fully seated in the groove.

(6) Install inner pressure plate in clutch retainer with raised portion of plate resting on the spring.

(7) Lubricate all clutch plates, install one lined plate followed by a steel plate until all plates are installed. Install outer pressure plate and selective snap ring.

(8) Measure rear clutch plate clearance by having an assistant press downward firmly on outer pressure plate, then insert a feeler gauge between the plate and snap ring (Fig. 80). The clearance should be between .025 to .045 inch. If not, install a snap ring of proper thickness to obtain specified clearance. Low limit clearance is desirable. **Rear clutch plate clearance is very important in obtaining proper clutch operation. The clearance can be adjusted by the use of various thickness outer snap rings. Snap rings are available in .060-.062, .074-.076, .088-.090 and .106-.108 inch thickness.**

PLANETARY GEAR TRAIN—A-904

Measure end play of planetary gear assemblies, sun gear and driving shell before removing these parts from output shaft. With assembly in an upright position, push rear annulus gear support downward on the output shaft. Insert a feeler gauge between rear annulus gear support hub and shoulder on output shaft. (Fig. 83). The clearance should be .006 to .033 inch. If clearance exceeds specifications, replace thrust washers and/or necessary parts.

Disassembly

(1) Remove selective thrust washer from forward end of output shaft (Fig. 84).

(2) Remove selective snap ring from forward end of output shaft, then slide front planetary assembly off the shaft.

(3) Remove snap ring and thrust washer from forward hub of front planetary gear assembly, slide front annulus gear and support off planetary gear set (Fig. 84). Remove thrust washer from rear side of planetary gear set. If necessary, remove snap ring from front of annulus gear to separate support from annulus gear.

(4) Slide sun gear, driving shell and rear planetary assembly off the output shaft.

(5) Lift sun gear and driving shell off rear plan-

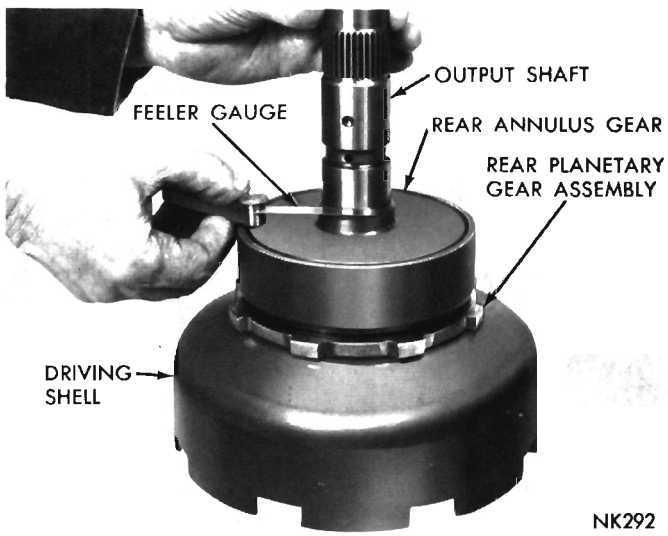

Fig. 83—Measuring End Play of Planetary Gear Assemblies

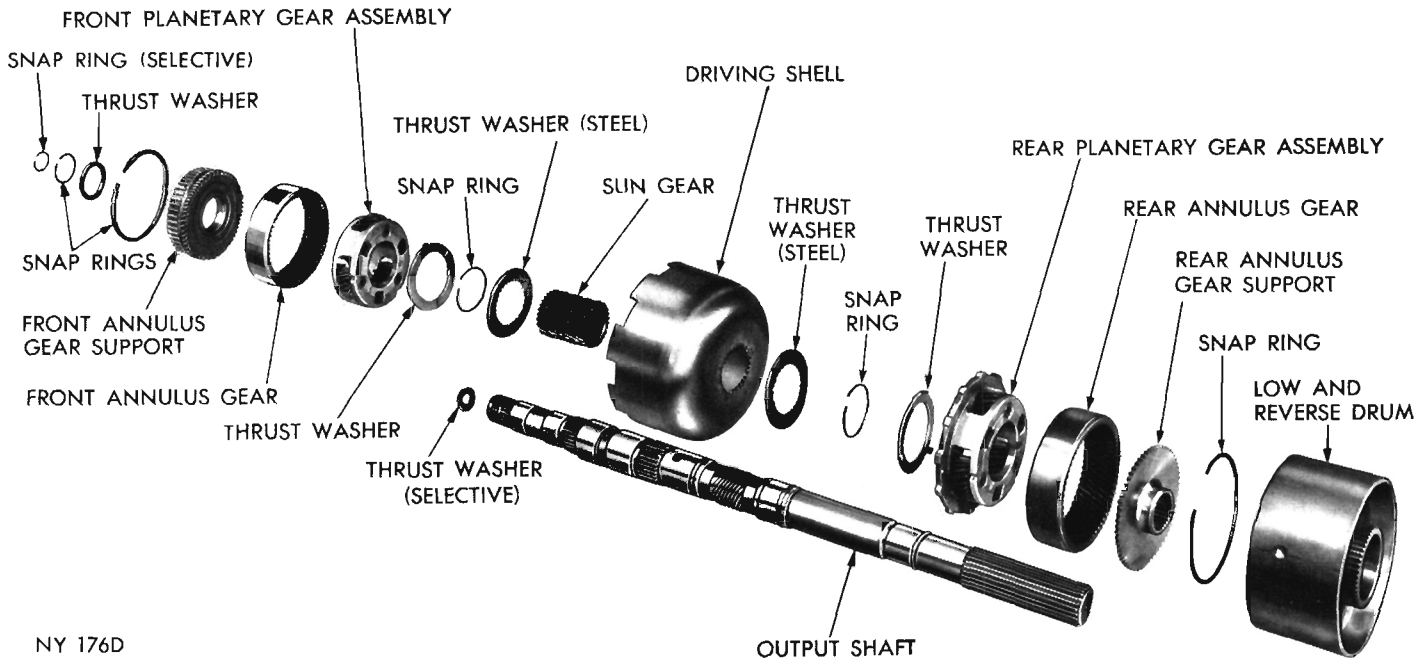

Fig. 84—Planetary Gear Train and Output Shaft Disassembled (A-904)

etary assembly. Remove snap ring and steel washer from sun gear (rear side of driving shell). Slide sun gear out of driving shell, and remove snap ring and steel washer from opposite end of sun gear if necessary.

(6) Remove thrust washer from forward side of rear planetary assembly and remove planetary gear set from rear annulus gear. If necessary, remove snap ring from rear of annulus gear to separate support from annulus gear.

Inspection

Inspect bearing surfaces on output shaft for nicks, burrs, scores or other damage. Light scratches, small nicks or burrs can be removed with crocus cloth or a fine stone. Inspect speedometer drive gear for any nicks or burrs, and remove with a sharp edged stone. Make sure all oil passages in shaft are open and clean.

Inspect bushings in sun gear for wear or scores, replace sun gear assembly if bushings are damaged. Inspect all thrust washers for wear and scores, replace if damaged or worn below specifications. Inspect thrust faces of planetary gear carriers for wear, scores or other damage, replace as required. Inspect planetary gear carrier for cracks and pinions for broken or worn gear teeth, and for broken pinion shaft lock pins. Inspect annulus gear and driving gear teeth for damage. Replace distorted lock rings.

Assembly

Refer to Figure 84 for parts reference.

(1) Place rear annulus gear support in annulus gear and install snap ring.

(2) Position rear planetary gear assembly in rear annulus gear and place thrust washer on front side of planetary gear assembly.

(3) Insert output shaft in rear opening of rear annulus gear. Carefully work shaft through annulus gear support and planetary gear assembly. Make sure shaft splines are fully engaged in splines of annulus gear support.

(4) Install steel washer and snap ring on one end of sun gear. Insert sun gear through front side of driving shell, install rear steel washer and snap ring.

(5) Carefully slide driving shell and sun gear assembly on the output shaft, engaging sun gear teeth with rear planetary pinion teeth.

(6) Place front annulus gear support in the annulus gear and install snap ring.

(7) Position front planetary gear assembly in front annulus gear, place thrust washer over planetary gear assembly hub and install snap ring. Position thrust washer on rear side of planetary gear assembly.

(8) Carefully work front planetary and annulus gear assembly on output shaft, meshing planetary pinions with sun gear teeth.

(9) With all components properly positioned, install selective snap ring on front end of output shaft. Remeasure end play of the assembly. **The clearance can be adjusted by the use of various thickness snap rings. Snap rings are available in .040-.044, .048-.052 and .059-.065 inch thickness.**

PLANETARY GEAR TRAIN—A-727

Measure end play of planetary gear assemblies, sun

gear and driving shell before removing these parts from output shaft. With assembly in an upright position, push rear annulus gear support downward on output shaft. Insert a feeler gauge between rear annulus gear support hub and shoulder on output shaft (Fig. 83). The clearance should be .010 to .037 inch. If clearance exceeds specifications, replace thrust washers and/or necessary parts.

Disassembly

(1) Remove thrust washer from forward end of output shaft (Fig. 85).

(2) Remove selective snap ring from forward end of output shaft, then slide front planetary assembly off the shaft.

(3) Slide front annulus gear off planetary gear set (Fig. 85). Remove thrust washer from rear side of planetary gear set.

(4) Slide sun gear, driving shell and rear planetary assembly off output shaft.

(5) Lift sun gear and driving shell off rear planetary gear assembly. Remove thrust washer from inside the driving shell. Remove snap ring and steel washer from sun gear (rear side of driving shell) and slide sun gear out of the shell. Remove front snap ring from sun gear if necessary. Note that front end of sun gear is longer than rear.

(6) Remove thrust washer from forward side of rear planetary gear assembly, remove planetary gear set and thrust plate from rear annulus gear.

Inspection

Inspect bearing surfaces on output shaft for nicks, burrs, scores or other damage. Light scratches, small nicks or burrs can be removed with crocus cloth or a fine stone. Inspect speedometer drive gear for any nicks or burrs, and remove with a sharp edged stone. Make sure all oil passages in shaft are open and clean.

Inspect bushings in sun gear for wear or scores, replace sun gear assembly if bushings are damaged. Inspect all thrust washers for wear and scores, replace if damaged or worn below specifications. Inspect thrust faces of planetary gear carriers for wear, scores or other damage, replace as required. Inspect planetary gear carrier for cracks and pinions for broken or worn gear teeth and for broken pinion shaft lock pins. Inspect annulus gear and driving gear teeth for damage. Replace distorted lock rings.

Assembly

Refer to Figure 85 for parts reference.

(1) Install rear annulus gear on the output shaft. Apply a thin coat of grease on thrust plate, place it on the shaft and in the annulus gear making sure teeth are over the shaft splines.

(2) Position rear planetary gear assembly in the rear annulus gear. Place thrust washer on front side of planetary gear assembly.

(3) Install snap ring in front groove of sun gear (long end of gear). Insert sun gear through front side of driving shell, install rear steel washer and snap ring.

(4) Carefully slide driving shell and sun gear assembly on output shaft, engaging sun gear teeth with rear planetary pinion teeth. Place thrust washer inside the front driving shell.

(5) Place thrust washer on rear hub of front planetary gear set, then slide assembly into front annulus gear.

(6) Carefully work front planetary and annulus gear assembly on output shaft, meshing planetary pinions with the sun gear teeth.

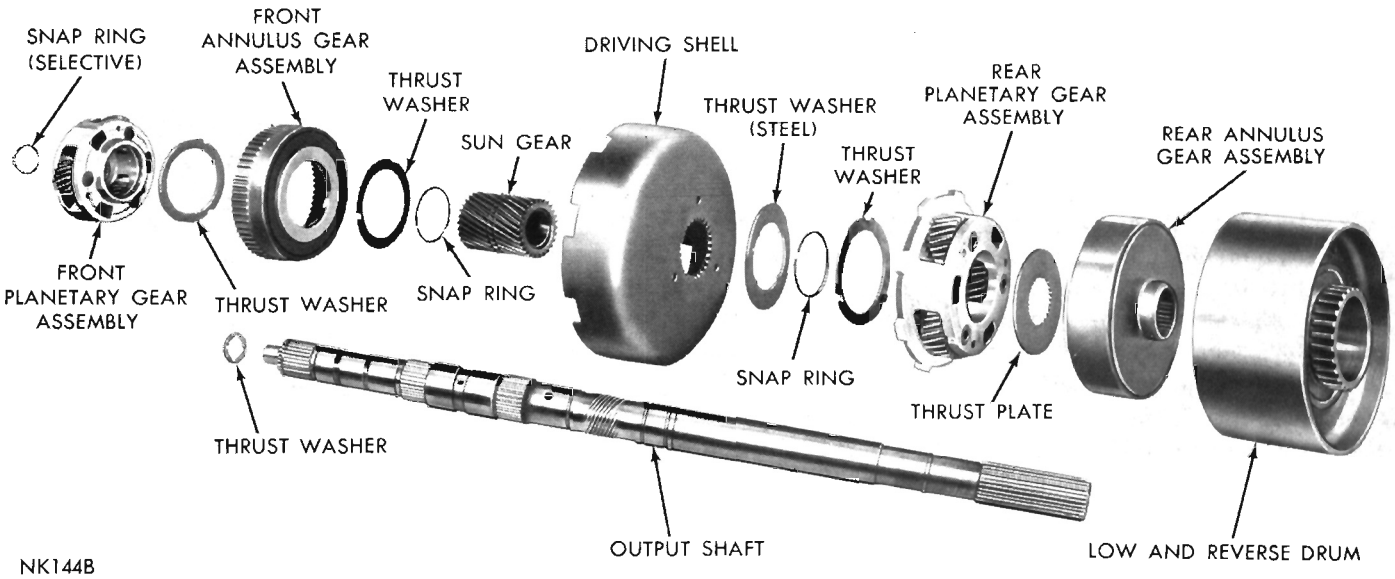

Fig. 85—Planetary Gear Train and Ouput Shaft Disassembled (A-727)

(7) With all components properly positioned, install selective snap ring on front end of output shaft. Remeasure end play of the assembly. **The clearance can be adjusted by the use of various thickness snap rings. Snap rings are available in .048-.052, .055-.059 and .062-.066 inch thickness.**

OVERRUNNING CLUTCH

Inspection

Inspect clutch rollers for smooth round surfaces, they must be free of flat spots and chipped edges. Inspect roller contacting surfaces in the cam and race for brinelling. Inspect roller springs for distortion, wear or other damage.

A-727: Inspect cam set screw for tightness. If loose, tighten and restake the case around screw.

Overrunning Clutch Cam Replacement—A-904

If overrunning clutch cam or spring retainer are found damaged, they can be replaced with a service replacement cam, spring retainer, and retaining bolts (Fig. 86). The service parts are retained in the case with bolts instead of rivets. To install, proceed as follows:

(1) Remove four bolts securing output shaft support to rear of the transmission case. Drive support rearward out of the case with a wood block and hammer.

(2) Center punch the rivets **exactly** in center of each rivet head (Fig. 87).

(3) Drill through each rivet head with a 3/8 inch drill. **Be careful not to drill into the transmission case.** Chip off rivet heads with a small chisel, then drive rivets and cam from the case with a blunt punch of proper size.

(4) Carefully enlarge rivet holes in the case with a 17/64 inch drill. Remove all chips and foreign matter from the case, make sure cam area is free of chips and burrs.

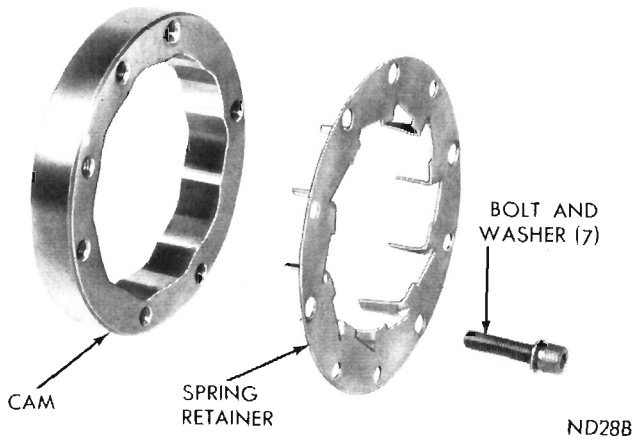

Fig. 86—Overrunning Clutch Service Replacement Cam (A-904)

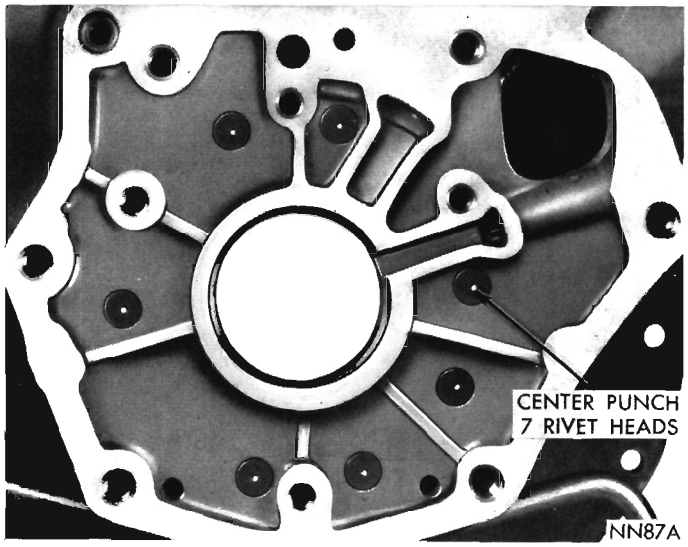

Fig. 87—Center Punch Rivet Heads (A-904)

(5) To install, position cam and roller spring retainer in the case. Align cam bolt holes with holes in the case, then thread all seven retaining bolt and washer assemblies into cam a few turns. The cone washers must be installed so inner diameter is coned toward the bolt head (Fig. 88).

(6) Tap cam firmly into the case if necessary. Draw retaining bolts down evenly, then tighten to 100 inch-pounds.

(7) Screw two pilot studs, Tool C-3288 into the case (Fig. 89). Chill the support with ice (preferably dry ice). Quickly position support over the pilot studs, and drive it firmly into the case with a wood block and hammer.

Overrunning Clutch Cam Replacement—A-727

If overrunning clutch cam and/or roller spring re-

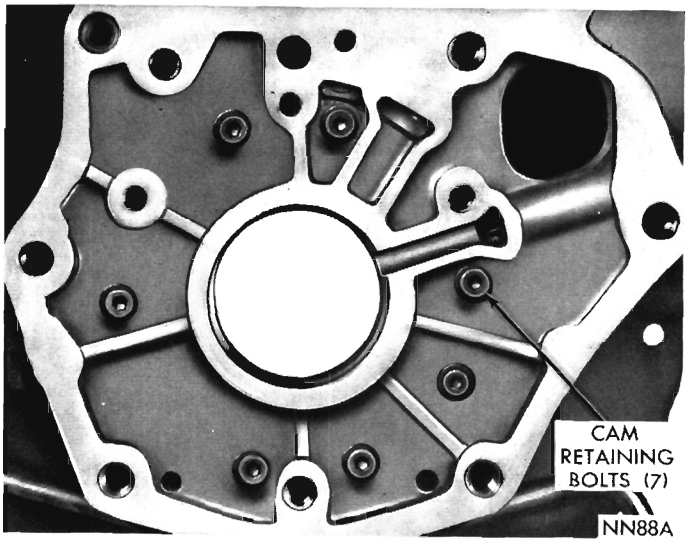

Fig 88—Cam Retaining Bolts Installed (A-904)

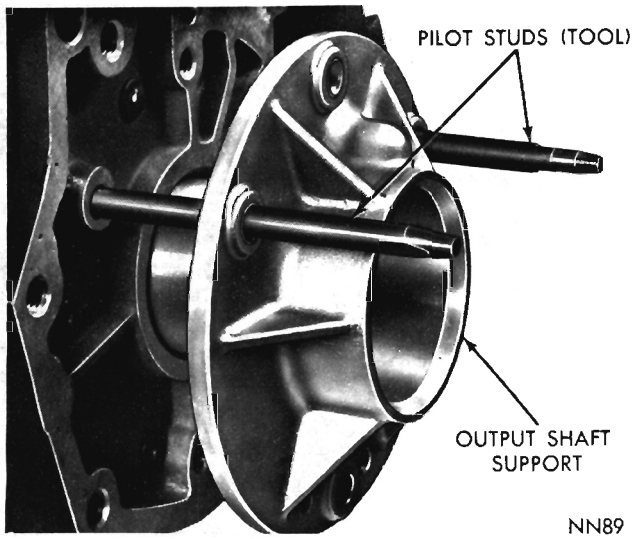

Fig. 89—Installing Output Shaft Support (A-904)

tainer are found damaged, replace cam and spring retainer in the following manner:

(1) Remove set screw from the case below clutch cam.

(2) Remove four bolts securing output shaft support to rear of transmission case. Insert a punch through bolt holes and drive cam from the case (Fig. 90). Alternate punch from one bolt hole to another so cam will be driven evenly from the case.

IMPORTANT: The output shaft support must be in the case to install the overrunning clutch cam.

If the support requires replacement, drive it rearward out of the case with a wood block and hammer. To install, screw two C-3288 pilot studs into the case (Fig. 91). Chill the support with ice (preferably dry ice). Quickly position support over the pilot studs, and drive it firmly into the case with a wood block and hammer.

(3) Clean all burrs and chips from cam area in the case.

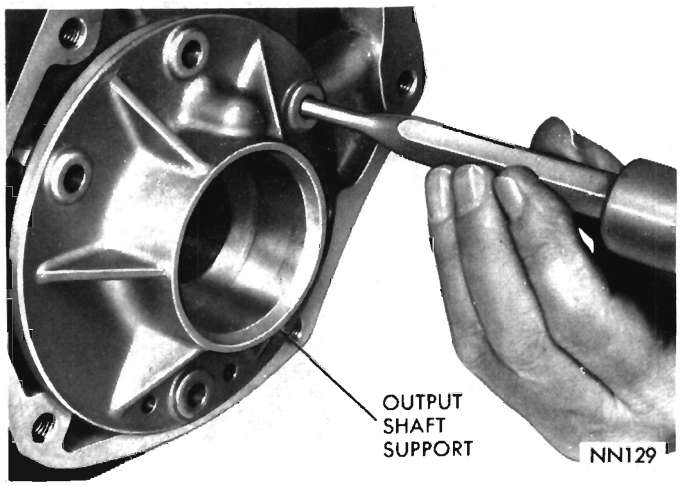

Fig. 90—Removing Overunning Clutch Cam (A-727)

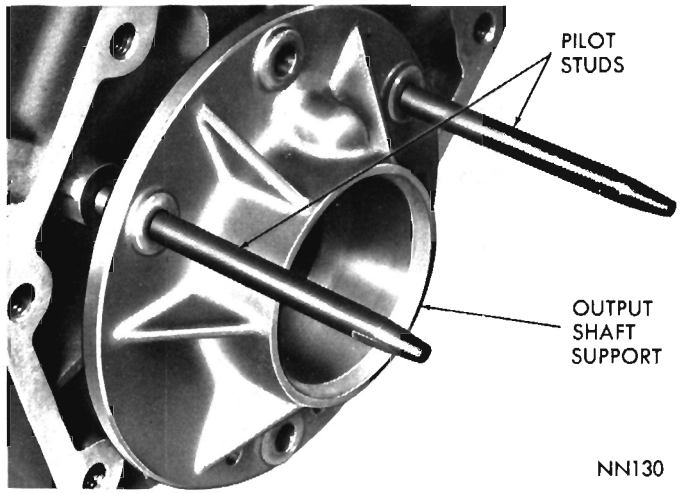

Fig. 91—Installing Output Shaft Support (A-727)

(4) Place spring retainer on the cam, making sure retainer lugs snap firmly into notches on the cam.

(5) Position cam in the case with cam serrations aligned with those in the case. Tap cam **evenly** into the case as far as possible with a soft mallet.

(6) Install Tool C-3863 and Adapter SP-5124 as shown in Figure 92, tighten nut on tool to seat cam into the case. Make sure cam is firmly bottomed, then install cam retaining set screw. Stake the case around set screw to prevent it coming loose.

(7) Remove cam installing tool. Install and tighten support retaining screws to 140 inch-pounds. Stake the case around cam in twelve places with a blunt chisel (Fig. 93).

KICKDOWN SERVO AND BAND

Inspection

Figure 94 shows a disassembled view of the kickdown servo assembly. **The larger outer spring shown in Figure 94 is not used in A-904 transmissions. Also,**

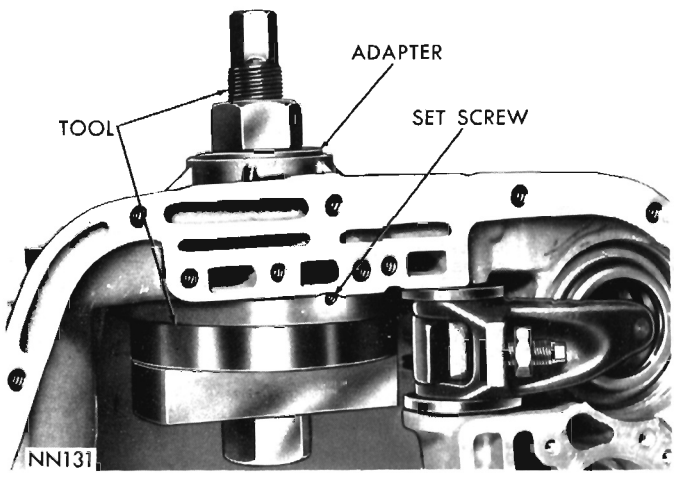

Fig. 92—Installing Overrunning Clutch Cam (A-727)

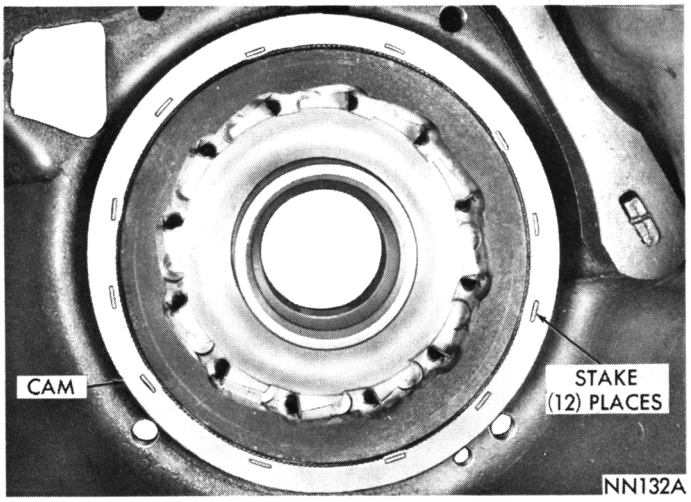

Fig. 93—Overrunning Clutch Cam Staked (A-727)

it is not used in maximum performance vehicles with A-727 transmissions.

Inspect piston and guide seal rings for wear, and make sure they turn freely in the grooves. It is not necessary to remove seal rings unless conditions warrant. Inspect piston for nicks, burrs, scores and wear. Inspect piston bore in the case for scores or other damage. Inspect fit of guide on piston rod. Inspect piston spring for distortion.

Inspect band lining for wear and bond of lining to the band. Inspect lining for black burn marks, glazing, non-uniform wear pattern and flaking. If lining is worn so grooves are not visible at ends or any portion of the bands, replace the band. Inspect band for distortion or cracked ends.

LOW—REVERSE SERVO AND BAND

Disassembly

(1) Remove snap ring from piston and remove the piston plug and spring (Fig. 95).

Inspection

Inspect seal for deterioration, wear and hardness. Inspect piston and piston plug for nicks, burrs, scores and wear; piston plug must operate freely in the piston. Inspect piston bore in the case for scores or other damage. Inspect springs for distortion.

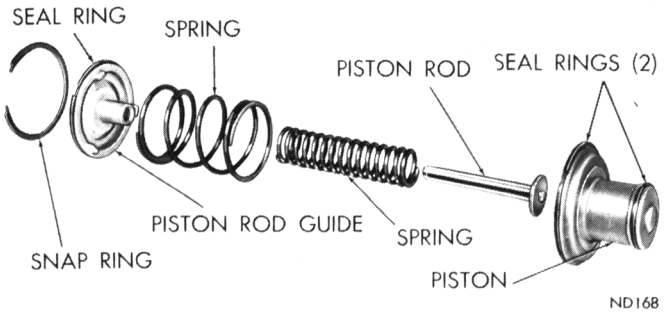

Fig. 94—Kickdown Servo

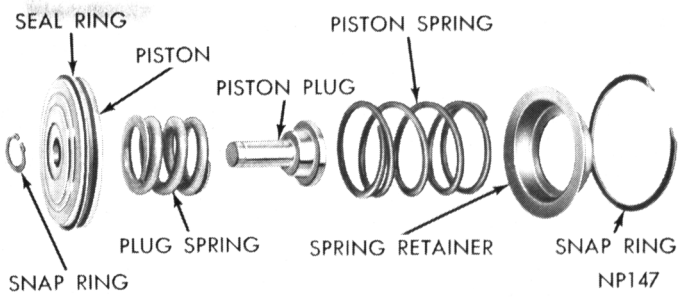

Fig. 95—Low and Reverse Servo

Inspect band lining for wear and bond of lining to the band. If lining is worn so grooves are not visible at ends or any portion of the band, replace the band. Inspect band for distortion or cracked ends.

Assembly

(1) Lubricate and insert piston plug and spring in the piston, and secure with snap ring.

ASSEMBLY—SUB-ASSEMBLY INSTALLATION

The assembly procedures given here include installation of sub-assemblies in the transmission case and adjusting drive train end play. Do not use force to assemble mating parts. If parts do not assemble freely investigate the cause, and correct the trouble before proceeding with assembly procedures. Always use new gaskets during assembly operations.

IMPORTANT: Use only Automatic Transmission Fluid AQ-ATF Suffix "A" or (Dexron) to lubricate transmission parts during assembly.

Overrunning Clutch

(1) With transmission case in an upright position, insert clutch hub inside the cam. Install overrunning clutch rollers and springs exactly as shown in Figure 96.

Low Reverse Servo and Band

(1) Carefully work servo piston assembly into the case with a twisting motion. Place spring, retainer and snap ring over the piston (Fig. 95).

(2) Compress low and reverse servo piston spring by using engine valve spring compressor Tool C-3422, then install snap ring.

(3) Position rear band in the case, install short strut, then connect long link and anchor to the band (Fig. 97). Screw in band adjuster just enough to hold strut in place. Install low-reverse drum.

A-727: Be sure long link and anchor assembly is installed, as shown in Figure 96 to provide running clearance for the low and reverse drum.

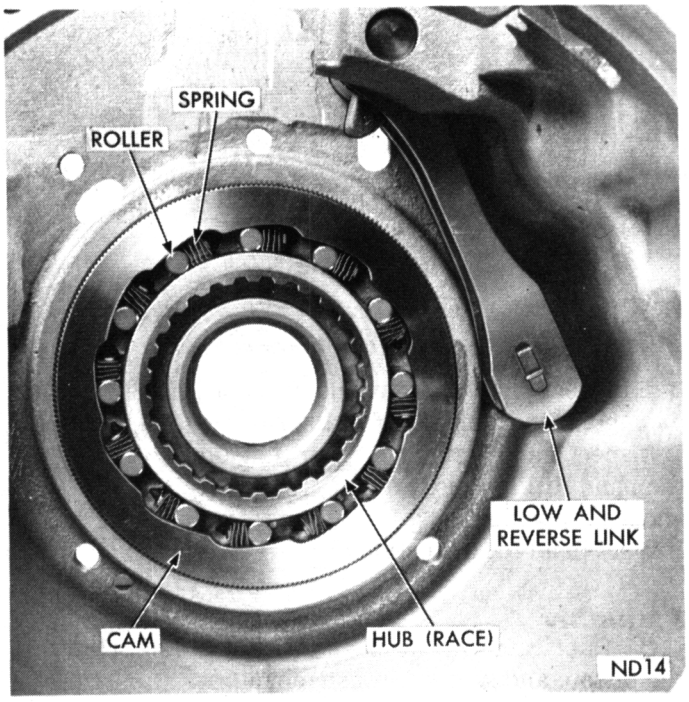

Fig. 96—Overrunning Clutch, Low and Reverse Band Link

Low-Reverse Band A-904-LA (318 Cu. In. Engine Only)

This transmission has a double-wrap band supported at two points by a band reaction pin in the case and acted upon at one point by the servo lever adjusting screw (Fig. 98 and 99).

(1) Push band reaction pin (with new "O" ring) into case flush with gasket surface (Fig. 98).

(2) Place band into case resting two lugs against band reaction pin (Fig. 99).

(3) Install low-reverse drum into overrunning clutch and band.

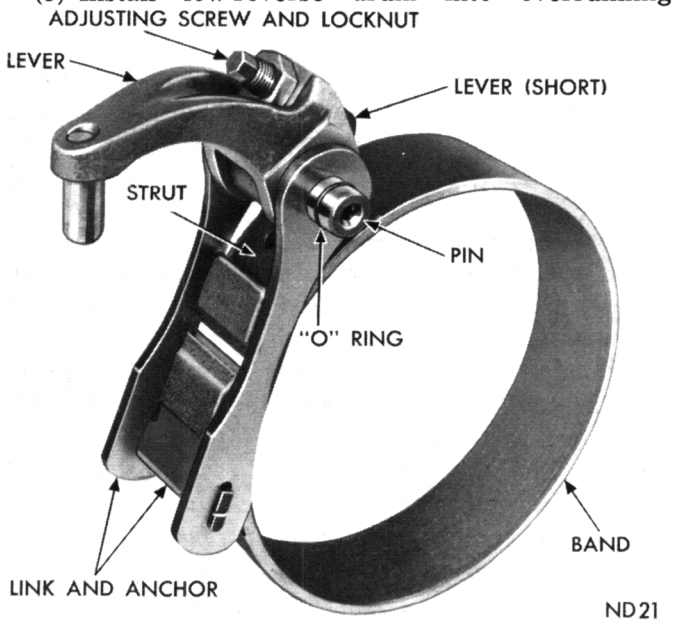

Fig. 97—Low-Reverse Band and Linkage

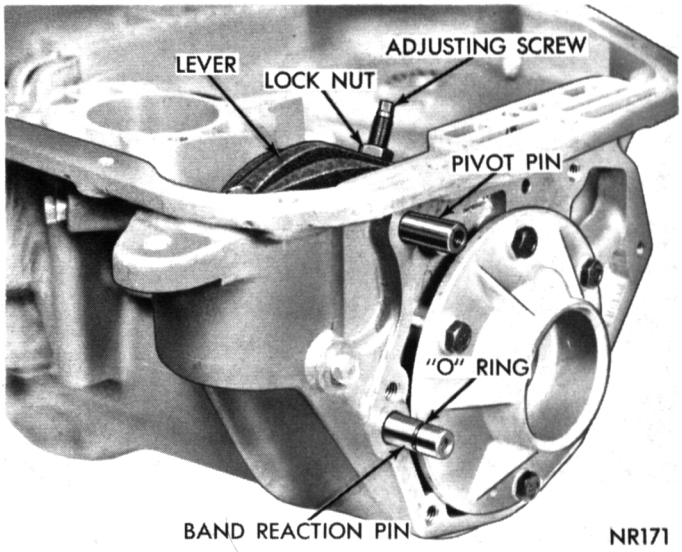

Fig. 98—Double Wrap Band Linkage—Installed (A-904-LA Transmission only)

(4) Install operating lever with pivot pin flush in case and adjusting screw touching center lug on band (Fig. 99).

Kickdown Servo

(1) Carefully push servo piston into the case bore. Install piston rod, two springs and guide (Fig. 94). **The A-904 transmissions use one small spring only. Also, one small spring only is used in the maximum performance vehicles with A-727 transmissions.**

(2) Compress kickdown servo springs by using engine valve spring compressor Tool C-3422, then install snap ring.

Planetary Gear Assemblies, Sun Gear, and Driving Shell

(1) While supporting assembly in the case, insert output shaft through rear support. Carefully work as-

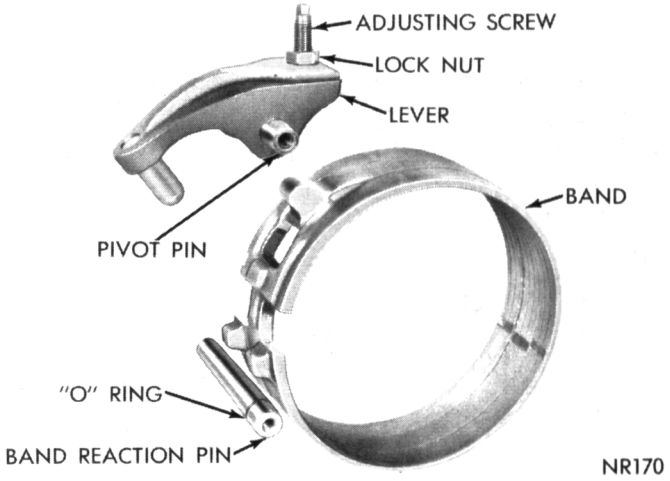

Fig. 99—Double Wrap Band and Linkage—Disassembled (A-904-LA Transmission only)

sembly rearward engaging rear planetary carrier lugs into low-reverse drum slots.

CAUTION: Be very careful not to damage ground surfaces on output shaft during installation.

Front and Rear Clutch Assemblies

The front and rear clutches, front band, oil pump and reaction shaft support are more easily installed with transmission in an upright position.

If transmission repair stand DD-1014 was not available to support transmission, an alternate method is outlined in Steps 1 and 2.

(1) Cut a 3-1/2 inch diameter hole in a bench, in the end of a small oil drum or a large wooden box strong enough to support transmission. Cut or file notches at edge of the 3-1/2 inch hole so output shaft support will fit and lay flat in the hole.

(2) Carefully insert output shaft into hole to support the transmission upright, with its weight resting on flange of the output shaft support.

(3) **A-904:** Apply a coat of grease to selective thrust washer (Fig. 84) and install washer on front end of the output shaft. If drive train end play was not within specifications (.030 to .089 inch), when tested before dissassembly, replace thrust washer with one of proper thickness.

The following selective washers are available for A-904 transmissions.

Thickness	Color
.052-.054 inch	Natural
.068-.070 inch	Red
.083-.085 inch	Black

A-727: Apply a coat of grease on the input to output shaft thrust washer (Fig. 85), and install washer on front end of the output shaft.

(4) Align front clutch plate inner splines, and place assembly in position on the rear clutch. Make sure front clutch plate splines are fully engaged on rear clutch splines.

(5) Align rear clutch plate inner splines, grasp input shaft and lower the two clutch assemblies into the transmission case.

(6) Carefully work clutch assemblies in a circular motion to engage rear clutch splines over splines of front annulus gear. Make sure front clutch drive lugs are fully engaged in slots in the driving shell.

Front Band

Figure 100 shows a disassembled view of the kickdown band assembly.

(1) Slide band over front clutch assembly.

(2) Install band strut, screw in adjuster just enough to hold strut and anchor in place.

Oil Pump and Reaction Shaft Support

If difficulty was encountered in removing pump assembly due to an exceptionally tight fit in the case, it may be necessary to expand the case with heat during

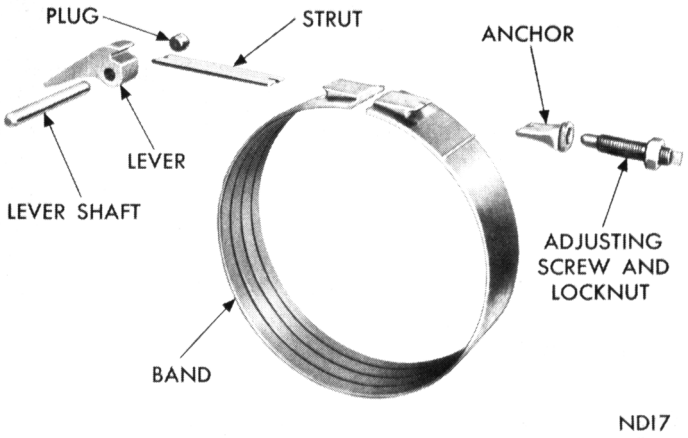

Fig. 100—Kickdown Band and Linkage

pump installation. Using a suitable heat lamp, heat the case in area of pump for a few minutes prior to installing pump and reaction shaft support assembly.

A-904: Install thrust washer on reaction shaft support hub (Fig. 58).

A-727: If drive train end play was not within specifications (.037 -.084 inch) when measured before disassembly, replace thrust washer on reaction shaft support hub with one of proper thickness (Fig. 63).

The following selective thrust washers are available for A-727 transmissions.

Thickness	Color
.061-.063 inch	Green
.084-.086 inch	Red
.102-.104 inch	Yellow

(1) Screw two pilot studs, Tool C-3288 in pump opening in the case (Fig. 101). Install a new gasket over the pilot studs.

(2) Place a new rubber seal ring in the groove on

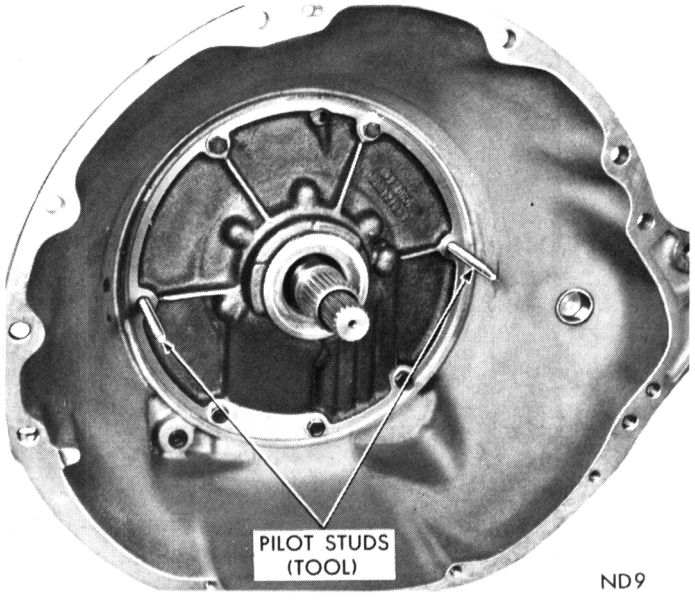

Fig. 101—Installing Pump and Reaction Shaft Support Assembly

outer flange of pump housing. Make sure seal ring is not twisted. Coat seal ring with grease for easy installation.

(3) Install pump assembly in the case; tap it lightly with a soft mallet, if necessary. Place deflector over vent opening and install four pump body bolts. (The A-904 does not use a deflector over vent opening.) Remove pilot studs, install remaining bolts and snug down evenly.

Rotate input and output shafts to see if any binding exists, then tighten bolts to 175 inch-pounds. Check shafts again for free rotation.

Governor and Support

(1) Position support and governor body assembly on the output shaft. Align assembly so governor valve shaft hole in governor body aligns with hole in output shaft, then slide assembly into place. Install snap ring behind the governor body (Fig. 33). Tighten body to support bolts to 100 inch-pounds. Bend ends of lock straps against bolt heads.

(2) Place governor valve on valve shaft, insert assembly into body and through governor weights. Install valve shaft retaining snap ring.

Output Shaft Bearing and Extension Housing

(1) Install a snap ring in the front groove on output shaft. Install bearing on shaft with its outer race ring groove toward front (Fig. 32). Press or tap bearing tight against front snap ring, then install rear snap ring.

(2) Place a new extension housing gasket on the transmission case. Position output shaft bearing retaining snap ring in the extension housing. Spread snap ring as far as possible (Fig. 31), then carefully tap extension housing into place. **Make sure snap ring is fully seated in the bearing groove.**

(3) Install and tighten extension housing bolts to 24 foot-pounds.

(4) Install gasket, plate and two screws on bottom of extension housing mounting pad.

(5) Install speedometer pinion and adapter assembly.

IMPORTANT: Measure drive train end play as described under Disassembly Sub-Assembly Removal. Correct if necessary.

Valve Body Assembly and Accumulator Piston

(1) Clean mating surfaces and inspect for burrs on both the transmission case and valve body steel plate.

(2) Install accumulator piston in transmission case and place piston spring on the accumulator piston (Fig. 102). Make sure Back-Up Light and Neutral Start Switch has been removed.

(3) Insert parking lock rod through opening in rear of case with the knob positioned against the reaction plug and sprag. Move front end of rod toward center of transmission while exerting rearward pressure on rod to force it past the sprag (rotate output shaft if necessary).

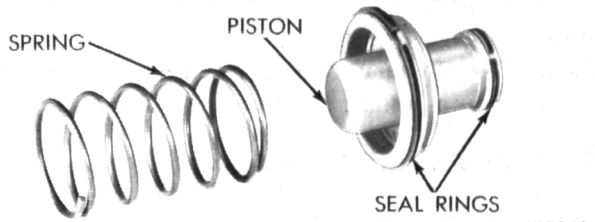

Fig. 102—Accumulator Piston and Spring

(4) Place valve body manual lever in **LOW** position. Place valve body in its approximate position in the case, connect parking lock rod to manual lever and secure with E-clip. Align valve body in the case, install retaining bolts finger tight.

(5) With neutral starting switch installed, place manual valve in the neutral position. Shift valve body if necessary to center neutral finger over the neutral switch plunger. Snug bolts down evenly, then tighten to 100 inch-pounds.

(6) Install gearshift lever and tighten clamp bolt. Check lever shaft for binding in the case by moving lever through all detent positions. If binding exists, loosen valve body bolts and re-align.

(7) Install flat washer and throttle lever, then tighten lever clamp bolt.

(8) Adjust kickdown and low-reverse bands.

(9) Install oil pan, using a new gasket. Tighten pan bolts to 150 inch-pounds.

TRANSMISSION—CONVERTER AND DRIVE PLATE INSTALLATION

The transmission and converter must be installed as an assembly; otherwise, the converter drive plate, pump bushing, and oil seal will be damaged. The drive plate will not support a load; therefore, none of the weight of transmission should be allowed to rest on the plate during installation.

(1) Rotate pump rotors with Tool C-3756 (A-904) or Tool C-3881 (A-727) until the two small holes in handle are vertical (Fig. 103).

(2) Carefully slide converter assembly over input shaft and reaction shaft. Make sure converter impeller shaft slots are also vertical and fully engage pump inner rotor lugs.

Test for full engagement by placing a straight edge on face of the case (Fig. 104). The surface of converter front cover lug should be at least 1/2 inch to rear of straight edge when converter is pushed all way into the transmission.

(3) Attach a small "C" clamp to edge of bell hous-

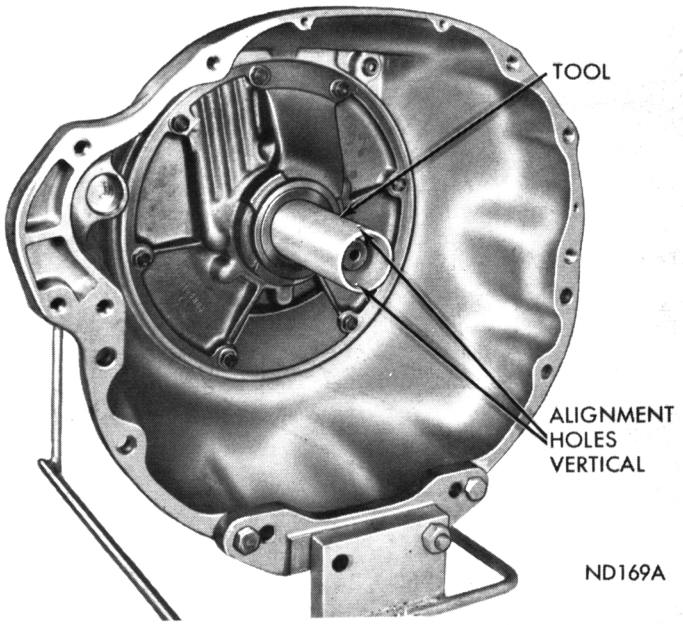

Fig. 103—Aligning Pump Rotors

ing to hold converter in place during transmission installation.

(4) Inspect converter drive plate for distortion or cracks and replace if necessary. Torque Drive Plate to Crankshaft bolts to 55 foot-pounds. **When Drive Plate replacement has been necessary, make sure transmission dowel pins are in engine block and protruding far enough to hold transmission in alignment.**

(5) Coat converter hub hole in crankshaft with wheel bearing grease. Place transmission and converter assembly on a service jack and position assembly under vehicle for installation. Raise or tilt as necessary until transmission is aligned with engine.

(6) Rotate converter so mark on converter (made during removal) will align with mark on drive plate.

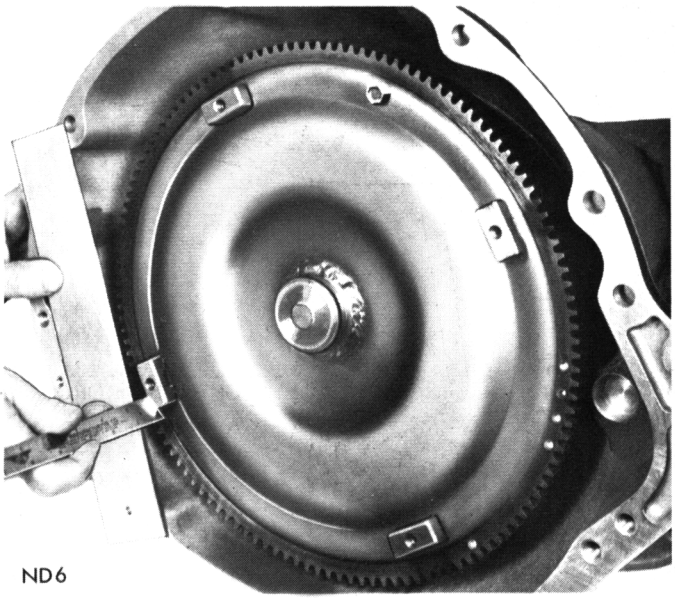

Fig. 104—Measuring Converter for Full Engagement in Transmission

The offset holes in plate are located next to 1/8 inch hole in the inner circle of plate. A stamped V mark identifies the offset hole in converter front cover (Fig. 105). Carefully work transmission assembly forward over engine block dowels with converter hub entering the crankshaft opening.

(7) After transmission is in position, install bell housing bolts and tighten to 28 foot-pounds.

(8) Install and tighten the two lower drive plate to converter bolts to 270 inch-pounds.

(9) Install starting motor and connect battery ground cable.

(10) Rotate engine with remote control switch and install the other two drive plate to converter bolts. Tighten bolts to 270 inch-pounds.

(11) Install crossmember (Fig. 106, 107 or 108) and tighten attaching bolts to 90 foot-pounds. Lower transmission so extension housing is aligned and rests on rear mount. Install bolts and tighten to 40 foot-pounds.

FURY MODELS ONLY (Fig. 108). Engine mount to center crossmember bolt and nut, loose assembled to this point, should now be torqued to 75 foot-pounds.

(12) Install gearshift torque shaft and connect gearshift rod to the transmission lever.

Console Shift: Align gearshift torque shaft lower bracket with the extension housing. Install the two retaining bolts and tighten securely. Connect gearshift rod to the transmission lever.

(13) Carefully guide sliding yoke into extension housing and on the output shaft splines. Then connect propeller shaft to rear axle pinion shaft yoke.

(14) Connect oil cooler lines to the transmission

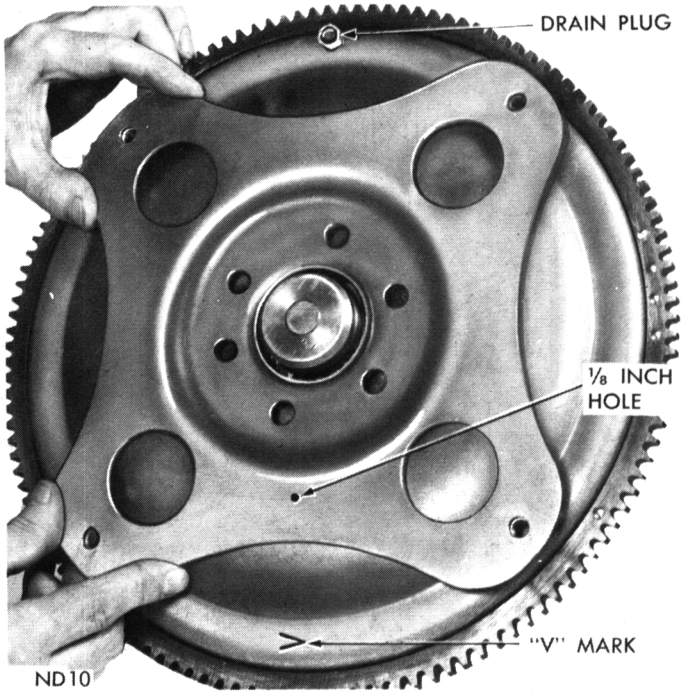

Fig. 105—Converter and Drive Plate Markings

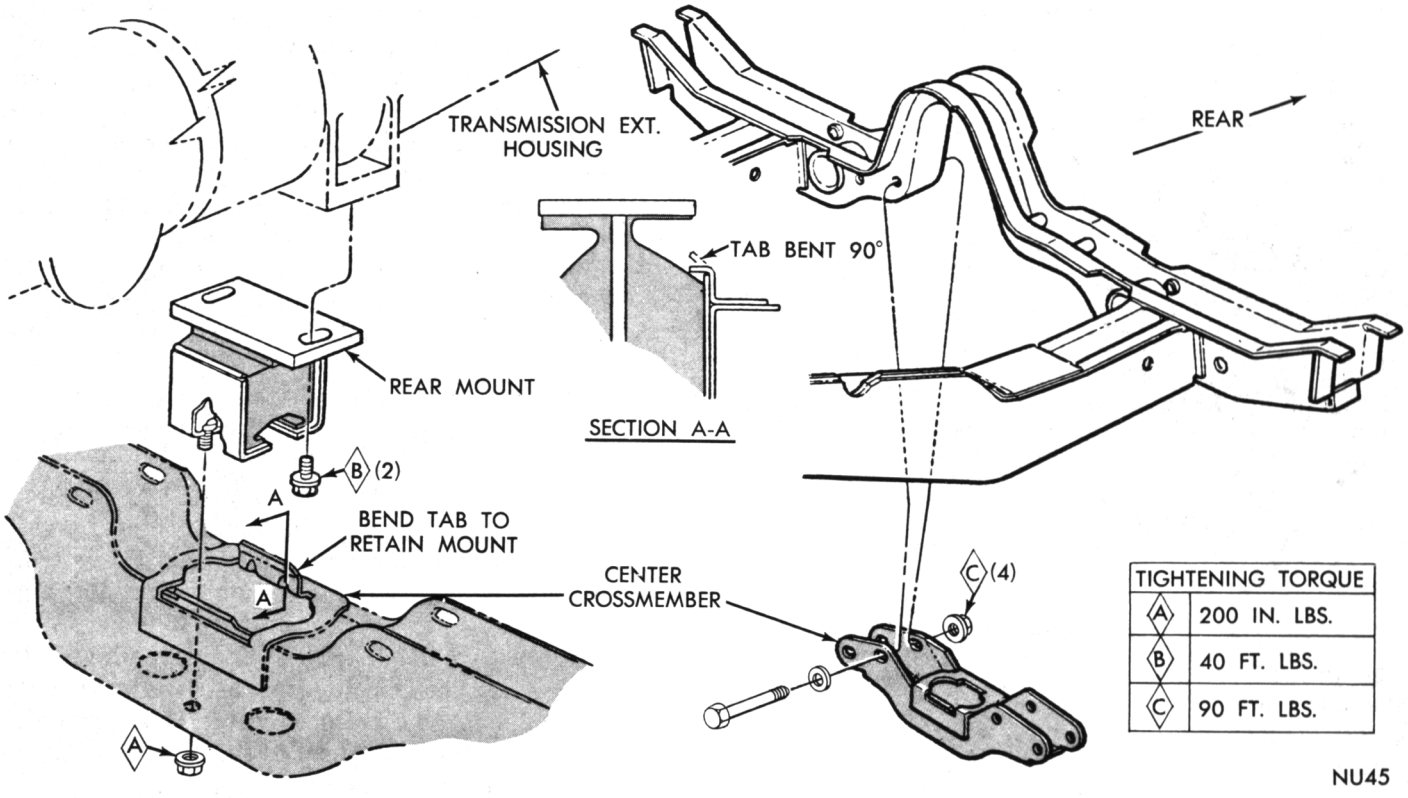

Fig. 106—Center Crossmember and Rear Engine Mount (Valiant, Barracuda)

and install oil filler tube. Connect the speedometer cable.

(15) Connect throttle rod to the transmission throttle lever.

(16) Connect wire to the Back-up light and neutral starting switch.

(17) Install cover plate in front of the converter assembly.

(18) Install the transmission case to cylinder block brace. **The converter cover plate must be between case and brace. The oil line bracket is attached in front of the brace. Tighten bolts holding brace to the case before attaching brace to the cylinder block.**

(19) Refill transmission with Automatic Transmission Fluid AQ-ATF Suffix "A" or "Dexron".

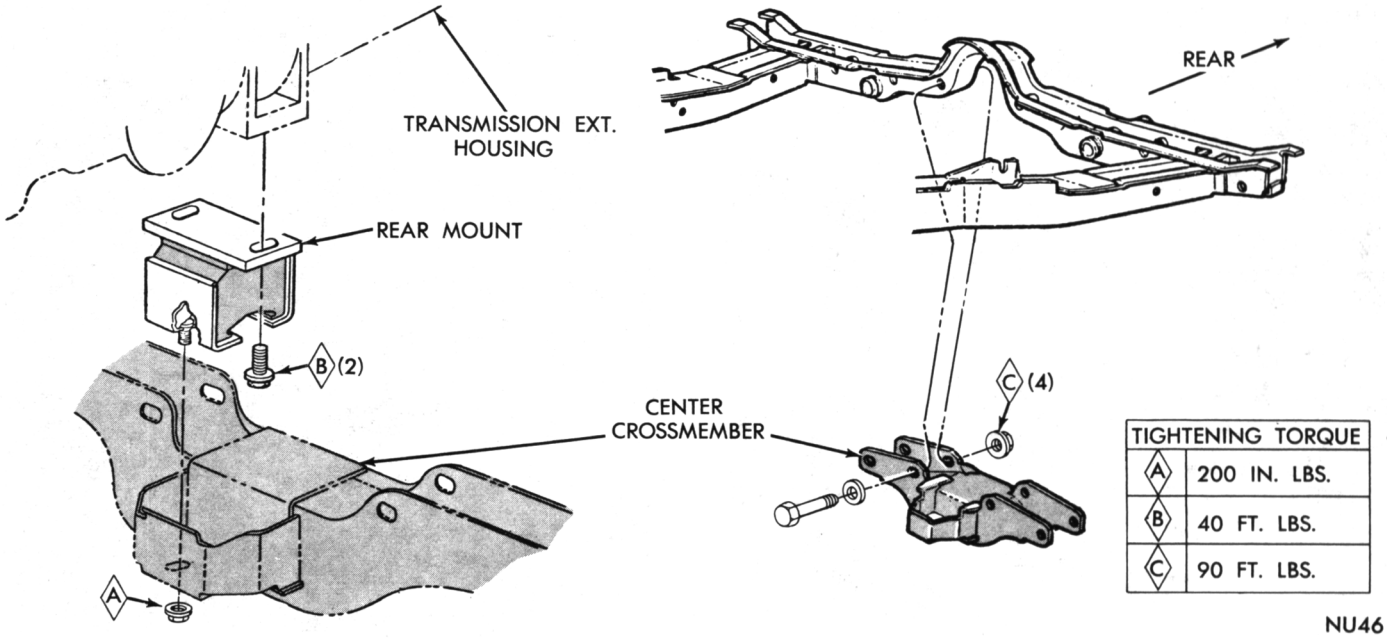

Fig. 107—Center Crossmember and Rear Engine Mount (Satellite)

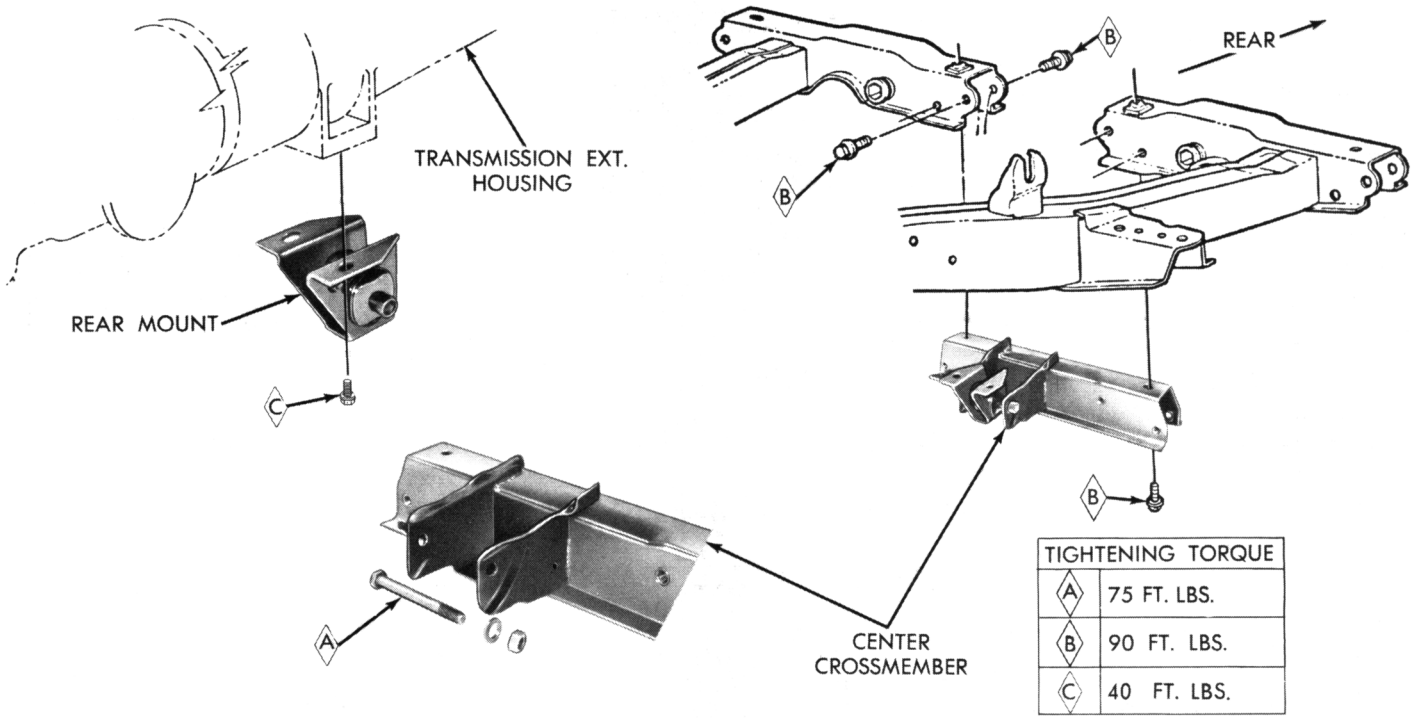

Fig. 108—Center Crossmember and Rear Engine Mount (Fury)

SPECIFICATIONS

3-SPEED TRANSMISSIONS

Engine Displacement (Cu. In.)	170	225	Taxi/ Police 225	273, 318	383
Trans. Models	A-903		A-745	A-745	A-745
Gear Ratio					
First	3.22	2.95	3.02	3.02	2.55
Second	1.84	1.83	1.76	1.76	1.49
Third	1.00	1.00	1.00	1.00	1.00
Reverse	4.14	3.80	3.95	3.95	3.34
Downshift Speed Limits					
3rd to 2nd	40 to 10 mph				
2nd to 1st	Zero mph				
Lubricant					
Capacity	Approx. 6-1/2 Pts. (Imp. Meas. 5-1/2 Pts.)			Approx. 6 Pts. (Imp. Meas. 5 Pts.)	
Type	Auto. Trans. Fluid AQ—ATF Suffix "A" (Dexron)				
Gear Type	Helical				
Tolerances					
Second Speed Gear End Play	.002" to .016"				
Countershaft Gear End Play	.005" to .022"			.005" to .028"	
Clutch Housing Face Squareness	.006" Max.				
Clutch Housing Bore Run-Out	.008" Max.				
Synchronizer Float	.060" to .117"				

4-SPEED TRANSMISSION

Trans. Model	A-833
	4 Forward Speeds

Gear Ratio	Std.	Heavy Duty
First	2.66	2.65
Second	1.91	1.93
Third	1.39	1.39
Fourth	1.00	1.00
Reverse	2.58	2.58

Gear Type	Helical (Except Reverse)
Tolerances	
Countershaft Gear End Play	.015" to .029"
Clutch Housing Face Run-Out	.006" Max.
Clutch Housing Bore Run-out	.008" Max.

Lubricant—Capacity and Type

	U.S.	Imp.
Valiant, Barracuda	7 Pts.	5-3/4 Pts.
Satellite	7-1/2	6-1/4
Fury	7-3/4	6-1/2

Warm Climate—Multi-Purpose Gear Oil .... S.A.E. 140
Cold Climate—Multi-Purpose Gear Oil .... S.A.E. 80 or 90 or Auto Trans. Fluid "AQ-ATF Suffix "A" (Dexron)

Downshift Speed Limits

4th to 3rd	50 to 25 mph
3rd to 2nd	25 to 15 mph
2nd to 1st	15 to Zero mph

SPEEDOMETER PINION GEAR CHART

ALL CAR LINES—ALL TRANSMISSIONS

Tire Size	Axle Ratio 2.71:1 No. of Teeth	Axle Ratio 2.76:1 No. of Teeth	Axle Ratio 2.93:1 No. of Teeth	Axle Ratio 2.94:1 No. of Teeth	Axle Ratio 3.23:1 No. of Teeth	Axle Ratio 3.31:1 No. of Teeth	Axle Ratio 3.54:1 No. of Teeth	Axle Ratio 3.55:1 No. of Teeth	Axle Ratio 3.91:1 No. of Teeth	Axle Ratio 4.10:1 No. of Teeth
6.50 x 13		30	32		35			39	43	
7.00 x 13		29	31		34			38	41	
D70 x 14		29	31		34			37	41	
E70 x 14		29	30		33			37	40	
F70 x 14	28	28	30	30	32		36	36	39	41
6.95 x 14		29	31		34			37	41	
7.35 x 14	28	28	30	30	33			36	40	
7.75 x 14	27	27	29	29	32	33		35	39	
8.25 x 14	27	27	29	29	32	32		35	38	
8.55 x 14		26	28	28	31	31		34	37	
7.75 x 15	27	27	29	29	32	33		35	38	
F70 x 15					32		35	35	38	40
G70 x 15	27	27		29	31	32		35		
8.25 x 15	26	27	28	28	31	32		34	38	
8.55 x 15	26	26		28	31	31		34		
8.85 x 15		26		27	30	31		33		
9.15 x 15		26		27	30	31		33		

TORQUEFLITE TRANSMISSIONS

Transmission Models	A-904		A-727	
TYPE	Automatic Three Speed with Torque Converter			
TORQUE CONVERTER DIAMETER (Std.)	10-3/4 inches		11-3/4 inches	
(High Perf.)			10-3/4 inches	
OIL CAPACITY—TRANSMISSION AND TORQUE CONVERTER (Std.)	U.S. Measure 15-1/2 Pts.	Imperial Measure 13 Pts.	U.S. Measure 18-1/2 Pts.	Imperial Measure 15-1/2 Pts.
(High Perf.)			15-1/2 Pts.	13 Pts.
Use Automatic Transmission Fluid Labeled Type AQ-ATF, Suffix "A" or "Dexron"				
COOLING METHOD	Water-Heat Exchanger			

Transmission Models	A-904	A-727
LUBRICATION	Pump (Rotor Type)	
CLUTCHES		
Number of Front Clutch Plates	3 (170-225 Cu. In. Eng.) 4 (273-318 Cu. In. Eng.)	3 (225-318 Cu. In. Eng.) 4 (383-440 Cu. In. Eng.) 5 (426 Cu. In. Eng.)
Number of Front Clutch Discs	3 (170-225 Cu. In. Eng.) 4 (273-318 Cu. In. Eng.)	3 (225-318 Cu. In. Eng.) 4 (383-440 Cu. In. Eng.) 5 (426 Cu. In. Eng.)
Number of Rear Clutch Plates	2 (170-225 Cu. In. Eng.) 3 (273-318 Cu. In. Eng.)	3 —
Number of Rear Clutch Discs	3 (170-225 Cu. In. Eng.) 4 (273-318 Cu. In. Eng.)	4 —
GEAR RATIOS	First 2.45 to 1 Second 1.45 to 1	Third 1 to 1 Reverse 2.20 to 1
PUMP CLEARANCES		
Outer Rotor to Case Bore	.004″ to .008″	
Outer to Inner Tip	.005″ to .010″	
End Clearance—Rotors	.0015″ to .003″	
PLANETARY ASSY. END PLAY	.006″ to .033″	.010″ to .037″
DRIVE TRAIN END PLAY	.030 to .089	.037″ to .084″
CLUTCH PLATE CLEARANCE		
Front Clutch	.042 to .087″(3 Disc) .056 to .104″(4 Disc)	.036 to .086″(3 Disc) .024 to .125″(4 Disc) .066 to .123 (4 Disc High Perf.) .022 to .079″(5 Disc)
Rear Clutch	.032 to .055″	.025 to .045″
SNAP RINGS		
Front and Rear Clutches		
Rear Snap Ring (Selective)	.060 to .062″ .068 to .070″ .076 to .078″	.060 to .062″ .074 to .076″ .088 to .090″
Output Shaft (Forward End)	.040 to .044″ .048 to .052″ .059 to .065″	.048 to .052″ .055 to .059″ .062 to .066″
THRUST WASHERS		
Output Shaft to Input Shaft (Selective)	.052 to .054″ (Natural) .068 to .070″ (Red) .083 to .085″ (Black)	— — — — — —
Reaction Shaft Support to Front Clutch Retainer (Selective)	— — — — — —	.061 to .063″ (Green) .084 to .086″ (Red) .102 to .104″ (Yellow)
Driving Shell Thrust Plate—Steel (2)	.034 to .036″	—
Front Planetary Gear to Driving Shell	.060 to .062″	—
Rear Planetary Gear to Driving Shell	.060 to .062″	—
Front Annulus Gear Support	.121 to .125″	—
Front Clutch to Rear Clutch	.043 to .045″	—
Front Clutch to Reaction Shaft Support	.043 to .045″	—
Output Shaft to Input Shaft	—	.062 to .064″
Driving Shell Thrust Plate—Steel (1)	—	.034 to .036″
Rear Planetary Gear to Driving Shell	—	.062 to .064″
Front Planetary Gear to Annulus Gear	—	.062 to .064″
Front Annulus Gear to Driving Shell	—	.062 to .064″
Front Clutch to Rear Clutch	—	.061 to .063″
Rear Planetary Gear to Annulus Gear	—	.034 to .036″

Transmission Models	A-904		A-727	
BAND ADJUSTMENTS	Engines	Turns*	Engines	Turns*
Kickdown (Front)	All Except 170	2	All Except 426	2
	170 Cu. In.	2-5/8	426 Cu. In.	1-1/2
Low-Reverse (Internal)	All Except 318	3-1/4	All	2
	318 Cu. In.	4		

* Backed off from 72 inch-pounds.

TIGHTENING REFERENCE

Manual A-903, A-745 3-Speed	Foot Pounds
Back Up Light Switch	15
Extension Housing Bolts	50
Extension Housing to Cross Member Bolts	40
Front Bearing Retainer Bolts	30
Gearshift Operating Lever Nuts	18
Transmission to Clutch Housing Bolts	50
Transmission Cover Retaining Bolts	12
Transmission Drain Plug	25

Manual A-833 4-Speed	Foot Pounds
Back Up Light Switch	15
Crossmember Attaching Bolts	90
Drive Pinion Bearing, Retainer Bolts	30
Extension Housing to Case Bolts	50
Gearshift Housing Bolts	15
Gearshift Operating Lever Nuts	18
Reverse Detent Spring Retainer	50
Reverse Detent Spring Retainer Plug	24
Shift Lever Nuts	18
Transmission Drain Plug	25
Transmission to Clutch Housing Bolts	50

Torqueflite A-904 and A-727	Pounds Foot	Pounds Inch
Cooler Line Fitting		110
Cooler Line Nut		85
Converter Drain Plug		110
Converter Drive Plate to Crankshaft Bolt	55	
Converter Drive Plate to Torque Converter Bolt		270
Extension Housing to Transmission Case Bolt	24	
Extension Housing to Insulator Mounting Bolt	40	
Extension Housing—Crossmember to Frame Bolt	90	
Governor Body to Support Bolt		100
Kickdown Band Adjusting Screw Lock Nut A-727	29	
Kickdown Band Adjusting Screw Lock Nut A-904	25	
Kickdown Lever Shaft Plug		150
Neutral Starter Switch	24	
Oil Filler Tube Bracket Bolt		150
Oil Pan Bolt		150
Oil Pump Housing to Transmission Case Bolt		175
Output Shaft Support Bolt		150
Overrunning Clutch Cam Set Screw		40
Pressure Test Take-Off Plug		75
Reaction Shaft Support to Oil Pump Bolt A-727		150
A-904		125
Reverse Band Adjusting Screw Lock Nut A-727	35	
Reverse Band Adjusting Screw Lock Nut A-904	20	
Speedometer Drive Clamp Screw		100
Transmission to Engine Bolt	28	
Valve Body Screw		35
Valve Body to Transmission Case Bolt		100

WHEELS–BEARINGS–TIRES

CONTENTS

	Page
BEARINGS (FRONT WHEEL)	6
Removal (Without Disc Brakes)	6
Removal (With Disc Brakes)	6
Cleaning and Inspection	6
Lubrication	6
Installation (Without Disc Brakes)	7
Installation (With Disc Brakes)	7
Bearing Adjustment	7
GENERAL INFORMATION	1
SERVICE PROCEDURES	1
SPECIFICATIONS	7
TIGHTENING REFERENCE	12
TIRES	1
Care of Tires—Cleaning	1
Inflation of Tires	2
Radial Ply Tires	3
Rotation of Tires	2
Repairing Tire Leaks	3
Tire Noise Complaints	4
Tire Wear Patterns	4
Tire Tread Wear Indicators	4
Wide Tread 70 Series Tires	3
WHEELS	5
Tire—Wheel Balance	5
Tire and Wheel Runout	5
Wheel Covers	6

GENERAL INFORMATION

The original equipment two (2) ply four (4) ply rating conventional cross bias or bias breaker (bias belted) factory installed tires on your vehicle are designed and tested to meet all normal operating requirements. These tires are superior tires for the vehicle and provide the best overall performance for normal operation; furthermore, the ride and handling characteristics match the vehicle's requirements. With proper care they will give excellent reliability, traction, skid resistance and tread life.

Some 1969 vehicles will be equipped with bias breaker (bias belted) tires as standard original equipment. The bias breaker (bias belted) represents a complete departure in tire design. This type of tire construction has the body plies, or layers of cords, running at a bias or criss-crossed angle to the circumference (Fig. 1). In addition, a rugged two-ply glass fiber circumferenced belt is added directly under the tread.

The advantages of 2 ply four ply rating cross bias and bias breaker (bias belted) tires which are most important to the owner are: Superior ride and handling, improved fuel economy, and improved high speed durability because of cooler operating temperatures.

Tire wear and vehicle stability are affected greatly by tire size, tire pressures, wheel rim size, distribution of load within the vehicle, wheel alignment, road surface conditions, and driver operating habits.

Tires used at low speeds, in cool climates, and with light loads will have longer life than tires used for high speed driving in hot climates with heavy loads. Abrasive road surfaces will accelerate tire wear.

Driving habits have more effect on tire life than any other factor. Careful drivers will obtain, in most cases, much greater mileage than severe or careless drivers. Rapid acceleration and deceleration, severe application of brakes, high speed driving, taking turns at excessive speeds, striking curbs and other obstacles are just a few of the driving habits which will shorten the life of any tire.

To obtain maximum vehicle stability and tire life the vehicle should be equipped with the recommended suspension application including the proper tire size and the recommended full rated load should not be exceeded. See Minimum Tire Size Chart and Tire Pressure and Vehicle Load Chart in this section.

SERVICE PROCEDURES

TIRES

Care of Tires—Cleaning

Some white side wall tires have a colored protective coating that should be removed from the tires before delivery of the car. This protective coating is not as flexible as rubber and will crack. This may introduce sidewall checking if not removed. In no case should the tires be driven more than 50 miles before this coating is removed.

To remove this coating, wet the tire surface thoroughly with warm water and allow it to soak for one minute. Using a soft bristle brush or sponge, wash the protective coating from the tire. This coating

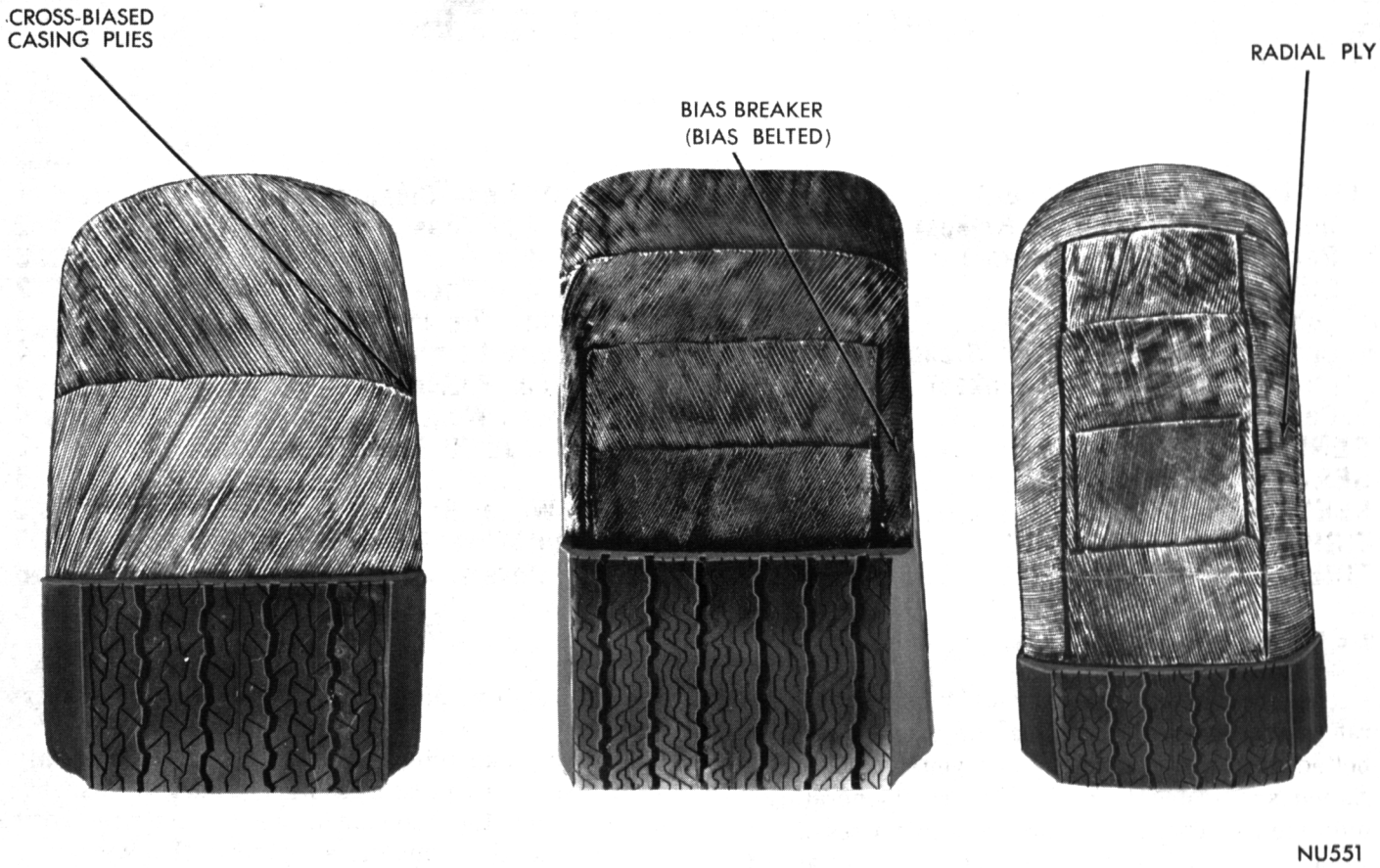

Fig. 1—Tire Cord Angles

may also be removed by steam cleaning. DO NOT USE GASOLINE OR OTHER SOLVENTS. DO NOT USE A WIRE BRUSH.

After the car is in service, ordinary road dirt that collects on white side wall tires may be cleaned with soap or a non-abrasive cleaner and (if necessary) a soft bristle brush. Under no circumstances should gasoline, kerosene, or any cleaning fluid containing a solvent derived from oil be used to clean white sidewall tires. Mineral oil in any form is detrimental to rubber, and a cleaner with an oil base solvent will discolor or injure any tires.

Inflation of Tires

Tire inflation pressure is one of the most important elements of tire care. Inflation pressures recommended for all vehicle models have been carefully selected to provide a proper balance between ride handling, and tire life. See Tire Pressure and Vehicle Load Chart.

Tire pressures should be checked at least once a month and should be checked and adjusted before any long trips. **Check and adjust tire pressures with the tires cold if possible.** It is normal for tire air pressure to increase (2-4 psi) due to temperature increases caused by tire flexing. **Under no circumstances should inflation pressure of warm tires be reduced.**

When it is not possible to check tire air pressure cold, assume a (2-4 psi) increase over cold pressures. **It may be recognized that this method is not as accurate as checking pressures when the tires are cold. Always check tire pressure with an accurate gauge.**

Higher inflation pressures than shown on the chart can cause deterioration in ride quality, less resistance to various types of impact bruises, rapid wear at the center of tire treads and poor steering returnability.

Lower tire pressures than those recommended on the chart can result in greater gasoline consumption, rapid wear toward the edges of tire tread, less resistance to rim bruises and various types of ply and tread separation, cord fatigue or breakage and increased steering effort.

Tire valve caps (or valve extensions) should always be reinstalled on the valve and tightened finger tight. They assist in retaining air and also keep foreign material out of the valve.

Tire Rotation

Under normal operating conditions it is recommended that tires be rotated at every second oil change. This reduces the possibility of tire noise and

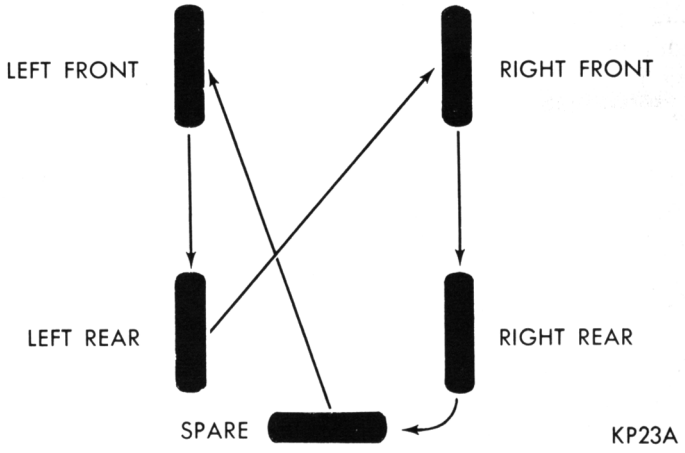

Fig. 2—Tire Rotation Diagram—5 Tires

equalizes tire wear. Figures 2 and 3 are the recommended sequence for the rotation of tires. Under conditions of severe service (trailer towing) they should be rotated more frequently.

Uneven tire wear is frequently the cause of tire induced noises which are attributed to rear axle gears, bearings etc. Unnecessary work is often performed on other chassis components in an effort to correct tire noises.

Radial Ply Tires

Your vehicle is designed for conventional cross bias or bias breaker (bias belted) tires of the sizes indicated. The use of radial tires is not recommended particularly on station wagons. Should these radial tires be desired then tire sizes and road wheel diameters must be selected to maintain ground clearance and load capacity equivalent to the minimum specified tires. **Radial ply tires must be used in sets of five (5), and under no circumstances should they be used on the front only. If snow tires are installed on the rear wheels conventional (cross bias) tires must be mounted on the front wheels. Not doing this will result in oversteer and could possibly cause spins on wet or icy roads. The safest policy is never intermix radial ply tires with conventional (cross bias) tires.**

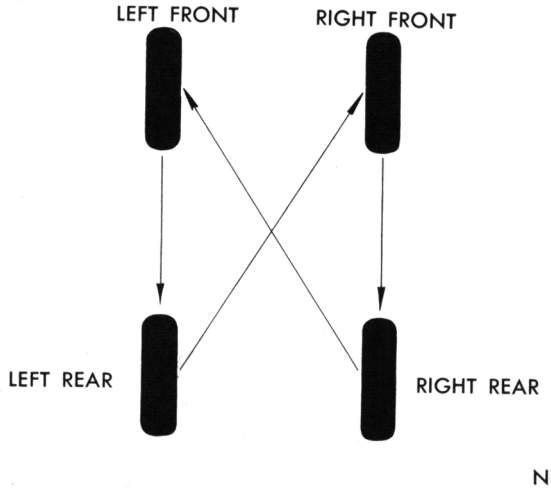

Fig. 3—Tire Rotation Diagram—4 Tires

Wide Tread 70 Series Tires

The use of standard 70 Series wide tread or extra wide tread bias breaker (again radial not recommended) tires is acceptable on your vehicle if the size is listed in the above charts. The use of oversize tires of this construction (that are not listed above) may cause interference with vehicle components under extremes of suspension and steering travel and may cause tire damage. For maximum satisfaction these tires should be used only in sets of five and under no circumstances should they be used on the front only. If snow tires are used they must also be of the same wide tread—low profile 70 Series design.

REPAIRING LEAKS

Leaks between the tire and wheel require the removal of the tire. Leaks in the tire can often be repaired without removing the tire. Always follow the equipment manufacturers recommendations.

Tools used for dismounting and mounting tires must be smooth, free from sharp edges or burrs which could damage the tire or wheel rim.

The tire must be **completely** deflated before the tire beads are removed from the seats. Before mounting the tire on the wheel, make sure all rust scale is removed from the wheel rim. A mild soap solution applied to both tire bead surfaces will aid in installation. Either a commercial type bead expander or a rope tourniquet can be used to seat the tire beads.

When installing wheels on the vehicle, progressively tighten wheel nuts in sequence shown in (Fig. 4) to proper torque specifications, 55 foot-pounds for Valiant, and 65 foot-pounds all other models.

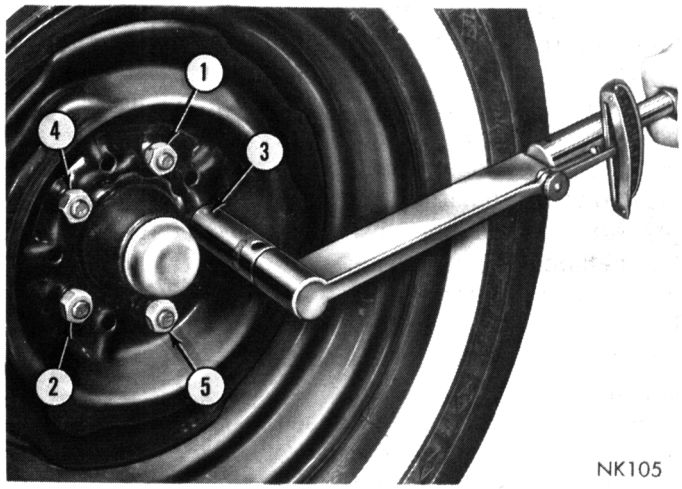

Fig. 4—Wheel Stud Nut Tightening Sequence

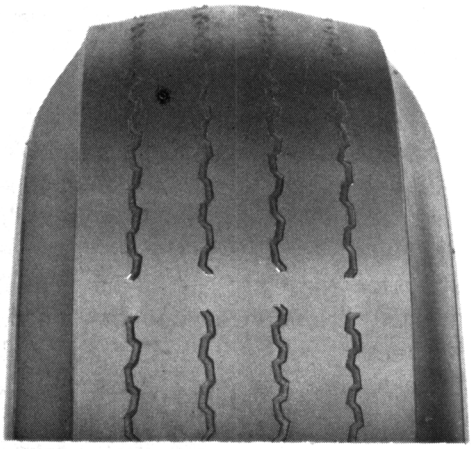
NR243

Fig. 5—Tire Tread Wear Indicator

Tire Tread Wear Indicators

Your potential driving, cornering and braking traction decreases as your tires wear. Furthermore, as the tread depth is decreased the tires have less resistance to road hazards and are more likely to hydroplane on wet pavement. Tread wear indicators have been provided to assist you in determining when your tires are worn so as to require replacement. These indicators are molded into the bottom of the tread grooves and will appear as approximately 1/2 inch wide bands when this tread depth has been reduced to 1/16 inch (Fig. 5). Tire replacement due to tread wear is necessary when these indicators appear in two or more adjacent grooves or a localized worn spot eliminates all the tread.

Tire Noise or Vibration Complaints

To determine whether tires are causing the noise or vibration drive the car over a smooth portion of highway at various speeds and note the effect of acceleration and deceleration on noise level. Axle and exhaust noise change in intensity under these conditions, while tire noise will usually remain constant. If after road testing the vehicle it was determined that tires may be causing the noise, balance all tires very carefully and inflate to 50 psi. Drive the car over the same route at the same speeds as before to determine whether the disturbance has been changed. If the disturbance is changed or eliminated by overinflating the tires, continue the road test by deflating one tire at a time to normal pressure. When the disturbance returns, the last tire deflated will usually be the offender. Tire thump (sometimes referred to as "tramp") usually occurs in the speed range of 20-40 MPH and can usually be located this way. If you have a "thumper", replace the tire.

Tire roughness can be caused by a single tire with two or more "thump" spots in it, or by two or more thumping tires at speeds of 40-70 MPH. To isolate the cause of this condition, you may have to substitute the spare for each of the four tires, with all tires inflated to normal pressure. Tire roughness is recognized as a low-frequency rumble or vibration and is very similar to driveline vibration. Positive separation of the two disturbances can only be accomplished by using a known set of good tires or by towing the vehicle with the propeller shaft removed. To correct tire roughness, replace the offending tires.

Tire Wear Patterns

An inspection of the tires, together with information as to locality of vehicle operation will usually indicate whether abnormal wear is due to operating conditions or to mechanical faults which should be corrected. Various types of abnormal tire wear with their causes and corrective actions are shown in (Fig. 6).

Underinflation

For the maximum results in stability and handling, ride quality and tire life, tire inflation pressures should not be allowed to go below the recommended inflation pressures. When a tire is underinflated, this results in much faster wear of the shoulders than of the center of tread.

Overinflation

When tire inflation pressures are maintained within the specifications the tire will wear evenly over the entire tread. A tire that is overinflated wears much faster in the center of the tread.

Cracked Treads

This is the result of alternate under and over inflation, exceeding the recommended full rated load, high temperature and high speed driving.

Excessive Camber Wear

Excessive wheel camber, either positive or negative causes the tire to run at an angle to the road. One side of the tread wears much more than the other. For best corrective results have the front wheel camber adjusted to specifications.

Toe-in or Toe-out Tread Wear

Excessive toe-in or toe-out causes wear on the edges of the front tires. An excessive amount of either toe-in or toe-out actually drags the tire instead of letting the tire roll true. This wear condition will usually produce a tapered or feathered edge on the outside ribs. Have the toe-in or toe-out adjusted to specifications to correct.

Bald Spot, Cupped or Scalloped Tire Tread Wear

Cupping, scalloping and bald spotting of tires is associated with wear on a car driven mostly at highway speeds without the recommended tire rotation

CONDITION	RAPID WEAR AT SHOULDERS 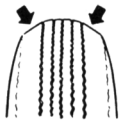	RAPID WEAR AT CENTER 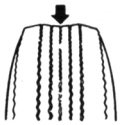	CRACKED TREADS 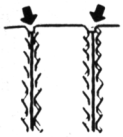	WEAR ON ONE SIDE 	FEATHERED EDGE 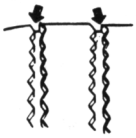	BALD SPOTS 
CAUSE	UNDER INFLATION 	OVER INFLATION 	UNDER-INFLATION OR EXCESSIVE SPEED 	EXCESSIVE CAMBER 	INCORRECT TOE 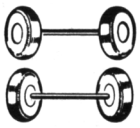	WHEEL UNBALANCED 
CORRECTION	ADJUST PRESSURE TO SPECIFICATIONS WHEN TIRES ARE COOL			ADJUST CAMBER TO SPECIFICATIONS	ADJUST FOR TOE-IN 1/8 INCH	DYNAMIC OR STATIC BALANCE WHEELS

NN2

Fig. 6—Tire Wear Patterns

and with unbalance conditions. Regardless of the cause of cupped wear on either front tire, no alignment or balance job can prevent future excessive wear of the spots. Once a front tire acquires flat or cupped spots additional wear will continue at a rapid rate. To correct this condition, tire rotation and wheel balance are necessary. A cupped tire will partially true itself up on a rear wheel.

WHEELS

All models use steel drop center wheels. The safety rim wheel (Fig. 7) has raised sections between the rim flanges and the rim well. Initial inflation of the tire forces the bead over these raised sections. Tire-wheel separation under extreme hard cornering is prevented by air pressure and these safety humps. Furthermore, in case of a tire failure, the raised sections help hold the tire in position on the wheel until the car can be brought to a safe stop.

TIRE-WHEEL BALANCE

The need for tire and wheel assembly balancing is indicated by heavy vibration of the steering wheel when driving at speeds above 40 miles an hour.

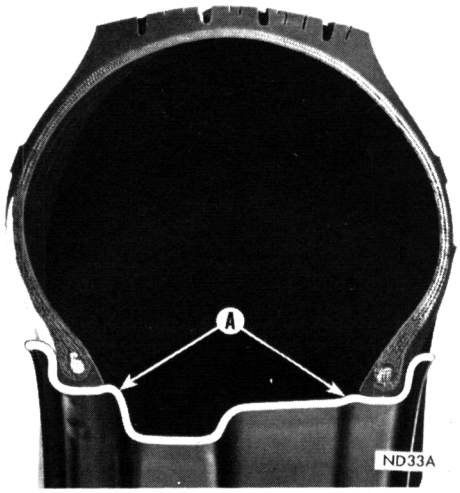

Fig. 7—Safety Type Rim

Static (still) balance is equal distribution of the weight of the wheel and tire around the spindle, so that the assembly has no tendency to rotate by itself. An assembly that has a heavy spot is statically out of balance and can produce a bouncing motion.

A wheel and tire, to be in dynamic balance, must first be in static balance and also be in balance from inside to outside. A wheel not in dynamic balance can produce wobble or shimmy.

Correction for static unbalance is made by first finding the location of the heavy spot, then adding sufficient weight to counterbalance it (follow the equipment manufacturers recommendations.) Half the balance weight should be added to the inside of the wheel and the other half to the outside to prevent excessive dynamic unbalance.

TIRE AND WHEEL RUNOUT

Wheels and tires may be measured for both radial and lateral runout. Radial runout (eccentricity) is the difference between the high and low points on the tread of the tire; lateral runout is the "wobble" of the wheel and/or tire.

Prior to measuring the wheel or tire for runout, the accuracy of the drum at the mounting bolts should be determined. The car should be driven a short distance and immediately lifted off the ground before

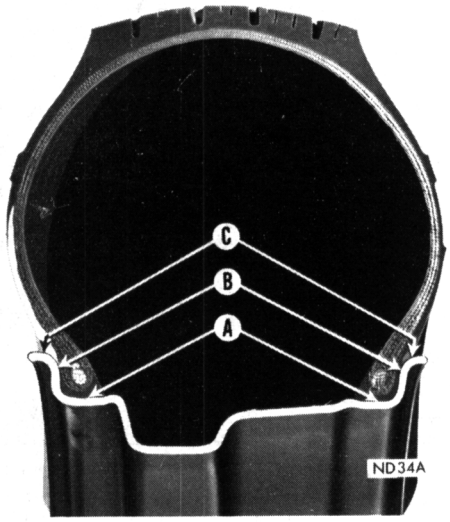

Fig. 8—Runout Checking Area

the measurement is made so that "flat-spotting" of the tire (from being parked) does not affect the runout measurement.

(1) Attach dial indicator C-3339 to a firm base so it will be held steady while taking the runout readings.

(2) Place plunger of dial indicator against one of the center ribs of the tire tread and rotate the assembly slowly to measure radial runout. This measurement should not exceed .080 inch.

(3) To measure lateral runout, position the dial indicator against the side of the tire. This measurement should not exceed .105 inch.

Rotating the tire on the wheel may reduce runout or it may be necessary to take dial indicator measurements of the wheel itself in order to determine which unit has the excessive runout. Measure runout at the protected areas "A" and "B" (Fig. 8), where the tire bead pilots. The radial runout, "A" should not exceed .035 inch. The lateral runout "B", should not exceed .045 inch. **Under no circumstances should point indicated by "C" be used for measuring wheel runout as this metal has been sheared in the manufacturing process and is not an even surface.**

WHEEL COVERS

To avoid damaging the wheel covers during removal and installation, care should be used to be sure the forces are applied to the correct area of the covers. To install the wheel covers, insert the tire valve through the cover valve hole and seat this portion of the cover **completely.** Apply force 180° from the valve hole to complete the installation. When removing the wheel covers, pry completely loose 180° from the valve hole first. Continue prying toward the valve hole until covers are loose. **Do not remove the wheel cover at the valve stem hole.** The covers are structurally stronger at the outer circumference to withstand the force required for removal and installation. Use a rubber end mallet when installing the covers.

BEARINGS

FRONT WHEEL BEARING LUBRICATION

Front wheel bearing lubricant should be changed at the recommended intervals or at the time of normal brake reline. Lubricant should not be added to that already in the bearings.

Removal (without Disc Brakes)

(1) Raise vehicle so front wheels are free of the floor.

(2) Remove wheel cover, grease cap, cotter pin, nut lock and bearing adjusting nut.

(3) Remove thrust washer and outer bearing cone.

(4) Slide wheel, hub and drum assembly off the spindle.

(5) Drive out inner oil seal and remove bearing cone.

Removal (with Disc Brakes)

(1) Raise vehicle so front wheels are free of floor.

(2) Remove wheel cover and loosen and remove wheel nuts and remove wheel and tire assembly.

(3) Remove grease cap, cotter pin, nut lock and bearing adjusting nut.

(4) Remove bolts that attach disc brake caliper assembly to steering knuckle.

(5) Slowly slide caliper assembly up and away from brake disc and support caliper assembly on steering knuckle arm. **CAUTION: Do not leave caliper assembly hang by brake hose, as possible brake hose damage may result.**

(6) Remove thrust washer and outer bearing cone.

(7) Slide wheel hub and disc assembly off the spindle.

(8) Drive out inner seal and remove bearing cone.

Cleaning and Inspection

(1) Clean the hub and drum assembly and the bearings in kerosene, mineral spirits or other similar cleaning fluids. **Do not dry the bearings by air spinning.**

(2) Examine bearing cups for pitting, brinnel marks or other imperfections. If cups are damaged, remove them from the hub with a soft steel drift positioned in the slots in the hub.

(3) Bearing cup areas in the hub should be smooth without scored or raised metal which could keep the cups from seating against shoulders in hub.

(4) The bearing cones and rollers should have smooth, unbroken surfaces without brinnel marks.

The ends of the rollers and both cone flanges should also be smooth and free from chipping or other damage.

Installation (without Disc Brakes)

(1) If the bearing cups were removed, start the new cups into hub evenly, driving them flush with hub using a soft steel block and hammer. Seat cups against shoulders of hub, using a soft steel drift and hammer.

(2) Fill hub grease cavity (Fig. 9) with recommended wheel bearing lubricant. Lubricant should be even with inner diameter of bearing cups.

(3) Force lubricant between bearing cone rollers or repack using a suitable bearing packer.

(4) Install inner cone and a new seal, with lip of seal facing inward. Using Tool C-3893, position seal flush with end of hub. The seal flange may be damaged if tool is not used.

(5) Clean the spindle and apply a light coating of wheel bearing lubricant over the polished surfaces.

(6) Install wheel tire and drum assembly on spindle.

(7) Install outer bearing cone, thrust washer and adjusting nut.

Installation (with Disc Brakes)

(1) If bearing cups were removed, start new cup into hub evenly, driving them flush with hub using a soft steel block and hammer. Seat cups against shoulders of hub, using a soft steel drift and hammer.

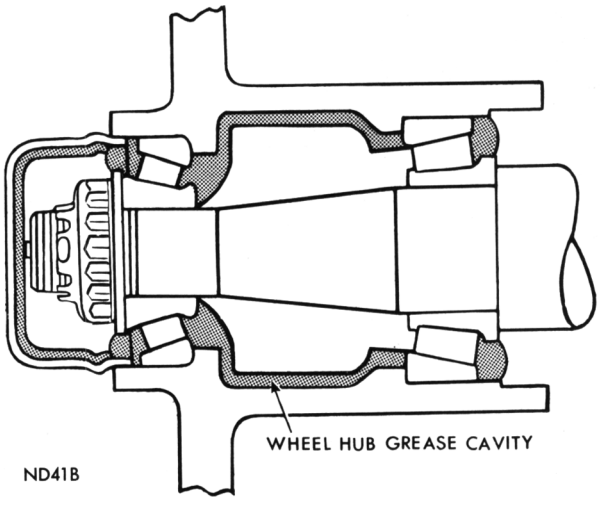

Fig. 9—Wheel Hub Grease Cavity

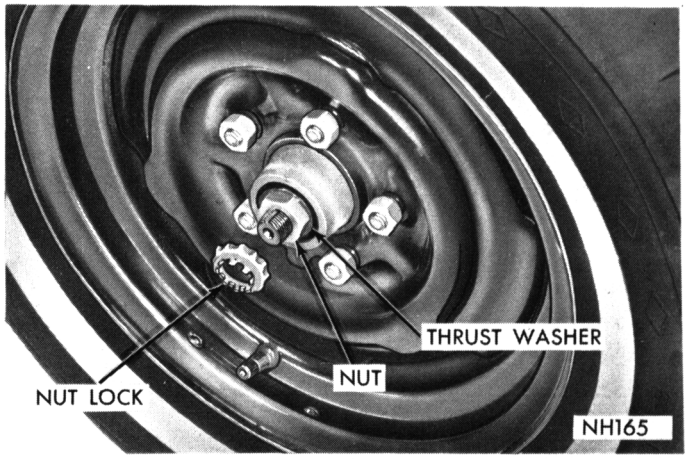

Fig. 10—Front Wheel Bearing Adjustment

(2) Fill hub grease cavity (Fig. 9) with recommended bearing lubricant, see Lubrication Group 0. Lubricant should be even with inner diameter of bearing cups.

(3) Force lubricant between bearing cone rollers or repack using a suitable bearing packer.

(4) Install inner cone and a new seal with lip of seal facing inward. Using Tool C-3893, position seal flush with end of hub. The seal flange may be damaged if tool is not used.

(5) Clean the spindle and apply a light coating of wheel bearing lubricant over the polished surfaces.

(6) Install hub and braking disc assembly on spindle and install outer bearing cone, thrust washer and adjusting nut.

(7) Slowly slide caliper assembly down on brake disc assembly and position correctly.

(8) Install caliper assembly over disc and align mounting holes. Install mounting bolts and tighten to 45 to 60 foot-pounds.

(9) Install tire and wheel and tighten wheel nut to specifications.

Adjustment

(1) Tighten wheel bearing adjusting nut to 90 inch-pounds while rotating wheel.

(2) Position nut lock (Fig. 10) on nut with one pair of slots in line with cotter pin hole.

(3) Back off adjusting nut lock assembly one slot and install cotter pin. **The resulting adjustment should be zero (no preload) to .003 inch end play.**

(4) Clean the grease cap, coat inside with wheel bearing lubricant (do not fill) and install.

(5) Install wheel covers and lower vehicle to floor.

SPECIFICATIONS

The factory installed original equipment tires are superior tires for your vehicle. They provide the best overall performance for normal operation, furthermore, the ride and handling characteristics of these tires match your vehicle requirements. With proper care they will give you excellent reliability, traction, skid resistance and tread life.

Your vehicle is designed for conventional cross bias or bias breaker (bias belted) tires of the sizes indicated in the Minimum Tire Size Chart. The use of radial tires is not recommended, particlarly on station wagon models. Should these radial tires be desired, then tire sizes and road wheel diameters must be selected to maintain ground clearance and load capacity equivalent to the minimum specified tire. **Radial cord tires should always be used in sets of five and under no circumstances should they be used on the front only.**

EQUIPMENT QUALIFICATIONS	Minimum Tire Size — Valiant			
	Sedans Vehicle Maximum Capacity 1100 Lbs.			
	Engine Displacement (Cubic Inches)			
	170	225	273	318
Standard	6.50-13	6.50-13	7.00-13	7.00-13
Air Conditioned	—	7.00-13	7.00-13	7.00-13
Disc Brakes	6.95-14	6.95-14	6.95-14	6.95-14
Disc Brakes and Air Conditioning	—	6.95-14	D70-14	D70-14
Trailer Towing	—	D70-14	D70-14	D70-14

Maximum Tire Size (Do Not Exceed)	
Wheel Rim Diameter and Width	Tire Size (Maximum)
13 x 4-1/2J	7.00-13
14 x 4-1/2J	6.95-14, C78-14
14 x 5-1/2J	E70-14 (Do Not Use 7.35-14
	or E78-14).

Equipment Qualifications	Minimum Tire Size—Barracuda			
	Sedans—Fastback—Convertible Vehicle Maximum Capacity 1100 Lbs.			
	Engine Displacement (Cubic-Inch)			
	225	318	340	383
Standard Hardtop and Fastback	6.95-14	6.95-14	D70-14	E70-14
Air Conditioned	6.95-14	D70-14	E70-14	—
Convertible	6.95-14	D70-14	D70-14	E70-14
Air Conditioned	D70-14	D70-14	E70-14	—
Trailer Towing	D70-14	D70-14	E70-14	—

Maximum Tire Size (Do Not Exceed)	
Wheel Rim Diameter and Width	Tire Size (Maximum)
14 x 4-1/2J	6.95-14, C78-14
14 x 5-1/2J	E70-14 (Do Not Use 7.35-14 or E78-14).

Equipment Qualifications	Minimum Tire Size—Satellite							
	Sedans—Hard Top—Convertible Vehicle Maximum Capacity 1100 Lbs.					Station Wagon Vehicle Maximum Capacity 1200 Lbs.		
	Engine Displacement (Cubic-Inch)					Engine Displacement (Cubic-Inch)		
	225	318	383**	426 Hemi	440	225	318	383
Standard	7.35-14	7.35-14	7.75-14	F70-15	F70-14	8.25-14	8.25-14	8.25-14
Air Conditioned	7.35-14	7.75-14*	7.75-14	—	F70-14†	8.25-14	8.25-14	8.25-14
Trailer Towing	—	7.75-14	7.75-14	—	F70-14	—	8.55-14	8.55-14

Maximum Tire Size (Do Not Exceed)	
Wheel Rim Diameter and Application	**Tire Size (Maximum)**
14" Wheel on 6 Cylinder Sedan	7.75-14, E78-14
15" Wheel on 6 Cylinder Sedan	7.75-15, E78-15
14" Wheel on 8 Cylinder Sedan	8.25-14, G78-14, F70-14
15" Wheel on 8 Cylinder Sedan	8.25-15, G78-15, F70-15
14" Wheel on Station Wagon	8.55-14, H78-14
15" Wheel on Station Wagon	8.25-15, G78-15

*7.35-14 Tire is standard on Sedans and Hardtops with Air Conditioning.
†26 psi @ 5 passengers or less required on this model.
**Road Runner models use F70-14 tires.

Equipment Qualifications	Minimum Tire Size (Fury)							
	Sedan—Hardtop—Convertible Vehicle Maximum Capacity 1100 Lbs.				Station Wagon Vehicle Maximum Capacity 1200 Lbs.			
	Engine Displacement (Cubic Inches)				Engine Displacement (Cubic Inches)			
	225	318	383	440	225	318	383	440
Standard	7.75-15	7.75-15*	8.25-15	8.25-15	8.55-15	8.85-15**	8.85-15	8.85-15
Air Conditioned	7.75-15	8.25-15	8.25-15†	8.25-15†	8.55-15	8.85-15**	8.85-15	8.85-15
Dual Air Conditioned	—	—	—	—	8.55-15	8.85-15	9.15-15	9.15-15
Trailer Towing	—	8.55-15	8.55-15	8.55-15	—	9.15-15	9.15-15	9.15-15

Maximum Tire Size (Do Not Exceed)	
Wheel Rim Diameter and Width	**Tire Size (Maximum)**
15 x 5J	8.25-15, G78-15
15 x 5-1/4 JJ	8.55-15, H78-15, G70-15
15 x 6 JJ (Sedans Only)	8.55-15, H78-15, G70-15
15 x 6 JJ (Station Wagon)	9.15-15, J78-15
15 x 6-1/2 JJ (Station Wagon where 9.15-15 is minimum tire size).	9.15-15
15 x 6-1/2 JJ (Station Wagon where 9.15-15 is optional tire size).	9.15-15, J78-15
15 x 6-1/2 JJ (Station Wagon Trailer Towing)	9.15-15

*VIP Models with 318 C.I. Engine Use 8.25-15.
**Fury I and II 2 Seat Station Wagon use 8.55-15 tires.
†26 PSI @ 5 passengers or less required on these models.

Your vehicle, when equipped with the minimum specified tire size shown in the Minimum Tire Size Chart and inflated to the corresponding maximum vehicle capacity pressure listed in Tire Pressure Chart, is designed to operate at any load up to and including the maximum vehicle capacity at all normal highway speeds (up to 75 mph). Owners who prefer a softer ride may use the optional reduced inflation pressure if the load carried is five passengers or less (750 pounds maximum) and the vehicle speed does not exceed 75 mph.

TIRE PRESSURE CHART

MINIMUM TIRE SIZE SPECIFIED FOR VEHICLE	Vehicle Load Capacities and Corresponding (Cold) Tire Inflation Pressures							
	For All Load Conditions Up To And Including Vehicle Maximum Capacity				Optional Reduced Vehicle Loading of Five Passengers or Less For Improved Ride			
	Front Seat	Rear Seat	Luggage Compartment Or 3rd Seat	Total	Front Seat	Rear Seat	Luggage Compartment Or 3rd Seat	Total
	3 Passengers Maximum	3 Passengers Maximum	200 Lbs. Maximum*	1100 Lbs. Maximum**	2 Passengers Maximum	3 Passengers Maximum	0	750 Lbs.
	Front		Rear		Front		Rear	
6.50-13	32		32		26		26	
6.95-14	32		32		26		26	
7.00-13	28		28		26		26	
7.35-14	32		32		24		24	
7.75-14	26		26		24		24	
7.75-14 Trailer Towing	32		32		—		—	
8.25-14 Station Wagon	22		32		—		—	
8.55-14 Station Wagon Trailer Towing	22		32		—		—	
D70-14	30		30		26		26	
D70-14 Trailer Towing	32		32		—		—	
E70-14	28		28		26		26	
E70-14 Trailer Towing	32		32		—		—	
F-70-14	28		28		24		24	
F-70-14 Air Conditioning	28		28		26		26	
F-70-14 Trailer Towing	32		32		—		—	
F-70-15	28		28		26		26	
7.75-15	30		30		24		24	
8.25-15	30		30		24		24	
8.25-15 Air Conditioning 383 or 440 Eng.	30		30		26		26	
8.55-15 Station Wagon	22		32		—		—	
8.55-15 Sedan-Hardtop Convertible Trailer Towing	32		32		—		—	

8.85-15 Station Wagon	22	32	—	—
9.15-15 Station Wagon	22	32	—	—
9.15-15 Station Wagon Trailer Towing	22	32	—	—

*Station Wagon Luggage space or 3rd seat 300 lbs. maximum

**Station Wagon 1200 lbs. maximum.

1. Cold inflation pressures must not exceed 32 pounds per square inch (PSI) for 4 ply rating (load range B) and 40 psi for 8 ply rating (load range D) tires. These tire pressures may increase as much as 6 psi when hot. Do not reduce this normal pressure buildup. Cold tire inflation is defined as the pressure after the vehicle has been inoperative for at least three hours and driven less than one mile.
2. All tires must be inflated 4 psi more than specified in the chart but not to exceed pressures indicated above in note No. 1 for sustained speeds above 75 mph. Sustained speeds above 75 mph are not recommended when the 4 psi pressure adjustment would require pressures greater than the allowed maximum indicated on the tire sidewall.

Eight ply rating (load range D) tires inflated an additional 6 psi, but not to exceed 40 psi, are required for these instances where maximum vehicle capacity is carried above 75 mph and maximum allowable 4 ply rating (load range B) tire pressures would be exceeded.

We strongly discourage excessive speed, however, if the vehicle must be driven at sustained speeds over 90 MPH special high speed tires inflated to maximum vehicle capacity pressures are required.

3. The use of tires smaller than the specified minimum or larger than the specified maximum could constitute a safety hazard.
4. Cargo loads, particularly in station wagon models, should be distributed as far forward as possible.
5. Vehicles with luggage racks do not have a maximum vehicle capacity greater than indicated in chart.
6. Vehicles with trailer towing packages do not have increased maximum capacity. The allowable passenger and cargo load must be decreased an amount equal to the trailer tongue load on the trailer hitch.
7. Because of vehicle limitations, oversize, bias, breaker or eight ply rating (load range D) tires do not provide increased vehicle capacity. They do, however, provide an extra margin of tire service (tread life, etc.). Do not exceed the maximum tire size stated in chart.
8. Snow tires should not be operated at sustained speeds over 70 mph. These tires should be operated at maximum vehicle capacity pressures under all load conditions.
9. All tires and especially the wide tread 70 Series, bias breaker and radial types must be rotated no later than every second oil change and should be in correct balance to obtain the most uniform tread wear. Tire rotation at shorter intervals is recommended if irregular tread wear develops.

	Valiant Barracuda	Satellite**	Fury**
WHEELS			
Type		Steel Disc	
Rim		Drop Center—Safety Wheel	
Size—Standard (Drum Brakes)	13 x 4-1/2J*	14 x 5J	15 x 5J***
—Station Wagon	—	14 x 5-1/2JK	15 x 6JJ****
—Disc Brakes	14 x 4-1/2J*	14 x 5J	15 x 5J***
—Station Wagon (Disc Brakes)	—	14 x 5-1/2JK	15 x 6JJ****
No. of Wheel Nuts	5	5	5
Stud Size	7/16″-20	1/2″-20	1/2″-20
Stud Hole Circle	4″	4-1/2″	4-1/2″
Wheel Nut Torque	55 ft-lbs.	65 ft-lbs.	65 ft-lbs.
Bearing Nut Torque (Wheel Spinning)	70 in-lbs.	90 in-lbs.	90 in-lbs.
TIRES			
Type		Tubeless	
Size		(See Minimum Tire Size Chart in this Section)	

* 14 x 5-1/2J wheel is used with E70-14 and D70-14 Tires.
** 14 x 5-1/2JK wheel is used with F70-14 or 15 x 6JK with F70-15 tires.
*** 15 x 5-1/2JJ wheel is used with 8.25-15 or 8.55-15 tires. 15 x 6JJ is used with G70-15 tires.
**** 15 x 6-1/2JJ wheel is used with 9.15-15 tire.
(For Vehicle Load and Recommended Tire Pressures, see Chart in this Section.)

TIGHTENING REFERENCE

	Pounds Foot	Inch
Wheel Bearing Nut (with Wheel Spinning		
Valiant—Barracuda		70
Satellite—Fury		90
Wheel Stud Nut		
Valiant—Barracuda	55	
Satellite—Fury	65	

BODY AND FRAME

CONTENTS

	Page
BODY AND FRAME ALIGNMENT	144
CONVERTIBLE	122
INTERIOR TRIM AND SEATS	98
MAINTENANCE AND CARE	1
REFINISHING PROCEDURES	148
SEALING	130
SHEET METAL-DOORS-COWL PANELS	5-28-56
WINDSHIELD AND REAR WINDOW	118
WOOD GRAIN OVERLAY	142
VINYL ROOF COVERING	140

GENERAL INFORMATION

"Unibody" Construction

A "Unibody" type construction is one in which the body shell and the underbody (frame) are welded together into one unit.

Additional rigidity and overall strength of the body-shell is accomplished with heavy-duty crossmembers welded under the rear seat area and to the box side rails at the extreme rear end of the body.

Heavy duty roof bows provide greater strength to the roof panel. The front door hinge pillar is one continuous piece from the roof rail to the body sill. Overlapping sheet metal seams improve sealing. Metal cages welded to the outside of the cowl side panels incorporate nuts for attaching fenders and hood hinge supports. Inner hinge reinforcements assure proper door alignment and adjustment.

The radiator support, fender wheelhousings and cowl panels add structural strength to the fore-structure and body assembly.

An integral fore-structure assembly, extends forward of the front passenger compartment and is bolted to the "Unibody".

MAINTENANCE AND CARE

INDEX

	Page
APPEARANCE	
ACRYLIC FINISHES—POLISHING	4
BRIGHT METALS—POLISHING	4
CONVERTIBLE	
Backlight	2
Boot	2
Top	1
Well	2
GLASS	5
INTERIOR TRIM	
Cargo Area (Station Wagon)	4
Carpets and Rubber Mats	4
Color Restoration or Change	4
Door Panels	3
General Instructions	2
Glove Compartment	4
Headliners	3
Luggage Compartment	4
Package Shelfs	4
Sealers—Leather and Vinyl	4
Seats	3
Bodycloth—Knit Type	2
Spots and Stains	2
Side Cowl Trim Panels	4
Test for Material Type	2
POLISHING	
Acrylic Finishes	4
Bright Metals	4
Scratches and Overspray	4
TIRES	4
VINYL ROOF COVERING	2
DRAIN HOLES	5
LUBRICATION	5

GENERAL INFORMATION

The procedures for maintaining "new car" appearance of material covered in the APPEARANCE section are those most generally used. The final results may vary due to application of agents by persons inexperienced at this work and also from the type of foreign element on the material. **For satisfactory results, appearance maintenance should be performed by qualified experienced personnel using the recommended agents and established service procedures.**

APPEARANCE

CONVERTIBLE

Never lower a wet top. Dampness may cause formation of mildew, and damage to the fabric will result.

Top—Frequent brushing and vacuuming will keep the top free of abrasive dust and dirt. When washing, the top material should be thoroughly wet.

For scrubbing, use only a soft, natural bristle hand

scrub brush. Use warm water and naphtha bar type soap as the cleaning agent. Do not wash in direct sunlight. Scrub with soap suds, starting in the center and gradually working toward the edges. Rinse thoroughly with clean water to remove all traces of soap. Allow to dry completely before lowering.

Backlight—The backlight (rear window) is a solid tempered glass.

Top Boot and Well—Remove all abrasive dust and dirt from boot and well by brushing or vacuuming. For scrubbing, use only a soft, natural bristle hand scrub brush. Use warm water and naphtha type bar soap. Rinse thoroughly with clean water. Use a soft absorbent cloth to dry.

VINYL ROOF COVERING

In a well ventilated area, saturate a clean cloth with the service recommended type Vinyl Roof Cover Cleaner and Conditioner. Wipe onto surface using a circular motion. With another clean cloth, wipe off excess material from top. Allow to dry for ten minutes.

INTERIOR TRIM

Most stains can be removed while they are fresh and have not hardened and set into the fabric. An exception is mud or clay, which should be allowed to dry so that most of it can be brushed off. It is helpful, to know the nature of the staining matter so the correct cleaning agent may be used.

General Instructions: Use a very small piece of clean cotton cheesecloth approximately 3″ x 3″. Squeeze most of the liquid from the fabric and it is less likely to leave a ring. Wipe the soiled fabric very lightly with a lifting motion. Always work from the outside toward the center of the spot. Turn the cheesecloth over as soon as one side becomes stained to prevent working the stain matter back into the cleaned portion. Use clean cheesecloth as soon as both sides become stained.

Testing For Type of Material—Natural cloth will burn like string, slow and smoky. Synthetic material such as nylon, burns fast and "balls up" into a hard mass. Sample material for testing can be found under the seat cushion, sun visor and dome light brackets, or back of the trim panels. Another method of testing is to rub the back of a fingernail over the surface of the material. Synthetic materials appear to "whistle" when this is done.

Body Cloth—Knit Type Insert—Spot Cleaning—(Grease, oil, adhesive, crayon, lipstick, similar stains and any stains of undetermined origin). Wipe off as much of the staining material as possible with clean cheesecloth. Using K2R aerosol spotlifter, or equivalent, spray stained area from a distance of 8 to 10 inches. Allow to dry completely, (a white powder will form). Brush or vacuum powder from surface. Repeat operation should any stain remain.

Entire Insert—Cleaning Only—(Waterspots, dirt, foodstains, coffee and other water borne stains). Vacuum or brush off as much of the staining material as possible. Shield adjacent cushion or back (not to be cleaned) to prevent wetting. Use a wiping motion outward from the contaminated area to the edges of the insert with clean lukewarm water and clean cheesecloth. Rub with water until entire insert is wet. **Do not soak insert.** If clear water did not remove soil, use cleaner D-5, or equivalent, diluted one part cleaner to one part water and again clean entire insert.

Entire Insert or Pipe—Cleaning Only—(Grease, oil, adhesive, crayon, lipstick and similar stains). Wipe off as much of staining material with clean cotton cheesecloth. Wet another piece of clean cheesecloth with the recommended spot remover and fabric cleaner, or equivalent and squeeze out excess cleaner until cheesecloth is drip free. Use a wiping motion outward from the stained area to the edges of the pipe or bisquit and clean complete area. Unfold cheesecloth to expose clean areas frequently so staining material being removed is not re-deposited on fabric. Continue until foreign matter is no longer visible and entire fabric cover or individual pipe or bisquit is dampened. In cases of severe staining, a second cleaning may be required. Be sure to use the minimum amount of solvent required to clean affected area. **Excessive solvent may damage the foam underpadding.**

Oil and Water Repellent Application—The cleaned area must be completely dried before applying repellent. **Perform following operation only in a well ventilated area. Avoid prolonged breathing of vapors or contact with eyes.** Using Scotchgard Fabric Protector, or equivalent, hold spray can 6 to 8 inches from fabric and with slow back and forth sweeping motions, spray fabric until evenly wet. **Be sure to overlap spray patterns.** Repeat spraying operation with a spray pattern perpendicular (at 90 degrees) to the first application. Allow to dry for a minimum of one hour before fabric is sat on.

Spots and Stains—When using water to remove a spot, be sure to wash entire section after spot has been removed to avoid water stains. Before cleaning seats, door panels, headliner, etc., remove as many spots as possible.

Use a putty knife to break up and remove encrusted foreign matter. Vacuum thoroughly.

Apply the recommended spot removing agent with a clean cloth or sponge. Work in a wide circle to prevent making a ring and work toward center.

Surface Spots—Brush out with a small hand brush, using care not to damage fabric when brushing.

Deep Penetrating Spots—Apply the spot removing agent by brushing. When spot is thoroughly worked

and saturated, use high air pressure to blow dirt down through material. Occasionally the entire spot may not be removed and it will then be necessary to cover the area with a light application of dye.

Water Stains—Water stains in **fabric materials** can be removed with a cleaning solution made from one cup of ordinary table salt and one quart of water. Vigorously scrub solution into stain and rinse with clean water. Water stains in **nylon and other synthetics** should be removed with a commercial type spot remover compounded for the specific material being cleaned.

Mildew—Clean area around mildew with warm suds. Rinse with cold water, soak mildew area with solution of one part common table salt and two parts water, then wash with the recommended upholstery cleaner.

Rust Stains—Keep rust remover solution away from your skin. Wash hands immediately if exposed. Clean extra well under fingernails. Read instructions on the bottle before using. Wrap a small strip of cloth around each button to avoid leaving a ring on upholstery material.

Dampen the stained area with water. Apply a commercial rust remover solution. Sponge with clean water to clean rust from upholstery buttons. Moisten buttons with a few drops of water applied with a small piece of sponge or cloth. Apply one or more drops of rust remover. Fast dry clean areas with heat lamps.

Chewing Gum and Tar—Avoid using spotting or cleaning solution that will dissolve or soften gum or tar. Place a cube of ice on gum or tar to harden it. Remove as much as possible with a dull knife when it is in this hardened state. Moisten remainder with cleaning fluid and scrub clean. In some cases soak with cleaning fluid and blow the stain through using high air pressure.

Ice Cream and Candy—Use a putty knife to remove as much substance as possible. Use care not to damage fibers of upholstery. Most candy has a sugar base and can be removed by rubbing area with a cloth wrung out in warm water. An **oily type of candy,** after using warm water, should be cleaned with an upholstery type cleaner that will emulsify with the oil. Rinse with water and remove remaining stains with cleaning fluid.

Bloodstains—Never use warm or hot water. Use a clean cloth wrung out in cold water and rub the stain. If stain is not completely removed, use spot remover or vinyl cleaner and apply with a brush.

Wine or Alcohol—Avoid use of soap. Scrub stain with a cloth moistened in luke warm water. Remove remaining stains with a regular cleaning solution.

Shoe Polish—Scrub area with a cloth saturated with cold water. Remove wax base polishes by sponging with spot remover.

Grease, Oil, Lipstick and Related Stains—Use spot remover to avoid leaving a ring. Cleaning from outside of spot and work toward center. When spot has been removed, dry fabric with a clean cloth.

Urine—Use clean cloths for each operation. Saturate cloth with lukewarm soap suds (mild neutral soap) and sponge stain. Using cold water and a cloth, rinse area thoroughly. With a solution of one part household ammonia and five parts water, saturate a cloth and apply to stain for one minute. Rinse with a wet cloth.

Nausea—Use clean cloths for each operation. Sponge area with a cloth dipped in cold water. Wash lightly with lukewarm water and soap (mild neutral). Dip a cloth in cold water and rub affected area. If any stain remains, clean with a cloth moistened with a volatile cleaner.

Headliners—Cloth Type—Mix a solution of water and a foaming type upholstery cleaner (as shown on the container) to produce thick suds. Use **only** foam when cleaning, as saturation with liquids may result in streaks, spots or shrinking.

On nap type, lay down nap, usually left to right. Do not stop, when washing a headliner. Complete the entire operation at one time using the same cleaning solution.

Starting in a rear corner, clean only one or two sections at a time. Thoroughly work suds into cloth with a natural sponge. Use circular or short back and forth strokes to remove all dirt. When the sponge glides easily, leaving an even distribution of foam and headliner appears clean, finish cleaning with sweeping motions in one direction.

Hard Board Type—Apply a solution of upholstery cleaner and water with a sponge. Use circular or short back and forth stroke and wipe with a dry clean cloth. If headliner is extremely dirty, wash with vinyl cleaner using the same procedure.

Vinyl Type—Apply vinyl cleaner with a sponge (or if extremely dirty scrub with a brush) wipe clean with a dry clean cloth.

Seats and Door Panels—Mix one pint upholstery cleaner to one gallon of water. If extremely dirty, add more cleaner to solution.

Do not soak around buttons. Scrub thoroughly with a brush or sponge. **Avoid over soaking the material,** do one section at a time only. Frequently stains will be evident when material is damp but will disappear when dry. Use care not to damage fabric by attempting to brush out "stubborn" spots. Spots should be removed before washing. After part has been scrubbed, remove loosened dirt by rubbing area briskly with a clean cotton towel or soft rag. Make final strokes on one direction.

Nylon or Synthetic Fabrics—For average conditions use methods and materials used in washing cloth up-

holstery. When material is extremely dirty, use multi-purpose cleaner full strength and a stiff scrub brush. Scrub thoroughly in all directions. Wipe off dirt and excess cleaner with a clean cotton towel or soft rags.

Leather, Leatherette or Vinyl Fabric—Use multi-purpose cleaner full strength and a stiff scrub brush. Apply to surface and let set for two (2) minutes then scrub thoroughly. Clean between all seams and in all cracks and underneath beading. Wipe off dirt and excess material with a clean cotton towel or soft rag.

Package Shelf-Hard Board Type—Clean using a solution of upholstery cleaner. **Avoid water logging the backing, dry immediately.**

Vinyl Type—Clean using multi-purpose cleaner. Dry with clean toweling or rags.

Side Cowl Trim Panels—Leather—Vinyl—Metal Types—Use multi-purpose cleaner full strength. Use a stiff brush and apply to surface, let set (2) two minutes then scrub thoroughly. Clean seams, cracks and beneath beading. Dry with a clean soft towel or rag.

Glove Compartment—Some glove compartments are made of a cardboard type material. Do not waterlog. Vacuum thoroughly. Clean with upholstery cleaner or vinyl cleaner.

Rubber Mat—Vacuum thoroughly and clean with upholstery cleaner or multi-purpose cleaner. Use toweling or rags to remove dirt and excess cleaner.

Carpeting—Thoroughly vacuum. Mix one pint of upholstery cleaner to one gallon of water. If carpet is faded, discolored or spotted, add upholstery tint to this solution. To determine the right color shade, add tint in small quantities only. Test by dipping a white rag into solution, wring out and inspect shade. **The dye will dry a shade or two darker.** With a stiff brush apply solution and scrub carpet vigorously. Lay nap down in one direction. When dry, fluff carpets by rubbing with a dry brush.

Salt Stains—Vacuum carpet thoroughly. Use a solution made from water and a heavy concentration of ordinary table salt. Soak the stained area to loosen embedded salt (use a wire brush, if necessary). Wash entire carpet with the recommended cleaner. Additional washing may be necessary for satisfactory results.

Luggage Compartment—Remove all items from compartment. Use a steel brush to loosen rust and caked dirt and vacuum thoroughly. Wash with upholstery cleaner or multi-purpose cleaner and dry with clean toweling or rags.

Cargo-Area (Station Wagon)—Follow same procedure used for Luggage Compartment.

Color Restoration or Change—Tints and dyes should be applied by reliable experienced personnel. Dyes or tints can be applied when stains persist, after cleaning, or a change in color is desired. **The instructions for mixing and applying the color must be followed precisely.** Use only those recommended for the exact material being worked on.

Leather and Vinyl Sealers—To repair holes cut material about 1/2 inch larger than area being repaired. Position patch under hole and apply sealer to contacting areas. Apply masking tape over tear to hold edges in place until sealer dries. After sealer has dried, remove tape and trim all rough edges. Fill visible cracks with sealer. **Use a step application procedure in filling deep cracks.** After sealer has thoroughly dried, sand lightly with #400 grade sandpaper until smooth. Apply color to repaired area.

POLISHING—Acrylic Finishes—Polish at least twice a year to remove all foreign film. When polishing use one pad, made from cheesecloth or an old "turkish" towel, to apply polish and another to remove dried film. Test area by rubbing fingers over polished surface. If not thoroughly cleaned, smears of polish will show.

Sand Scratches—Overspray—Foreign Material—Minor conditions can be removed using the following procedure:

(1) Using oleum spirits, mineral spirits or kerosene hand sand affected surface with No. 600 paper.

(2) Remove all sanding sludge.

(3) Machine polish the sanded surface using rubbing compound until the surface is completely free of scratch marks. Blend with adjacent areas.

(4) Buff surface with a clean lambs wool pad using a liquid type final polish. If the appearance of the polished area is noticeably different than adjacent areas, completely buff the adjacent panels. If necessary, polish complete side or horizontal surfaces to assure uniform appearance.

(5) Use a clean, soft, cotton cloth, **do not use cheesecloth,** to hand clean all inaccessible areas.

(6) Remove all polish or rubbing compound from mouldings, medallions, name plates or any other exterior ornamentation.

Bright Metals—When cleaning anodized aluminum, use care not to rub through the anodized coating. All bright metal should be thoroughly cleaned at least twice a year.

The product manufacturer recommendations should always be followed. Clean metal thoroughly, removing all traces of cleaner from corners. Apply and rub out a coat of good body wax. During winter months and in areas in which salt is used, do not rub out wax.

Frequent washing of bright metals by steam necessitate more frequent applications of wax.

TIRES

Do not clean tires with scouring powder, steel wool or other abrasive type cleaners. Clean white sidewall tires with a stiff bristle brush and white sidewall cleaner, or multi-purpose cleaner and rinse with clean

water. Scuff marks can be dressed down by sanding lightly with #400 sandpaper.

GLASS

Do not use putty knives, razor blades, steel wool, or other metal objects to remove deposits from glass.

Interior glass surfaces, including convertible backlight, should be thoroughly cleaned weekly to remove all traces of smoke and other films.

Exterior glass surfaces, including convertible backlight, are best cleaned with the use of a commercially made cleaner. **Do not** scrape off smears from bugs, road tars or other similar objects, use warm water or the recommended solvents to remove.

During the winter months, snow, ice and frost can be removed with a plastic or rubber type scraper, or with a commercially made solvent. **Do not use metal objects to remove deposits from glass.**

DRAIN HOLES

The drain holes, in the bottom of cowl plenum chamber, doors and floor sills (rocker panels) should be inspected regularly to insure unobstructed drainage. Remove road tars, mud and other foreign matter immediately. Should bare metal be exposed, surface treat metal and refinish.

The drain holes in the quarter panel well areas are sealed with a removable plastic plug. The plugs should only be removed whenever it is necessary to clean or drain fluids from the well area.

LUBRICATION

To maintain ease of operation, the hood, door, deck lid and tail gate hinges should be lubricated with the recommended lubricants at the recommended intervals. Refer to the Lubrication and Maintenance Group for type of lubricant and lubrication points.

SHEET METAL—DOORS

INDEX

VALIANT-BARRACUDA

	Page
BUMPERS	9
DECK LID	
Alignment	26
Hinge	27
Recoil Adjustment	28
Lock—Adjustment	27
—Cylinder	27
—Replacement	27
Security Panel	28
Torsion Bars	27
Weatherstrips	27
DOORS	
Alignment	9
Arm Rests	12
Glass	
Convertible	
Adjustments—Door and Vent Wing	17
Regulator	19
Replacement	18
Run Channel—Rear	19
Fastback	
Adjustments—Door and Vent Wing	17
Regulator	19
Replacement	18
Run Channel—Rear	19
Hardtop	
Adjustments—Door and Vent Wing	17
Regulator	19
Replacement	18
Run Channel—Rear	19
Sedan—Front Door	
Door Glass Adjustments	15
Regulator	16
Replacement	16
Vent Wing Adjustments	15
Replacement	15
Sedan—Rear Door	
Adjustments	16
Regulator	17
Replacement	17
Stationary Glass	17
Handles—Inside	
Regulator	11
Remote Control	12
Handles—Outside	
Front	14
Rear	14
Hinge	11
Latch and Striker Pin	10
Lock Assembly	
Cylinder	13
Remote Control Assembly	13
Replacement—Front—Rear	13
Trim Panels	12
Weatherstrips	
Door (Except Sedan)	14
Sedan	14
Outer Belt	15
Roof Rail	14
Windcords	15
FENDERS	
Alignment	8
Replacement	8
Side Reflector	8
FRESH AIR DUCTS	6
GRILLE	
Alignment	9
Replacement	9
HOOD	
Alignment	6

	Page
Hinge	7
Lock	7
Replacement	6
Torsion Bars	7
QUARTER PANELS	
Garnish Mouldings	19
Glass	
Convertible	
Adjustments	22
Regulator	23
Replacement	22
Stabilizer Channel	23
Track—Front	23
Fastback	
Adjustments	24
Belt Weatherstrips	25
Lower Frame	24
Replacement	24
Roller Track—Front	25
Guide—Rear	25
Hardtop	
Adjustments	20
Regulator	21
Replacement	21
Track—Front—Rear	22
Sedan	
Adjustments	19
Regulator	20
Replacement	19
Run and Channels	20
Handles	19
Trim Panels	19
Weatherstrips	25
RADIATOR YOKE SUPPORT	
Air Shield and Cross Bar	9
Replacement	8

SERVICE PROCEDURES

FRESH AIR DUCTS (Fig. 1)

Vehicles equipped with a heater include the right side duct in the heater housing. Vehicles without a heater have a separate duct assembly for the right side. The left side duct assembly is the same for all models.

Without Heater

The fresh air duct assemblies are attached to the plenum opening. The right duct is retained by two hook type rods positioned over the plenum opening flange and held to brackets on the base of the duct with screws (Fig. 1).

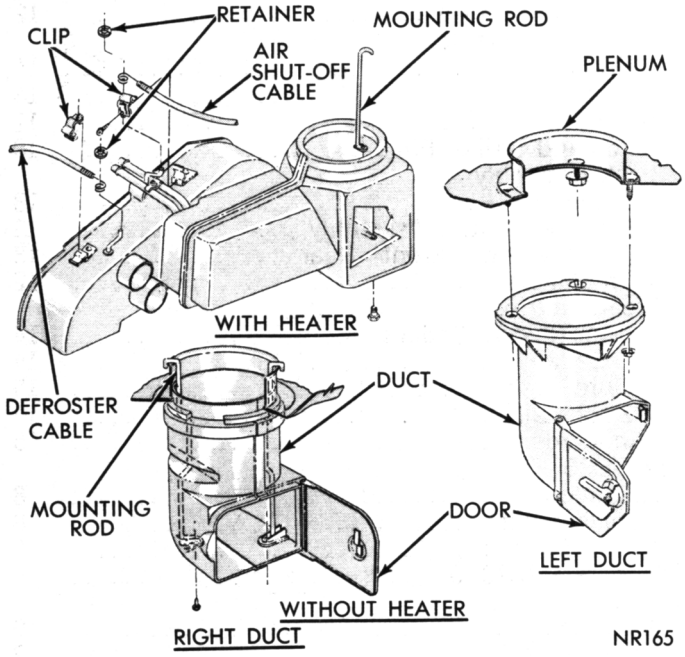

Fig. 1—Fresh Air Duct

The left duct assembly is attached directly to the plenum by positioning the duct over the plenum weld studs and securing with nuts.

With Heater

The right duct, part of the heater housing, is attached to the plenum with a single hook type rod positioned over the plenum flange and secured to the duct base with a screw (Fig. 1).

HOOD

ALIGNMENT

Prior to making any hood adjustment, inspect clearances and alignment of hood sides in relation to cowl, fenders and grille. The cowl adjustment must be made first.

REPLACEMENT

Removal

(1) Place a protective covering over cowl and fender area.

(2) Mark outline of hinges on hood to aid in installation.

(3) With an assistant, remove hinge-to-hood bolts (Fig. 2) and remove hood assembly. **Use extreme care not to permit hood to slide rearward and damage painted surfaces of the cowl and fender areas.**

Installation

(1) With an assistant, position hood on hinges and install hinge to hood bolts. Do not tighten.

(2) Align scribe markings on hood with hinge and tighten screws lightly.

(3) Close hood and inspect alignment.

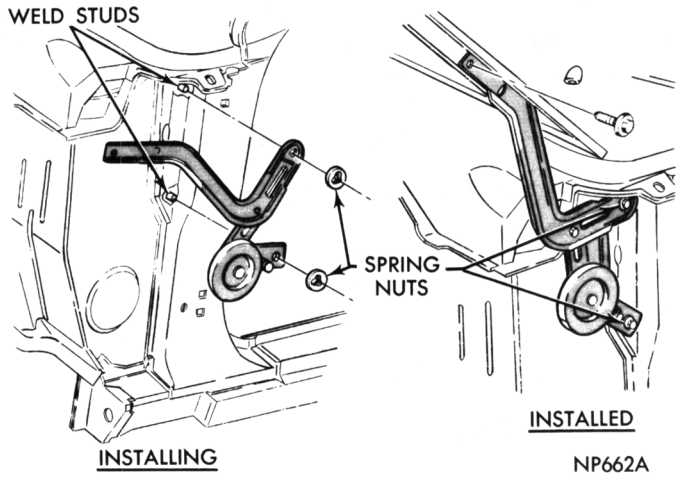

Fig. 2—Hood Adjustment

(4) Adjust alignment (Figs. 2 and 3) as necessary and tighten hood to hinge bolts 180 inch-pounds.

(5) Remove protective covering from cowl and fender area.

To adjust the lock (Fig. 4) loosen the attaching screws and raise or lower until the correct adjustment has been obtained. After making any adjustment that requires a shifting of the hood, always inspect the hood striker and the lock plate assembly for alignment.

TORSION BAR REPLACEMENT

(1) Disengage the torsion bar roller (Fig. 5) from its seat on hood hinge by forcing the roller end of bar to the rear and raising hood fully.

(2) Disengage left hand torsion bar roller from hood hinge.

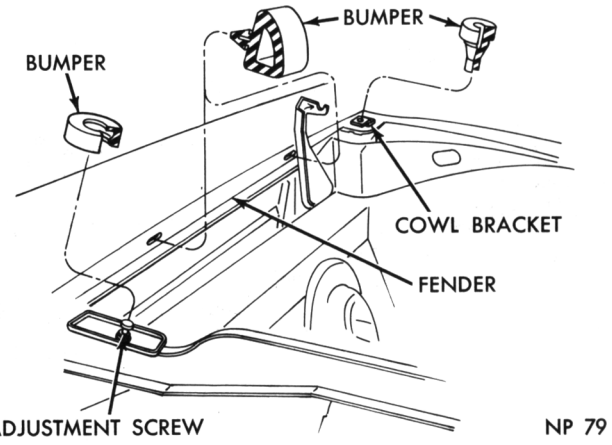

Fig. 3—Hood Leveling Adjustment

(3) Remove hood assembly.

(4) Remove torsion bars from center support and remove bars from end reinforcements.

(5) Lubricate torsion bar rollers and install on hinges.

(6) Install hood assembly and adjust alignment.

HINGE REPLACEMENT

(1) Disengage torsion bar roller from hood hinge.

(2) Scribe hinge location on hood and remove hinge to hood screws.

(3) Support hood at hinge area.

(4) Remove hinge stud spring nuts from studs (Fig. 2) and remove hinge.

(5) Lubricate hinge stud areas with lubriplate and position hinge on studs.

(6) Using a socket with putty placed on end, position a new spring nut on putty and position on stud.

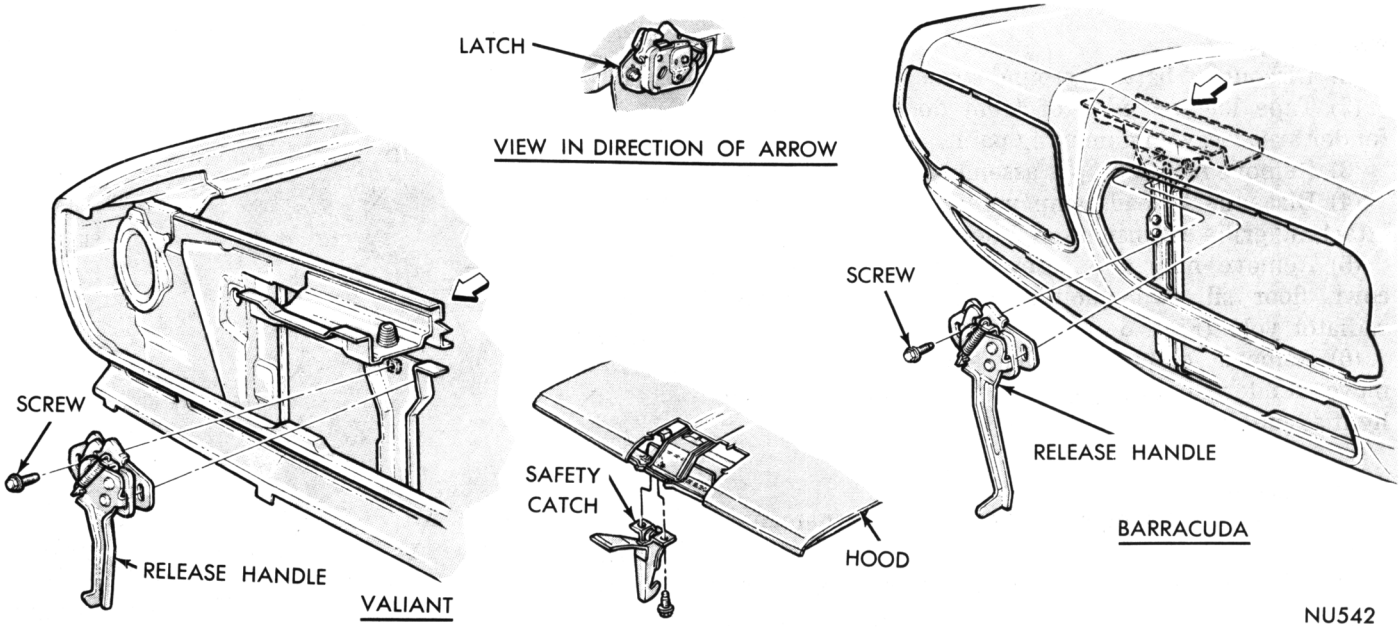

Fig. 4—Hood Latch and Release Handles

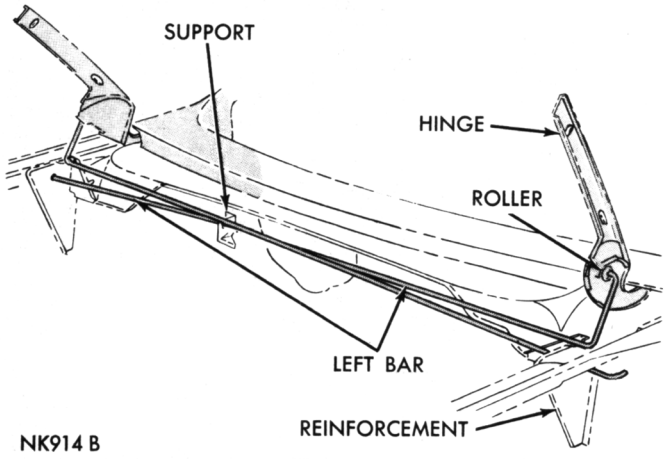

Fig. 5—Hood Torsion Bars

Press spring nuts on studs using a screw driver.

(7) Remove hood support and position hinge on hood.

(8) Install hinge to hood screws and tighten to 180 inch-pounds after alignment has been accomplished.

(9) Engage torsion bar roller with hood hinge.

FENDERS

ALIGNMENT

The fender should be adjusted to provide for equal spacing at the cowl, door front edge and door panel top edge. Alignment should be made at bottom of floor sill panel, front of hood and door outer panel upper edge.

REPLACEMENT

Removal

(1) Disconnect battery ground strap.

(2) Tape leading edge of front door and cowl to fender area to avoid damaging paint.

(3) Remove front bumper assembly.

(4) Disconnect head lamp wires and remove nuts attaching grille extension to fender.

(5) Remove nuts and screws attaching fender to cowl, floor sill, wheelhouse or splash shields and radiator yoke (Figs. 6 and 7).

(6) Remove fender assembly and if necessary remove fender mouldings, ornamentation and head light assemblies.

Installation

(1) Install head lamps, mouldings and ornamentation if removed.

(2) Carefully position fender on studs at cowl side area and align fender with mounting holes in radiator yoke. Install all mounting screws and retainer nuts.

(3) With fender correctly positioned, tighten all screws and nuts securely making certain fender is aligned at cowl and hood areas.

(4) Connect head lamp wires and install grille to fender nuts. Connect the battery ground strap.

FENDER SIDE REFLECTOR

The fender side reflector and bezel assemblies is attached to a recessed area with sealing type nuts (Fig. 8).

RADIATOR YOKE SUPPORT

REPLACEMENT

Removal

(1) Drain radiator and remove hoses from radiator.

(2) Remove radiator attaching screws and radiator.

(3) Remove hood lock striker bar, horn and headlamp wiring from yoke support.

(4) From under the fenders remove the wheelhouse to yoke support attaching screws.

(5) Remove support to frame attaching screws and remove radiator yoke support from engine compartment.

Installation

(1) Position yoke support into the engine compartment. Install the frame to core support screws finger tight.

(2) From under the fenders, install splash shield to yoke support screws finger tight only.

(3) When all attaching screws have been installed, tighten progressively.

(4) Attach the horn and lamp wires to the yoke support with the plastic straps.

(5) Install radiator, hoses, fill cooling system and inspect for leaks.

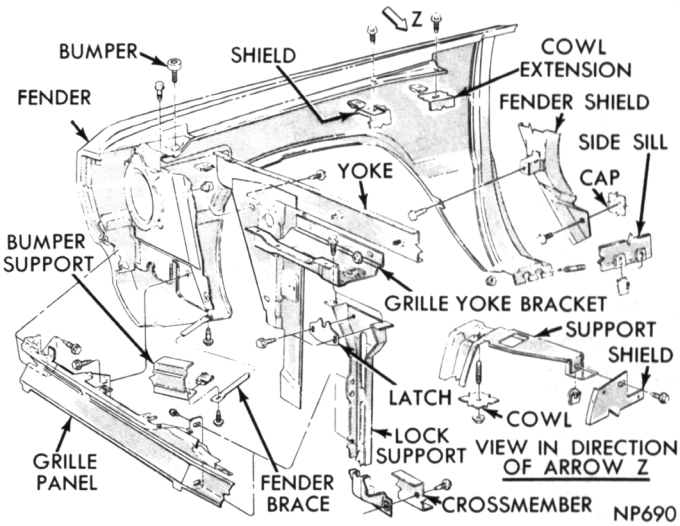

Fig. 6—Fender Attachment—Valiant

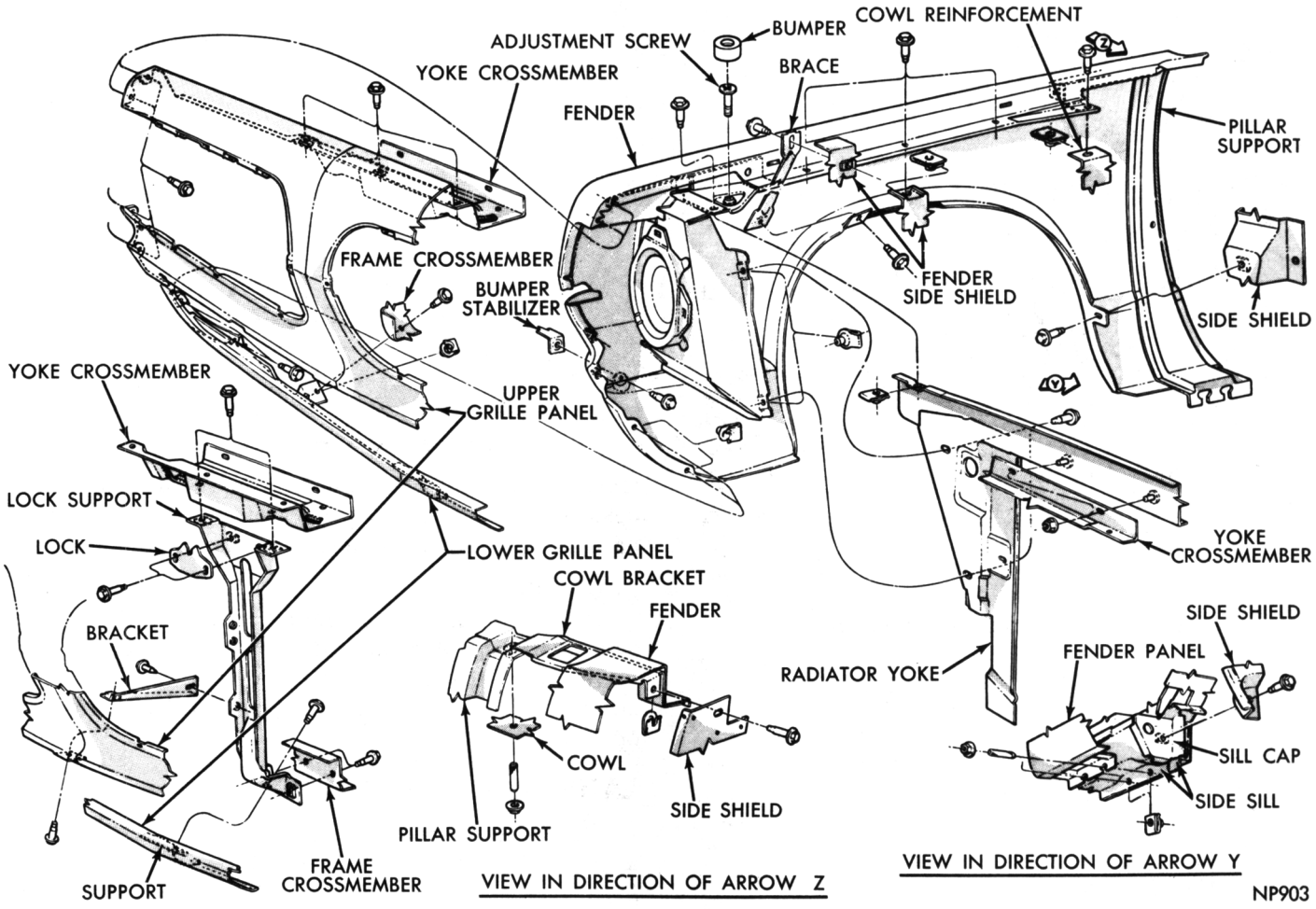

Fig. 7—Fender Attachment—Barracuda

AIR SHIELD AND CROSS BAR

Refer to (Fig. 9) for air shield and cross bar attaching points.

BUMPERS

ATTACHMENT

Refer to (Figs. 10, 11, 12 and 13) for bumper attaching points.

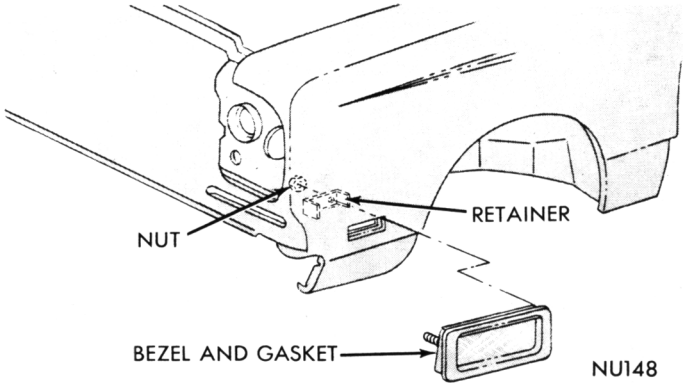

Fig. 8—Fender Side Reflector

GRILLE

ALIGNMENT AND REPLACEMENT

Refer to (Figs. 14 and 15) for grille attaching points marked "X" on the left side first to laterally align grille to frame opening. The grille must be held against the front face of the fenders at the outer edges to avoid stressing or fracturing the die cast metal.

DOORS

The service procedures for internal door components do not include obvious operations, such as removing door or quarter panel trim panels, testing operation of windows or inspecting glass fit after adjustments or replacement have been performed.

ALIGNMENT

Up and Down

Adjustment of the door can be made at either the pillar or door hinge halfs (Fig. 16).

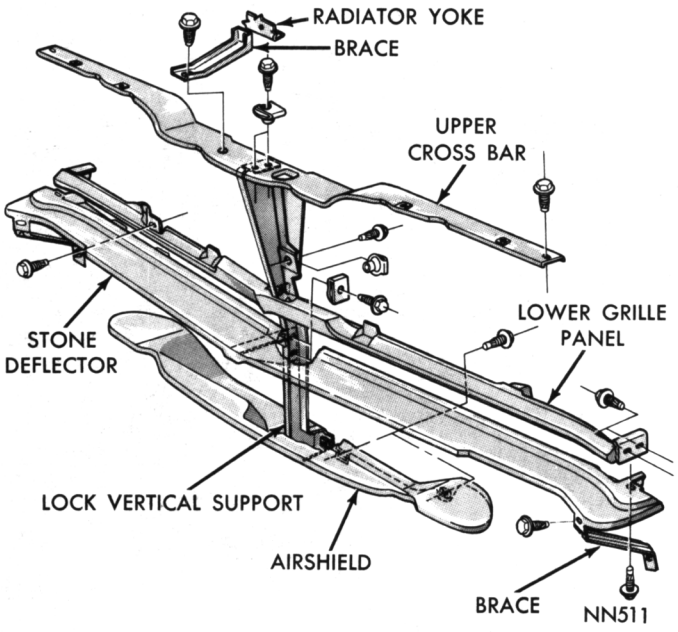

Fig. 9—Air Shield and Cross Bar

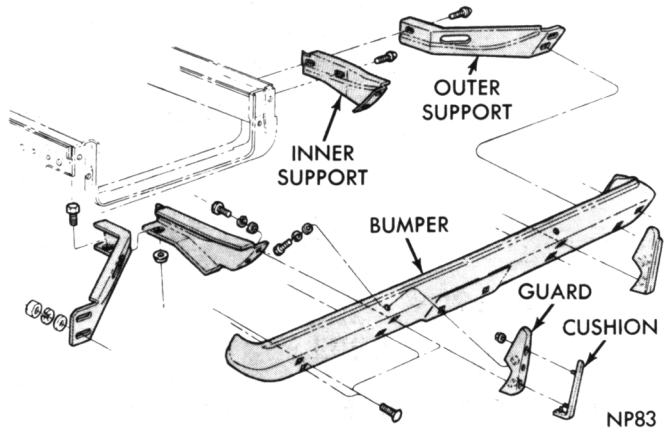

Fig. 10—Front Bumper—Valiant

Fore and Aft

Adjustment is made at the door hinge half. **Adjust only one hinge at a time.** Raising outer end of door moves upper part of door forward, when in closed position. Lowering lower part of door moves lower part forward, when in closed position.

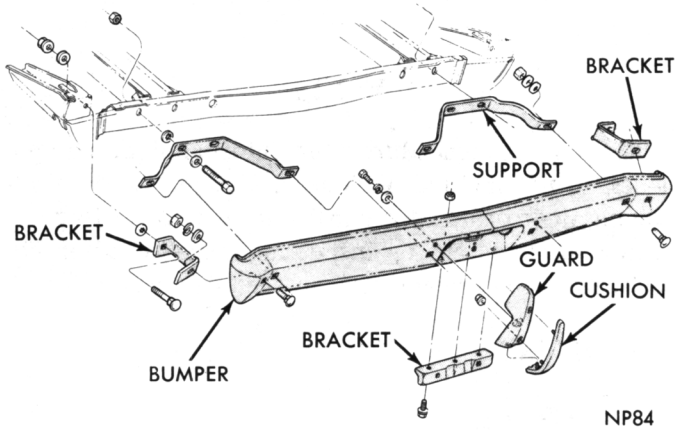

Fig. 11—Rear Bumper—Valiant

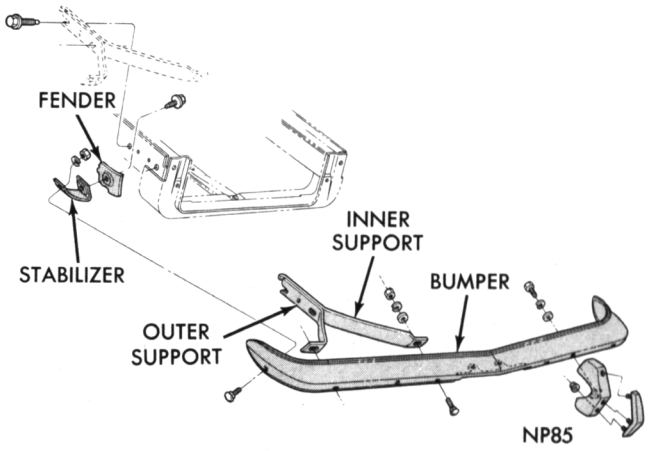

Fig. 12—Front Bumper—Barracuda

In and Out

Adjustment is made at the pillar hinge half. **Adjust only one hinge at a time.** Raising outer end of door, moves upper part of door into door opening. Lowering outer end of door, moves lower part of door into door opening.

LATCH AND STRIKER PIN

The front door cannot be locked until the door is completely closed. The silent type door latch (Fig. 17) features a rubber isolation of the round striker pin on the door frame and those surfaces acting as stops inside the latch. The latch assembly is built into a sheet metal pocket on the door face. The striker pin is attached by a single screw which also allows for adjusting.

DOOR REPLACEMENT

Front Door (All Models)

Removal

(1) With door in wide open position, place a jack,

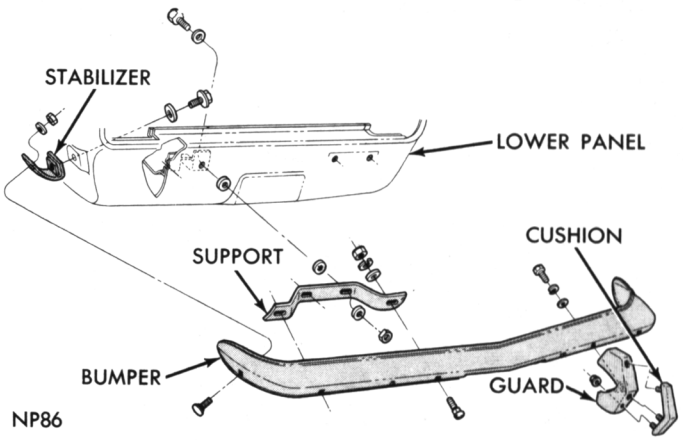

Fig. 13—Rear Bumper—Barracuda

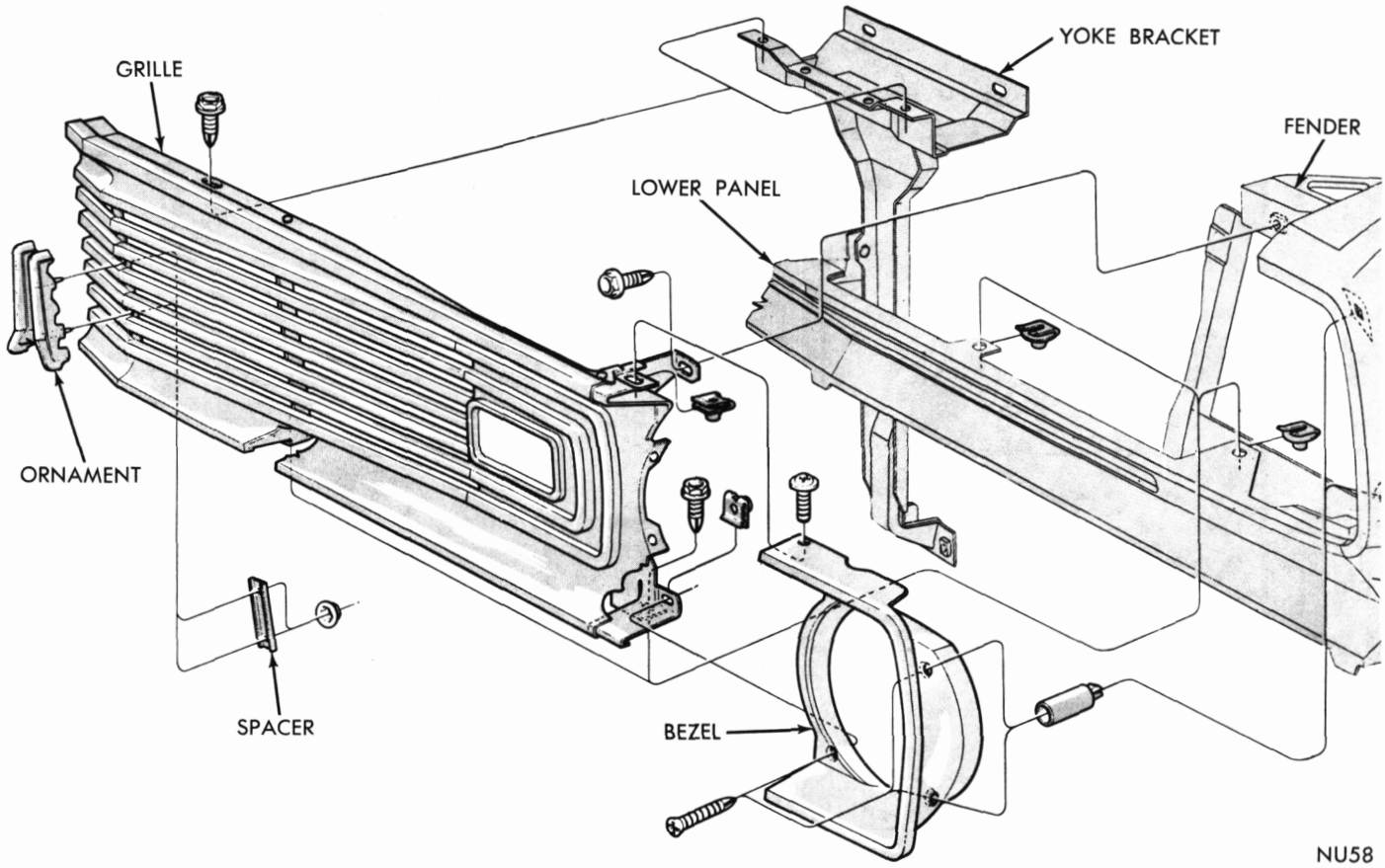

Fig. 14—Grille Assembly—Valiant

with a block of wood or pad on lifting plate of jack, as near hinge as possible. (This will hold weight of door as hinge bolts are loosened.)

(2) Remove door interior trim and hardware.

(3) Scribe a line around upper and lower hinge plates on door panel.

(4) Remove hinge attaching screws from door and remove door for further disassembly if necessary.

Installation

(1) With door inner hardware installed, place door in position in door opening, supported by a padded jack.

(2) Locate door hinge plates on door panel and install hinge attaching screws finger tight only.

(3) Adjust jack to align hinge plate scribe marks and tighten attaching screws.

(4) Complete door aligning procedure, and install door interior trim and hardware.

REAR DOOR (All Models)

Removal

(1) Open rear door and place a padded jack under door near the hinges.

(2) Remove door interior trim and hardware.

(3) Scribe aligning marks around hinge plates on door frame.

(4) Remove hinge attaching screws from door and remove door from body.

Installation

(1) With rear door inner hardware installed, support door on a padded jack and position door on hinges.

(2) Install attaching bolts finger tight.

(3) Align hinges with scribe marks.

(4) Tighten attaching screws and test door for alignment.

(5) Install door interior trim and hardware.

HINGE REPLACEMENT

The door hinges (Fig. 16) are attached to the doors by screws accessible from outside. The front door hinges are each attached to the "A" post by three screws.

The rear door upper hinges are attached to the "B" post by three screws accessible through an access hole in the "B" post.

INSIDE HANDLES

Window Regulator Handle

The window regulator handles are retained on the

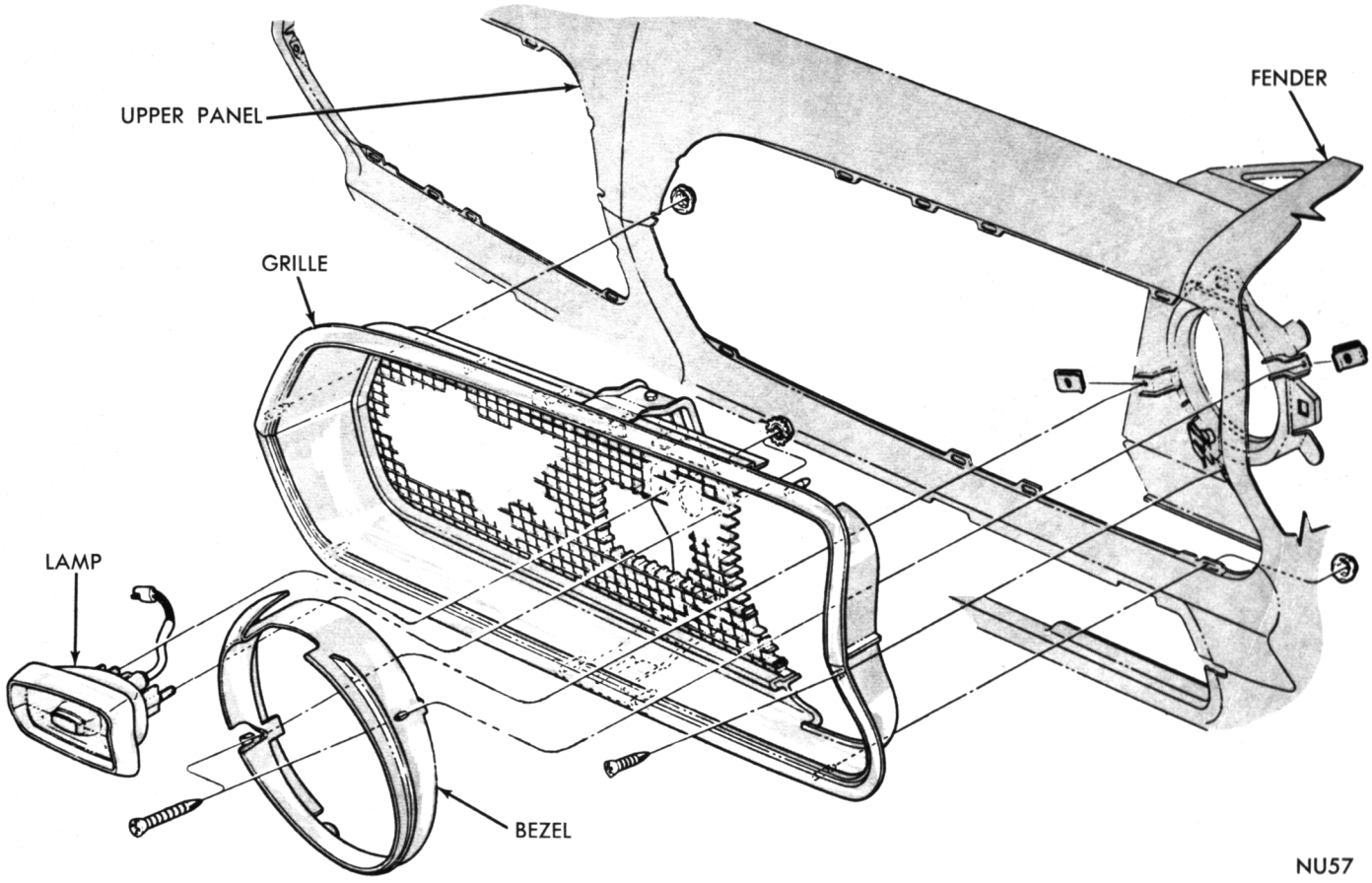

Fig. 15—Grille Assembly—Barracuda

shaft with an Allen set screw. The handles should be positioned on the shaft approximately in a horizontal position with the knobs facing rearward.

Remote Control Handle

The remote control handle (Fig. 18) is attached to the control unit with a screw at the rear inner end.

ARM RESTS

The arm rests are retained by two metal screws inserted at the bottom of the arm rest base. The pad and base can be separated and if necessary, the pad may be recovered.

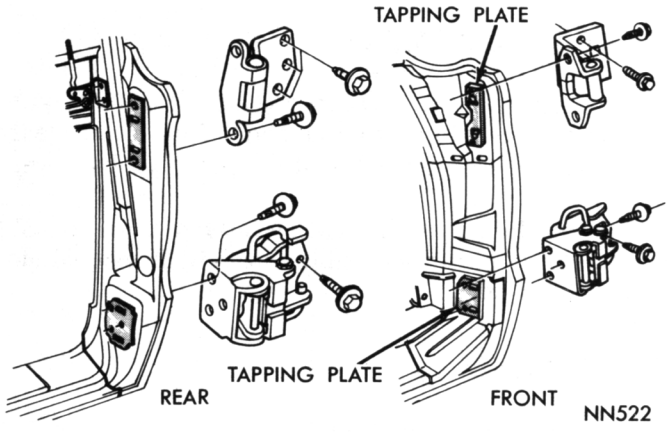

Fig. 16—Door Hinge Attachment

TRIM PANELS

Replacement

(1) Remove inside handles and arm rests.

(2) Remove screws attaching trim panel to door inner panel.

(3) Insert a wide blade screw driver between trim

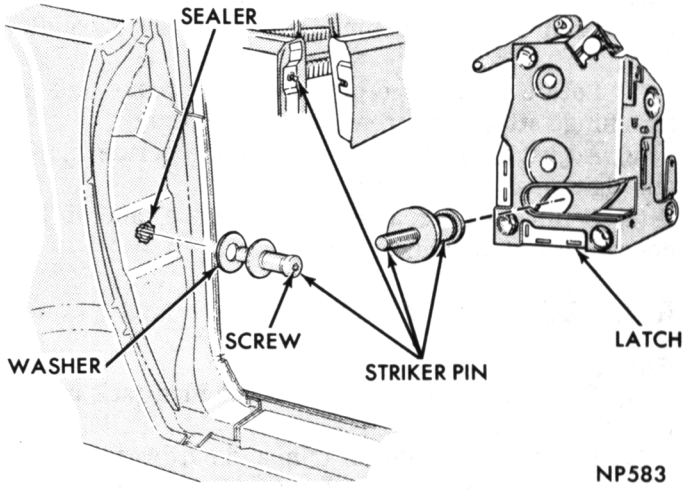

Fig. 17—Latch and Striker Pin

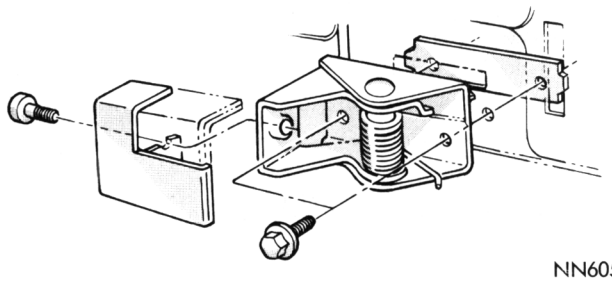

Fig. 18—Remote Control Handle

panel and door frame next to retaining clips and snap retaining clips out of door panel. Remove trim panel.

(4) Before installing door trim panel, inspect condition of watershield.

(5) Be certain the escutcheon spring is placed on the regulator shafts.

(6) Align trim panel retaining clips with holes of door frame and bump into place with heel of hand.

(7) Install trim panel to door screws.

(8) Install escutcheon washer, handles and arm rest.

LOCK ASSEMBLY

Remote Control (Manual)

Removal

(1) Raise door glass.

(2) Remove screws attaching remote control base to door panel (Figs. 18 and 19).

(3) Remove link from remote control lever.

(4) Remove control through large opening in door.

Installation

(1) When installing the remote control assembly, coat parts with lubriplate.

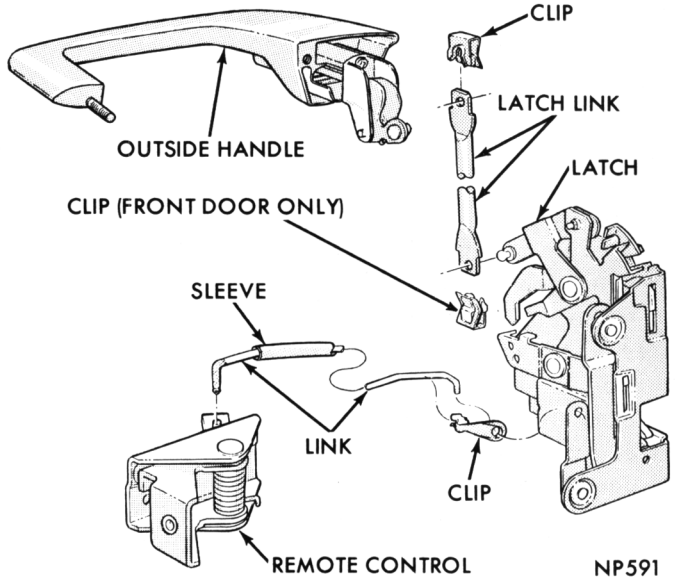

Fig. 19—Front Door Locking Mechanism

(2) Install assembly through door opening and connect link to the control lever.

(3) Install attaching screw and test operation of control.

LOCK REPLACEMENT

Removal

(1) Disconnect handle to lock link (Figs. 19 and 20), from lock by pulling link outward at lock.

(2) Disconnect locking lever rod (front door only) from lock assembly.

(3) Disconnect locking rod link from lock.

(4) Remove screws attaching lock assembly to door.

(5) Rotate lock assembly and disconnect remote control link when removing lock.

(6) Lubricate all moving points of lock assembly.

Installation

(1) Position lock assembly in door and connect remote control link to lock lever.

(2) Install lock retaining screws.

(3) Connect handle to lock link.

(4) Connect locking lever rod (front door only) to lock assembly.

(5) Connect locking lever rod and remote control link to lock.

LOCK CYLINDER

Removal

(1) With window in the up position, disconnect cylinder link (Fig. 21) from clip on lock lever **(4 door only)** and from cylinder.

(2) On **2 door models** disconnect lock link from clip on lock lever, remove link control bracket mounting screws and remove cylinder link from cylinder.

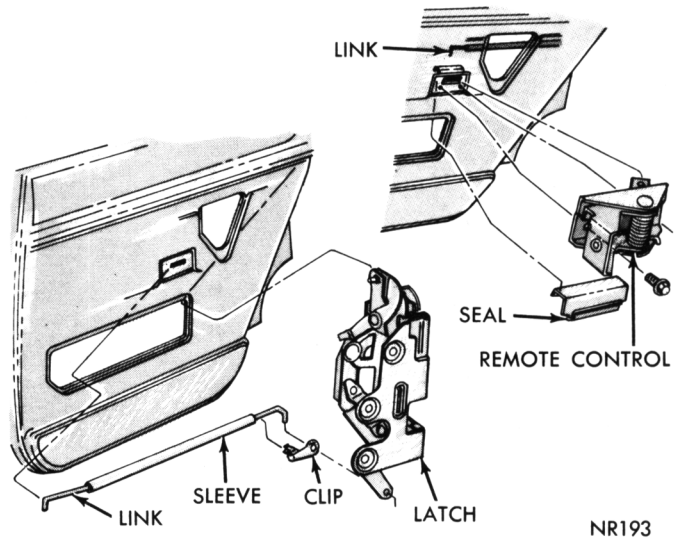

Fig. 20—Rear Door Locking Mechanism

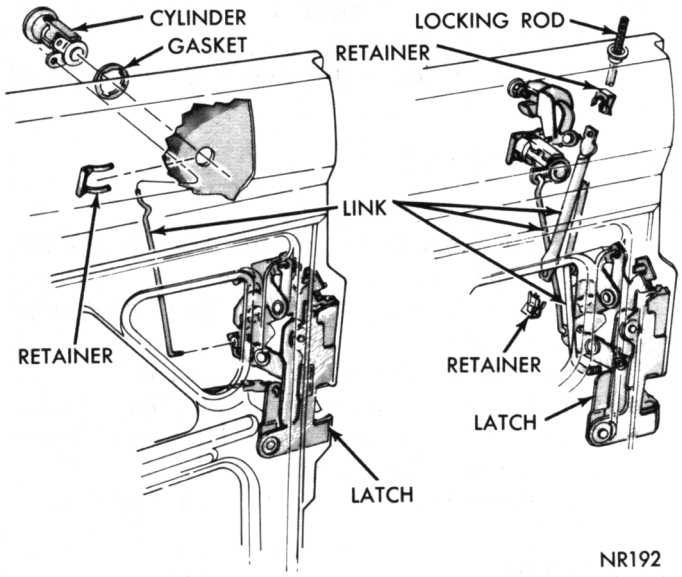

Fig. 21—Door Lock Cylinder

(3) Remove retainer from cylinder body and cylinder from door.

Installation

(1) Position cylinder in door and install retainer on cylinder body.

(2) Connect the cylinder link to cylinder arm and to clip on lock lever **(4 door models).**

(3) On **2 door models** connect cylinder link to cylinder, position link bracket on door face and install attaching screws. Connect lock link to lock.

OUTSIDE HANDLE—FRONT DOOR

Removal

(1) With door glass in up position, remove door handle attaching nuts from mounting studs (Fig. 22) and link from handle to lock.

(2) Lift handle up and remove from door.

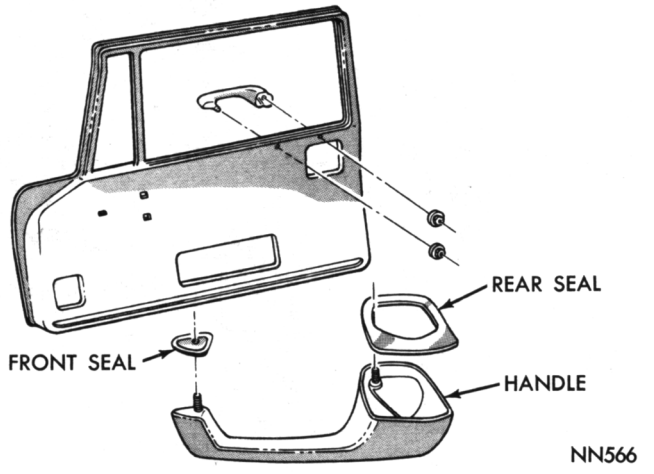

Fig. 22—Front Door Handle

Installation

(1) Install handle into door opening. Engage link from handle to lock.

(2) Attach retaining nuts and test operation of the handle.

OUTSIDE HANDLE—REAR DOOR

Removal

(1) With door open and glass in up position remove retainer from link at handle connector.

(2) Depress outside handle release button and remove link from handle connector.

(3) Remove nuts attaching handle to door and remove handle.

Installation

(1) Position handle in door and install mounting nuts.

(2) Depress handle button and position link over connector on handle.

(3) Install retainer over link and connector.

WEATHERSTRIPS AND WINDCORDS

Door Weatherstrips

Make sure all old weatherstrip particles and cement are removed before installing new weatherstrip.

Sedan Models

(1) Apply lower half of weatherstrip, starting at hinge face at belt line, working fasteners into holes in shut face of doors.

(2) Apply a 1/8 inch bead of cement to weatherstrip seating area on door upper and lower areas.

(3) Install upper half of weatherstrip on door, indexing at the upper corners.

(4) Work weatherstrip from index points to a point midway between them. **Avoid puckering or stretching of weatherstrip.**

All Models (Except Sedan)

(1) Apply a coat of cement to weatherstrip contact area on vent wing, door inner and outer panels at belt line and to contact surface of weatherstrip.

(2) Position pillar seal on weatherstrip, making sure lip of weatherstrip dove tails into groove of seal and install screws.

(3) Install weatherstrip on door, indexing at top of door at belt line with two fasteners.

Roof Rail Weatherstrip

Refer to Figure 23 for the attaching points and methods of cementing.

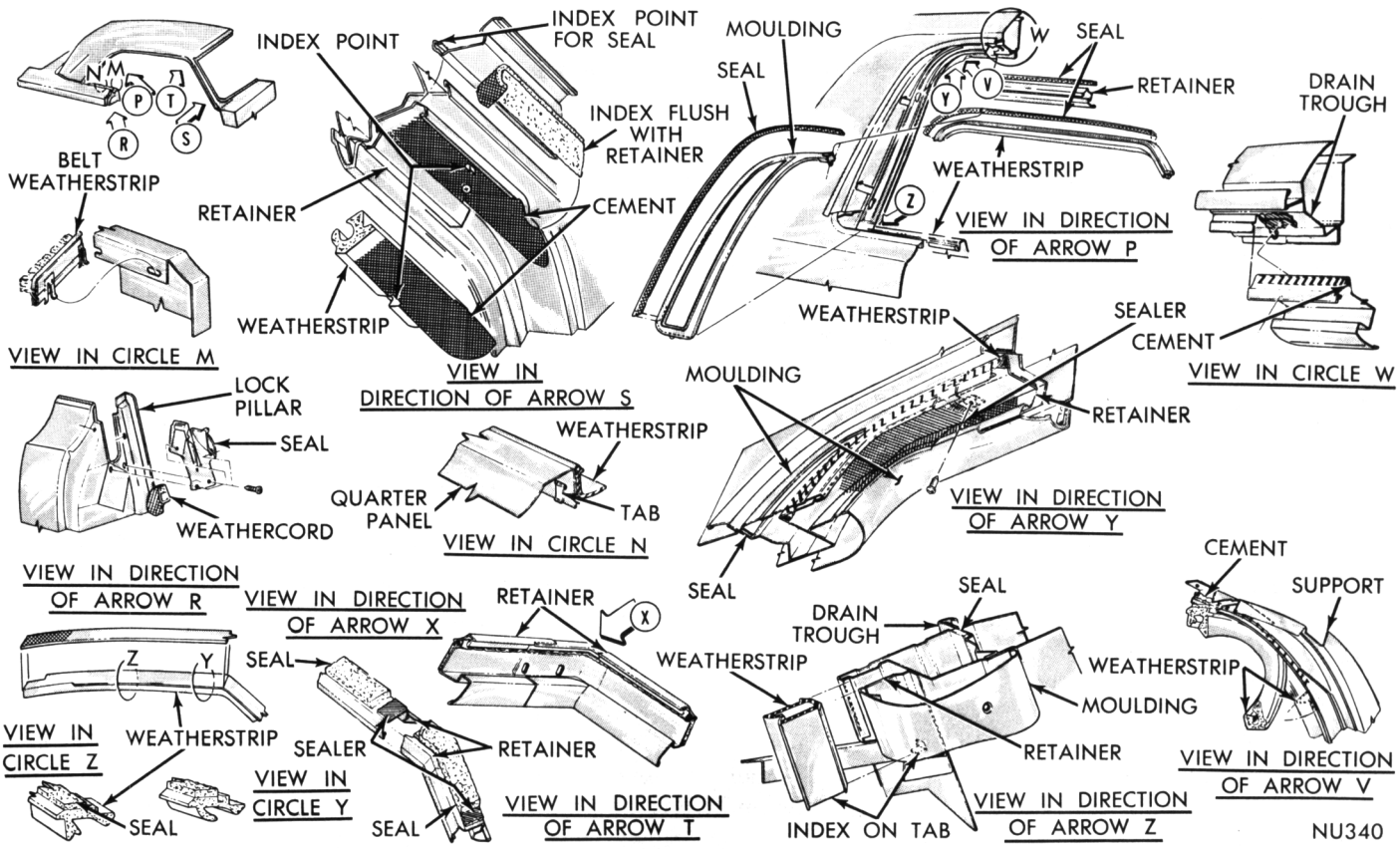

Fig. 23—Roof Rail Weatherstrips

The weatherstrip retainers are adjustable through the use of elongated attaching holes. The weatherstrip can be moved in or out for the best possible fit and seal along the top edge of the vent frame, door glass and quarter glass.

The glass up-stop must be adjusted so the fully raised glass just curls the outer lip of weatherstrip against the inner lip.

When the up-stop, roof rail weatherstrip and glass are properly adjusted, the outer lip of weatherstrip will seal along the top edge of the glass and the inner lip of weatherstrip will seal along the upper inside edge of glass.

Outer Belt Weatherstrip

The door outer belt weatherstrips are retained in the door panel with spring type retainers.

Windcords

Refer to Figure 24 for the starting points and method of attachment for the windcords.

GLASS

SEDAN MODELS

Adjustments—Vent Wing

Fore-or-aft adjustment (Fig. 25) of the upper end is accomplished by moving vent wing up or down. The assembly moves forward and downward to relieve a binding condition of the door glass and rearward and upward to remove looseness.

Loosen vent wing to door face screws and adjusting screws at lower end of division channel. With glass raised, move entire vent wing assembly up or down until glass is free in channel, **not loose,** and tighten screws. Insert a narrow blade screwdriver through opening in weatherseal, just ahead of lower pivot, to turn adjusting screws.

Door Glass

Adjustments

Front door glass adjustments for 2 and 4 door sedans (Fig. 25) are the same.

Lower glass and move division channel rearward to remove excessive looseness of glass without creating a binding condition. Tighten adjusting screws at lower end of channel.

It may be necessary to readjust the lower end of channel, to gain alignment of the channel and rear glass run.

If necessary, adjust lower end of rear run channel in or out. Adjust down-stop so top edge of glass is flush with top edge of glass opening in door.

Vent Wing Replacement

Removal

(1) Remove nut and washer from lower vent frame stud.

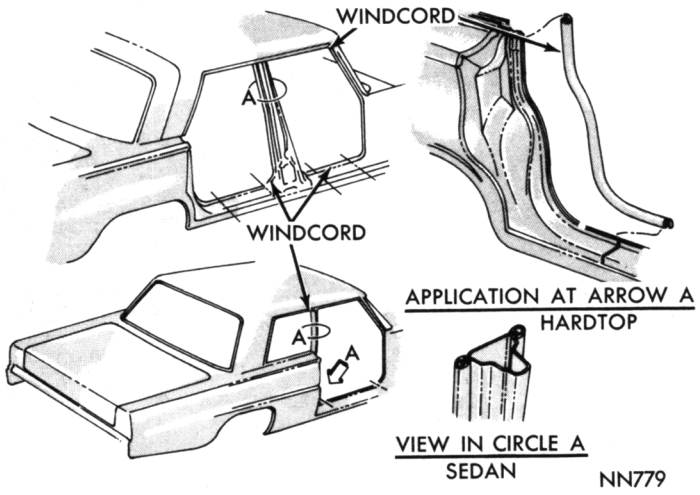

Fig. 24—Windcords

(2) Remove vent frame to door screws.

(3) With glass in down position, disengage lower frame stud from door bracket, window regulator arms from lift bracket and slide glass out of run channels.

(4) Disconnect outer belt weatherstrip for a short distance to provide clearance for the division channel.

(5) Tilt top of vent frame toward rear of door and up out of door.

Installation

(1) Place vent assembly into door.

(2) Move vent frame forward into position.

(3) Install attaching screws. **Do not tighten.**

(4) Position door glass in run channel and install regulator arms and clips.

(5) Position lower run channel adjusting stud into door bracket.

(6) Align window run channel.

Door Glass Replacement

Removal

(1) Loosen front run channel lower mounting screw (Fig. 25).

(2) Move run channel forward and slide glass out of channel.

(3) Remove regulator arm from lift bracket channel.

(4) Remove glass from door.

(5) Push plug out of lift bracket rivet.

(6) Pinch expandable ends of rivet together and push rivet out of glass.

Installation

(1) Position lift bracket and gasket on glass and install rivet and plug.

Before installing glass, lubricate regulator slide channel.

(2) Position glass into door.

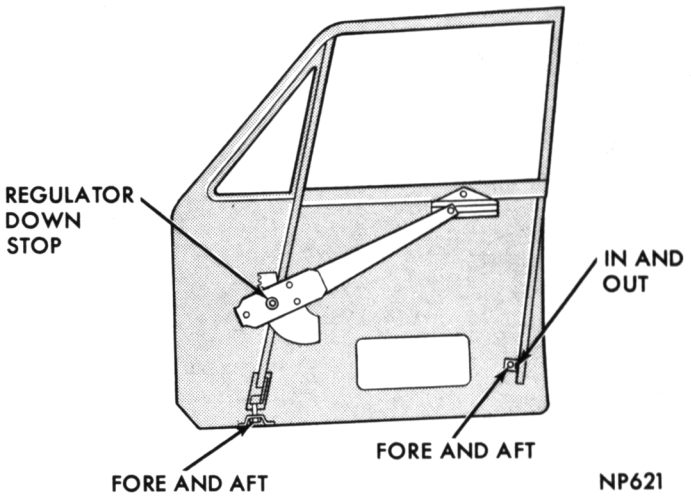

Fig. 25—Front Door Glass Adjustments—Sedan

(3) Position regulator arm roller into lift bracket.

(4) Position glass into glass run channels and adjust door glass.

Regulator Replacement

The regulator assemblies are attached to the door inner panels by screw and washer assemblies. When removing a regulator, the door glass should be fully lowered. Slide regulator rearward to disengage from lift bracket and guide assembly. Lubricate tooth area of regulator when reinstalling.

REAR DOORS

Adjustments

The front glass run is fixed. The division channel can be adjusted fore or aft, as well as in or out (Fig. 26).

If adjustment of the division channel is necessary, loosen the upper channel attaching screw. Generally, sufficient movement of the channel is possible at this point to correct any binding or looseness of the glass.

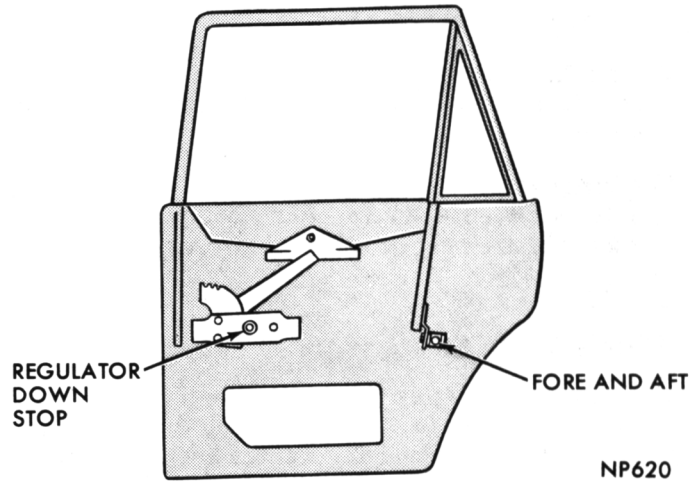

Fig. 26—Rear Door Glass Adjustments—Sedan

If additional channel movement is required, lower the glass and loosen the two attachment screws at lower end of channel. If additional in-or-out movement is required to obtain proper alignment of the glass, adjust the in-or-out adjusting screw at the lower end of the division channel.

Glass Replacement

Removal

(1) Loosen window track adjusting nuts (Fig. 27) and remove glass from run channels.
(2) Remove regulator arm from lift bracket channel.
(3) Remove glass from door.
(4) Remove lift bracket from glass.

Installation

Before installing glass, lubricate all moving parts of regulator with lubriplate.
(1) Install lift bracket on glass.
(2) Position glass into door opening.
(3) Install regulator arm roller into channel of glass lift bracket.
(4) Position glass into run channels and adjust glass.

Regulator Replacement

Removal

Service procedures for the regulator are the same as for front doors.

Rear Door Stationary Glass

Removal

(1) Remove division channel attaching screws at upper and lower ends (Fig. 28) and remove channel.
(2) Move the glass and weatherstrip assembly forward and out of window opening.
(3) Inspect the weatherstrip.

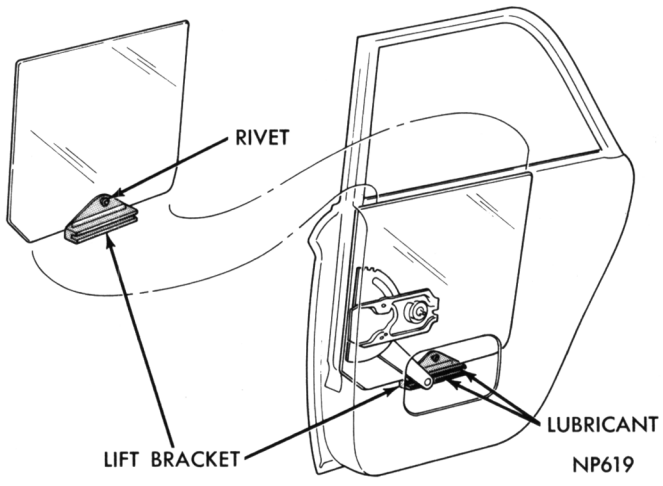

Fig. 27—Rear Door Glass Replacement—Sedan

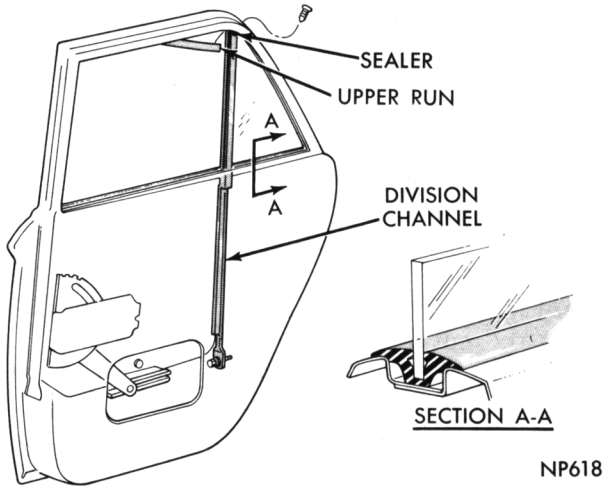

Fig. 28—Rear Door Stationary Glass—Sedan

Installation

(1) Position glass and weatherstrip assembly to window opening and move rearward into upper frame.
(2) Insert division channel run into channel.
(3) Apply a 1-1/2 inch length of sealer to joint area of division channel.
(4) With front glass in down position, insert division channel into door and move firmly against stationary glass weatherstrip.
(5) Install upper and lower attaching screws but do not tighten.
(6) Adjust the door glass.

HARDTOP-CONVERTIBLE-FAST BACK MODELS

Door Glass Adjustments (Fig. 29)

(1) Raise door glass 2/3 way up. Adjust upper attachment of rear run channel to center glass between inner and outer weatherstrips and tighten screw.
(2) Raise window, seating top of glass and front

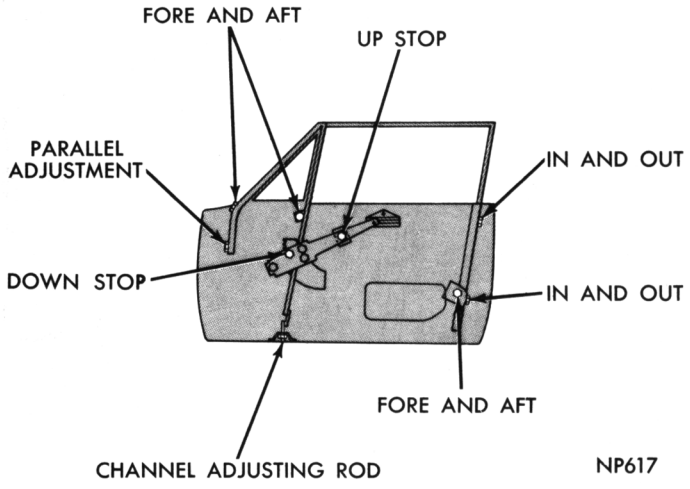

Fig. 29—Door Glass Adjustment—Hardtop—Convertible

of vent wing fully against and parallel to roof rail weatherstrip. Tighten vent wing belt line front screw.

(3) Adjust hinge face stud to align upper edge of glass to roof rail weatherstrip and tighten nut.

(4) Tighten vent wing belt line rear screw.

(5) Position up-stop down against regulator arm and tighten screw.

(6) Lower glass 1/2 way and tighten rear track lower screw.

(7) Tighten vent wing lower division channel adjusting rod nut.

(8) Lower glass so top is even or slightly below belt line outer panel.

(9) Position regulator plate stop against stop on sector and tighten nut.

GLASS REPLACEMENT (Fig. 30)

Removal

(1) Remove up-stop from door.

(2) Remove nut and washer from adjusting rod at bottom of vent wing channel.

(3) At upper rear corner of belt, remove drive screw from vent wing.

(4) Remove nut and washer from vent wing adjusting stud at hinge reinforcement.

(5) Remove vent wing to hinge fence screw and washer.

(6) Raise vent wing and door glass, tilt toward lock face of door and disengage regulator arm from glass lift bracket and remove from door.

(7) Invert vent wing and door glass assembly and remove adjusting stud, rod and retainer from vent wing (Fig. 31).

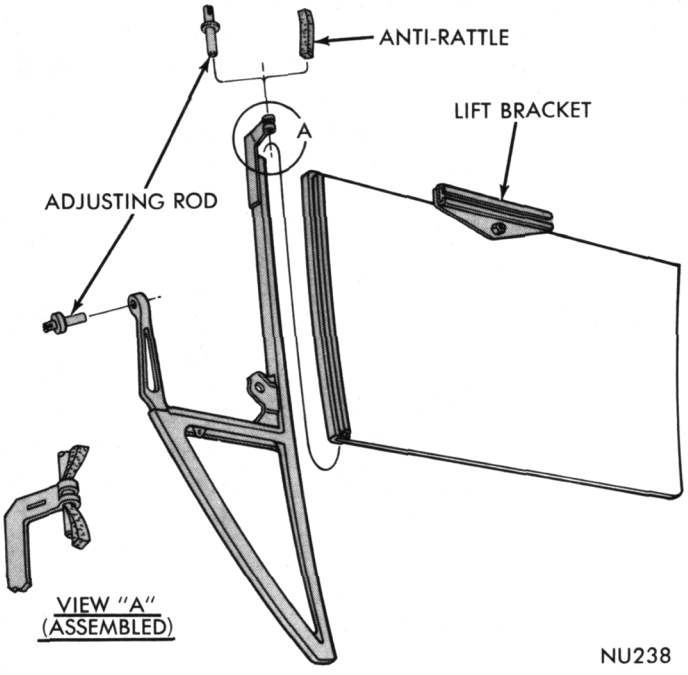

Fig. 30—Glass Replacement—Hardtop—Convertible

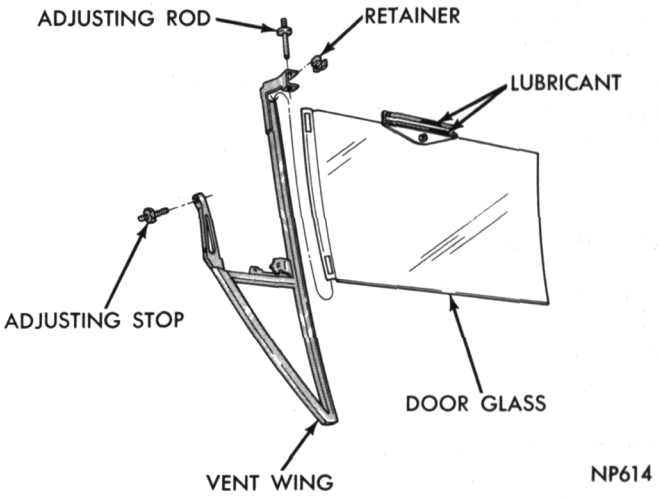

Fig. 31—Vent Wing and Door Glass—Hardtop—Convertible

(8) Slide door glass out of vent wing channel.

(9) Remove slide, weatherstrip, pin and lift bracket assembly from door glass (Fig. 32).

Installation

(1) Position door glass and rear frame in upright position and install lift bracket and slide assemblies (Fig. 32).

(2) Invert vent wing and install door glass in inverted position.

(3) Install adjusting stud, rod and retainer in vent wing and lubricate sliding surfaces of door glass lift bracket (Fig. 31).

(4) Insert lowest point on division bar through upper lock face corner, twist to insert between panels and slide forward.

(5) Tilt lock face side of assembly upward so vent wing hinge adjusting stud will enter hole in inner reinforcement and rear edge of glass fits squarely in rear channel run (Fig. 33) and install nut and washer.

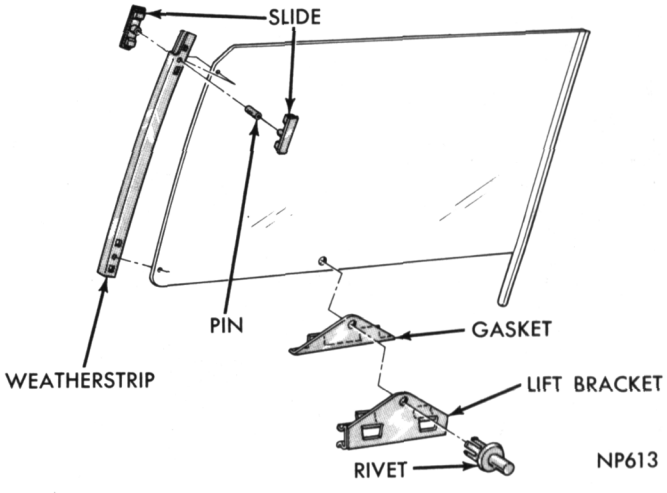

Fig. 32—Door Glass Assembly—Hardtop—Convertible

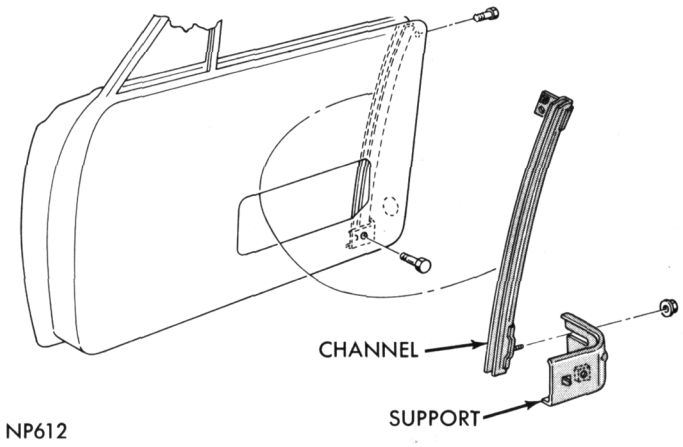

Fig. 33—Rear Channel Assembly—Hardtop—Convertible

(6) Insert adjusting rod in hole of bracket and install nut and washer.
(7) Install drive screw in vent wing at rear belt.
(8) Install up-stop and adjust door glass.

Regulator Assembly

For a good engagement of the glass in the division channel run, shift the regulator assembly forward. It it important that the glass seat fully in the division channel. Alignment of the front edge of the glass with the division channel is also important. Shift the rear of the regulator assembly up or down (Fig. 34) to level the glass and align it with the division channel.

Rear Run Channel

The rear run channel is attached to the door inside panel face with screw and washer assemblies. In and out adjustment of the channel is made to align the door glass in the channel.

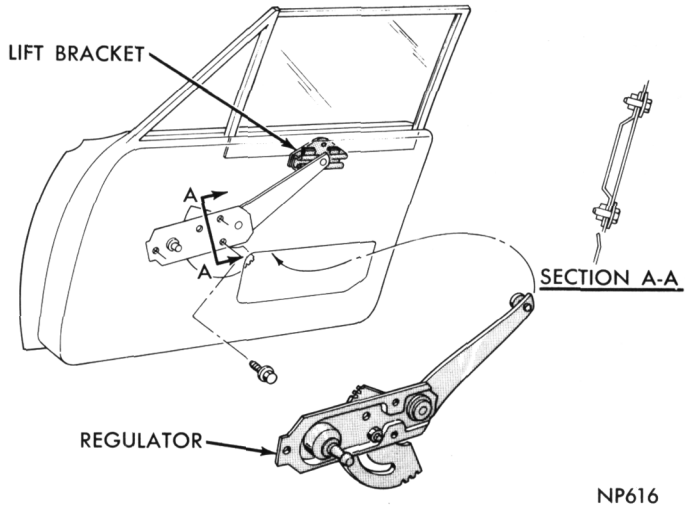

Fig. 34—Regulator Assembly—Hardtop—Convertible

QUARTER PANELS

GARNISH MOULDINGS

The garnish mouldings should be positioned and held in place to assure satisfactory alignment. Do not over-tighten the mounting screws, or the moulding will become damaged at the screw hole area.

TRIM PANELS

The rear seat cushion and back must be removed to gain access to the trim panel attaching screws. The trim panels are attached with screws and clips. When installing, make certain the watershield is properly cemented and positioned.

HANDLES

The regulator handles are attached with allen head screws.

SEDAN MODELS

Adjustments (Fig. 35)

(1) Raise quarter window to 1/2 inch below window opening frame.
(2) Adjust pivot bracket so top of glass is parallel to window opening frame and tighten nuts.
(3) Lower window until rear lower edge of glass is 1/4 inch above wheelhouse and tighten regulator down stop nut.

Glass Replacement

Removal

(1) Lower glass and through front access opening, remove clip from regulator arm stud pin (Fig. 36).
(2) Pull regulator arm stud out of bushing.
(3) Push up on front of glass while holding arm stud pin, until front of glass is clear of stud.

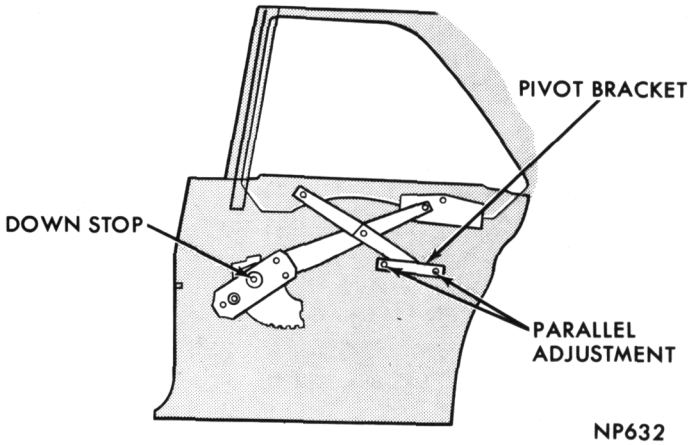

Fig. 35—Quarter Window Adjustments—Sedan

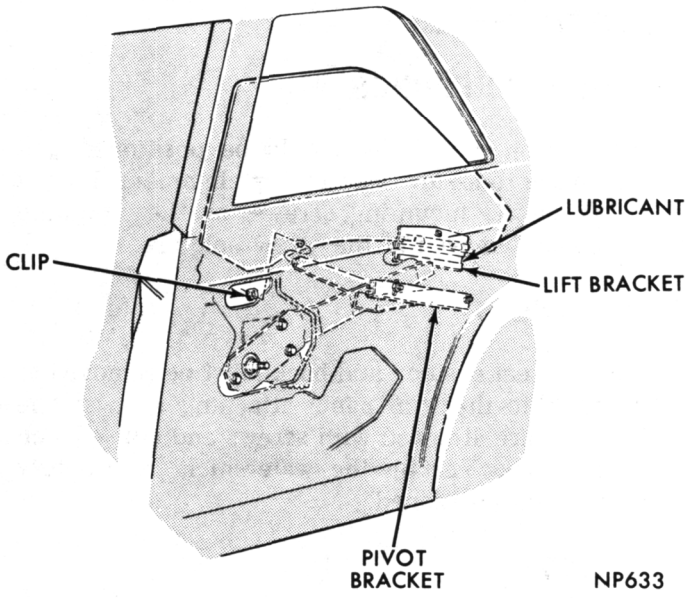

Fig. 36—Quarter Window Replacement—Sedan

(4) Raise and rotate front of glass until lift arm bracket clears regulator arm stud.

(5) Lower glass to bottom of quarter panel and remove outer belt weatherstrip.

(6) Pull glass up and out.

Installation

(1) If glass is to be replaced, remove lift bracket (Fig. 37) and attach it to new glass.

(2) Roll regulator down until front regulator stud is accessible at front access opening.

(3) Lower quarter glass and bracket to bottom of quarter panel and install outer belt weatherstrip.

(4) Raise glass and position lift bracket over regulator arm roller.

(5) Insert regulator front arm stud into bushing in glass, install clip and adjust glass.

Regulator Assembly

The regulator assembly (Fig. 38) is attached to the inner panel with screw and washer assemblies. Inspect rollers on regulator studs and apply lubricant to the slide area of the pivot channel prior to installing regulator.

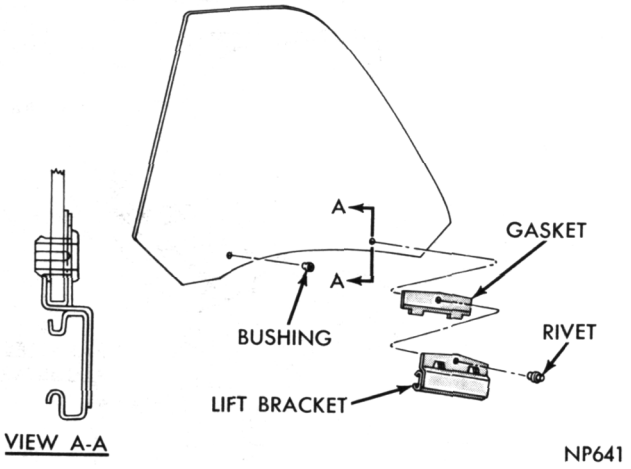

Fig. 37—Quarter Glass Assembly—Sedan

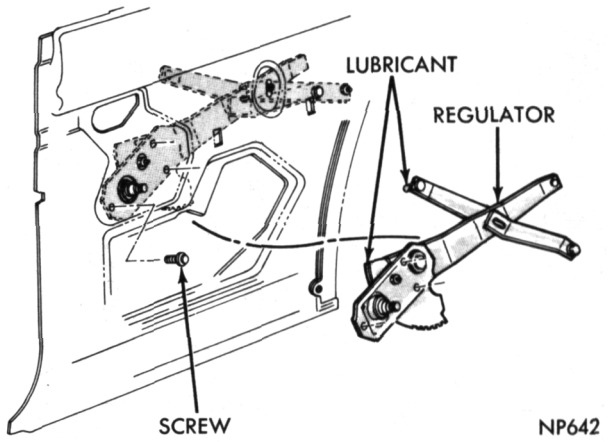

Fig. 38—Regulator Assembly—Sedan

Run Channels

The glass run channels are a press fit in the front channel and window opening frame (Fig. 39).

HARD TOP MODELS

Adjustments

(1) Raise quarter window 2 inches above belt line.

(2) Adjust top of front and rear tracks (Fig. 40) until glass just touches the outer belt weatherstrip and tighten nuts.

(3) Raise window to the upper weatherstrip and adjust regulator so glass at front contacts weatherstrip and is parallel to the weatherstrip bead. Tighten regulator screws.

(4) Adjust bottom of front and rear tracks until upper edge of glass seals against roof weatherstrip. Tighten nut on rear track only.

(5) Tighten adjusting screw on bottom of front track to lower brace.

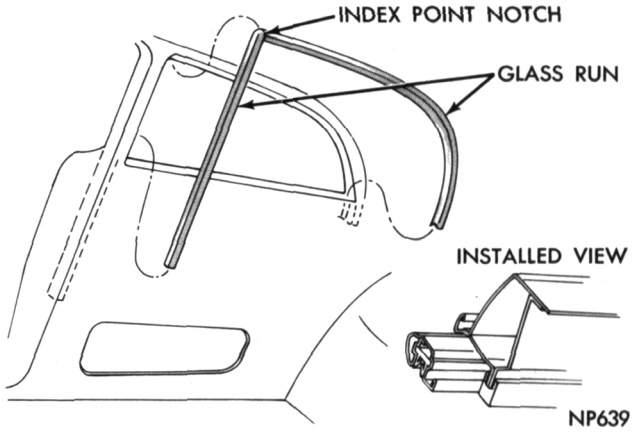

Fig. 39—Quarter Window Glass Run—Sedan

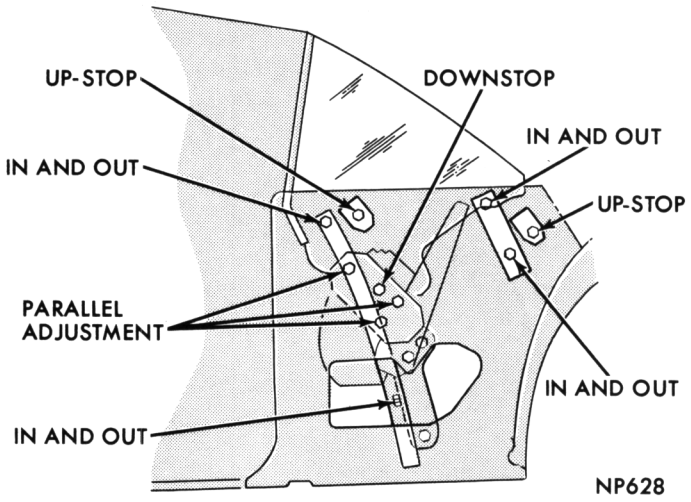

Fig. 40—Quarter Window Adjustments—Hardtop

(6) Position front and rear up-stops (Fig. 41) to glass lower frame stops and tighten screws.

(7) Adjust regulator down-stop (Fig. 40) so glass contacts outer weatherstrip lightly for full length.

GLASS REPLACEMENT

Removal

(1) With glass in mid-position, remove spring nuts from regulator arm studs (Fig. 42) and studs from rollers.

(2) Remove up-stops from lower frame (Fig. 41).

(3) Remove glass assembly from door.

(4) Remove slide and roller from glass frame rear track and roller assemblies from tracks in front section (Fig. 43).

Installation

(1) Position roller assemblies and slide to front and rear tracks of glass lower frame.

(2) Insert glass assembly into quarter panel, spring regulator arms inboard and insert studs in rollers

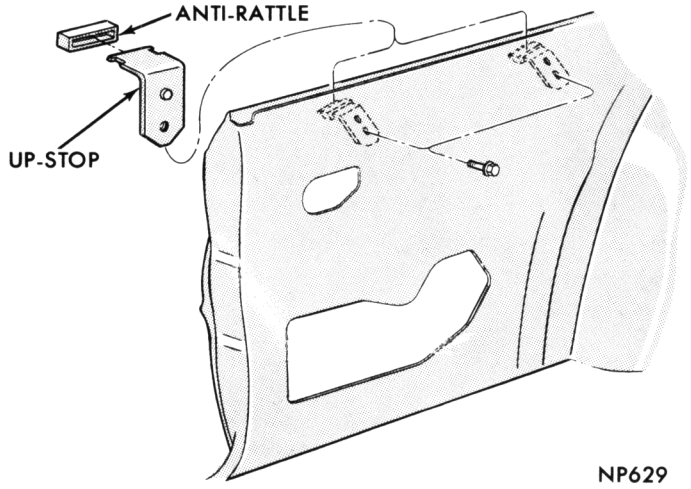

Fig. 41—Quarter Window Up-Stops—Hardtop

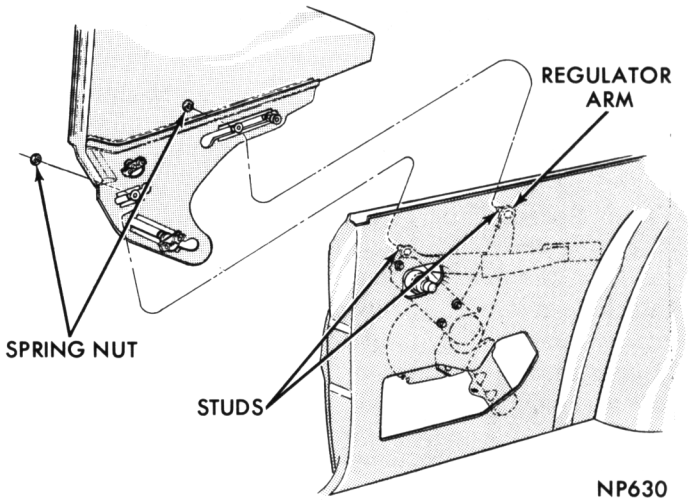

Fig. 42—Quarter Window Replacement—Hardtop

and install spring nuts.

(3) Install up-stops and adjust quarter window.

Regulator Assembly

Hardtop models use a two arm regulator (Fig. 44).

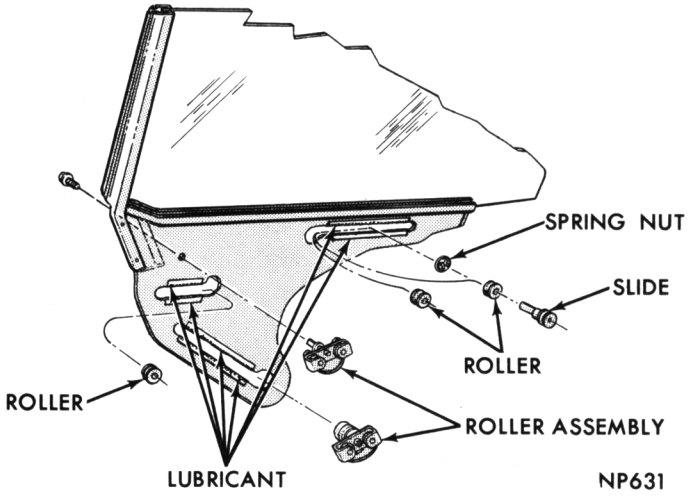

Fig. 43—Quarter Window Assembly—Hardtop

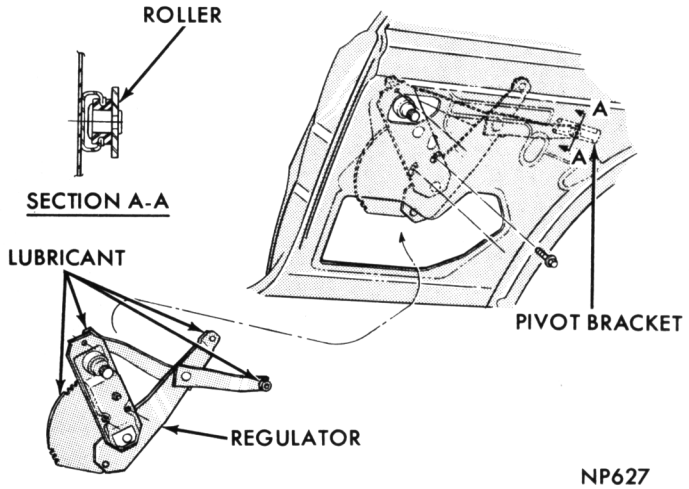

Fig. 44—Regulator Assembly—Hardtop

To remove the quarter window regulator, it is advisable to first remove the glass. The regulators are attached to the inner panels by screws. After the regulator and glass have been installed, test the operation of the regulator and adjust the glass.

Front Roller Track and Brace

The front roller track (Fig. 45) is replaced from between the quarter inner and outer panels with the quarter window fully lowered. Disconnect track from brace, remove sleeve nut and washer and rotate track approximately 90 degrees to disengage from rollers when removing.

Rear Track

The rear track (Fig. 46) is replaced through the large opening in quarter inner panel with quarter window fully closed. Lubricate sliding surfaces of track assembly when installing.

CONVERTIBLE MODELS

Adjustments

(1) With door closed and header locked, set window at mid-position.

(2) Adjust rear stabilizer and front track upper attachments so glass touches lightly on outer belt weatherstrip (Fig. 47).

(3) Raise window until top of glass touches lightly on the roof rail center and rear weatherstrips.

(4) Push regulator forward and adjust pivot bracket so glass is parallel to rear edge of door glass and rear roof rail weatherstrip effecting a proper seal.

(5) Adjust rear stabilizer and front track lower attachments outboard until upper edge of glass seals against upper weatherstrip.

(6) Position-up-stops to stops on glass lower frame.

(7) Lower window until top edge of glass is even with or slightly below panel belt line.

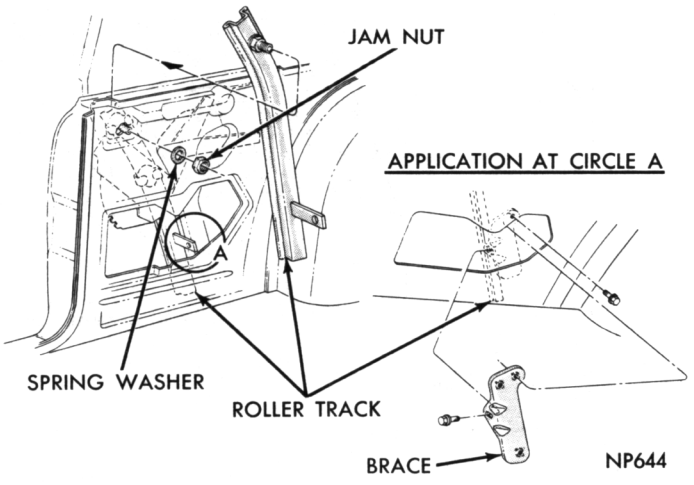

Fig. 45—Front Roller Track and Brace—Hardtop

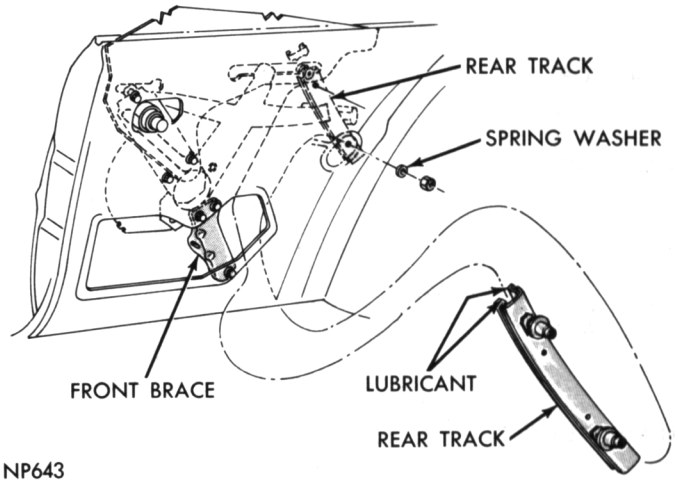

Fig. 46—Rear Roller Track—Hardtop

(8) Position stop on regulator plate against stop on sector.

GLASS REPLACEMENT

Removal

(1) Remove spring nuts from regulator arm studs (Fig. 48).

(2) Remove front and rear up-stops (Fig. 49).

(3) Remove regulator arm studs for rollers.

(4) Raise window assembly out of panel.

(5) Remove roller and bracket assemblies and rollers from glass lower frame tracks (Fig. 50).

Installation

(1) Apply lubricant to sliding surfaces of glass lower frame tracks.

(2) Install roller and bracket assemblies rollers in lower frame tracks.

(3) Lower glass assembly into panel and into front track and rear stabilizer, regulator studs into rollers and install spring nuts.

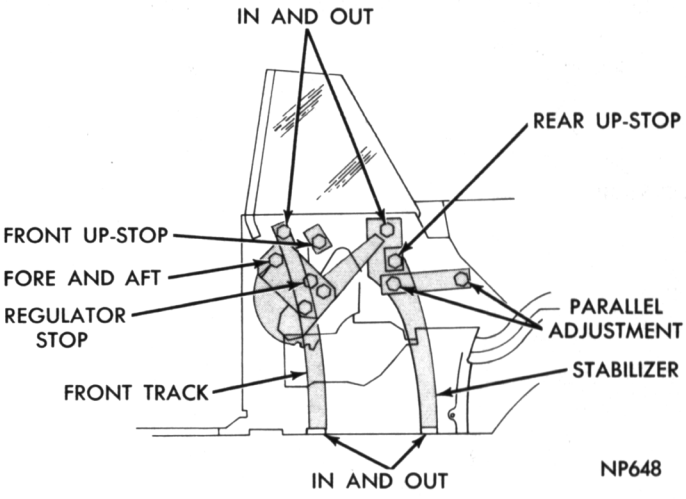

Fig. 47—Quarter Window Adjustments—Convertible

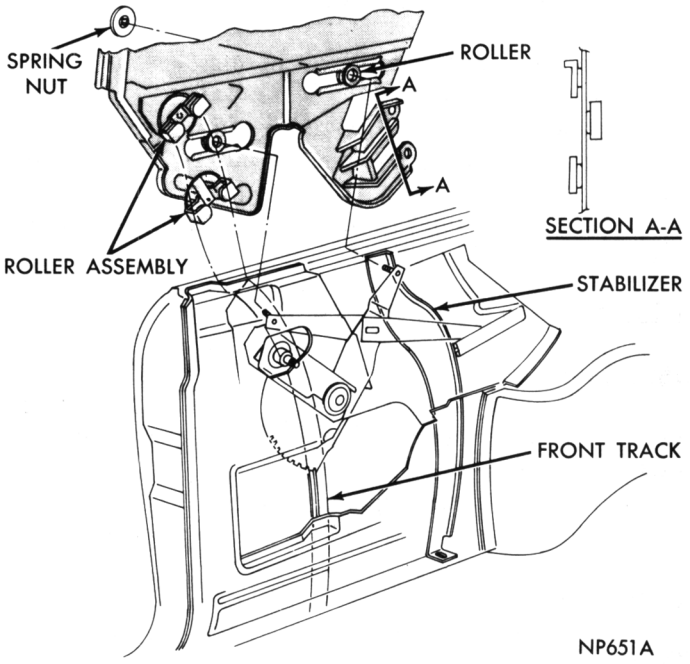

Fig. 48—Quarter Window Replacement—Convertible

(4) Install up-stops and adjust quarter window.

Regulator Assembly

The regulators (Fig. 51) are attached to the quarter inside panel with screw and washer assemblies. When installing a regulator, lubricate the tooth contact area approximately 1/2 inch wide along the entire length of the arc on the outboard side of the sector and studs on the front and rear studs.

Front Track

The front track (Fig. 52) is attached to the inner panel at the top end and to a support at the lower end. The upper attachment permits "in and out" adjustment and the lower end permits "fore and aft" and "in and out" adjustments.

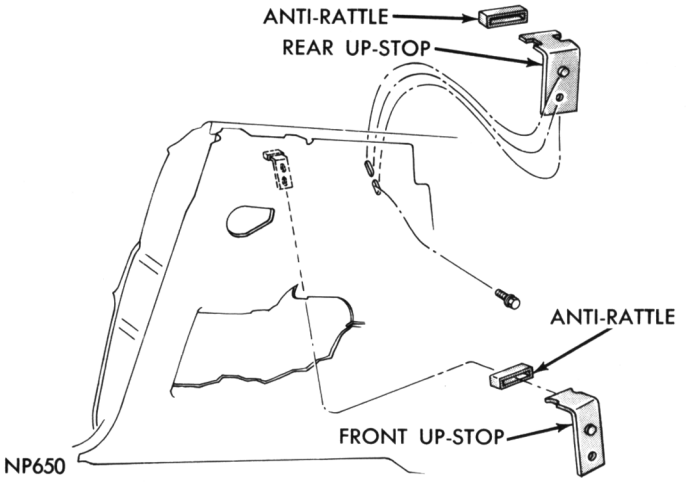

Fig. 49—Quarter Window Up-Stops—Convertible

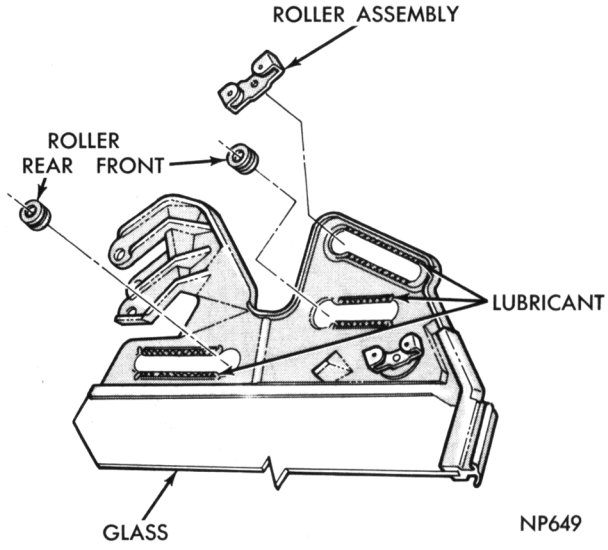

Fig. 50—Quarter Window Assembly—Convertible

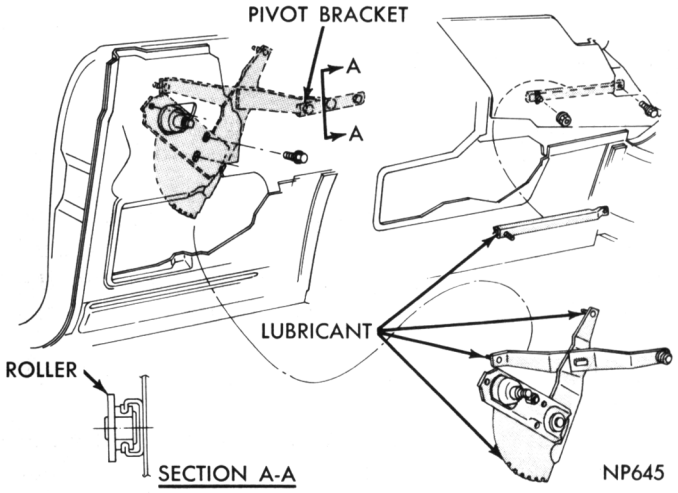

Fig. 51—Regulator and Pivot Bracket—Convertible

Stabilizer Channel

The rear stabilizer (Fig. 53) permits "in and out" adjustment at the top end which is attached to the

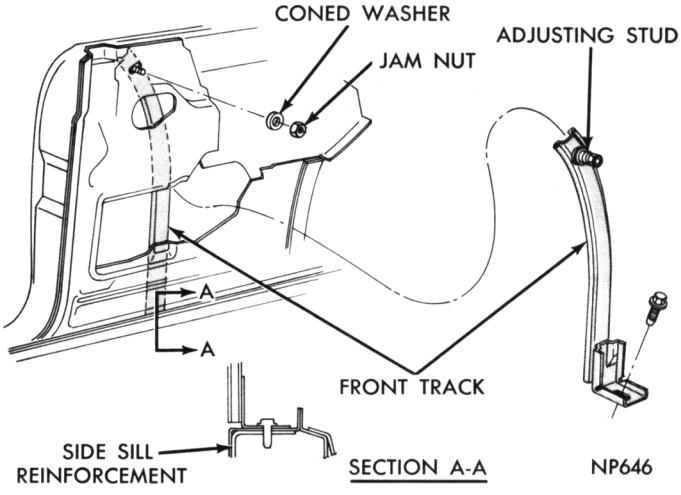

Fig. 52—Front Roller Track—Convertible

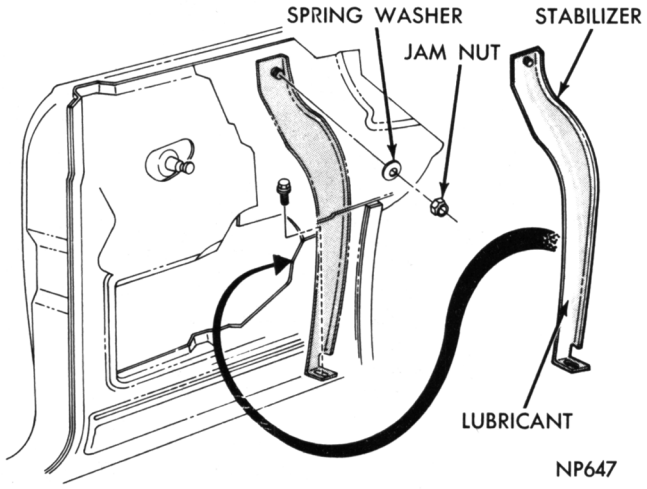

Fig. 53—Rear Stabilizer—Convertible

inner panel. The lower attachment is also adjustable for "in and out" and "fore and aft".

FASTBACK MODELS

Adjustments

(1) With door closed, position glass to half open position.

(2) Adjust upper attachment of rear guide (Fig. 54) and upper attachment of front track, outboard until glass is in design position at belt line and the outer belt weatherstrip is lightly contacted by the glass.

(3) Raise window until glass contacts roof rail weatherstrip.

(4) Adjust front track lower attachment so front of quarter window is aligned with rear of front door glass at roof rail and parallel to roof rail weatherstrip.

(5) Move regulator forward and upward until an effective seal is made with the roof rail weatherstrip and rear of front door assembly.

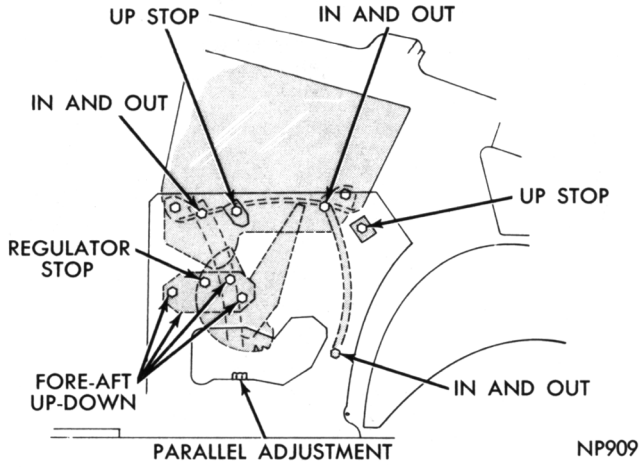

Fig. 54—Quarter Window Adjustments—Fastback

(6) Position front and rear up-stops down against stops on lower frame.

(7) Lower window until top of glass is even with quarter outside panel.

(8) Adjust lower end of rear guide sleeve nut so rear end of glass lightly touches outer belt weatherstrip.

(9) Position stop on regulator plate against stop on sector.

GLASS REPLACEMENT (Fig. 55)

Removal

(1) Support quarter glass and remove screws attaching glass to lower frame through access holes in quarter inner panel.

(2) Raise glass out of quarter panel.

(3) Remove grommets and spacers from glass.

Installation

(1) Assemble spacers and grommets to screws used to attach glass to lower frame.

(2) Make certain the lower glass frame grommets and spacers are correctly positioned on holes at points glass is installed.

(3) Adjust regulator so holes in glass lower frame are aligned with holes in inner panel.

(4) Insert glass into quarter panel aligning glass and lower frame holes.

(5) Install previously assembled attaching screws, grommets and spacers.

(6) Tighten screws securely.

Glass Lower Frame (Fig. 56)

Removal

(1) Remove quarter glass and up-stops (Fig. 57).

(2) Remove front roller track attaching sleeve nut at top end and weld stud nut at bottom.

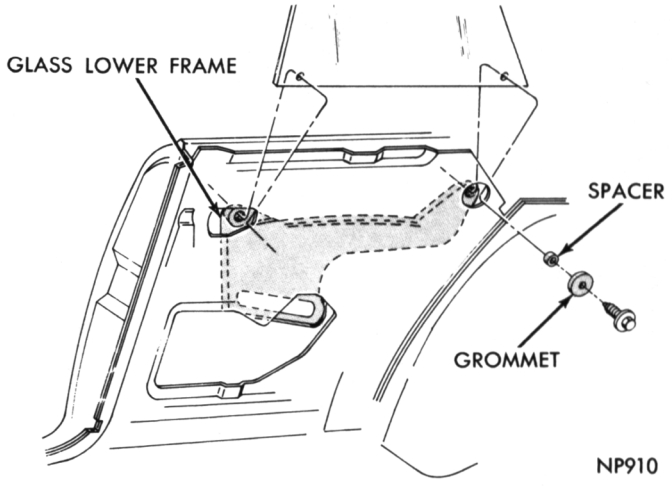

Fig. 55—Quarter Glass Replacement—Fastback

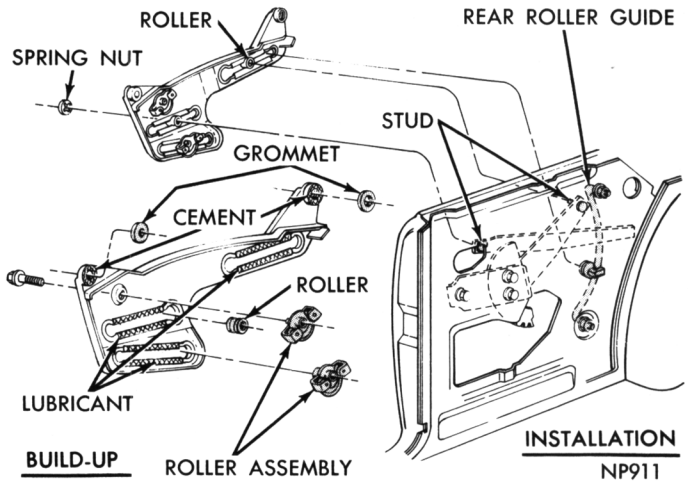

Fig. 56—Lower Frame Assembly—Fastback

(3) Slide track assembly down and off of lower frame roller assembly, out of quarter panel.

(4) Lower glass frame so regulator arm studs are accessible to remove spring nuts from studs.

(5) Remove regulator arm studs from glass lower frame.

(6) Move glass lower frame forward and up, out of quarter panel.

(7) Remove grommets roller and roller and guide bracket assemblies from lower frame (Fig. 56).

Installation

(1) Position roller and guide assembly to hole in front part of frame and install screw.

(2) Apply lubricant to roller contact surfaces of slots in lower frame.

(3) Position roller and guide assembly to lower slot in frame.

(4) Position regulator arm roller to center slot in frame.

(5) Apply cement to grommet contact surfaces at front and rear of frame and install grommets.

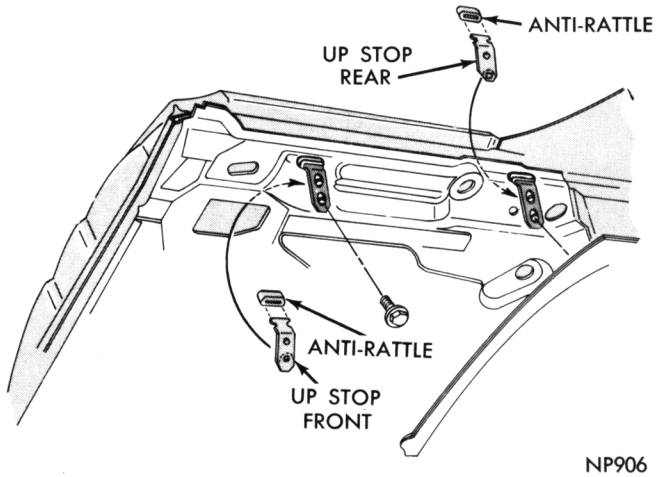

Fig. 57—Glass Up-Stops—Fastback

(6) Lower frame assembly into quarter panel.

(7) Push frame rearward and locate glass guide through rear slot access hole, sliding guide rearward in slot.

(8) Position regulator rear arm roller in rear slot and move rearward.

(9) Spring regulator arms inboard to allow studs to enter rollers.

(10) Install spring nuts on studs.

(11) Install quarter glass and up-stops.

(12) Adjust quarter window.

Front Roller Track (Fig. 58)

The front roller track is positioned at the upper end over the bottom roller and guide assembly and the upper fixed roller assembly. The sleeve nut at upper end is positioned through a hole in the inner panel and is retained by a washer and nut. The lower end of track fits over a weld stud and is retained by a nut and washer.

Rear Roller Guide (Fig. 59)

The rear roller guide is attached at the upper and lower by inserting the sleeve nuts through holes in the inner panel and installing retaining washer and nuts on the sleeve nuts. The rear guide roller assembly is positioned in the glass lower frame rear slot.

Belt Weatherstrips

Refer to Figures 60 and 61 for applications of the inner and outer belt weatherstrips.

PANEL SIDE REFLECTORS

The quarter panel side reflectors are attached to recessed areas in the panel with sealing type nuts (Figs. 62 and 63).

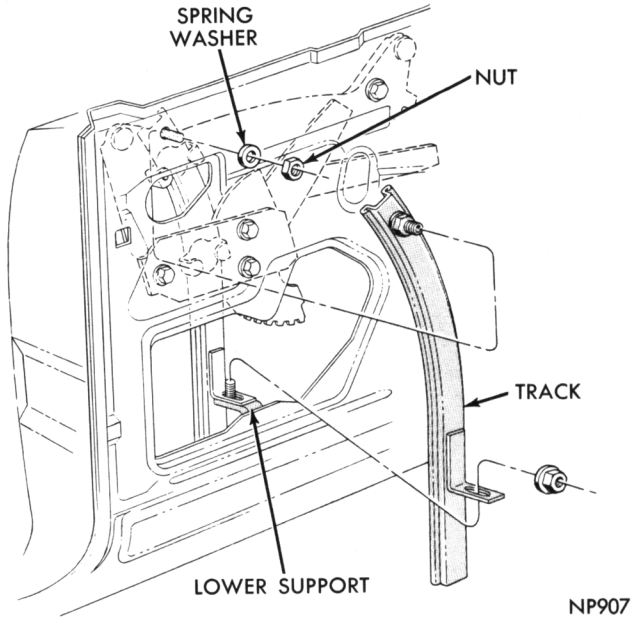

Fig. 58—Front Roller Track—Fastback

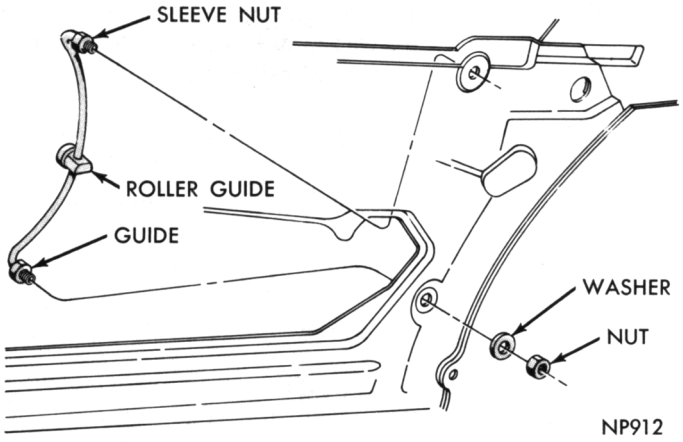

Fig. 59—Rear Roller Guide—Fastback

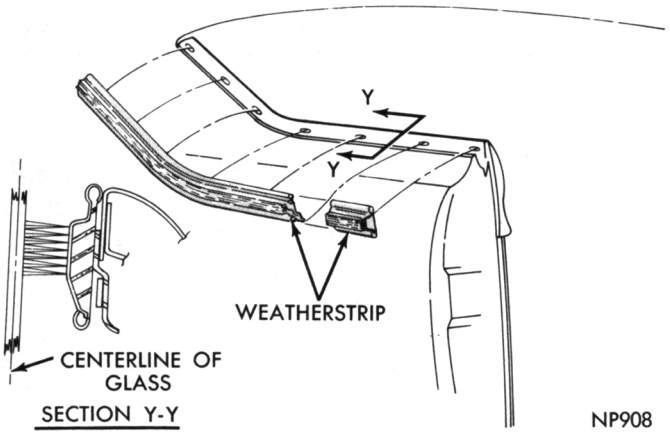

Fig. 60—Inner Belt Weatherstrips (Fastback)

DECK LID

Alignment

The deck lid hinges (Fig. 64) permit only a very slight adjustment at the deck lid to hinge attaching points.

Replacement

The deck lid is attached to the hinges by two screws on each side. An assistant's aid is recommended when replacing the deck lid to prevent it from sliding rearward and damaging the paint and also to aid in the aligning of the hinge screw holes when it is installed.

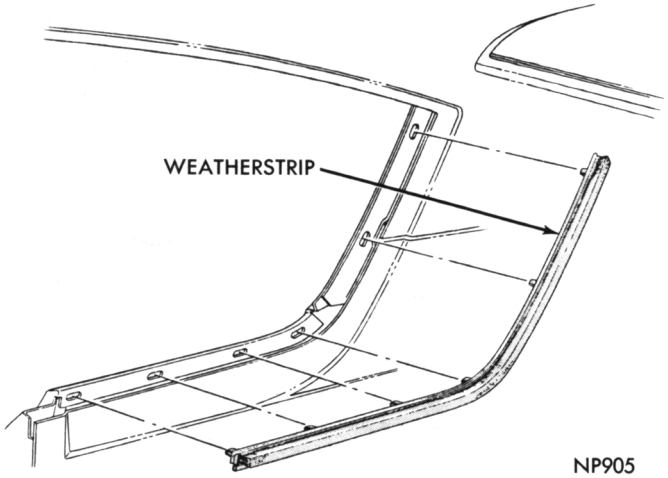

Fig. 61—Outer Belt Weatherstrips (Fastback)

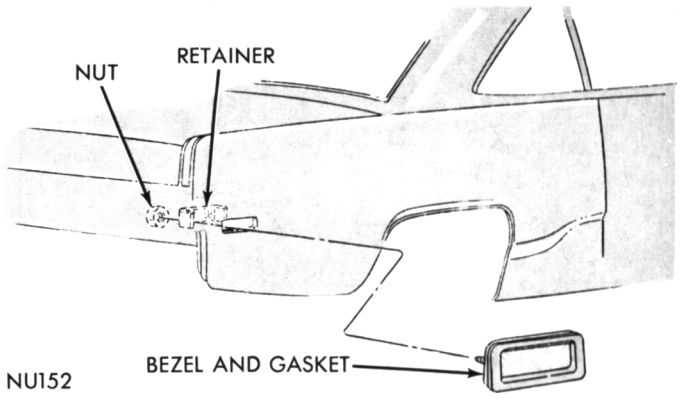

Fig. 62—Quarter Panel Side Reflector—Valiant

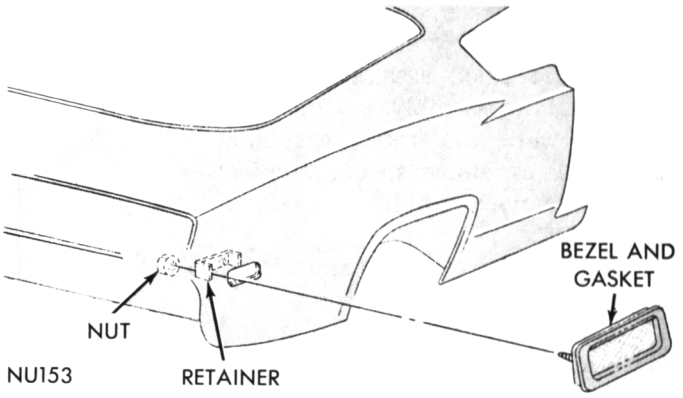

Fig. 63—Quarter Panel Side Reflector—Barracuda

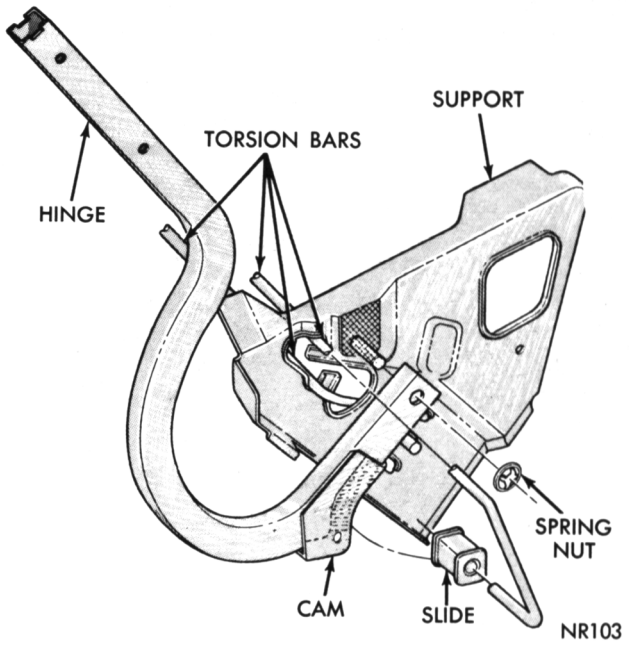

Fig. 64—Deck Lid Hinge

Hinge Replacement

Removal

(1) Remove the deck lid assembly.

(2) Disengage the torsion bar roller from hinge being removed. Use care when disengaging torsion bar as it is under a load.

(3) Remove spring nut (Fig. 64) retaining hinge to hinge bracket and remove hinge.

Installation

(1) Use a new spring nut and install hinge on hinge bracket.

(2) Install deck lid assembly and connect torsion bar.

Torsion Bar Replacement

Removal

(1) Remove torsion bar (underspring load) from adjustment slot (Fig. 64).

(2) Unwind torsion bar.

(3) Unhook torsion bar from support bracket.

(4) Push torsion bar out of roller in hinge arm and remove from hinge support

Installation

(1) Insert bar into hinge support.

(2) Insert end of torsion bar into roller in hinge arm.

(3) Hook torsion bar into support bracket.

(4) Wind torsion bar and insert end of bar into first adjusting slot.

(5) Place deck lid in various open positions and test tension of torsion bars.

(6) Adjust torsion bars progressively until deck lid stays in open position.

Lock Replacement

The deck lid lock assembly (Fig. 65) is attached to the deck lid by two screws. Scribe the location of the lock mounting flanges to aid in installation.

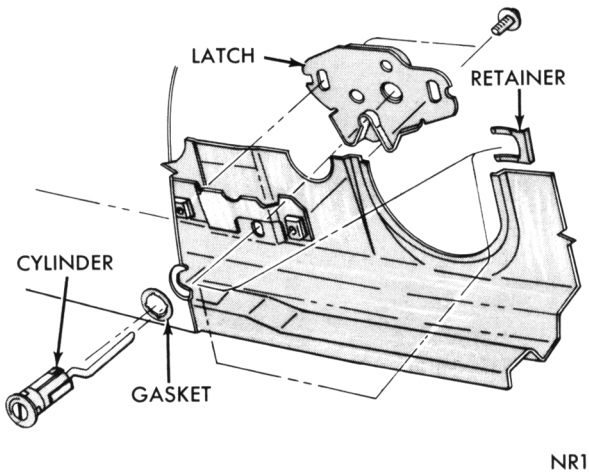

Fig. 65—Deck Lid Lock

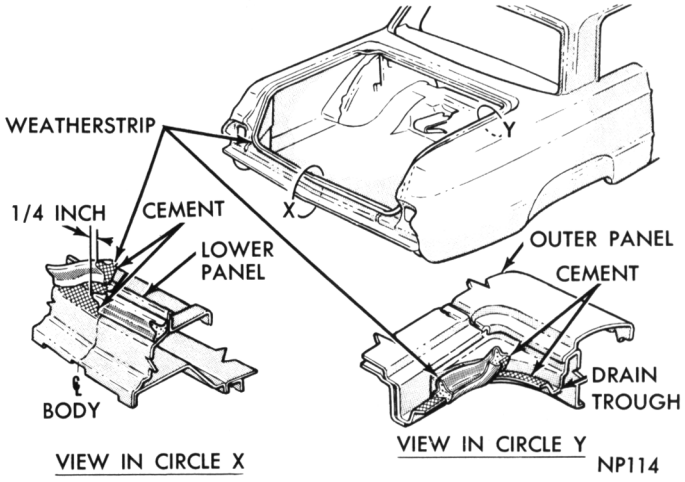

Fig. 66—Deck Lid Weatherstrip

Lock Adjustment

Vertical adjustment of the deck lid lock is made at the lock attaching screws. The side adjustment is made at the striker attaching bolts.

Lock Cylinder

The deck lid lock cylinder (Fig. 65) is retained in the body by a spring steel "U" shaped clip attached from within the body.

Weatherstrip

Apply an even continuous coat of cement to entire weatherstrip contact surface of deck lid opening (Fig. 66) and install weatherstrip. Make sure molded corners of weatherstrip are correctly positioned.

FASTBACK MODELS

Refer to Figures 67 and 68 for applications of the

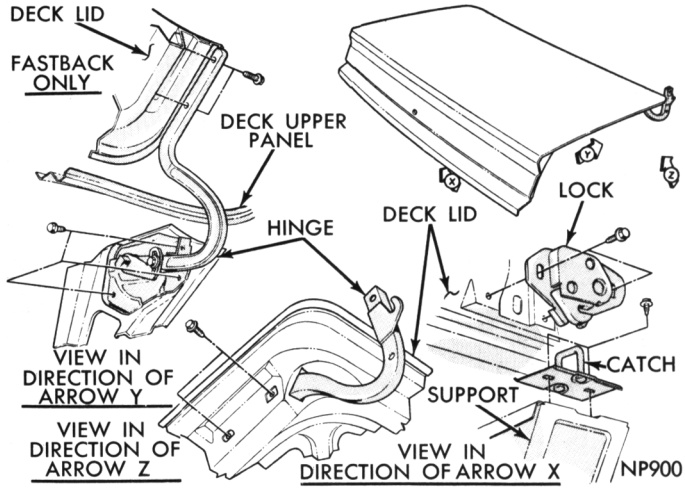

Fig. 67—Deck Lip Application

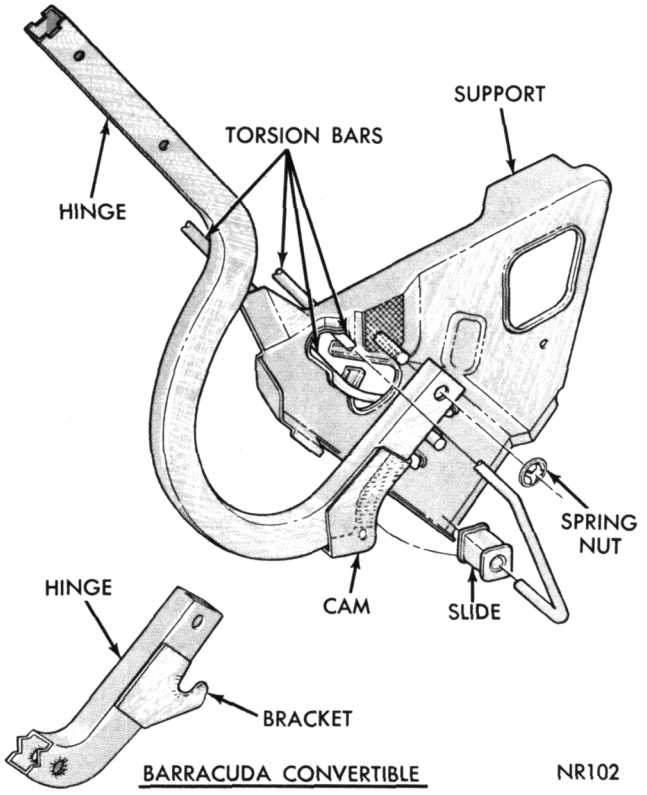

Fig. 68—Deck Lid Adjustment

deck lids. The lock and catch assembly are adjusted the same as other models.

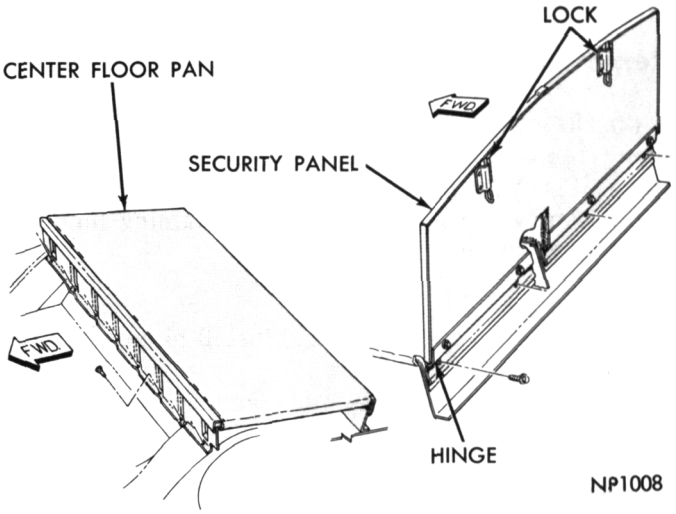

Fig. 69—Security Panel

Recoil Adjustment (Fastback)

To adjust the deck lid recoil tension on fastback models, loosen the screw at slotted area of tension arm and move the tension arm, with an open end wrench, in the desired position.

SECURITY PANEL

The security panel (Fig. 69) is attached to the center floor pan rear reinforcement with screws. Align security panel surface with center floor panel wedge to hold in position and tighten screws. Adjust locks and strikers for positive locking.

SHEET METAL—DOORS—COWL PANELS

INDEX

SATELLITE

	Page
BUMPERS	34
COWL PANELS	
Fresh Air Ducts	30
Fresh Air Inlets	29
Control Cable	
Attachment	29
Routing	29
DECK LID	
Alignment	54
Hinge	55
Lock	
Adjustment	55
Cylinder	55
Replacement	55
Vacuum Actuated	55
Replacement	55
Torsion Bars	55
Weatherstrip	56
DOORS	
Alignment	35
Arm Rests	37
Glass	
Convertible	
Adjustments—Door and Vent Wing	42
Regulators	43
Replacement	43
Run Channel	43
Hardtop	
Adjustments—Door and Vent Wing	42
Regulators	43
Replacement	43
Run Channel	43
Sedan—Front	
Adjustments—Door and Vent Wing	40
Regulators	41
Replacement	40
Run and Channel	41
Vent Wing Replacement	40
Sedan—Rear	
Adjustments	41
Regulators	42
Run Channel	42
Stationary Glass	42
Handle—Inside	
Regulators	36
Remote Control	37
Handle—Outside	
Front Door	38

	Page
Rear Door	38
Hinge	36
Lock	
Cylinder	38
Remote Control	37
Replacement	37
Replacement—Front—Rear	36
Striker and Rotor	36
Trim Panels	37
Weatherstrips—Door	39
Convertible—Door	39
Hardtop—Door	39
Outer Belt—Door	39
Roof Rail	39
Sedan—Door	39
Station Wagon—Door	39
FENDERS	
Alignment	33
Replacement	33
Side Reflector	33
FRESH AIR INLETS	
Control Cables	29
Ducts	30
GRILLE	
Alignment	34
Replacement	34
HOOD	
Alignment	31
Carburetor Fresh Air System	32
Hinge	32
Lock	31
Replacement	31
Torsion Bars	31
QUARTER PANELS	
Extension	48
Garnish Mouldings	43
Glass	
Convertible	
Adjustments	45
Regulators	46
Replacement	46
Stabilizer	47
Track—Front	47
Hardtop	
Adjustments	45
Regulators	46
Replacement	46
Track—Front—Rear	47
Sedan	
Adjustments	44
Regulators	45
Replacement	44
Run Channels	45
Station Wagon	
Replacement	47
RADIATOR YOKE SUPPORT	
Air Shield and Cross Bar	34
Replacement	33
TAIL GATE	
Alignment	48
Glass	
Adjustments	50
Regulators	51
Replacement	51
Run Channel	
Pillar and Upper	52
Retainer and Seal	52
Handles	
Regulators	49
Remote Control	49
Lock	
Cylinder	49
Linkage	49
Replacement	48
Torsion Bars	52
Trim Panels	48
Weatherstrips	
Tail Gate	52
Opening	52
Window Washer System	48

SERVICE PROCEDURES

COWL PANELS

FRESH AIR INLETS

Control Cable

On air conditioned equipped vehicles, only the left vent door is used.

Attachment

The control cables are attached to the instrument panel lower flange with screws (Fig. 1). The lower end of the cables are retained on a mounting bracket with a clip and screw (Fig. 2). The right cable "looped" end is positioned on the fresh air door control crank arm (Fig. 2). The left cable is held on the crank arm with a spring type retainer (Fig. 3).

Routing—with Heater

Route cables rearward of heater support brace, under heater control cables and defroster hoses to the instrument panel attaching points on right side of steering column (Fig. 3).

With Air Conditioning (Left door only)

Route cables behind steering column support bracket, through spot cooler duct hole in brake pedal bracket, under speedometer cable and around air conditioning outlet duct to instrument panel attachment holes on right side of steering column (Fig. 4).

Attachment

(1) At lower end of cable, remove screw and clip retaining cable on mounting bracket (Fig. 2).

(2) Push control knob in fully and rotate fresh air door control crank arm to the fully closed position.

(3) Position clip over cable and on mounting brack-

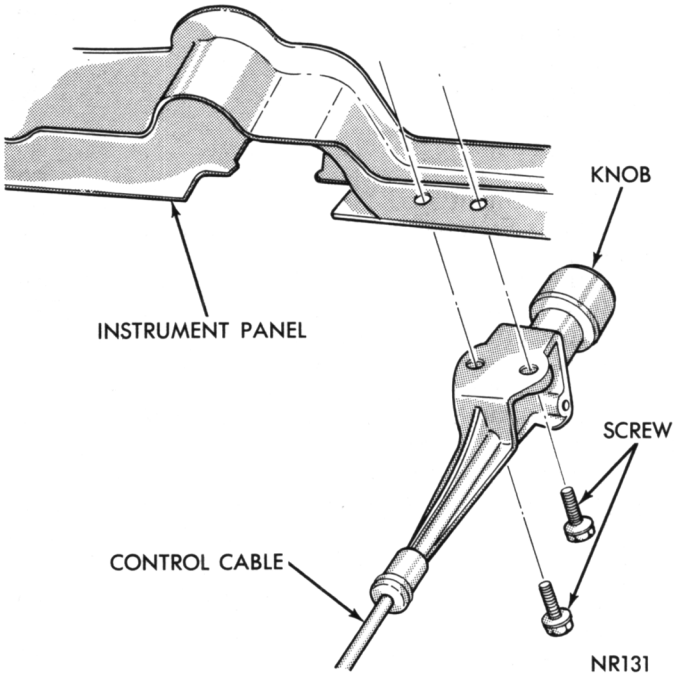

Fig. 1—Control Cable Attachment

et. Install screw, tighten securely and test cable operation.

FRESH AIR DUCTS (Fig. 5)

Vehicles equipped with a heater include the right side duct in the heater housing. Vehicles without a heater have a separate duct assembly for the right side. The left side duct assembly is the same for all models.

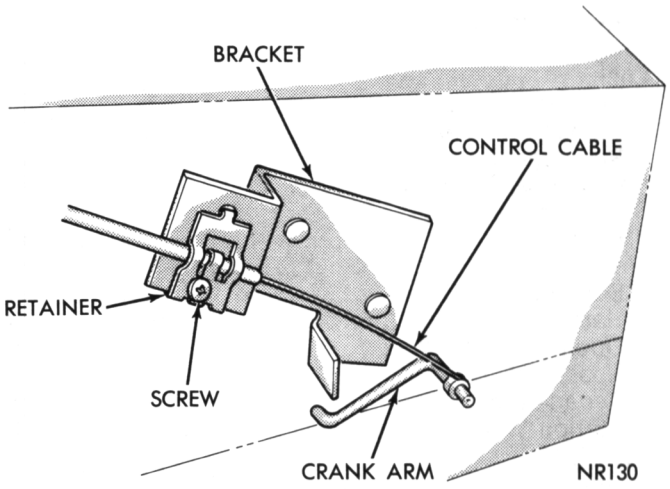

Fig. 2—Control Cable Adjustment

Without Heater

The fresh air duct assemblies are attached to the plenum opening. The right duct is retained by two hook type rods positioned over the plenum opening flange and held to brackets on the base of the duct with screws (Fig. 5).

The left duct assembly is attached directly to the plenum by positioning the duct over the plenum weld studs and securing with nuts.

With Heater

The right duct, part of the heater housing, is attached to the plenum with a single hook type rod positioned over the plenum flange and secured to the duct base with a screw (Fig. 5).

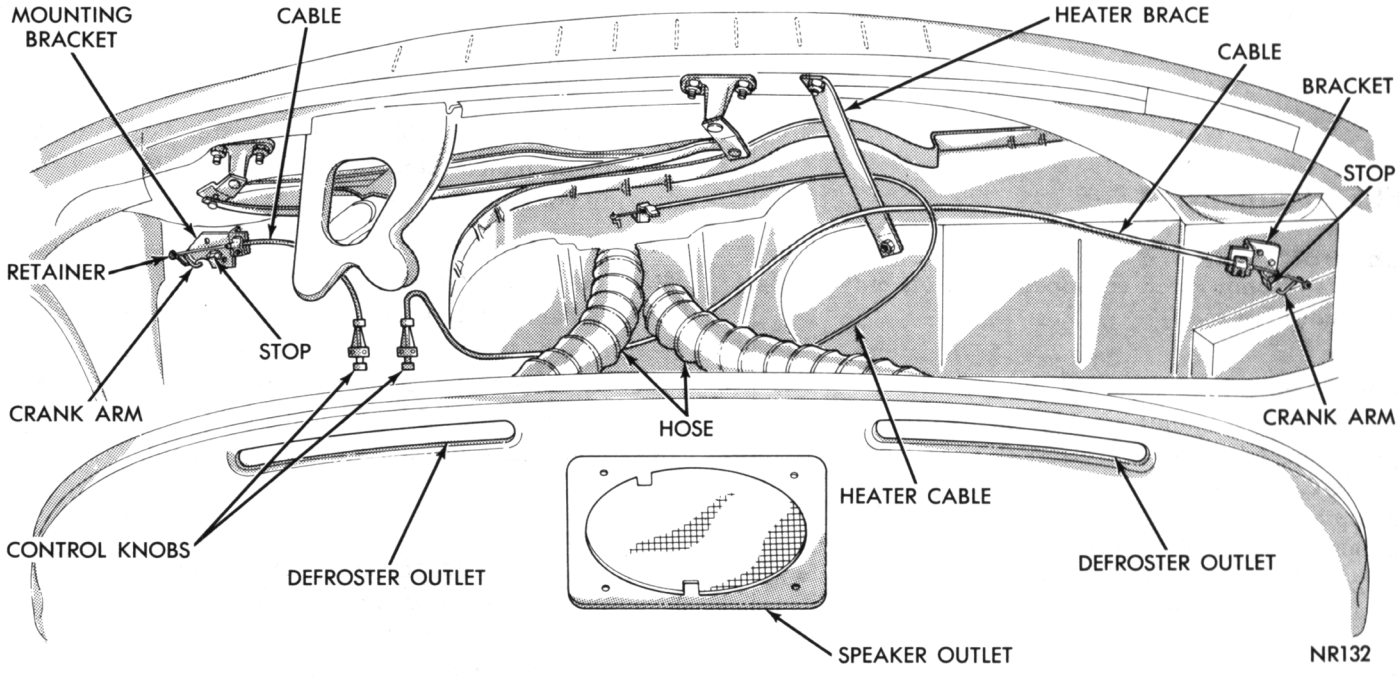

Fig. 3—Control Cable Routing with Heater

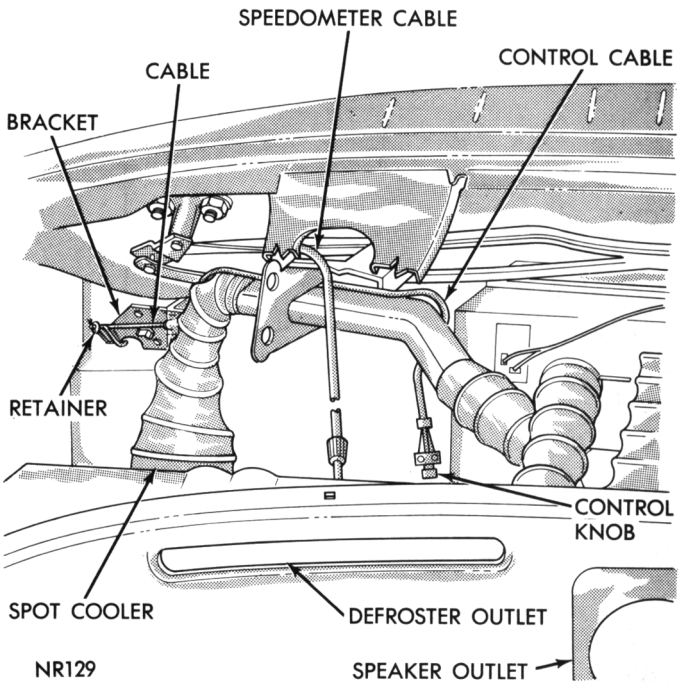

Fig. 4—Cable Routing with Air Conditioning

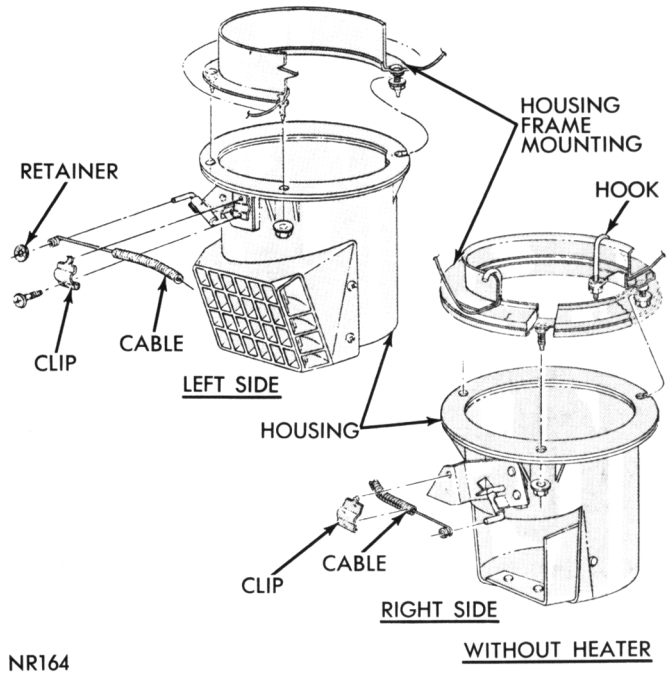

Fig. 5—Fresh Air Duct

HOOD

ALIGNMENT

Prior to making any hood adjustment, inspect clearances and alignment of hood sides in relation to cowl, fenders and grille. The cowl adjustment must be made first.

REPLACEMENT

Removal

(1) Place a protective covering over cowl and fender area.

(2) Mark outline of hinges on hood to aid in installation.

(3) With an assistant, remove hinge-to-hood attaching bolts and remove hood assembly. Use extreme care not to permit hood to slide rearward and damage painted surfaces of the cowl and fender areas.

Installation

(1) With an assistant, position hood on hinges and install hinge to hood bolts. Do not tighten.

(2) Align scribe markings on hood with hinge and tighten screws lightly.

(3) Close hood and inspect hood alignment.

(4) Adjust the alignment (Figs. 6 and 7) as necessary and tighten the hood to hinge bolts 180 inch-pounds.

(5) Remove protective covering from cowl and fender area.

LOCK

To adjust the lock (Fig. 8) loosen the attaching screws and raise or lower until the correct adjustment has been obtained. After making any adjustment that requires a shifting of the hood, always inspect the hood striker and the lock plate assembly for alignment.

TORSION BAR REPLACEMENT

(1) Disengage the torsion bar roller from its seat on hood hinge by forcing the roller end of bar to the rear and raising hood fully.

(2) Disengage left hand torsion bar roller from hood hinge.

(3) Remove hood assembly.

(4) Remove torsion bars from center support and remove bars from end reinforcements.

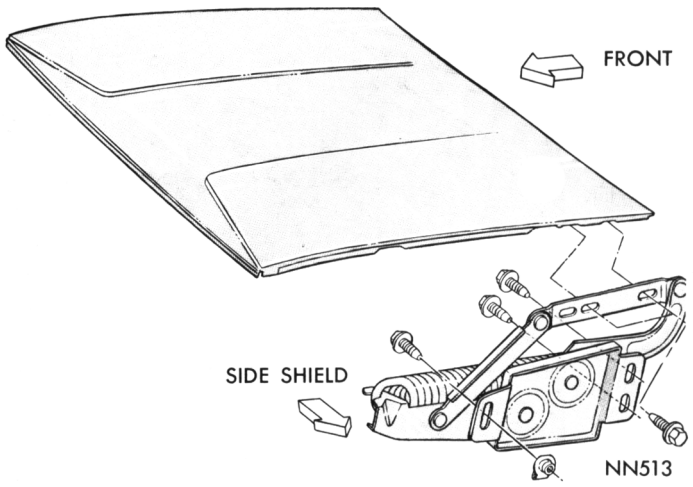

Fig. 6—Hood Adjustment

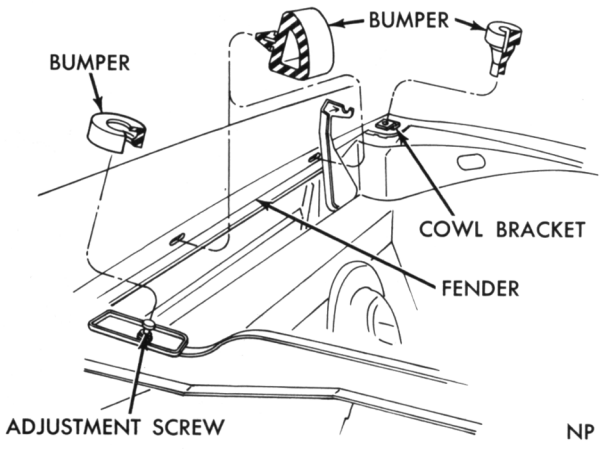

Fig. 7—Hood Leveling Adjustment

(5) Lubricate torsion bar rollers and install on hinges.

(6) Install hood assembly and adjust alignment.

HINGE REPLACEMENT

The hood hinge (Fig. 6) is attached to the hood by two screws and to the fender splash shield by three screws. Prior to removing the hinge mounting screws, prop the hood into the wide opening position. The prop should be positioned so the hood cannot move rearward.

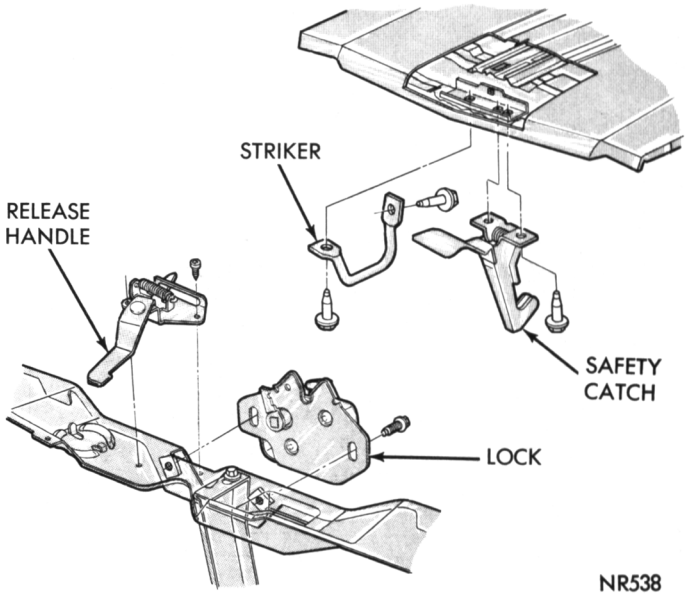

Fig. 8—Hood Lock and Striker

CARBURETOR FRESH AIR SYSTEM

Attachment

The carburetor fresh air system (Fig. 9) is available on Road Runner and GTX models equipped with Hemi or 440 cubic inch engines. The component parts of the system are attached to the bottom side of the hood with screws and "pop-rivets." A single cable attaches the right and left outer air intake duct door

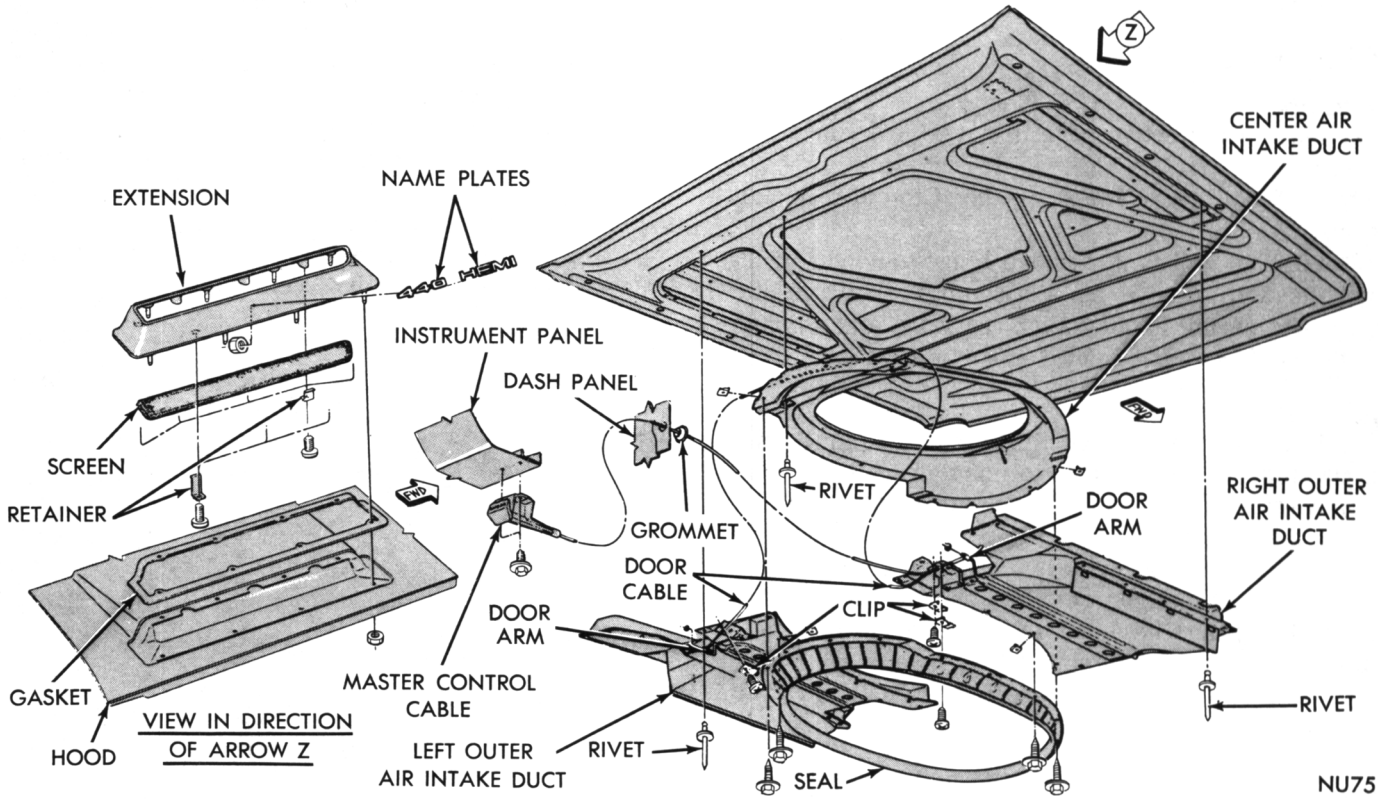

Fig. 9—Carburetor Fresh Air System

actuator arms. The doors are controlled through the use of a single master control cable attached to the lower reinforced portion of the instrument panel. The cable looped end is positioned over the right outer duct door actuator arm. The cables are retained on the actuator arms with spring type retainers.

The outer ducts are each serviced as an assembly only. The center air scoop, lower seal, door cable and master control cable are serviced separately.

Air Scoop

The hood air scoop (Fig. 9) is attached to the hood with nuts. A gasket and filter screen is positioned between the air scoop and hood. The air scoop, screen and gasket are serviced separately.

Cable Adjustment

The cable connecting the duct doors and the master control cable are adjusted in the same manner.

With the duct doors closed loosen the cable housing clip screws (Fig. 9). Pull out all cable slack from the cable attaching the duct doors and the master control cable at the right duct door. Tighten screws and test cable and door operation.

FENDERS

ALIGNMENT

The fender should be adjusted to provide for equal spacing at the cowl, door front edge and door panel top edge. Alignment should be made at bottom of floor sill panel, front of hood and door outer panel upper edge.

REPLACEMENT

Removal

(1) Disconnect battery ground strap.

(2) Tape leading edge of front door and cowl to fender area to avoid damaging paint.

(3) Remove front bumper assembly.

(4) Disconnect head lamp wires and remove nuts attaching grille extension to fender.

(5) Remove nuts and screws attaching fender to cowl, floor sill, wheelhouse or splash shields and radiator yoke (Fig. 10).

(6) Remove fender assembly and if necessary remove fender mouldings, ornamentation and head light assemblies.

Installation

(1) Install head lamps, mouldings and ornamentation if removed.

(2) Carefully position fender on studs at cowl side area and align fender with mounting holes in radiator yoke. Install all mounting screws and retainer nuts.

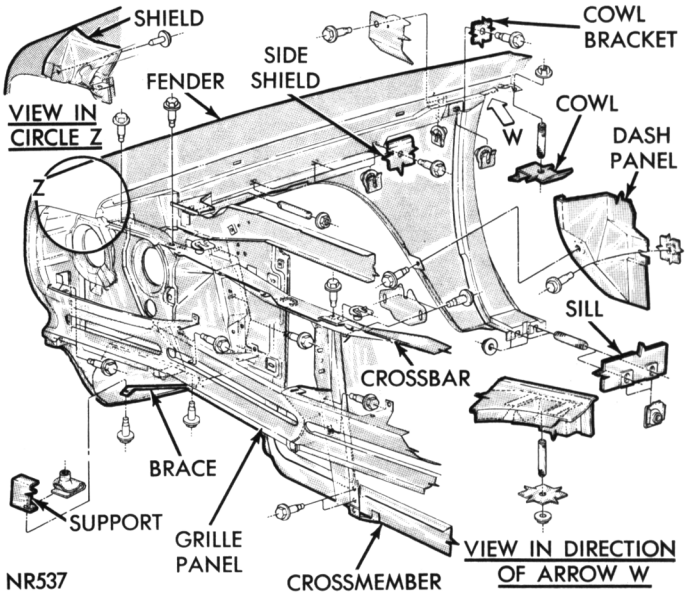

Fig. 10—Fender Attachment

(3) With fender correctly positioned, tighten all screws and nuts securely making certain fender is aligned at cowl and hood areas.

(4) Connect head lamp wires and install grille to fender nuts. Connect the battery ground strap.

SIDE REFLECTOR

The fender side reflector and bezel assembly is retained in a recessed area of the fender with sealing type nuts (Fig. 11).

RADIATOR YOKE SUPPORT

REPLACEMENT

Removal

(1) Drain radiator and remove hoses from radiator.

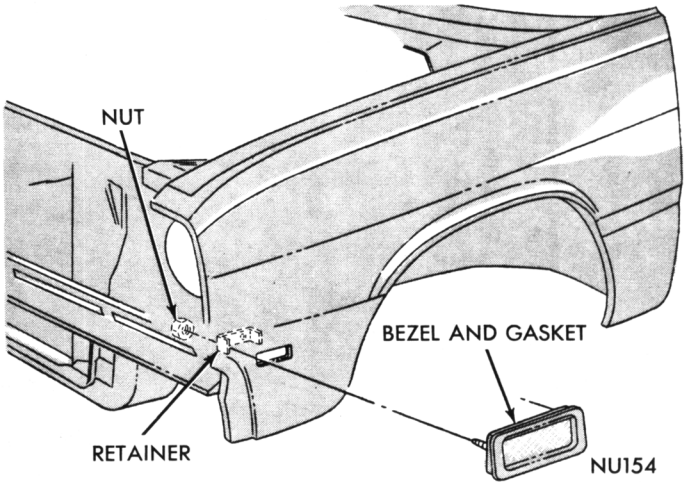

Fig. 11—Fender Side Reflector

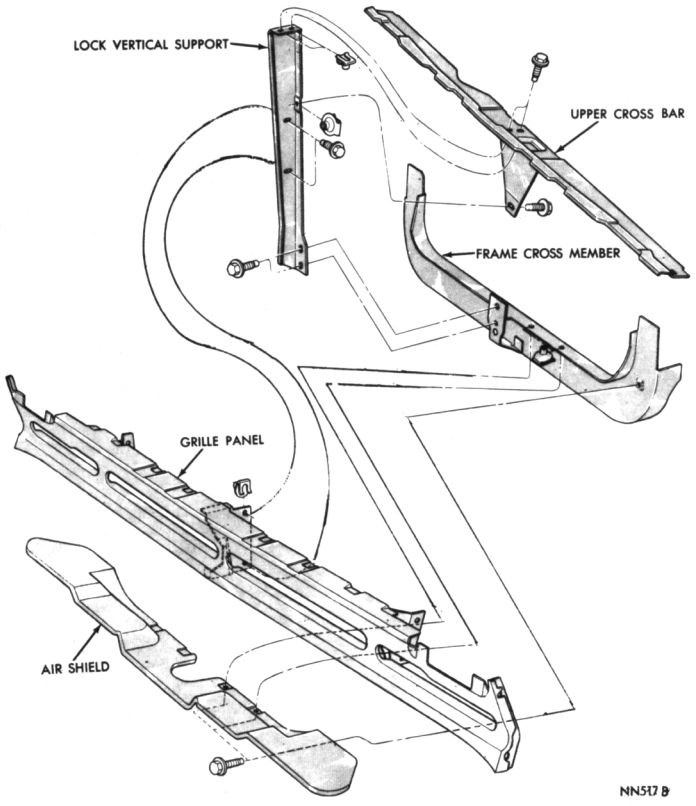

Fig. 12—Air Shield and Cross Bar

(2) Remove radiator attaching screws and radiator.

(3) Remove hood lock striker bar, horn and headlamp wiring from yoke support.

(4) From under the fenders remove the wheelhouse to yoke support attaching screws.

(5) Remove support to frame attaching screws and remove radiator yoke support from engine compartment.

Installation

(1) Position yoke support into the engine compartment. Install the frame to yoke support screws finger tight.

(2) From under the fenders, install splash shield to yoke support screws finger tight only.

(3) When all attaching screws have been installed, tighten progressively.

(4) Attach the horn and lamp wires to the yoke support with the plastic straps.

(5) Install radiator, hoses, fill cooling system and inspect for leaks.

AIR SHIELD AND CROSS BAR

Refer to (Fig. 12) for air shield and cross bar attaching points.

BUMPERS

ATTACHMENT

Refer to (Fig. 13) for bumper attaching points.

GRILLE

ALIGNMENT AND REPLACEMENT

Refer to (Figs. 14 and 15) for grille attaching points. The grille must be held against the front face of the fenders at the outer edges to avoid stressing or fracturing the grille.

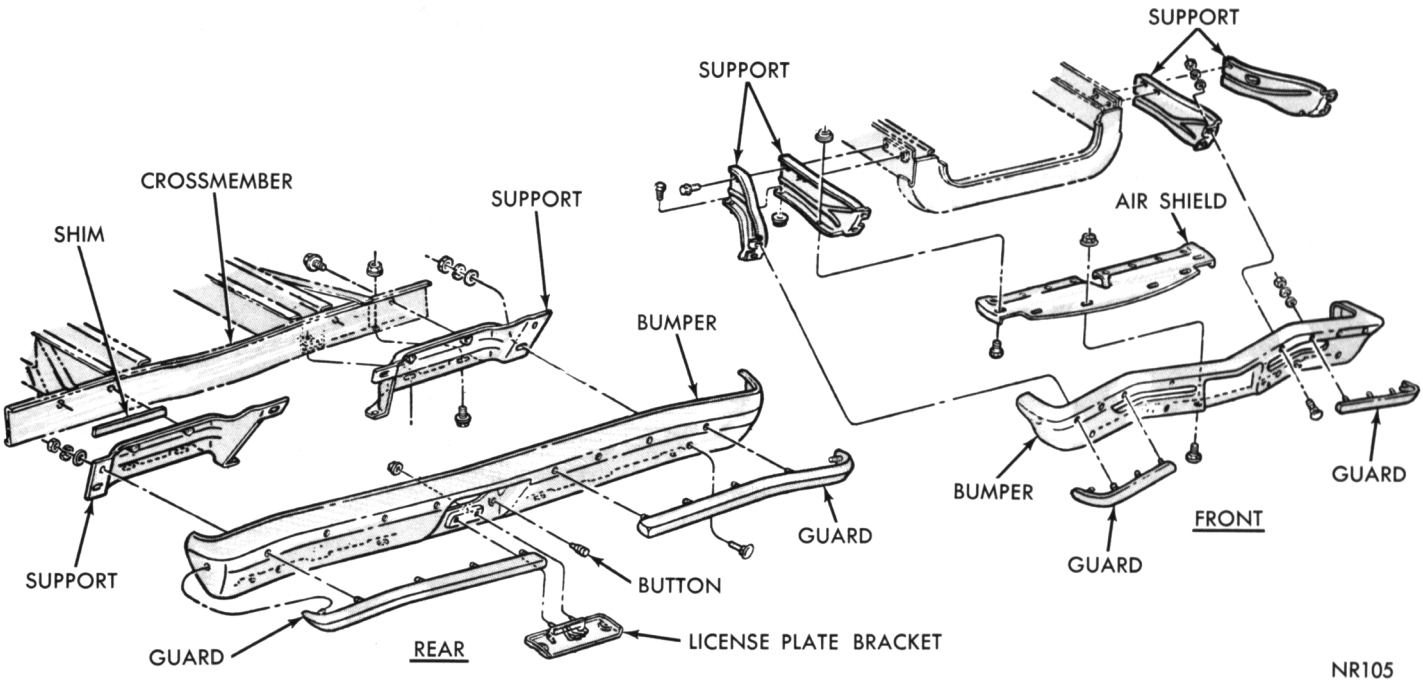

Fig. 13—Bumper Attaching Points

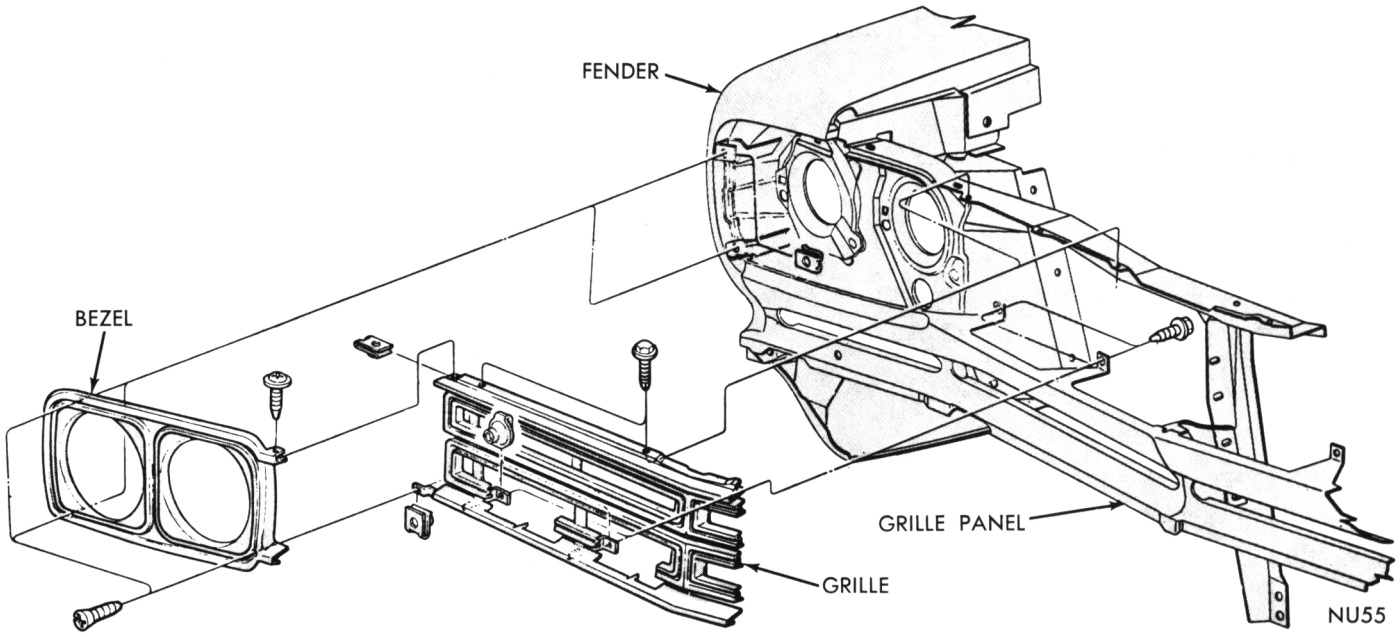

Fig. 14—Grille Attachment—Belvedere

DOORS

The service procedures for internal door components do not include obvious operations, such as removing door or quarter panel trim panels, testing operation of windows or inspecting glass fit after adjustments or replacement have been performed.

ALIGNMENT

Up and Down

Adjustment of the door can be made at either the pillar or door hinge halfs (Fig. 16).

Fore and Aft

Adjustment is made at the door hinge half. **Adjust only one hinge at a time.** Raising outer end of door moves upper part of door forward, when in closed position. Lowering lower part of door moves lower part forward, when in closed position.

In and Out

Adjustment is made at the pillar hinge half. **Adjust only one hinge at a time.** Raising outer end of door,

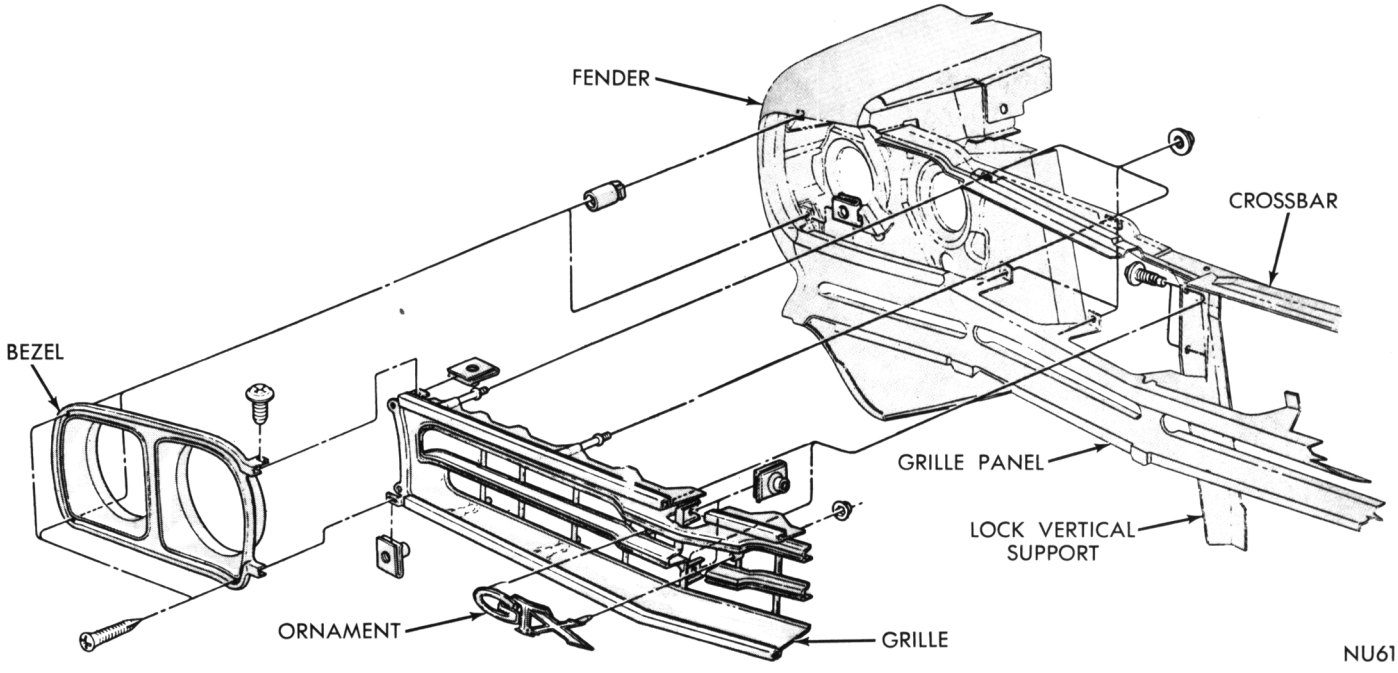

Fig. 15—Grille Attachment—Satellite—GTX

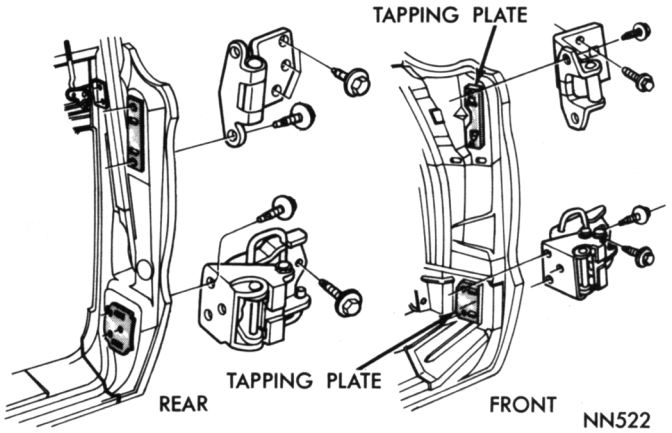

Fig. 16—Door Hinge Attachment

moves upper part of door into door opening. Lowering outer end of door, moves lower part of door into door opening.

STRIKER AND ROTOR

The door strikers (Fig. 17) are attached to the pillars. Oversize holes permit up and down and in and out movement. Fore and aft adjustment is made by adding or removing shims between the striker and post. The striker plate should be adjusted to lift the door slightly.

DOOR REPLACEMENT

Front Door (All Models)

Removal

On vehicles with electric windows, disconnect the wires from window regulator motor and remove from door assembly.

(1) With door in wide open position, place a jack, with a block of wood or pad on lifting plate of jack, as near hinge as possible. (This will hold weight of door as hinge bolts are loosened.)

(2) Remove door interior trim and hardware.

(3) Scribe a line around upper and lower hinge plates on door panel.

(4) Remove hinge attaching screws from door and remove door for further disassembly if necessary.

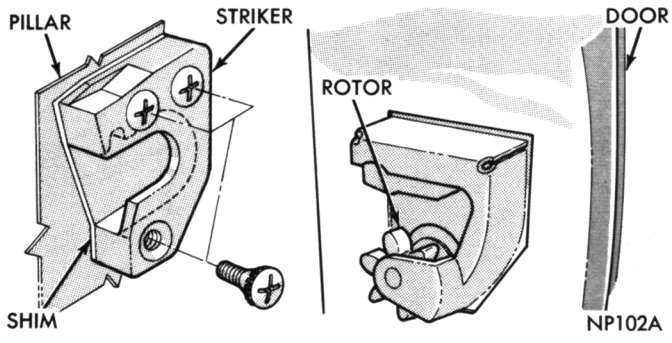

Fig. 17—Striker and Rotor

Installation

(1) With door inner hardware installed, place door in position in door opening, supported by a padded jack.

On electric window lifts, install wiring in doors and attach to motor and control switch.

(2) Locate door hinge plates on door panel and install hinge attaching screws finger tight only.

(3) Adjust jack to align hinge plate scribe marks and tighten attaching screws.

(4) Complete door aligning procedure, and install door interior trim and hardware.

REAR DOOR (All Models)

Removal

On vehicles with electric window lifts disconnect wires from motor and control switch and remove from door prior to door removal.

(1) Open rear door and place a padded jack under door near the hinges.

(2) Remove door interior trim and hardware.

(3) Scribe aligning marks around hinge plates on door frame.

(4) Remove hinge attaching screws from door and remove door from body.

Installation

(1) With rear door inner hardware installed, support door on a padded jack and position door on hinges.

(2) Install attaching bolts finger tight.

(3) Align hinges with scribe marks.

(4) Tighten attaching screws and test door for alignment.

(5) Install door interior trim and hardware.

On vehicles with electric window lift, insert wiring into the door and attach wiring to motor and control switch prior to installation of trim panel.

HINGE REPLACEMENT

The door hinges (Fig. 16) are attached to the doors by screws accessible from outside. The front door hinges are each attached to the "A" post by three screws.

The rear door upper hinges (on hardtop and station wagon models), are attached to the "B" post by three screws accessible from outside. On sedan models, the screws are accessible through an access hole in the "B" post.

INSIDE HANDLES

Window Regulator Handle

The window regulator handles are retained on the shaft with an allen set screw. The handles should be

positioned on the shaft approximately in a horizontal position with the knobs facing rearward.

Remote Control Handle

The remote control handle (Fig. 18) is attached to the control unit with a screw at the rear inner end.

ARM RESTS

The arm rests are retained by two metal screws inserted at the bottom of the arm rest base. The pad and base can be separated and if necessary, the pad may be recovered.

TRIM PANELS

Door Trim Panel Replacement

(1) Remove inside handles and arm rests.

(2) Remove screws attaching trim panel to door inner panel.

(3) Insert a wide blade screw driver between trim panel and door frame next to retaining clips and snap retaining clips out of door panel. Remove trim panel.

(4) Before installing door trim panel, inspect condition of watershield.

(5) Be certain the escutcheon spring is placed on the regulator shafts.

(6) Align trim panel retaining clips with holes of door frame and bump into place with heel of hand.

(7) Install trim panel to door screws.

(8) Install escutcheon washer, handles and arm rest.

LOCK ASSEMBLY

Remote Control (Manual)

Removal

(1) Raise door glass.

(2) Remove screws attaching remote control base to door panel (Figs. 19 and 20).

(3) Remove link from remote control lever.

(4) Remove control through large opening in door.

Installation

(1) When installing the remote control assembly, coat parts with lubriplate.

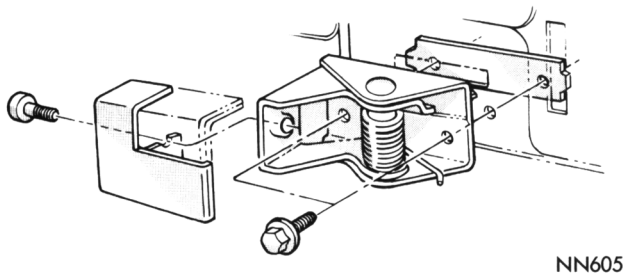

Fig. 18—Remote Control Handle

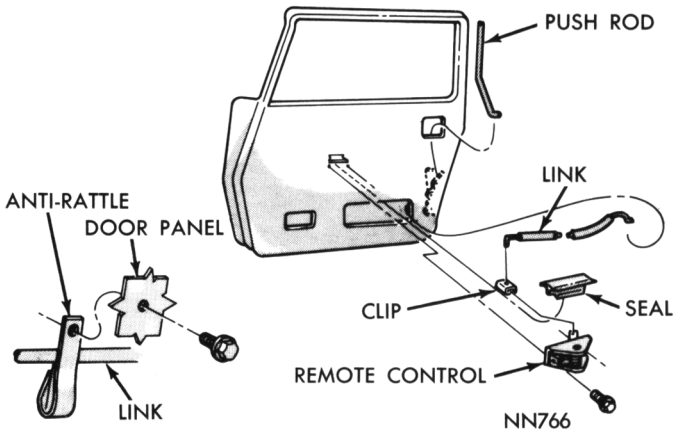

Fig. 19—Front Door Locking Mechanism

(2) Install assembly through door opening and connect link to the control lever.

(3) Install attaching screw and test operation of control.

LOCK REPLACEMENT

Removal

(1) Disconnect handle to lock link (Figs. 19 and 20) from lock by pulling link outward at lock.

(2) Disconnect locking lever rod (front door only) from lock assembly (Fig. 19).

(3) Disconnect lock control rod from lock assembly (Fig. 21).

(4) Remove screws attaching lock assembly to door.

(5) Rotate lock assembly and disconnect remote control link when removing lock.

(6) Lubricate all moving points of lock assembly.

Installation

(1) Position lock assembly in door and connect remote control link to lock lever.

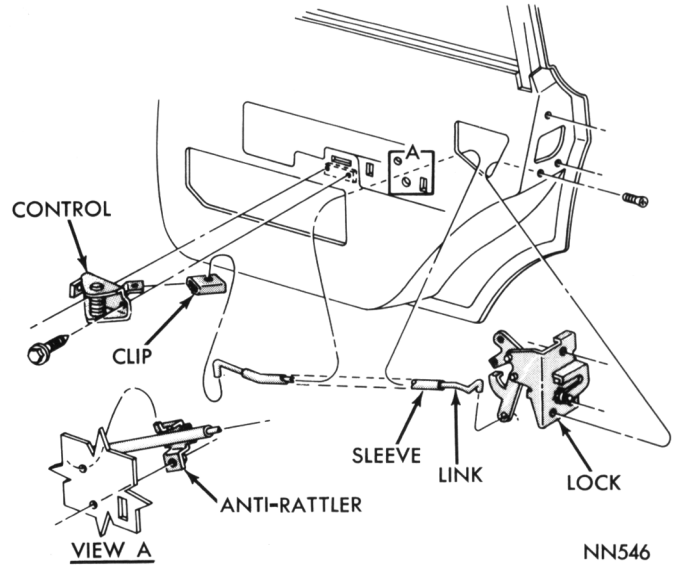

Fig. 20—Rear Door Locking Mechanism

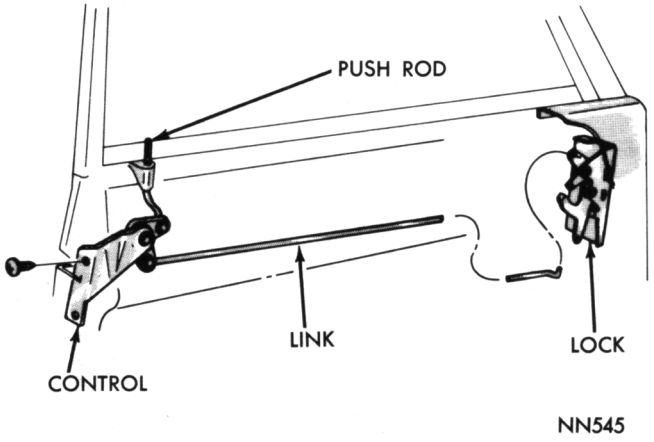

Fig. 21—Rear Door Locking Control

(2) Install lock retaining screws.
(3) Connect handle to lock link.
(4) Connect locking lever rod (front door only) to lock assembly.
(5) Connect locking lever rod and remote control link to lock.

LOCK CYLINDER

Removal

(1) With window in the up position, disconnect cylinder link (Fig. 22) from clip on lock lever **(4 door only)** and from cylinder.
(2) On **2 door models** disconnect lock link from clip on lock lever, remove link control bracket mounting screws and remove cylinder link from cylinder.
(3) Romove retainer from cylinder body and cylinder from door.

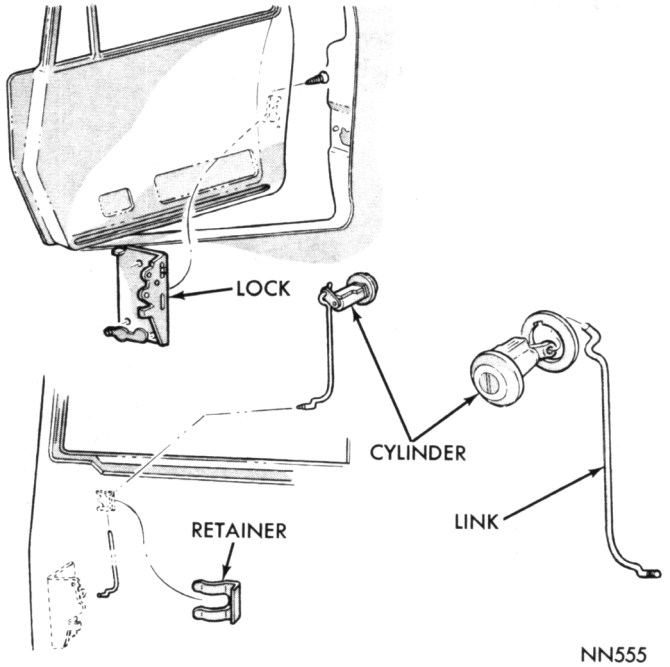

Fig. 22—Lock Cylinder

Installation

(1) Position cylinder in door and install retainer on cylinder body.
(2) Connect the cylinder link to cylinder arm and to clip on lock lever **(4 door models).**
(3) On **2 door models** connect cylinder link to cylinder, position link bracket on door face and install attaching screws. Connect lock link to lock.

OUTSIDE HANDLE—FRONT DOOR

Removal

(1) With door glass in up position, remove door handle attaching nuts from mounting studs (Fig. 23) and link from handle to lock.
(2) Lift handle up and remove from door.

Installation

(1) Install handle into door opening. Engage link from handle to lock.
(2) Attach retaining nuts and test operation of the handle.

REAR DOOR

Removal

(1) With door open and glass in up position remove retainer from link at handle connector.
(2) Depress outside handle release button and remove link from handle connector.
(3) Remove nuts attaching handle to door and remove handle.

Installation

(1) Position handle in door and install mounting nuts.
(2) Depress handle button and position link over connector on handle.
(3) Install retainer over link and connector.

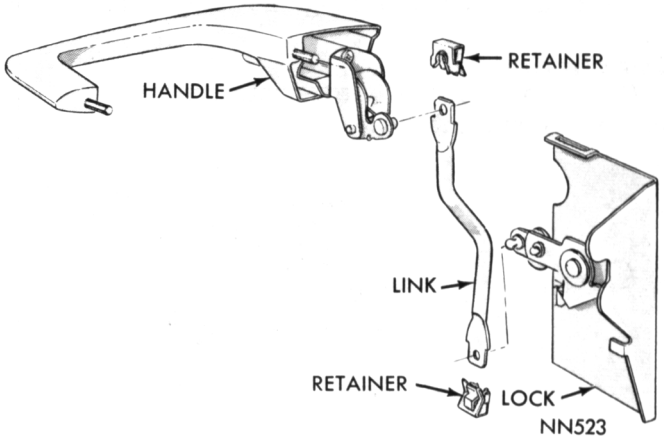

Fig. 23—Front Door Handle

WEATHERSTRIPS AND WINDCORDS

Door Weatherstrips

Make sure all old weatherstrip particles and cement are removed before installing new weatherstrip.

Sedan and Station Wagon Models

(1) Apply lower half of weatherstrip, starting at hinge face at belt line, working fasteners into holes in shut face of doors.

(2) Apply a 1/8 inch bead of cement to weatherstrip seating area on door upper and lower areas.

(3) Install upper half of weatherstrip on door, indexing at the upper corners.

(4) Work weatherstrip from index points to a point midway between them. **Avoid puckering or stretching of weatherstrip.**

Hardtop—Convertible Models

(1) Apply a coat of cement to weatherstrip contact area on vent wing, door inner and outer panels at belt line and to contact surface of weatherstrip.

(2) Position pillar seal on weatherstrip, making sure lip of weatherstrip dove tails into groove of seal and install screws.

(3) Install weatherstrip on door, indexing at top of door at belt line with two fasteners.

Roof Rail Weatherstrip

Refer to Figure 24 for the attaching points and methods of cementing.

The weatherstrip retainers are adjustable through the use of elongated attaching holes. The weatherstrip can be moved in or out for the best possible fit and seal along the top edge of the vent frame, door glass and quarter glass.

The glass up-stop must be adjusted so the fully raised glass just curls the outer lip of weatherstrip against the inner lip.

When the up-stop, roof rail weatherstrip and glass are properly adjusted, the outer lip of weatherstrip will seal along the top edge of the glass and the inner lip of weatherstrip will seal along the upper inside edge of glass.

Outer Belt Weatherstrip

The door outer belt weatherstrips are retained in the door panel with spring type retainers.

Windcords

Refer to Figure 25 for the starting points and method of attachment for the windcords.

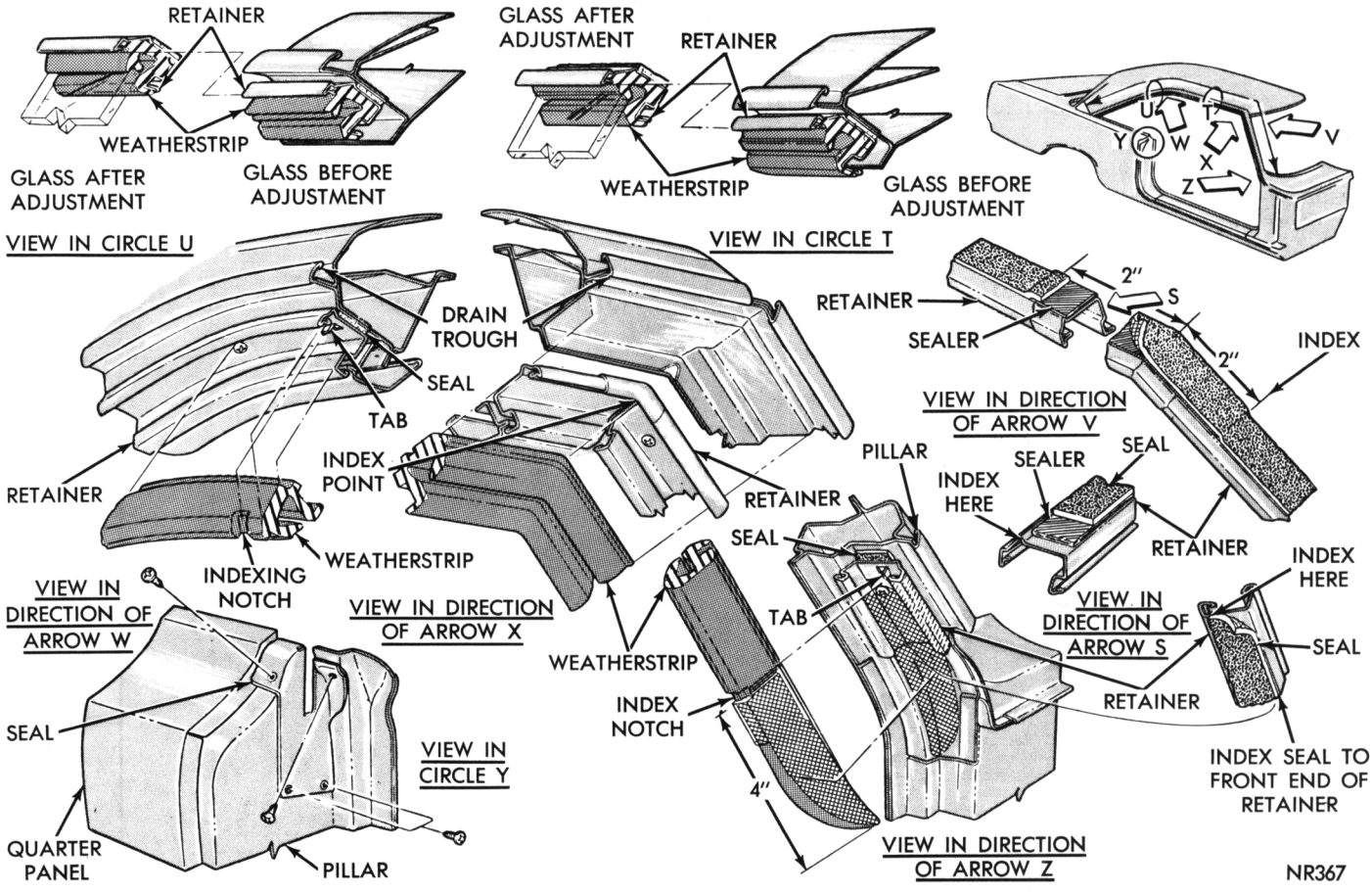

Fig. 24—Roof Rail Weatherstrip

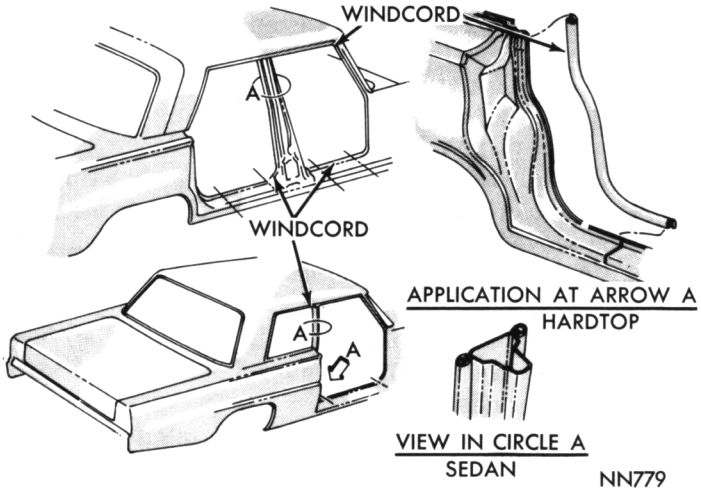

Fig. 25—Windcords

GLASS—SEDAN MODELS

FRONT DOOR

Adjustments

Door Glass and Vent Wing (Fig. 26)

(1) Open door and lower window so glass top is even or slightly below belt line.

(2) Move rear run retainer against rear edge of glass and tighten nut.

(3) Position regulator stop against regulator sector stop and tighten nut.

Vent Wing Replacement

Removal

(1) Remove attaching screws from vent frame at door front facing.

(2) With door glass in down position, remove division channel support screw at lower end (Fig. 26).

(3) Move division channel off of glass edge.

(4) Disconnect the outer belt weatherstrip for a short distance to provide clearance for the vent wing division channel.

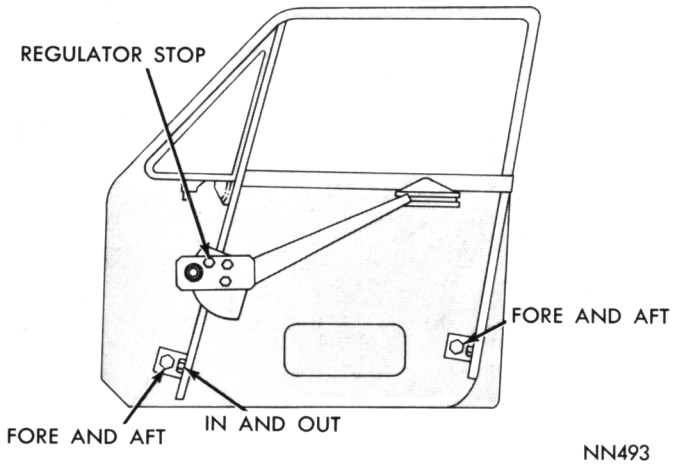

Fig. 26—Front Door Glass Adjustments—Sedan

(5) Pull top of vent frame toward rear of door and pull assembly out of door.

Installation

(1) Tilt top of vent wing toward rear of door and lower assembly into door.

(2) Move vent frame channel over glass and position channel on lower support.

(3) Install attaching screw. **Do not tighten.**

(4) Install screws attaching vent frame to door facing.

(5) Install loosened portion of outer belt weatherstrip.

(6) Adjust vent wing and door glass.

Door Glass Replacement

Removal

(1) Loosen front run channel lower mounting screw (Fig. 26).

(2) Move run channel forward and slide glass out of channel (Fig. 27).

(3) Remove regulator arm from lift bracket channel.

(4) Remove glass from door.

(5) Push plug out of lift bracket rivet.

(6) Pinch expandable ends of rivet together and push rivet out of glass.

Installation

(1) Position lift bracket and gasket on glass and install rivet and plug.

Before installing glass, lubricate regulator slide channel.

(2) Position glass into door.

(3) Position regulator arm roller into lift bracket.

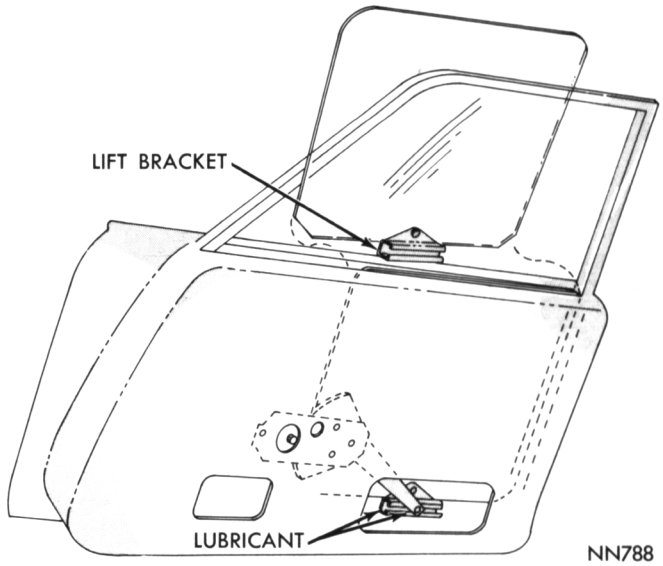

Fig. 27—Glass Replacement

(4) Position glass into glass run channels and adjust door glass.

Regulator Replacement

The regulator assemblies are attached to the door inner panels by screw and washer assemblies (Fig. 28). When removing a regulator, the door glass should be fully lowered. Slide the regulator rearward to disengage it from the lift bracket and guide assembly. Lubricate the tooth area of the regulator when reinstalling.

Electric Regulator Motor Replacement

Whenever it is necessary to remove the motor from regulator, it is imperative the linkage by clamped in a vise to lock it in place. Failure to do this allows the assist spring to drive the mounting bracket around the lift pivot.

Tests

Refer to the Electrical Section for tests and wiring diagrams.

Glass Run and Channel

The glass run (Fig. 29) is a press fit in the door frame and lower run channel. The index notch at the door upper corner should be positioned first to assure correct installation of the run. The lower run channel is positioned over the window opening frame from inside the door through the large access opening.

REAR DOORS

SEDAN MODELS

Adjustments

(1) Loosen the division channel lower bracket screw (Fig. 30) and lower window half way.

(2) Tighten division channel lower bracket screw.

(3) Lower window so top of glass is even with or slightly below belt line of outer panel.

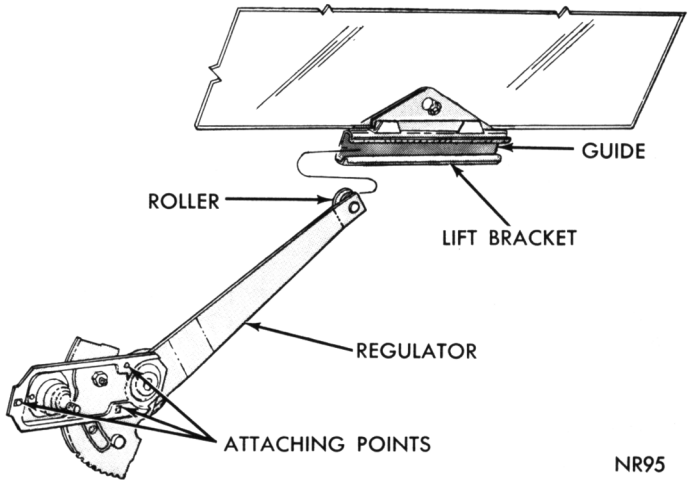

Fig. 28—Regulator Assembly

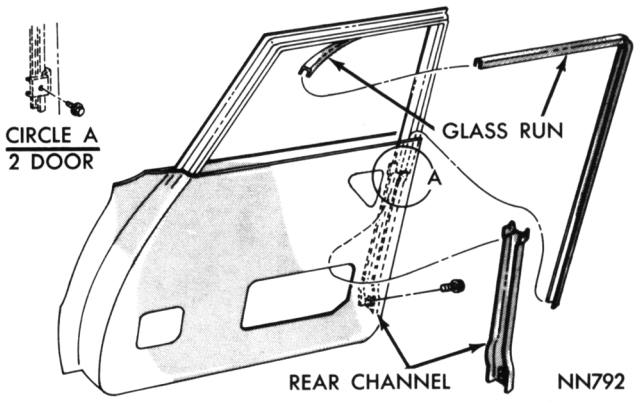

Fig. 29—Glass Run and Channel

(4) Position regulator stop against regulator sector stop and tighten nut.

Glass Replacement

(1) Loosen the division channel lower screw (Fig. 31) and move glass out of run channel.

(2) Move the glass to the rear and remove the regulator arm from the lift bracket.

(3) Remove the glass from the door.

(4) Push plug out of lift bracket rivet (Fig. 31).

(5) Pinch expandable ends of rivet together and push rivet out of glass.

Installation

(1) Position lift bracket and gasket on glass and install rivet and plug.

(2) Lubricate the slide area of lift-bracket.

(3) Position glass into door and install regulator arm roller into lift bracket channel.

(4) Position glass into run channels and adjust glass.

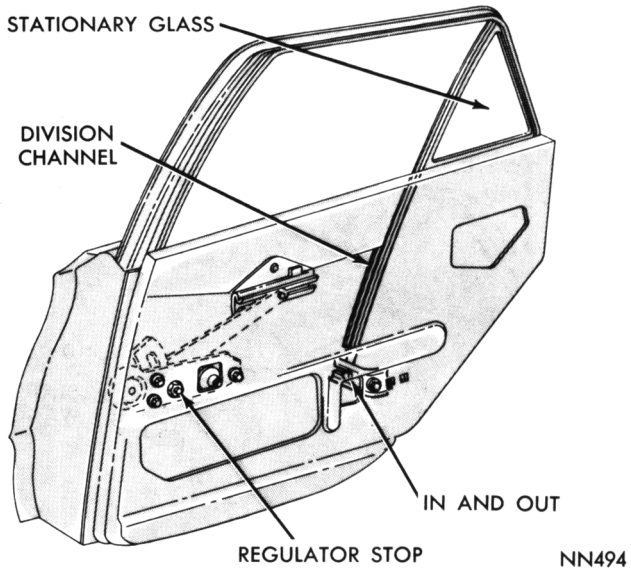

Fig. 30—Rear Door Glass Adjustments—Sedan

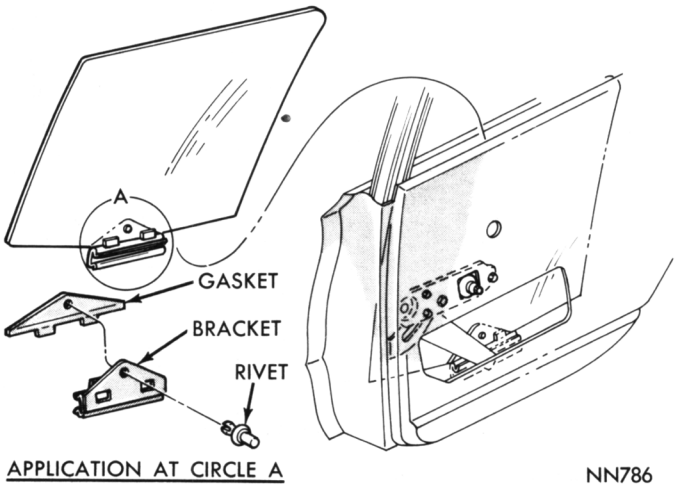

Fig. 31—Rear Door Glass Replacement

Stationary Glass Replacement

Removal

(1) Remove division channel attaching screws at upper and lower ends (Fig. 32) and remove channel.

(2) Move the glass and weatherstrip assembly forward and out of window opening.

(3) Inspect the weatherstrip.

Installation

(1) Position glass and weatherstrip assembly to window opening and move rearward into upper frame.

(2) Insert division channel run into channel.

(3) Apply a 1-1/2 inch length of sealer to joint area of division channel.

(4) With front glass in down position, insert division channel into door and move firmly against stationary glass weatherstrip.

(5) Install upper and lower attaching screws but do not tighten.

(6) Adjust the door glass.

Regulator Replacement—Manual and Electric

Service procedures for the regulator (Fig. 28) are the same as outlined for the front doors.

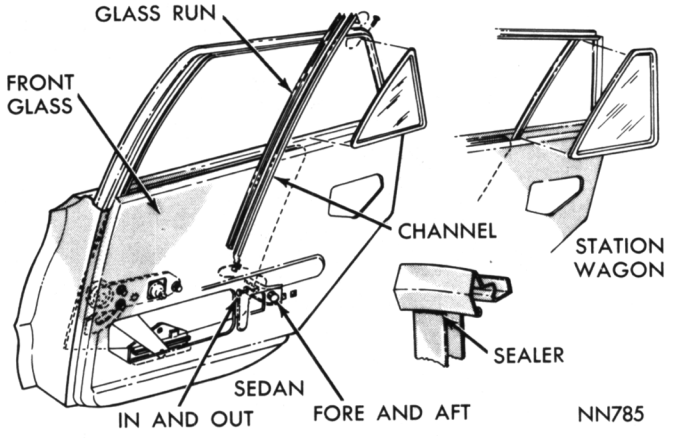

Fig. 32—Rear Door Stationary Glass

Electric Regulator Motor

Refer to the Electrical Group for tests and wiring diagrams.

Motor Replacement

When removing the motor from the regulator, **it is imperative the regulator linkage be locked in position to prevent the mounting bracket from moving around the pivot.**

Division Channel Run

The division channel run (Fig. 32) is a press fit into the channel. When replacing the run, apply a 1-1/2 inch length of sealer to joint area of division channel.

HARDTOP-CONVERTIBLE MODELS

Vent Wing and Door Glass Adjustments

(1) Open door and lower glass 1/3 way.

(2) Adjust rear run channel upper attachment (Fig. 33) until window is centered between inner and outer belt line weatherstrips and tighten nut.

(3) Close door, raise window seating top of glass and front of vent wing fully against and parallel to roof rail weatherstrip.

(4) Tighten vent wing belt line screws and nut on front leg of vent wing.

(5) Tighten vent wing bracket nuts on inside panel, front face of door.

(6) Position and tighten up stop against regulator arm.

(7) Tighten vent wing division channel support screw.

(8) Tighten division channel to lower support screw.

(9) Open door, lower window 1/2 way and tighten rear track lower screw.

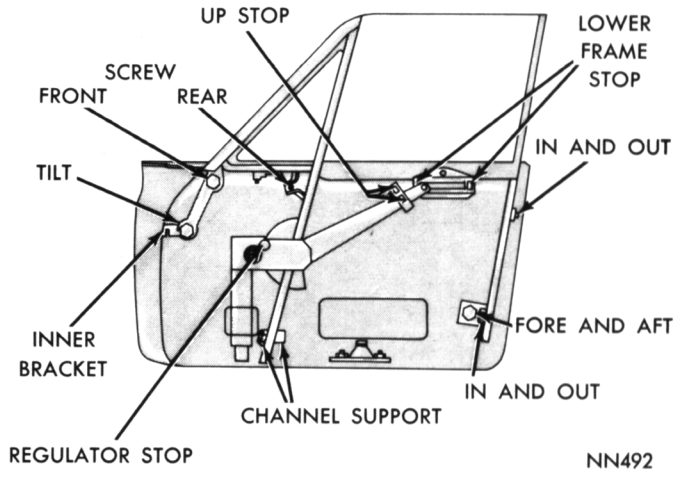

Fig. 33—Front Door Glass Adjustments—Hardtop—Convertible

(10) Tighten support to glass run channel screw.

(11) Lower window until top of glass is even with or slightly below belt line outer panel.

(12) Position and tighten regulator stop against regulator sector stop.

(13) Position and tighten stop on glass lower frame against bumper.

Vent Wing and Door Glass Replacement

Service procedures for replacement of the door glass or vent wing (Fig. 34) are the same as for Sedan Models.

Refer to Figures 34 and 35 for the vent wing and door glass attachment areas.

Regulator Replacement—Manual and Electric

The regulators are attached to the door inner panels with screw and washer assemblies.

Electric Regulator Motor

Whenever it is necessary to remove the motor from regulator, it is imperative the linkage be clamped in a vise (Fig. 27) to lock it in place. Failure to do this allows the assist spring to drive the mounting bracket around the lift pivot.

Tests

Refer to the Electrical Group for tests and wiring diagrams.

Glass Run Channel Removal

(1) Loosen vent attaching screws and adjusting stud nut and move glass forward out of run channel.

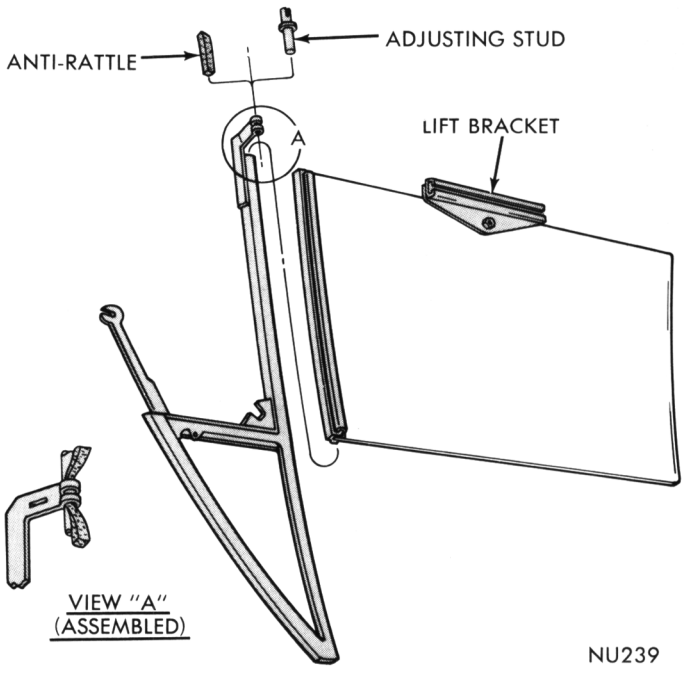

Fig. 34—Vent Wing Replacement

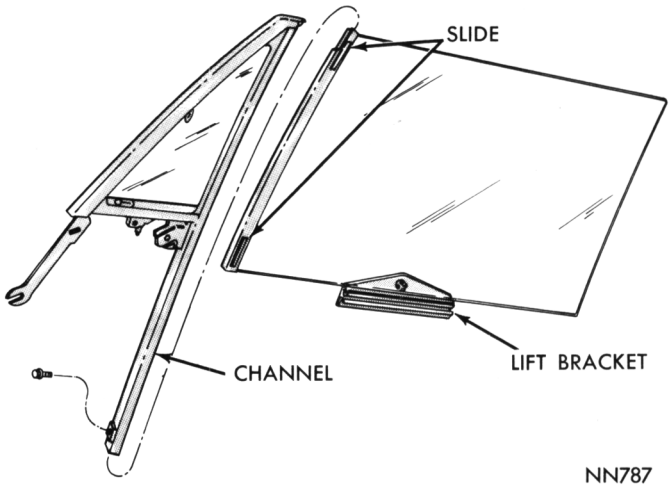

Fig. 35—Door Glass Attachment

(2) Remove run channel reinforcement plate and screw from upper end of run channel door face (Fig. 33).

(3) Disengage support on bottom of channel from door panel and remove channel.

Installation

(1) Position run channel and support into door assembly and install upper attaching screw at door face.

(2) Position support at bottom of channel to inside panel and insert tab into slot.

(3) Install reinforcement plate at lower end of rear channel.

(4) Move door glass rearward and engage it in run channel.

(5) Tighten the vent wing attaching screws and stud nut.

(6) Adjust door glass and vent wing assembly.

QUARTER PANELS

GARNISH MOULDINGS

The garnish mouldings should be positioned and held in place to assure satisfactory alignment. Do not over-tighten the mounting screws, or the moulding will become damaged at the screw hole area.

TRIM PANELS

The rear seat cushion and back must be removed to gain access to the trim panel attaching screws. The trim panels are attached with screws and clips. When installing, make certain the watershield is properly cemented and positioned.

HANDLES

The regulator handles are attached with allen head screws.

SEDAN MODELS

Two door sedan models are equipped with a vent wing type quarter window (Fig. 36). Elongated holes in the hinge allow correct positioning of the glass assembly to the opening. The release handle assembly is attached to the glass with a grommet, washer, retainer and screw (Fig. 37).

HARDTOP MODELS

Adjustments

(1) With door closed, adjust upper rear track (Fig. 38) until rear of glass lightly touches belt line weatherstrip. To move window in, turn sleeve nut clockwise; to move out, counterclockwise.

(2) Raise window seating top of glass against roof rail weatherstrip and front of window level with top of front door window.

(3) Adjust upper front track until front of window is aligned with rear of front door window. To move window in, turn sleeve nut clockwise, to move out, counterclockwise.

(4) Adjust lower front track until front of window is aligned rear of front door window at roof rail.

(5) Adjust pivot bracket until top of window is fully against and parallel to roof rail weatherstrip. To raise front of window, lower front of bracket, to lower, raise bracket.

(6) Move upper front track attachment forward and tighten when quarter window weatherstrip is against front door window.

(7) Tighten pivot bracket nuts.

(8) Loosen and position front and rear up stops against glass lower frame and tighten screws.

(9) Lower window until top of glass is even with or slightly below belt line outer panel.

(10) Turn lower rear track sleeve nut counterclockwise until its boss is against outboard side of inner panel. Tighten nut.

(11) Position and tighten regulator stop against regulator sector stop.

(12) Position and tighten down stop against bumper.

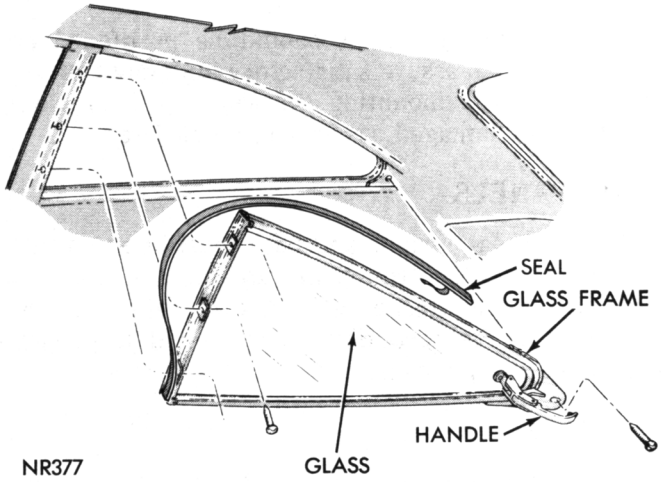

Fig. 36—Quarter Window Vent Glass

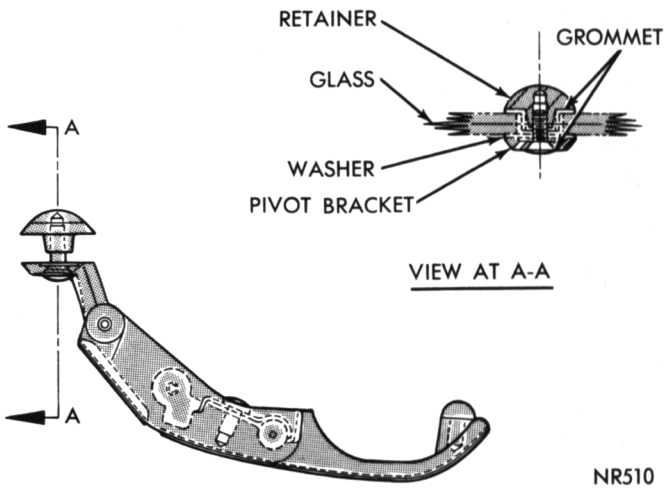

Fig. 37—Release Handle Assembly

Glass Replacement

Removal

(1) Remove retainers attaching regulator arm studs to glass lower frame (Fig. 39).

(2) Support window and remove regulator studs from lower frame.

(3) Remove rollers from slots in glass lower frame.

(4) Remove glass from quarter panel.

(5) Inspect front and rear roller tracks for damage or excessive wear.

Installation

(1) Apply lubricant to slide areas of lower glass frame.

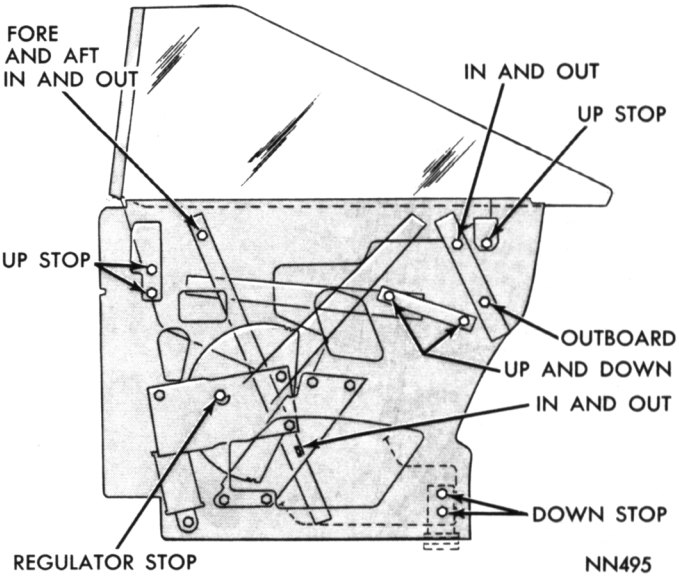

Fig. 38—Quarter Window Adjustments—Hardtop

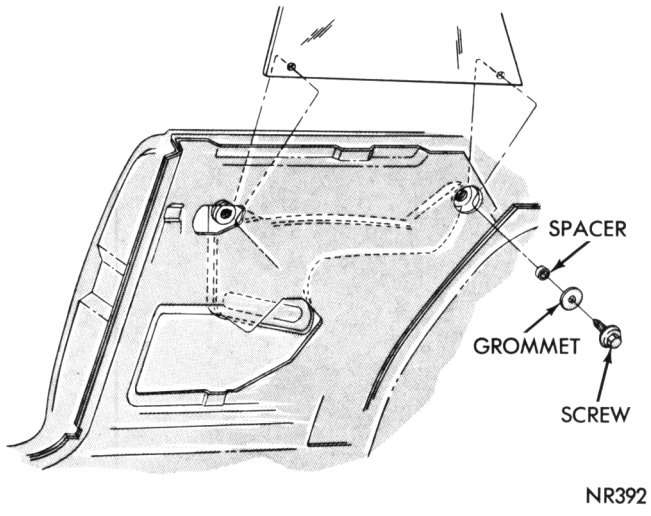

Fig. 39—Quarter Window Replacement—Hardtop

(2) Position and support window in quarter panel.
(3) Insert roller assemblies in glass lower frame.
(4) Position regulator arm studs in rollers and bushings and install retainers.
(5) Adjust quarter window.

Regulator Assembly

The regulator assembly (Fig. 40) is attached to the inner panel with screw and washer assemblies. The regulator arm studs are retained in the glass lower frame with retainers. Lubricate the regulator tooth contact area approximately 1/2 inch wide along the entire length of the arc on the outboard side of sector and to front and rear arm roller studs.

Electric Regulator Motor

Service procedures and tests for the electric regulator motor are the same as outlined for those used on door assemblies. Refer to the Electrical Group for tests and wiring diagrams.

Front Track and Brace

Removal

(1) Remove screws and washers attaching front track brace (Fig. 41) to inner panel and front track and remove brace.
(2) Remove nut and washer attaching front track upper end to the inner panel.
(3) Remove front track rollers and remove front track.

Installation

(1) Position front track into panel and insert sleeve nut at top of track into inner panel opening.
(2) Install sleeve nut lockwasher and nut, do not tighten.
(3) Position the bracket and guide assemblies (Fig. 41) onto bottom of track and slide up into position into forward upper and lower slots of glass lower frame.
(4) Position front track brace in panel and install attaching screws loosely.
(5) Attach brace to front roller track and adjust glass.

Rear Track

The rear track (Fig. 42) is positioned over the slide in rear slot of glass lower frame and the sleeve nuts are inserted into the openings in inner panel. Lockwashers and nuts are used to retain the track on the inner panel.

CONVERTIBLE MODELS

Adjustments

Procedures for Convertible quarter window ad-

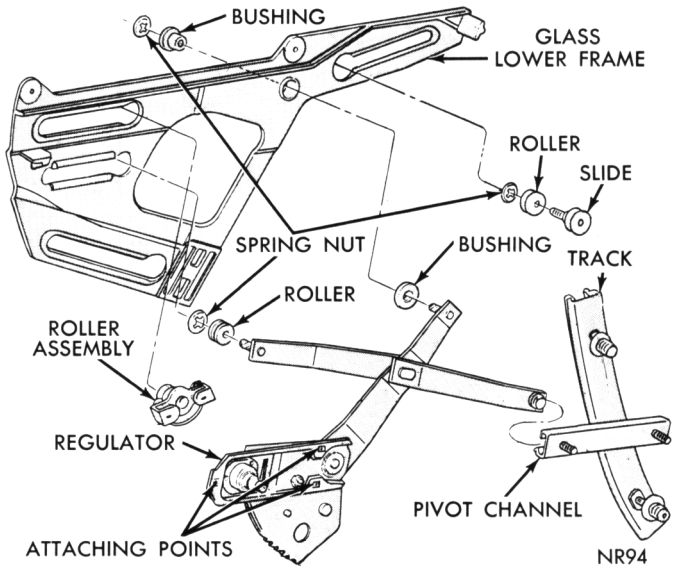

Fig. 40—Quarter Window Regulator—Hardtop

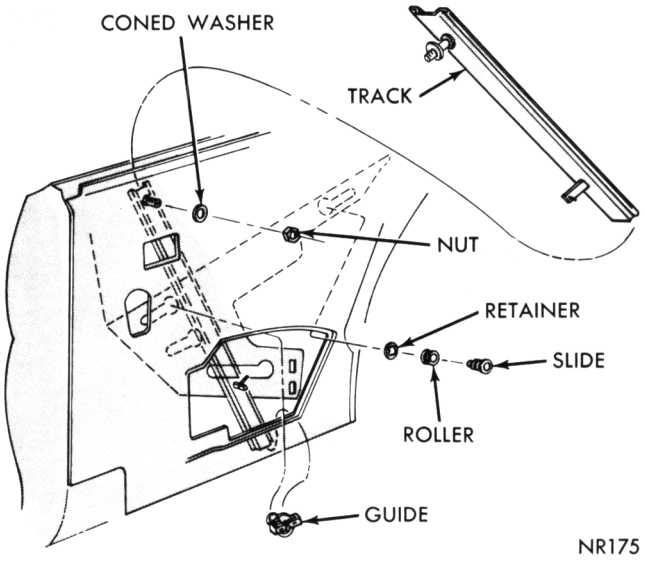

Fig. 41—Quarter Window Front Track—Hardtop

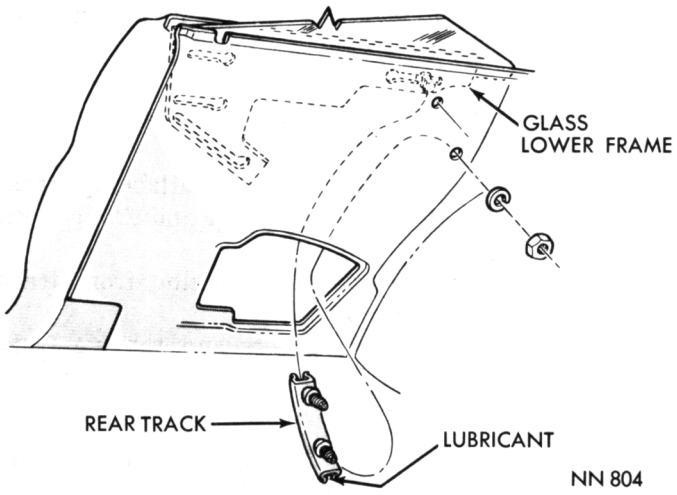

Fig. 42—Quarter Window Rear Track—Hardtop

justments (Fig. 43) are the same as for Hardtop Models with the following 3 exceptions.

(1) With door closed lower quarter window 1/4 way.

(2) Adjust upper stabilizer attachment (Fig. 44) until rear of window lightly touches belt line weatherstrip and tighten nut.

(3) Lower window until top of glass is even with or slightly below belt line outer panel. Allow glass to set lower stabilizer attachment in-out position and tighten screw.

Glass Replacement

Removal

(1) Remove the front track and roller assemblies (Fig. 45).

(2) Remove regulator arm stud retainers and studs from glass lower frame.

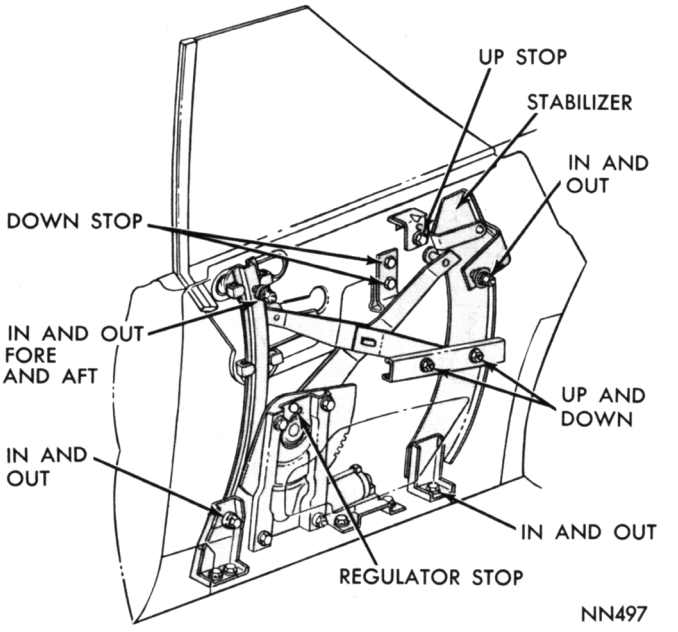

Fig. 43—Quarter Window Adjustments—Convertible

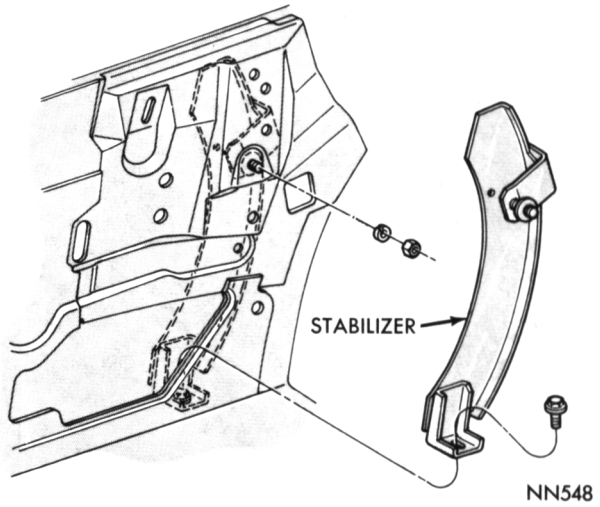

Fig. 44—Quarter Window Stabilizer—Convertible

(3) Remove roller from glass frame center slot.

(4) Raise glass and disengage from rear stabilizer.

(5) Remove glass and frame from panel.

(6) Inspect slide areas and roller assemblies.

Installation

(1) Lubricate slide areas of glass lower frame.

(2) Lower glass and frame into panel and onto rear stabilizer.

(3) Lower glass to regulator arm studs and insert studs into rollers and bushings in glass lower frame.

(4) Install retainers on regulator arm studs.

(5) Install front track and roller assemblies.

(6) Adjust quarter window.

Regulator Assembly

The regulator assembly (Fig. 46) is attached to the

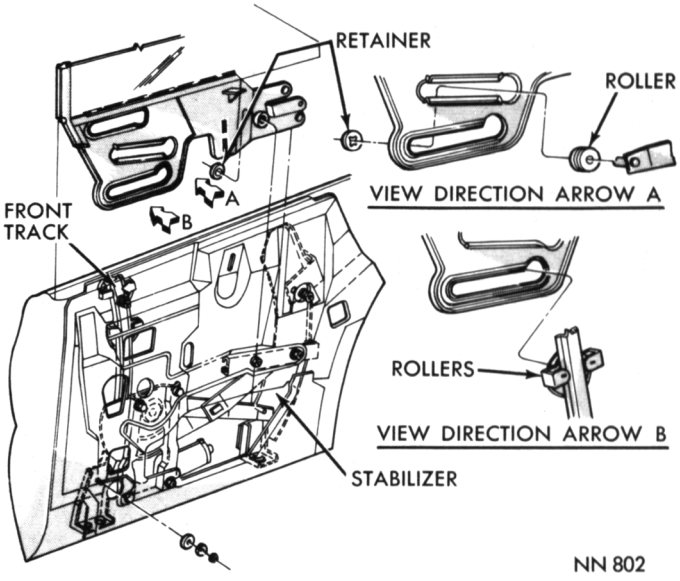

Fig. 45—Quarter Window Replacement—Convertible

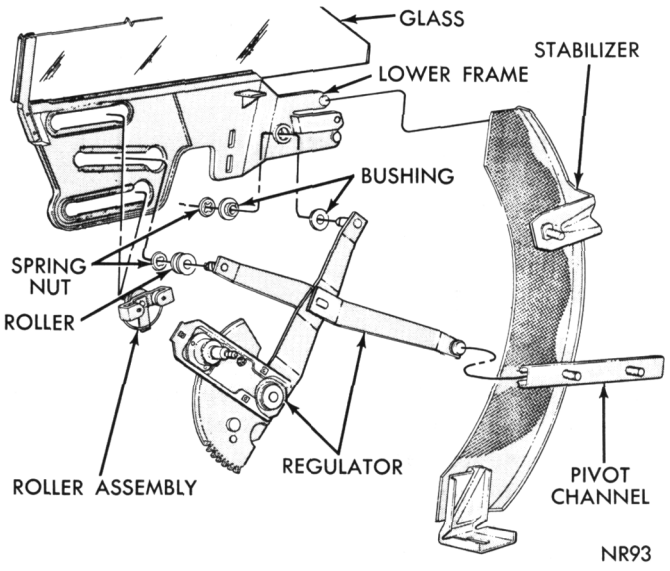

Fig. 46—Quarter Window Regulator—Convertible

inner panel with screw and washer assemblies. The replacement procedures are the same as those outlined for Hardtop models.

Electric Regulator Motor

Service procedures and tests for the electric regulator motor are the same as those for the doors. Refer to the Electrical Group for tests and wiring diagrams.

Front Track and Brace

Removal

(1) Remove screws and washers attaching front track brace (Fig. 47) to inner panel and track.

(2) Remove nut and washer attaching upper end of track to the inner panel.

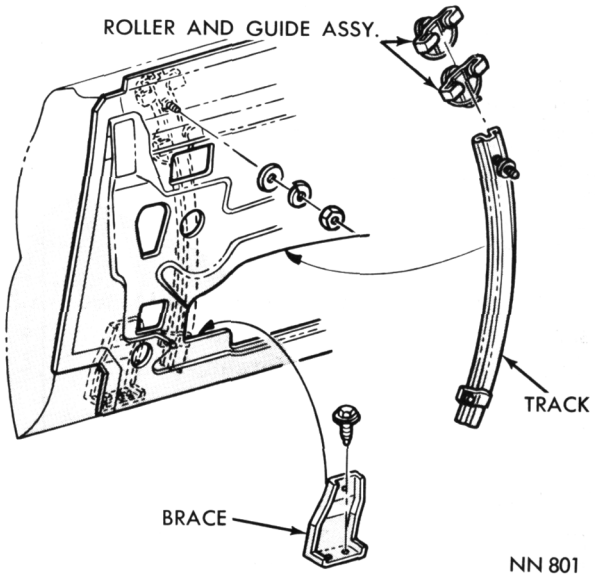

Fig. 47—Quarter Window Front Track—Convertible

(3) Remove the front track from roller assemblies and remove from panel.

(4) Remove roller assemblies from glass lower slide.

(5) Inspect rollers and front track slide area.

Installation

(1) Lubricate slide areas of glass lower frame slot slide areas and slide areas of front track.

(2) Position front track lower brace in panel and to attaching holes in side sill outer panel reinforcement.

(3) Install attaching screws and washers loosely.

(4) Install roller assemblies on front track and position assembly in panel.

(5) Insert sleeve nut on track upper stud in attaching hole in inner panel.

(6) Install nut and washer loosely.

(7) Install front track brace attaching screws run in loosely.

(8) Adjust quarter window.

Stabilizer

The quarter window stabilizer (Fig. 44) is attached to the inner panel at the upper end and to the side sill outer panel and reinforcement at the lower end. The adjusting stud at the upper end allows "in and out" movement to position glass against out belt weatherstrip. The attachment at the lower end also permits "in and out" movement.

STATION WAGONS

Glass Replacement

Removal

(1) Unlock weatherstrip (Fig. 48) by prying lip of weatherstrip apart, inserting a fibre wedge and with a slight twist to the wedge, move tool completely around weatherstrip forcing the locking tab out.

(2) Carefully loosen weatherstrip from glass on inside and outside surfaces.

(3) With an assistant supporting glass on the outside, force glass out of weatherstrip from inside the vehicle.

(4) Inspect weatherstrip for damage.

Installation

(1) When replacing the weatherstrip, make certain all foreign material is removed from fence area.

(2) Apply sealer in fence and glass groove areas of weatherstrip.

(3) Position weatherstrip on fence, making certain it is fully seated.

(4) Position glass on weatherstrip and using a fibre tool, force lip of weatherstrip over glass edges.

(5) Pound glass with the palm of hand in an upward and downward motion to seat it fully.

(6) Using a fibre tool, force locking tab into weatherstrip.

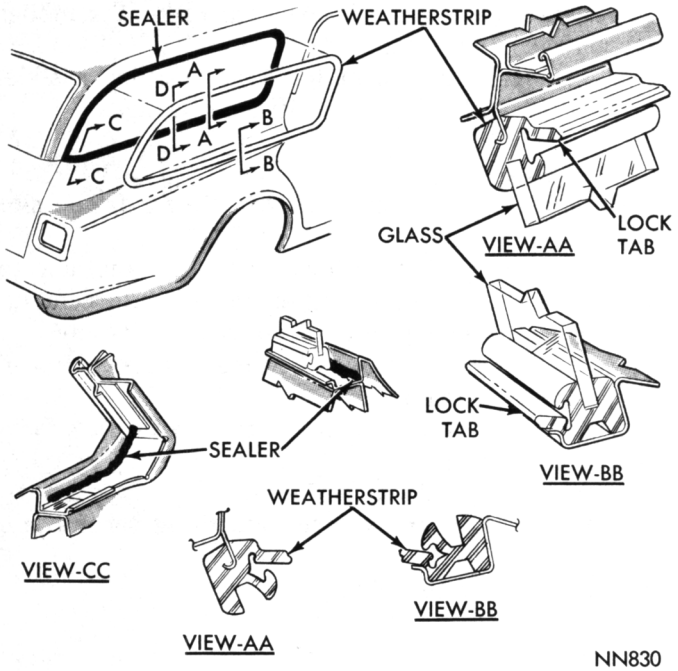

Fig. 48—Station Wagon Quarter Window

QUARTER PANEL EXTENSION

Refer to Figure 49 for application of the station wagon quarter panel extensions.

TAIL GATE

Station Wagon Models are equipped with a "two-way" tail gate that can be opened as a swingout type door or in the conventional tail gate manner. The sequence of adjusting the linkage should be followed, as outlined in this service manual, to ascertain correct locking and releasing operations.

ALIGNMENT

Vertical adjustment and in and out adjustment are made at the hinge plate. In and out alignment of the top of the tail gate is adjusted by moving the striker in or out to permit ease of entry of the tail gate glass into the upper run channel. Lateral adjustment to center the tail gate in the body opening is controlled at the hinge (Fig. 50).

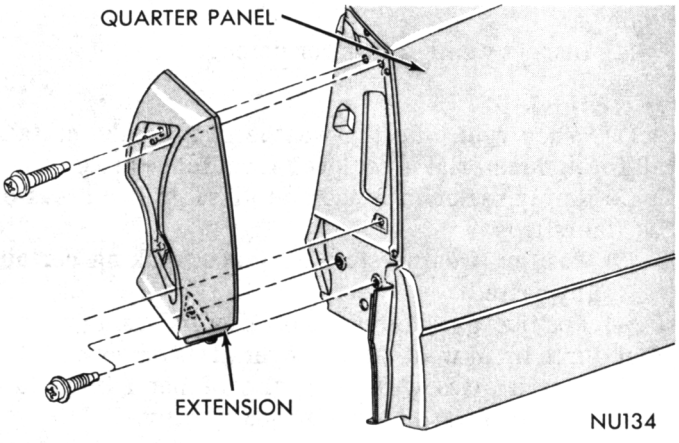

Fig. 49—Quarter Panel Extension—Station Wagon

WINDOW WASHER SYSTEM

Refer to the Accessory Group for Service Procedures, Tests and Wiring Diagrams.

REPLACEMENT

Removal

On cars with an electric window, remove trim panel and disconnect terminals at control switch. Disconnect wiper and washer electrical leads.

(1) Remove check arm and torsion bar guide from pillar guide plates.

(2) Support tail gate on jacks or stands.

(3) Loosen hinge pivot pin locking screws (Fig. 50).

(4) Use a pencil and outline hinge plate position on pillar post for future assembly.

(5) Remove hinge plate attaching bolts from pillar post.

(6) Slide hinge plate and torsion bar in through guide toward center of tail gate.

(7) Lower tail gate down and out of body opening.

Installation

(1) With torsion bar and hinge plates pushed in toward center of tail gate, engage hinge plates into lower opening of body.

(2) Attach hinge plate attaching bolts into pillar posts and locate hinge plates in relation to previous marked positions.

(3) Tighten attaching bolts firmly enough to hold position and inspect alignment.

(4) Close tail gate and center in opening.

(5) Attach torsion bar bracket to pillar post.

(6) Open tail gate and tighten locking screws on hinge pivot pin.

(7) Connect electrical leads and install trim panel.

(8) Operate tail gate window and inspect alignment.

TRIM PANEL

The tail gate trim panel is attached with metal screws. Clean all foreign material from the seating area of the trim panel before installing.

LOCK

To replace the lock assembly (Fig. 50) remove trim panel glass and glass runs. The lock assembly is retained on tail gate by screws accessible at end of tail gate.

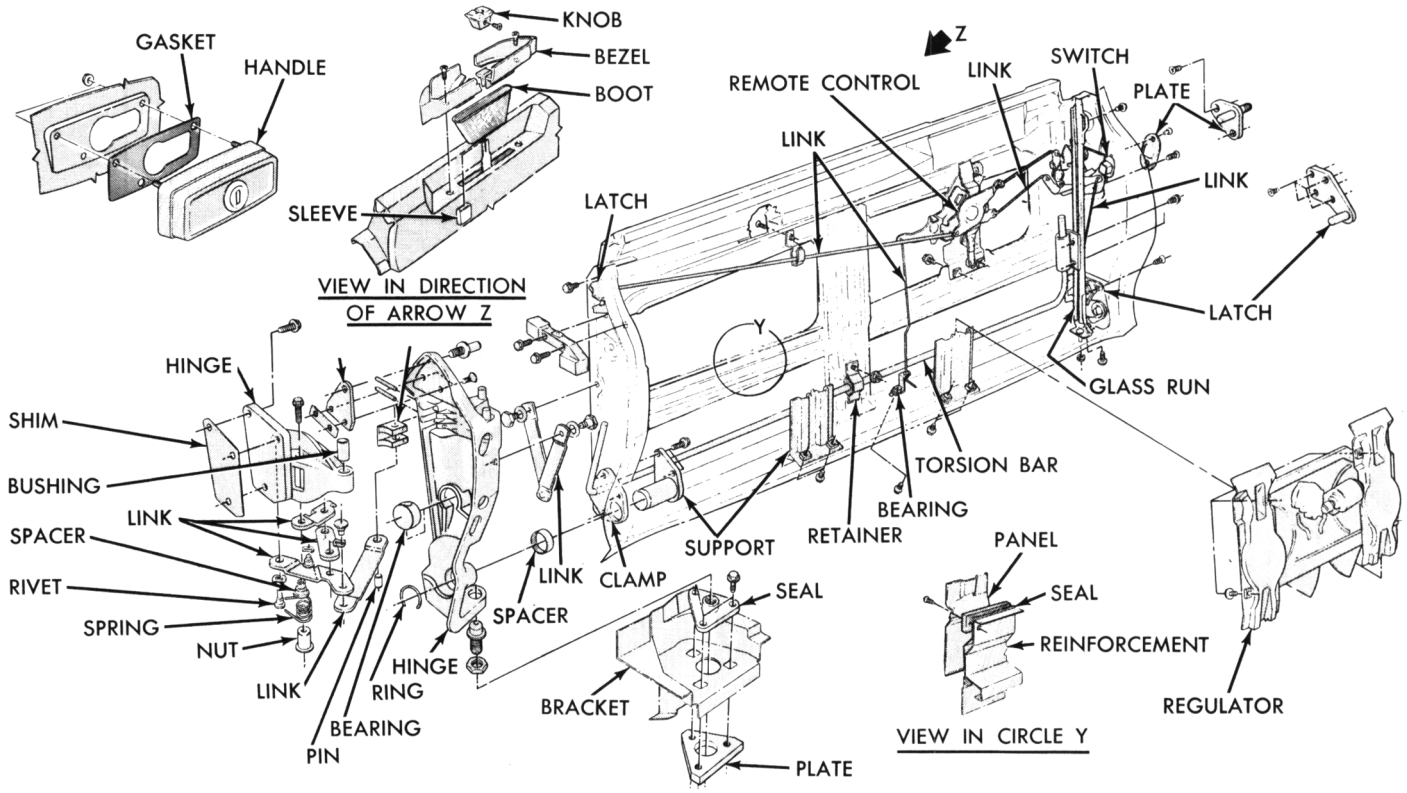

Fig. 50—Tail Gate Application

Lock Cylinder

To replace the lock cylinder (Fig. 50) it is first necessary to remove the glass and regulator to gain access to the lock cylinder retainer (horseshoe type).

HANDLES

Adjustment

Remote Control

Tail gate remote handle (Fig. 50) adjustment can be made by removing the plug located near the rotor in the lock facing of the tail gate. Loosen the hex bolt in the lock assembly and adjust the ratchet levers to allow the lock rotor to spin freely when the actuator rod is in the open position. Tighten the hex bolt after the adjustment has been made. This adjustment must be made on both sides.

Regulator Handle

With tail gate handle in unlocked position remove tail gate inner panel and remove nuts attaching handle to door (Fig. 51).

To remove a handle which is inoperative and vehicle is fully loaded, prohibiting access to tail gate inner panel, it will be necessary to remove three mounting studs from handle by drilling through handle. Refer to Figure 52 for location of drilling points.

LOCK LINKAGE

Installation and Adjustment (Fig. 53)

The lower right to upper right latch link and upper right lock to release regulator mechanism arm link can only be adjusted to three total turns from nominal position for **all** release, interlocking and latch engaging operations.

(1) Inspect locks to make certain they are in the fully latched position.

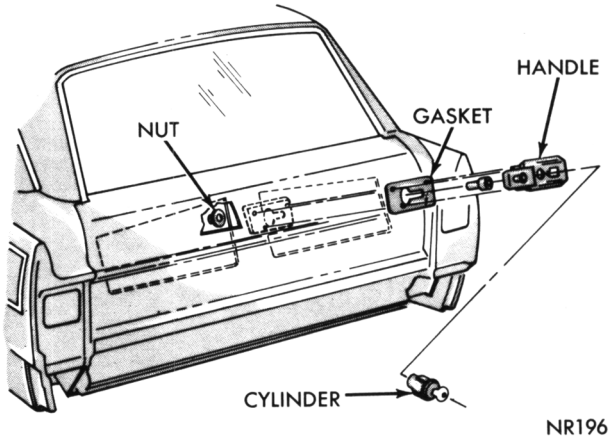

Fig. 51—Tail Gate Outer Handle

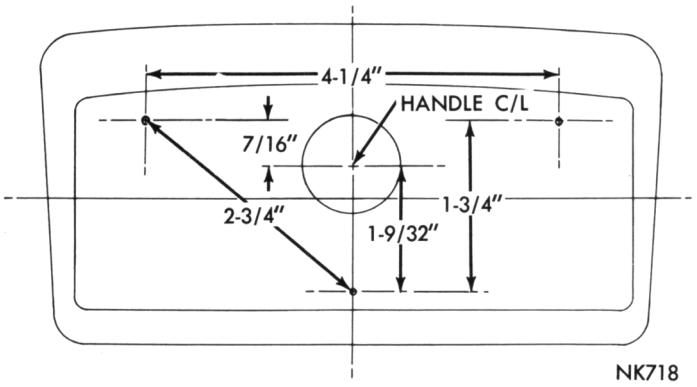

Fig. 52—Handle Stud Locations

(2) Install link to lower right latch detent clip, raise upper right lock actuator until it contacts upper latch lock detent.

(3) Adjust threaded portion of link until aligned with clip hole of actuator and insert link into clip.

(4) Connect link to upper right lock remote control lever and to release regulator mechanism actuator.

(5) Install link from release regulator arm to the glass restraining bracket.

(6) Install link into release regulator mechanism and upper left latch remote lever clip.

(7) Install link into lock remote lever.

(8) Take up all play in latch remote lever and release regulator mechanism arm and adjust link threaded end to this point.

(9) Install link into upper right lock remote lever and test operation of tail gate and door assembly.

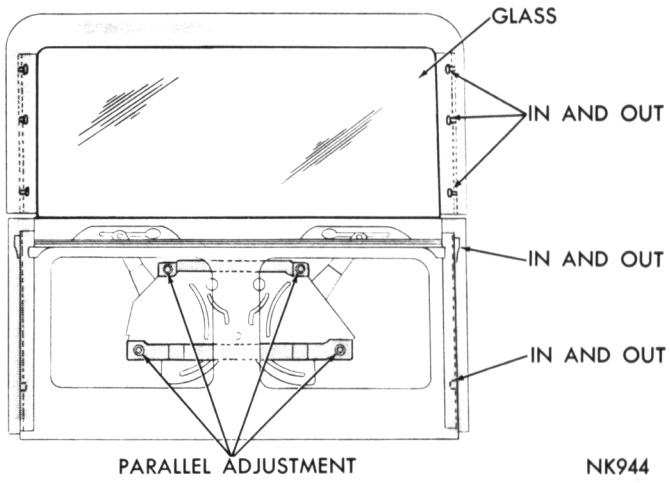

Fig. 54—Tail Gate Glass Adjustments

GLASS

Adjustments

Refer to Figure 54 for glass adjusting points.

(1) Remove tail gate trim panel and loosen regulator and run channel attaching screws and nuts.

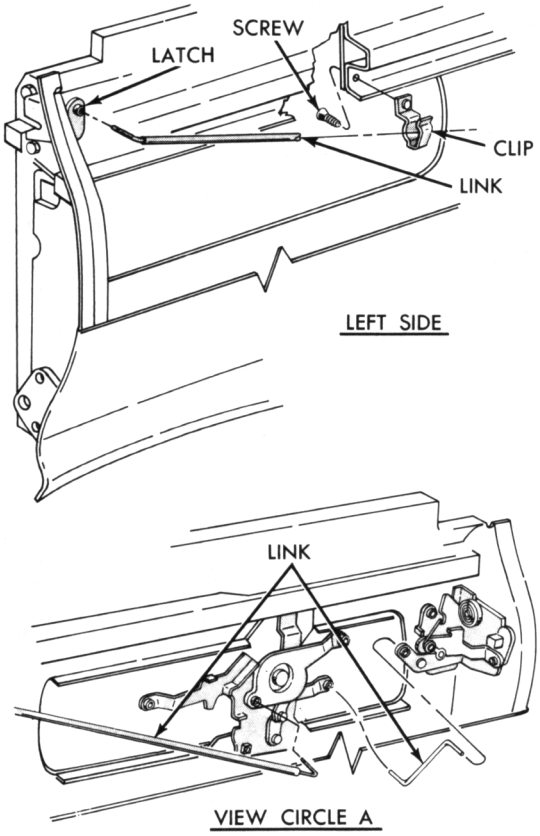

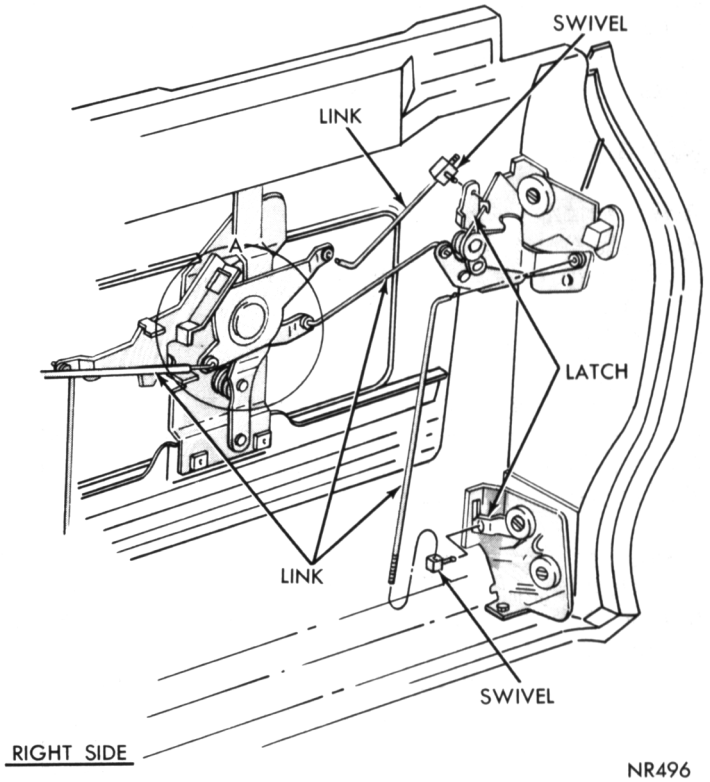

Fig. 53—Tail Gate Lock Linkage

(2) With tail gate open, adjust upper attachments of lower run channels so glass lightly touches outer belt weatherstrip.

(3) From inside vehicle and with tail gate closed, run glass 1/2 way closed.

(4) Adjust upper run channel for proper alignment with glass and tighten two top screws.

(5) Tighten lower nut on bottom of lower run channels.

(6) Run glass up to approximately 1/8 inch below glass run.

(7) Adjust regulator so top of glass is parallel to glass run. To raise or lower left or right side of glass, raise or lower regulator on that side.

Replacement

Removal

(1) With tail gate open, remove trim panel.

(2) Remove retainers (Fig. 55) from ends of regulator arm studs.

(3) Remove regulator arm studs from rollers in glass lower frame.

(4) Remove tail gate glass assembly from tail gate.

(5) Remove rollers from glass lower frame.

(6) Remove washers, spacers and screws attaching glass lower frame and weatherstrip to glass (Fig. 56) and remove frame and weatherstrip.

Installation

(1) Position outer belt weatherstrip on lower glass frame.

(2) Position tail gate glass on weatherstrip and lower frame, and install the washers, spacers and retaining screws.

(3) Apply lubricant to regulator arm studs and to glass lower frame studs.

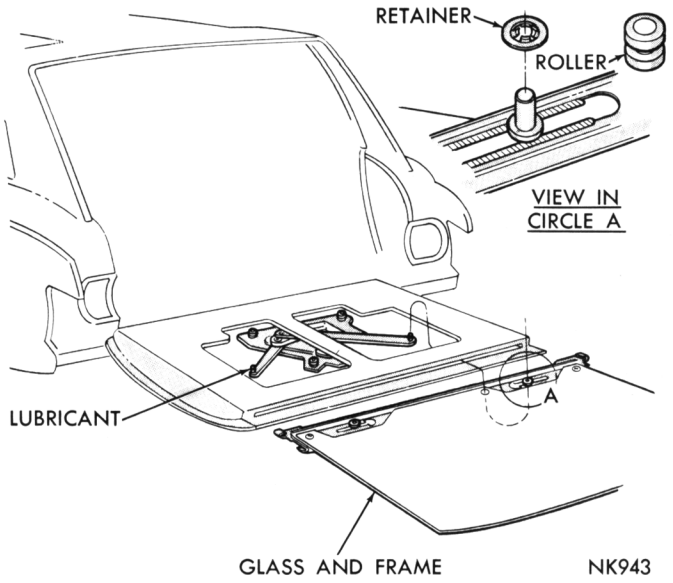

Fig. 55—Tail Gate Glass Replacement

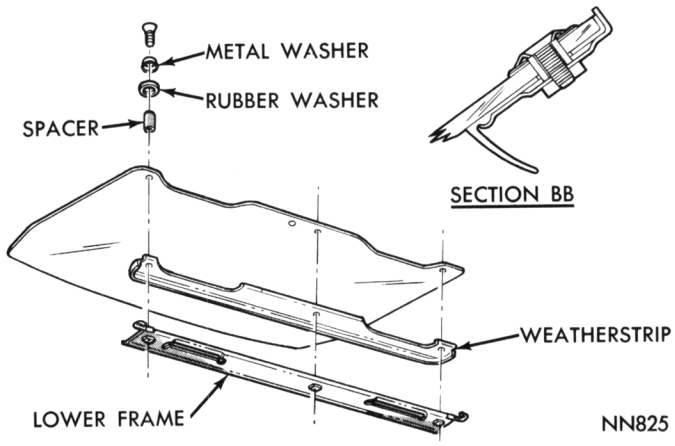

Fig. 56—Tail Gate Glass Attachment

(4) Position rollers into slots of glass lower frame.

(5) With tail gate in vertical position, insert glass assembly into tail gate.

(6) Position regulator arm studs in rollers and install retainers on the ends of studs.

(7) Adjust tail gate glass and install trim panel.

Regulator Replacement

The regulator assembly (Fig. 57) controls the parallel adjustment of the tail gate glass. The regulator assembly is attached to mounting brackets on the tail gate inner panel by screw and washer assemblies.

Tests—Regulator Motor

A tail gate glass may not move when the control switch is actuated due to a binding condition between the glass and run channels. Refer to the Electrical Group for tests and wiring diagrams.

Run Channel

Removal

(1) Remove tail gate glass assembly.

(2) Remove screw and washer assembly from upper end of glass run channel (Fig. 58).

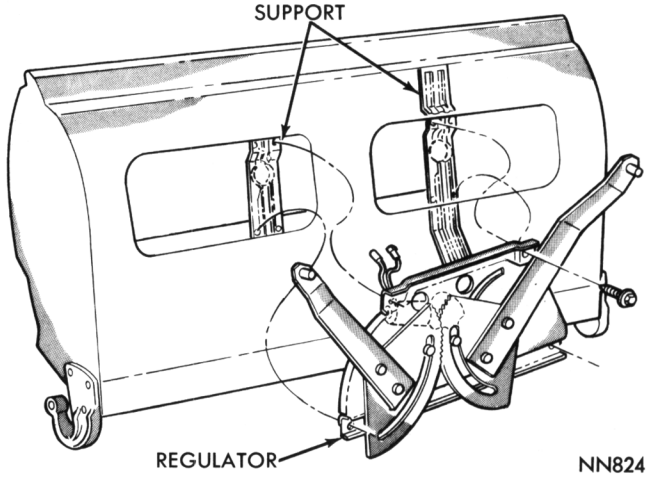

Fig. 57—Tail Gate Regulator

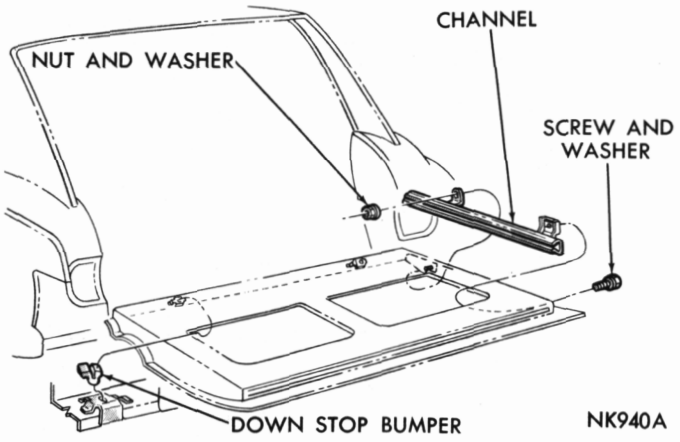

Fig. 58—Tail Gate Glass Run Channel

(3) Remove nut and washer attaching glass run at lower mounting bracket.

(4) Remove glass run channel assembly.

Installation

(1) Insert the glass lower run channel into tail gate.

(2) Position lower bracket of channel over stud on hinge reinforcement and install washer and nut finger tight only.

(3) Install upper bracket retaining screw and washer finger tight only.

(4) Install and adjust tail gate glass.

TORSION BAR

Removal

(1) Remove trim panel from tail gate.

(2) Remove screws attaching torsion bar clamp to tail gate pillar (Fig. 59) and remove clamp.

(3) Remove torsion bar bearing retainer and bearing.

(4) Remove screws attaching torsion bar and hinge to tail gate.

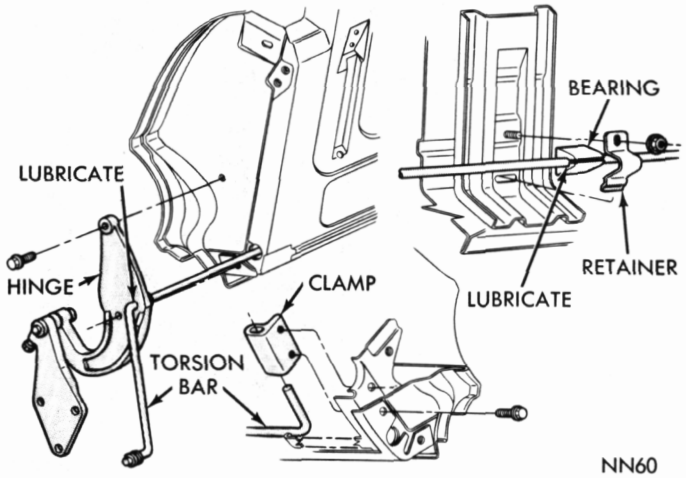

Fig. 59—Tail Gate Torsion Bar

(5) Remove torsion bar from hinge.

Installation

(1) Lubricate torsion bar at right hinge area and at torsion bar bearing area.

(2) Install hinge on torsion bar and insert torsion bar into tail gate.

(3) Position hinge to tail gate and install mounting screws. Tighten screws 30 foot-pounds.

(4) Install bearing and bearing retainer on torsion bar (Fig. 59). Tighten retainer nut 95 inch-pounds.

(5) Position clamp over end of torsion bar and from outside end of tail gate install attaching screws. Tighten to 200 inch-pounds.

(6) Install tail gate trim panel.

WEATHERSTRIPS AND RUNS

Weatherstrip—Tail Gate and Opening

Prior to installing the weatherstrip (Figs. 60 and 61) make certain the seating area is free of all old weatherstrip, sealer and other foreign material.

Apply an even continuous coat of cement, starting at the belt line, down one side, across the bottom and up the opposite side of the lower opening. Install the weatherstrip and seal the area at the belt line.

Upper Run Retainer and Seal Removal

(1) Remove five screws attaching the glass run retainer to roof rear header and remove retainer (Fig. 62).

(2) Remove seal assembly from roof rear header.

(3) Remove headlining rear corner retainer, if necessary.

(4) Remove roof headlining rear retainer from roof

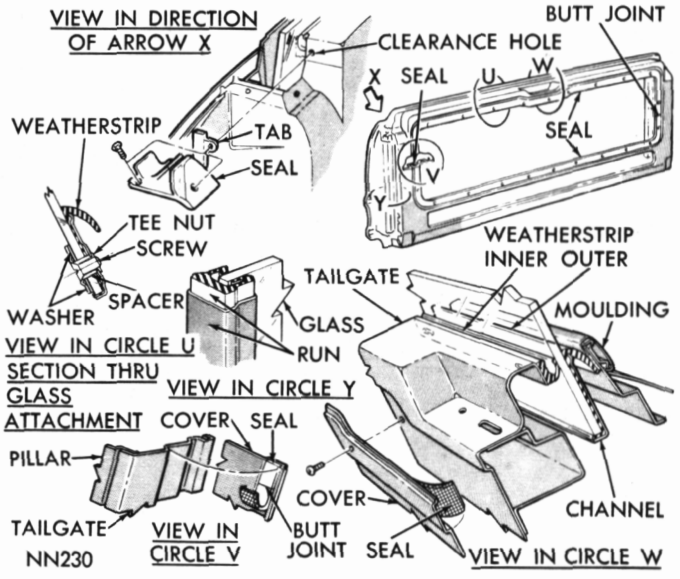

Fig. 60—Tail Gate Weatherstrips

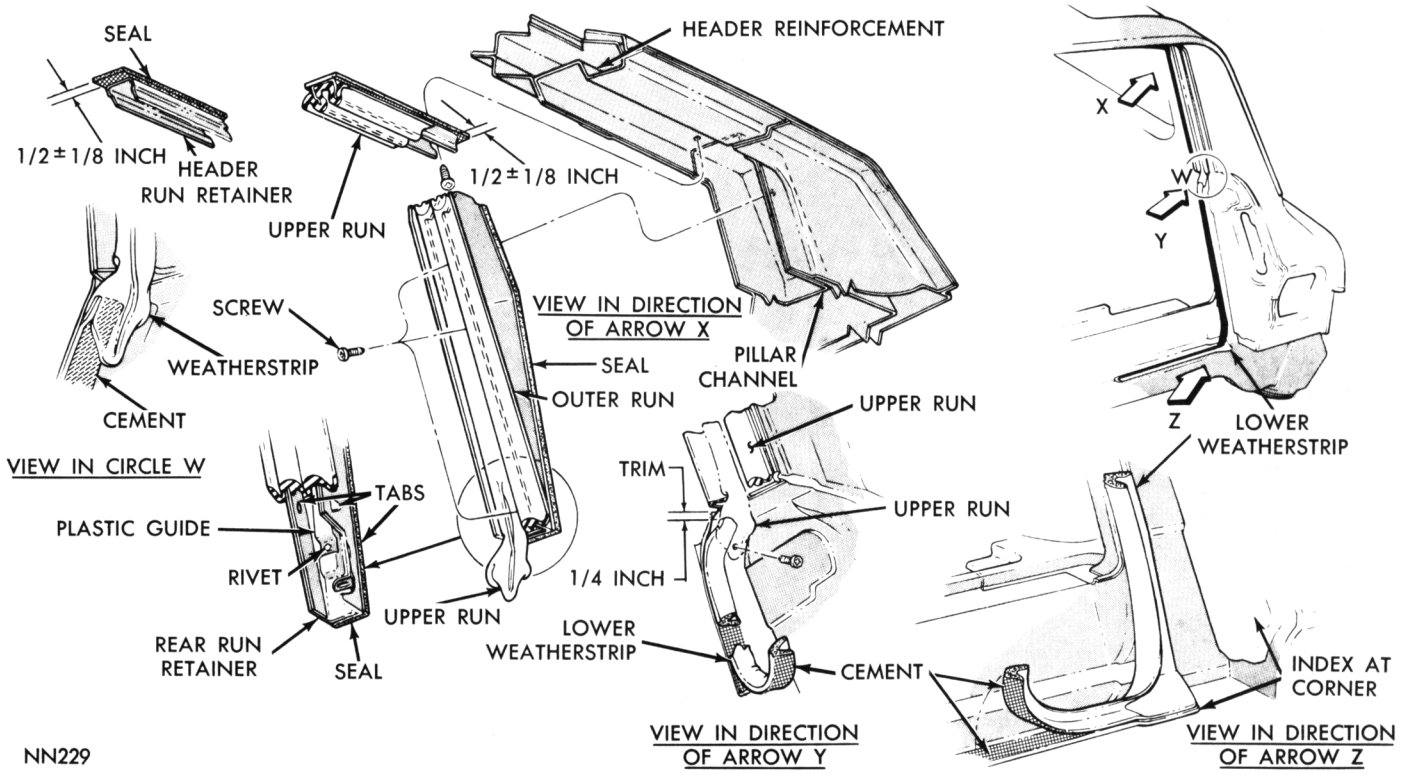

Fig. 61—Tail Gate Opening Weatherstrips

panel rear header outer reinforcement, if necessary.

Installation

(1) Position roof headlining rear retainer to roof panel rear header outer reinforcement, if removed, and install two retaining screws.

(2) Install roof headlining rear corner retainer over end of headlining retainer, if removed, and install retainer screw.

(3) Using a new glass run retainer seal, start at lower edge of upper pillar and apply seal up and across roof header and down opposite pillar.

(4) Position roof rear header tail gate glass run retainer on seal and install retaining screws.

Upper Run and Pillar Run Removal

(1) Remove upper run from run retainer (a press fit into retainer) (Fig. 63).

(2) Remove screw attaching pillar run to upper end of tail gate lower opening weatherstrip.

(3) Remove three screws attaching pillar run and retainer to pillar and remove run and retainer assembly.

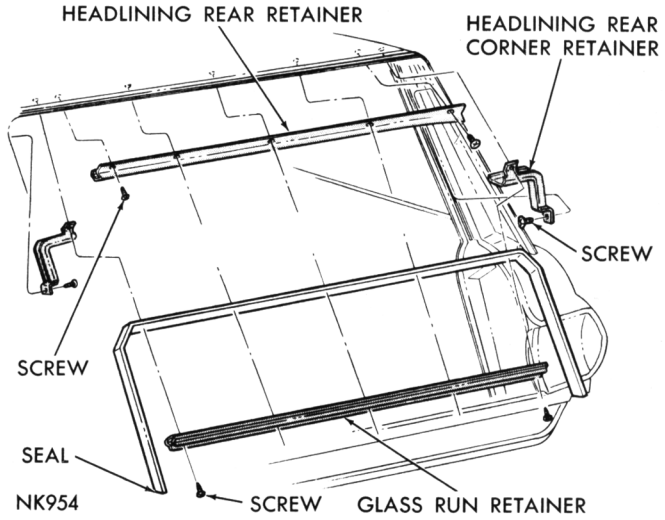

Fig. 62—Upper Run Retainer and Seal

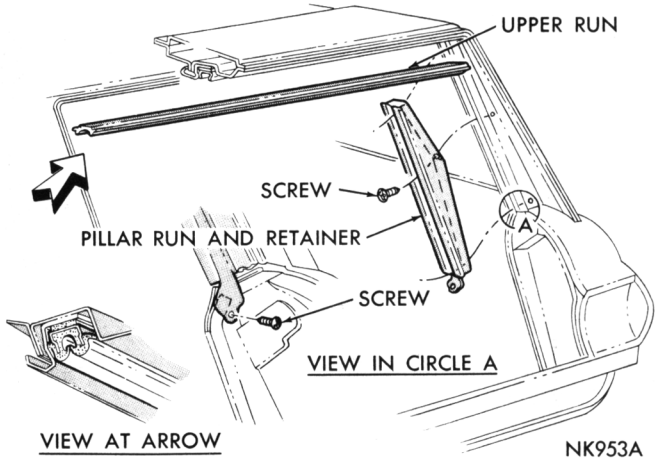

Fig. 63—Upper and Pillar Runs

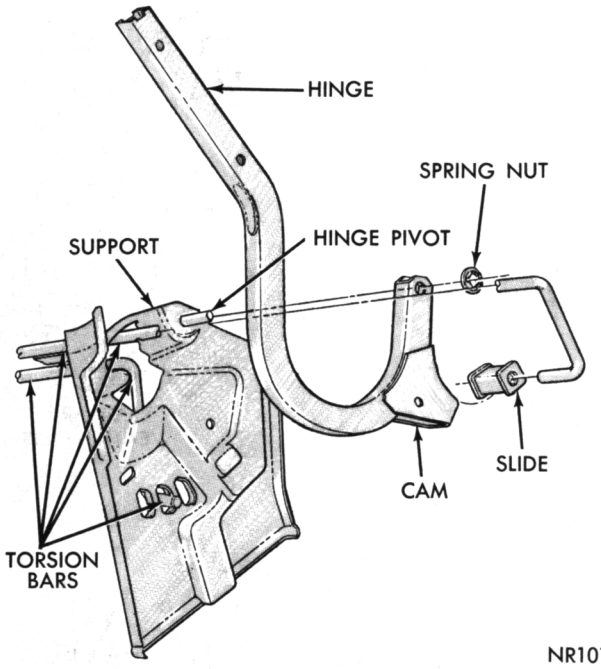

Fig. 64—Deck Lid Hinge and Torsion Bars

Installation

(1) Position pillar glass run and retainer on pillar, inserting upper end into end of roof header glass run retainer and install retaining screws.

(2) Install screw attaching lower end of retainer over lower opening weatherstrip.

(3) Starting at center line of roof rear header glass run retainer, install upper run by pressing it into retainer.

(4) Adjust pillar glass runs as necessary.

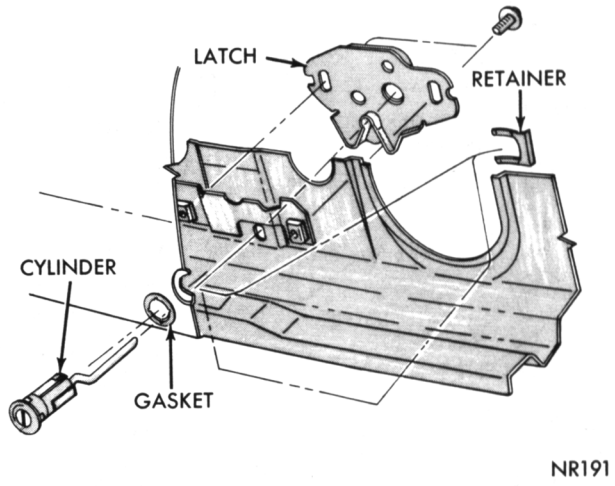

Fig. 65—Deck Lid Hinge Replacement

DECK LID

Alignment

The deck lid hinges (Fig. 64) permit only a very

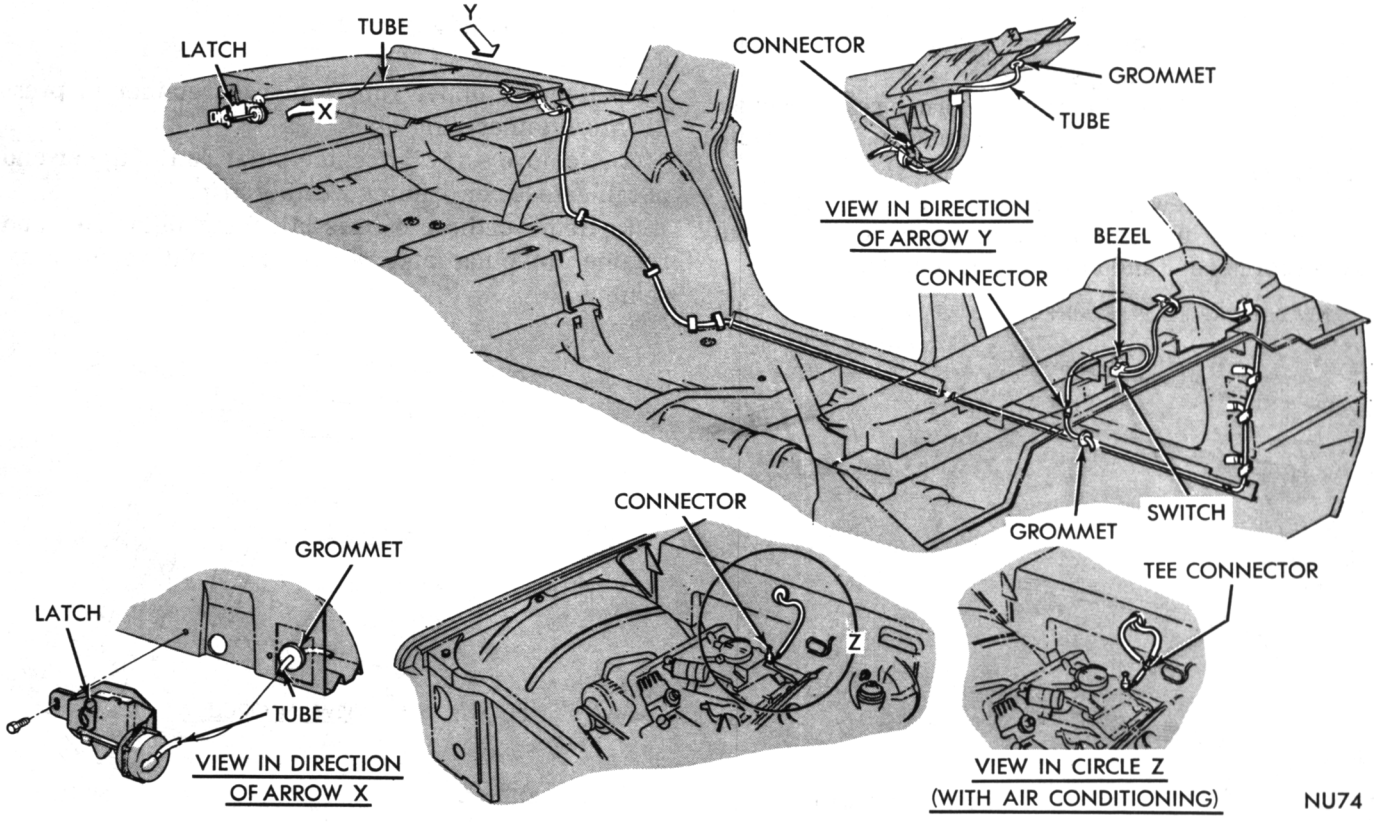

Fig. 66—Vacuum Deck Lid Latch

slight adjustment at the deck lid to hinge attaching points.

Replacement

The deck lid is attached to the hinges by two screws on each side. An assistant's aid is recommended when replacing the deck lid to prevent it from sliding rearward and damaging the paint and also to aid in the aligning of the hinge screw holes when it is installed.

Hinge Replacement

Removal

(1) Remove the deck lid assembly.

(2) Disengage the torsion bar roller from hinge being removed. Use care when disengaging torsion bar as it is under a load.

(3) Remove spring nut (Fig. 64) retaining hinge to hinge bracket and remove hinge.

Installation

(1) Use a new spring nut and install hinge on hinge bracket.

(2) Install deck lid assembly and connect torsion bar.

Torsion Bar Replacement

Removal

(1) Remove torsion bar (underspring load) from adjustment slot (Fig. 64).

(2) Unwind torsion bar.

(3) Unhook torsion bar from support bracket.

(4) Push torsion bar out of roller in hinge arm and remove from hinge support.

Installation

(1) Insert bar into hinge support.

(2) Insert end of torsion bar into roller in hinge arm.

(3) Hook torsion bar into support bracket.

(4) Wind torsion bar and insert end of bar into first adjusting slot.

(5) Place deck lid in various open positions and test tension of torsion bars.

(6) Adjust torsion bars progressively until deck lid stays in open position.

Lock Replacement

The deck lid lock assembly (Fig. 65) is attached to the deck lid by two screws. Scribe the location of the lock mounting flanges to aid in installation.

Lock Adjustment

Vertical adjustment of the deck lid lock is made at the lock attaching screws. The side adjustment is made at the striker attaching bolts.

Lock Cylinder

The deck lid lock cylinder (Fig. 65) is retained in the body by a spring steel "U" shaped clip attached from within the body.

VACUUM ACTUATED DECK LID LOCKS

The vacuum actuated deck lid lock release system (Fig. 66) consists of a vacuum tank mounted over the right front wheel housing, a push button control switch (Fig. 67) and a vacuum actuated diaphragm assembly connected to the lock. Vacuum is supplied to system from intake manifold. Rubber hoses are used to connect component units.

If failure of the system is accompanied with a rough engine idle, remove hose from manifold fitting tube and plug end of the tube. If engine idle improves noticeably, inspect hoses for possible leaks.

Should system fail to operate entirely, remove hose at the release diaphragm in deck lid and connect a

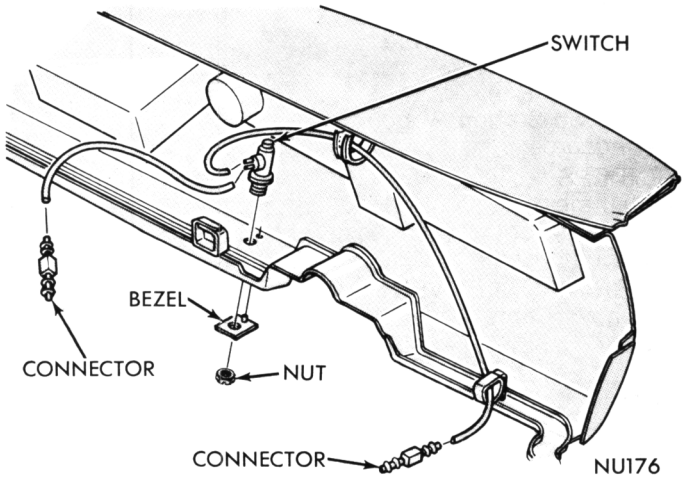

Fig. 67—Vacuum Deck Lid Switch

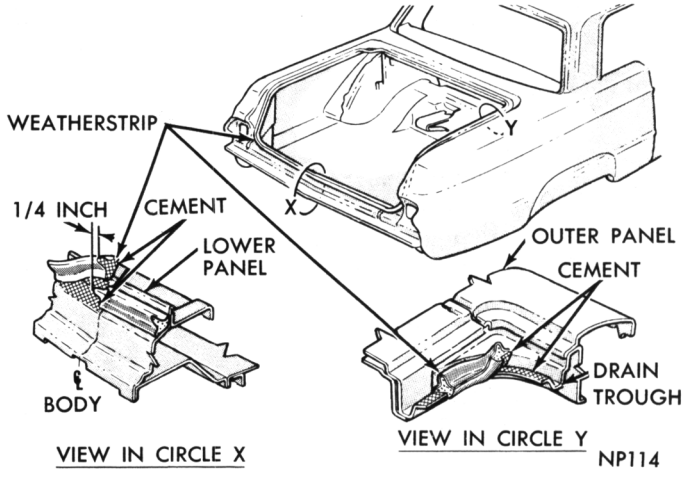

Fig. 68—Deck Lid Weatherstrip

vacuum gauge to hose. With engine running, actuate button in glove box while a helper observes gauge. If no reading can be obtained, inspect for a pinched hose. A reading of less than 16 inches will indicate a leak in the system.

Weatherstrip

Apply an even continuous coat of cement to entire weatherstrip contact surface of deck lid opening (Fig. 68) and install weatherstrip. Make sure molded corners of weatherstrip are correctly positioned.

SHEET METAL—DOORS

INDEX

FURY

	Page
BUMPERS	60
COWL	
Seal-Top Panel	57
Trim Panel—Side	57
DECK LID	
Alignment	96
Hinge	98
Lock	
Cylinder	97
Manual	97
Vacuum Operated	97
Replacement	96
Torsion Bars	98
Weatherstrip	98
DOORS	
Alignment	63
Arm Rests	64
Glass	
Convertible-Hardtop (Front with Vent Wing)	
Adjustments	81
Lift Bracket	83
Rear Channel	83
Regulators	
Door Glass	83
Motor	83
Lift Switch	83
Vent Wing	83
Replacement	81
Up-Stops	82
Hardtop (Front without Vent Wing)	
Adjustments	69
Lift Bracket	71
Pivot Bracket	72
Rear Track	71
Regulators	
Arms	72
Motor	72
Lift Switch	72
Replacement	70
Up-Stops	71
Hardtop—Rear	
Adjustments	73
Assembly	75
Lift Bracket	76
Regulators	
Motor	76
Lift Switch	76
Replacement	73
Up-Stops	75
Sedan-Station Wagon—Front	
Adjustments	77
Glass Run	78
Lift Bracket	78
Regulators	
Motor	78
Lift Switch	78
Replacement	77
Sedan-Station Wagon—Rear	
Adjustments	78
Glass Run	79
Lift Bracket	80
Pivot Bracket	79
Regulators	
Motor	80
Lift Switch	80
Replacement	79
Handles—Inside	64
Outside	66
Hinge	64
Lock Assembly	
Cylinder	65
Electric	66
Solenoids	
Adjustment	66
Replacement	66
Lock and Switch	66
Remote Control Switch	64
Latch Push Rod	66
Latch Replacement	65
Trim Panels	64
Watershields	64
Weatherstrips	
Belt-Outer	68
Hardtop-Convertible	
Door	67
Roof Rail	68
Sedan-Station Wagon	67
Windcords	68
FENDERS	
Alignment	59
Replacement	59
Wheelhouse	59
FRESH AIR INLET VENT	
Control Cable	57
Door	57
GRILLE	60
HOOD	
Alignment	58
Hinge	59
Lock	58
Replacement	58

	Page
QUARTER PANELS	
Extensions	91
Garnish Mouldings	83
Glass	
Hardtop—Convertible	
Adjustments	84
Down Stop	85
Front Track	86
Lower Frame	87
Pivot Bracket	85
Rear Track	86
Regulators	88
Motor	88
Lift Switch	88
Replacement	85
Up-Stops	85
Station Wagon	
Replacement	89
Handles	83
Reflectors-Side	91
Trim Panels	83
Watershields	84
Weatherstrips	84

	Page
RADIATOR YOKE SUPPORT	
Air Shield and Cross Bar	60
TAIL GATE	
Alignment	91
Glass	
Adjustments	94
Lift Channel	94
Rear Channel	95
Regulator	94
Replacement	94
Lock Assembly	
Cylinder	93
Linkage	93
Replacement	92
Roof Rear Air Deflector	96
Trim Panel	93
Torsion Bar	95
Weatherstrips	
Pillar-Retainer and Seal	96
Rear Header	95
Retainer	95
Window Washer System	91

SERVICE PROCEDURES

COWL TOP PANEL SEAL

The cowl top panel seal (Fig. 1) is fastened to the panel by retainers moulded into the seal.

SIDE COWL TRIM PANEL

The side cowl inner trim panel (Fig. 2) is attached to the panel with screws and at the rear lower edge under the floor sill step plate. A silencer pad is used between the trim panel and cowl panel.

Build-Up and Installation

(1) Position cowl side trim panel extension under windshield garnish moulding and install screw.

(2) Apply cement to trim panel and position insulation on cemented area. Hand press to assure positive adhesion and position spring nut on panel.

(3) Position trim panel under clip at upper front and to cowl side inner panel. Install retaining screws.

(4) Install floor sill inner moulding over panel end and install screws.

FRESH AIR INLET VENT CONTROL CABLE

Replacement

The fresh air inlet vent control cable, housing and knob (Fig. 3) is serviced as an assembly. The cable housing shank has two flat edges, indexing with corresponding edges in the panel and is retained on the panel with a nut at the rear. The housing is attached to the vent door bracket with a clip and the coiled cable end is positioned over a pin on the door.

Adjustment

Door adjustment is controlled by the cable housing attachment at the door bracket (Fig. 3). Loosen clip screw attaching the housing to the door bracket and push control cable knob to the fully closed position. Holding vent door closed, pull cable housing slack out of door flange. Tighten clip screw and test operation of cable and door.

VENT DOOR

Removal (Fig. 3)

(1) Remove cowl side trim panel and silencer.

(2) Remove actuator cable housing to door bracket clip.

(3) Slide cable off of pin on door and out of door frame flange.

(4) Remove door to cowl side panel screws.

(5) Remove door and seal assembly and inspect seal for damage.

Installation

(1) Install spring nut to bottom of fresh air door housing, if removed.

(2) Position seal in line with outer edge of housing flange (Fig. 3).

(3) Position fresh air door on cowl side panel, align attaching holes, install attaching screws and tighten progressively.

(4) Insert actuator cable assembly, through hole in door frame flange and install coiled end of cable over pin on door.

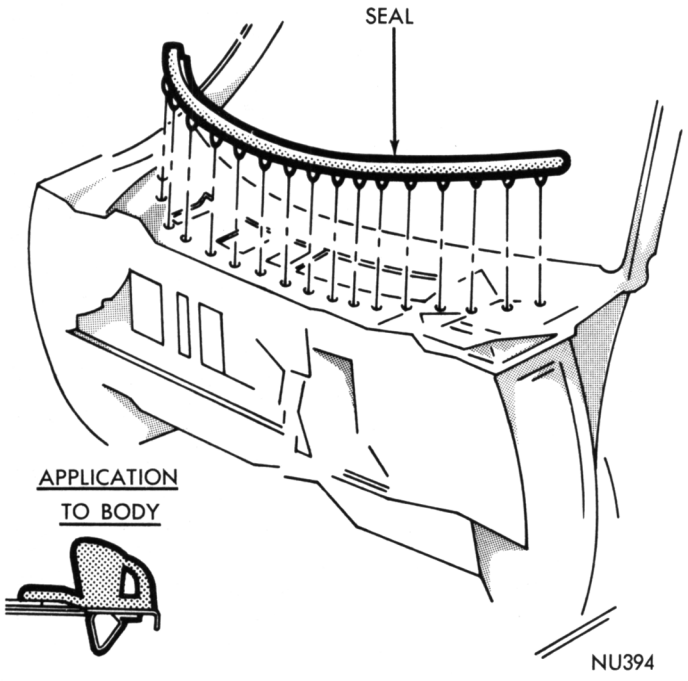

Fig. 1—Cowl Top Panel Seal

(5) Position clip over cable and attach to door bracket.

(6) Adjust vent door cable housing and install trim panel and silencer.

HOOD

ALIGNMENT

Prior to making any adjustment inspect clearances and alignment of hood sides in relation to cowl, fenders and grille. The cowl adjustment must be made first. Elongated holes in the hinge (Fig. 4) permit the hood to be moved up, down, fore and aft.

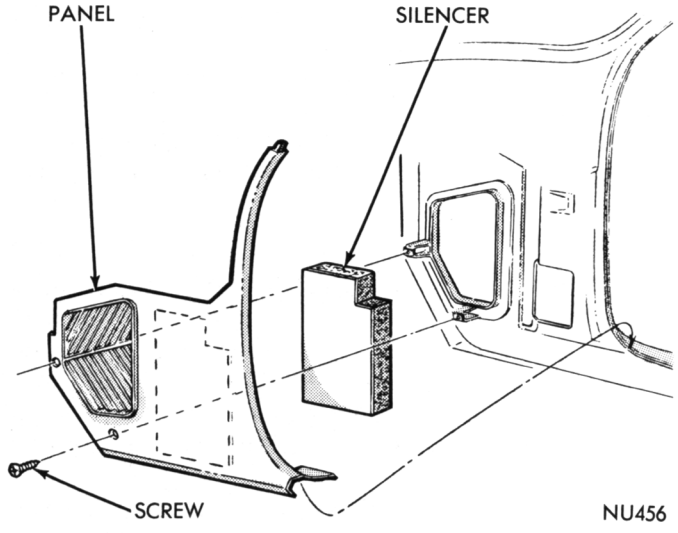

Fig. 2—Side Cowl Trim Panel

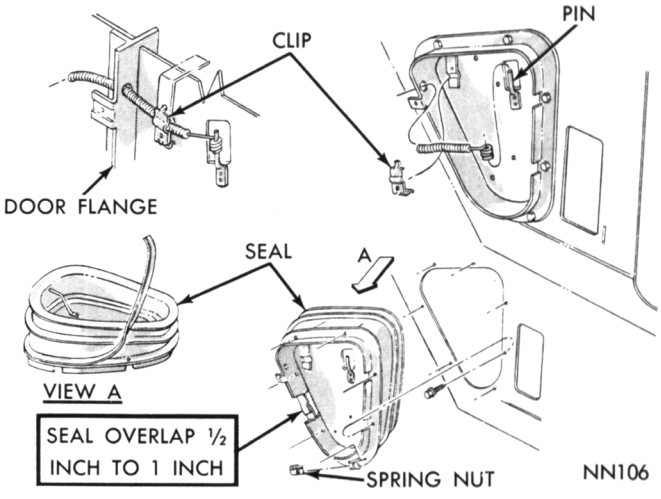

Fig. 3—Side Cowl Fresh Air Vents

REPLACEMENT

Removal

(1) Place a protective covering over cowl and fender area.

(2) Mark outline of hinges on hood to aid in installation.

(3) Use extreme care not to permit hood to slide rearward and damage painted surfaces of the cowl and fender areas when removing hood bolts.

Installation

(1) With an assistant, position hood on hinges and install bolts loosely.

(2) Align scribe markings on hood with hinge and tighten screws lightly.

(3) Close hood and inspect hood alignment.

(4) Adjust alignment and tighten bolts 180 inch-pounds.

(5) Remove protective coverings.

LOCK

To adjust lock (Fig. 5), loosen attaching screws

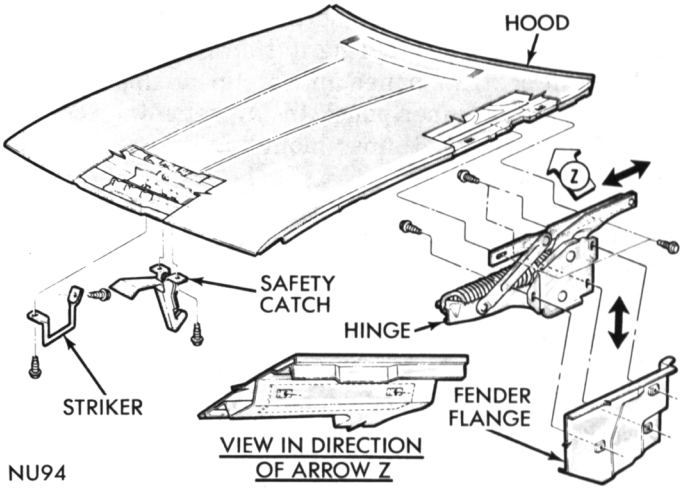

Fig. 4—Hood Adjustment

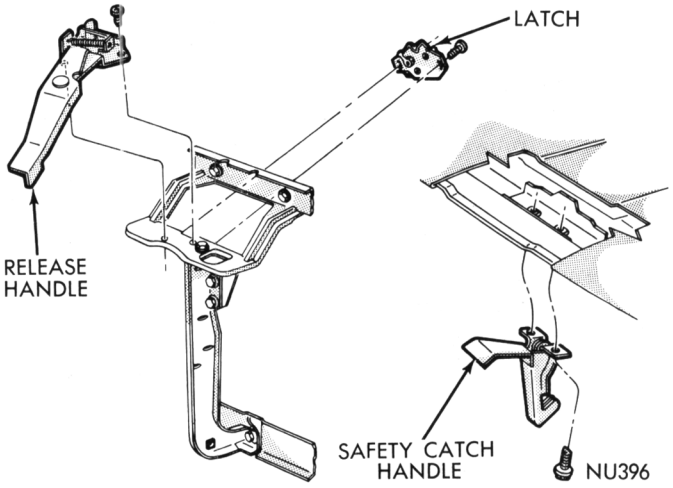

Fig. 5—Hood Latch and Release

and raise or lower until correct adjustment has been obtained. After making any adjustment requiring shifting of hood, always inspect hood striker and lock for alignment.

HINGE REPLACEMENT

The hood hinge (Fig. 4) is attached to the hood by two screws and to the fender splash shield by three screws. Prior to removing the hinge mounting screws, prop the hood into the wide opening position. The prop should be positioned so the hood cannot move rearward.

FENDERS

ALIGNMENT

The fender should be adjusted to provide for equal spacing at the cowl, door front edge and door panel top edge. Alignment should be made at bottom of floor sill panel, front of hood and door outer panel upper edge.

REPLACEMENT

Removal

(1) Disconnect battery ground strap.

(2) Tape leading edge of front door and cowl to fender area to avoid damaging paint.

(3) Remove front bumper assembly.

(4) Disconnect head lamp wires and remove grille extension to fender nuts.

(5) Remove fender to cowl, floor sill, wheelhouse and radiator yoke nuts and screws (Fig. 6).

(6) Remove fender assembly and if necessary, mouldings, ornamentation and headlamp assemblies.

Installation

(1) Install head lamps, mouldings and ornamentation. Carefully position fender on studs at cowl side area and align fender with mounting holes in radiator yoke. Install all retainer screws and nuts.

(3) With fender correctly positioned, tighten screws and nuts securely.

(4) Connect head lamp wires and install grille to fender nuts. Connect battery ground strap.

WHEELHOUSE

To remove the one-piece wheelhouse (Fig. 7) it is first necessary to remove the bumper and fender. The

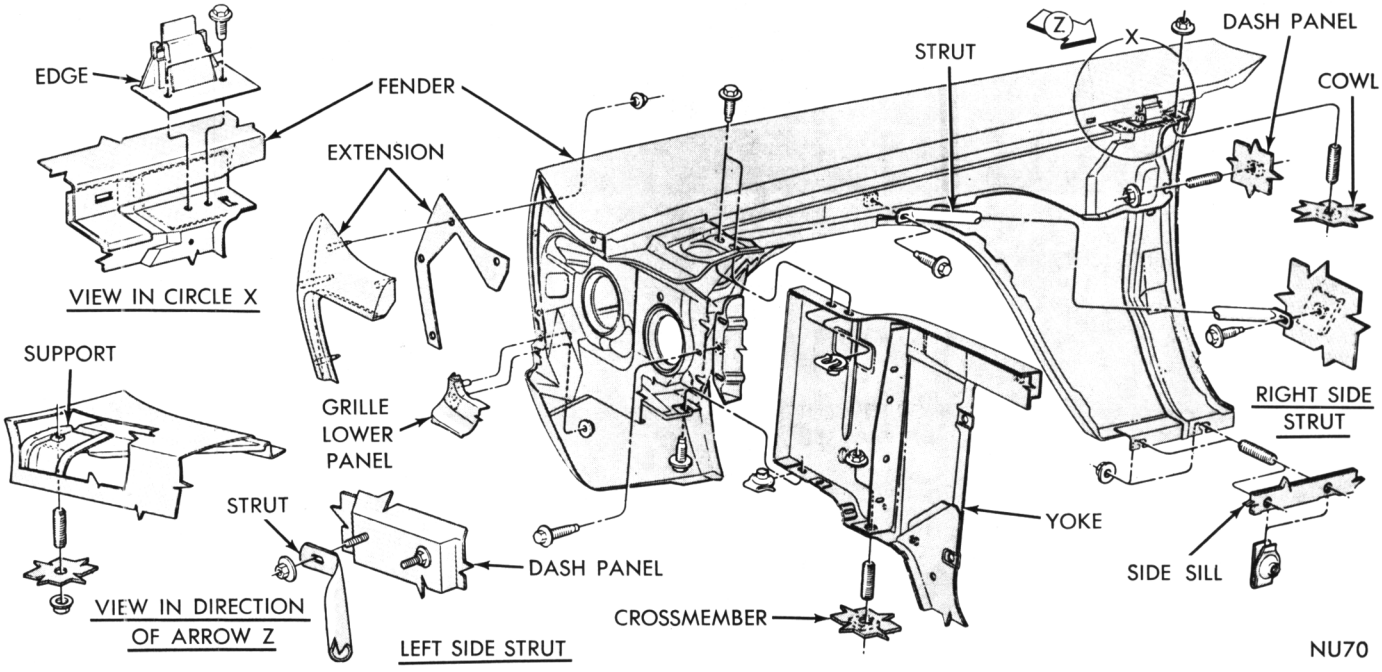

Fig. 6—Fender Attachment

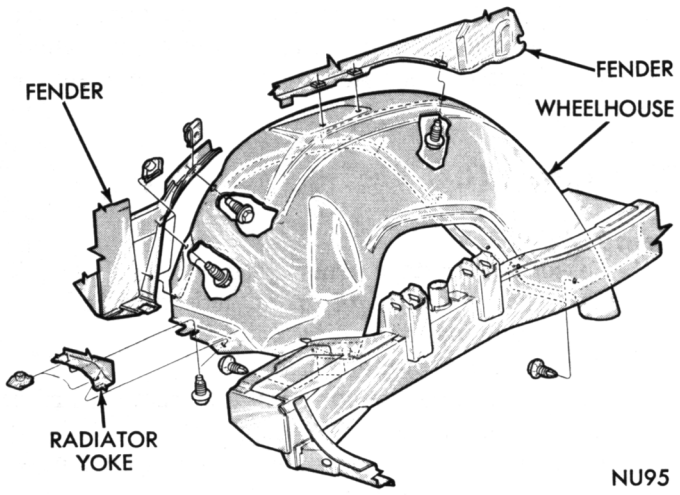

Fig. 7—Wheelhouse Attachment

wheelhouse, at the front end, is attached between the frame and radiator yoke. When installing wheelhouse, make sure it is correctly aligned before tightening screws.

RADIATOR YOKE SUPPORT

REPLACEMENT

Removal

(1) Remove radiator assembly.

(2) Remove hood lock striker bar, horn and head lamp wiring from yoke support.

(3) From under the fenders remove wheelhouse to yoke support screws (Fig. 8).

(4) Remove support to frame screws and support.

Installation

(1) Position yoke support on frame and install frame to support screws finger tight.

(2) From under the fenders, install splash shield to support screws finger tight only.

(3) When all screws have been installed, tighten progressively.

(4) Attach horn and light wires to the yoke support with plastic straps.

(5) Install radiator and hoses, fill cooling system and inspect for leaks.

AIR SHIELD AND CROSS BAR

Refer to (Fig. 8) for air shield and cross bar attaching points.

BUMPERS

FRONT AND REAR BUMPERS

Refer to (Fig. 9) for front and rear bumper attaching points.

GRILLE

ALIGNMENT AND REPLACEMENT

The grille assembly (Figs. 10 and 11) must be held against the vertical lock support and pushed back against the fenders before securing, in order to avoid

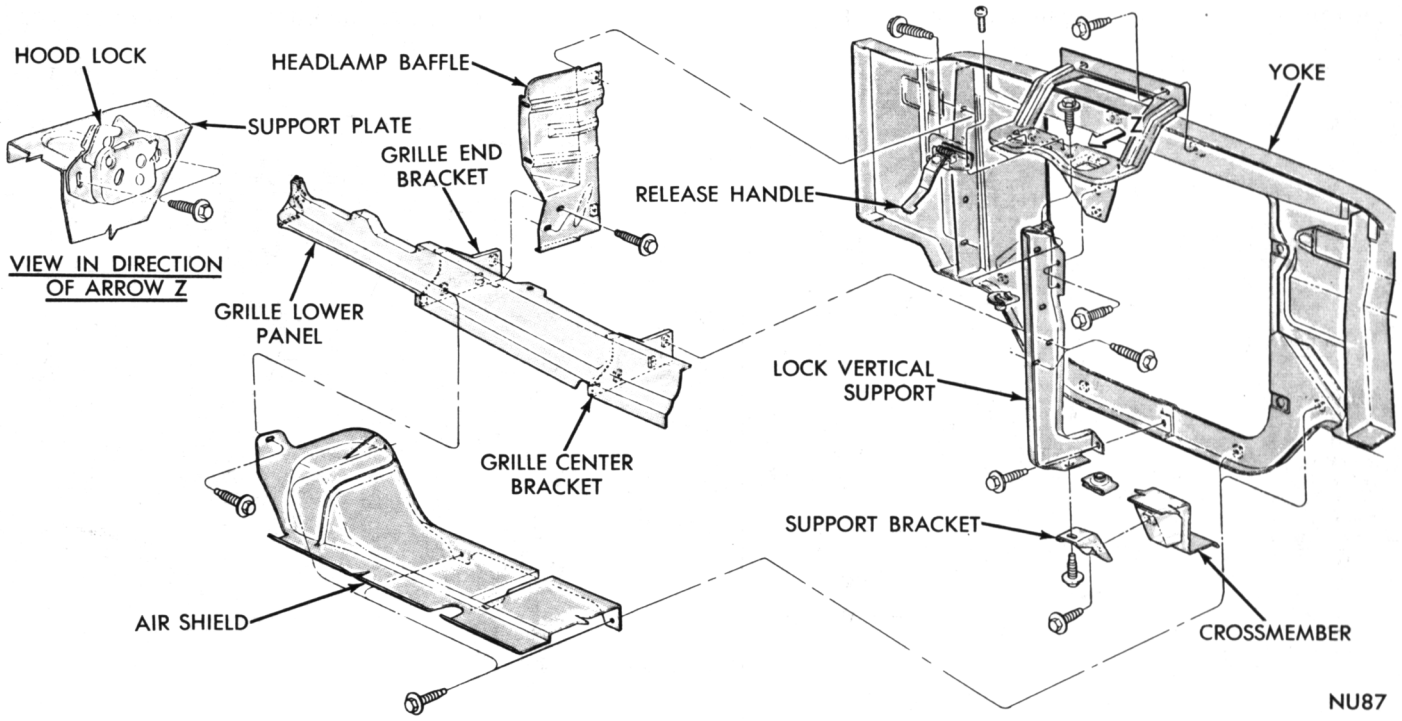

Fig. 8—Radiator Yoke Assembly

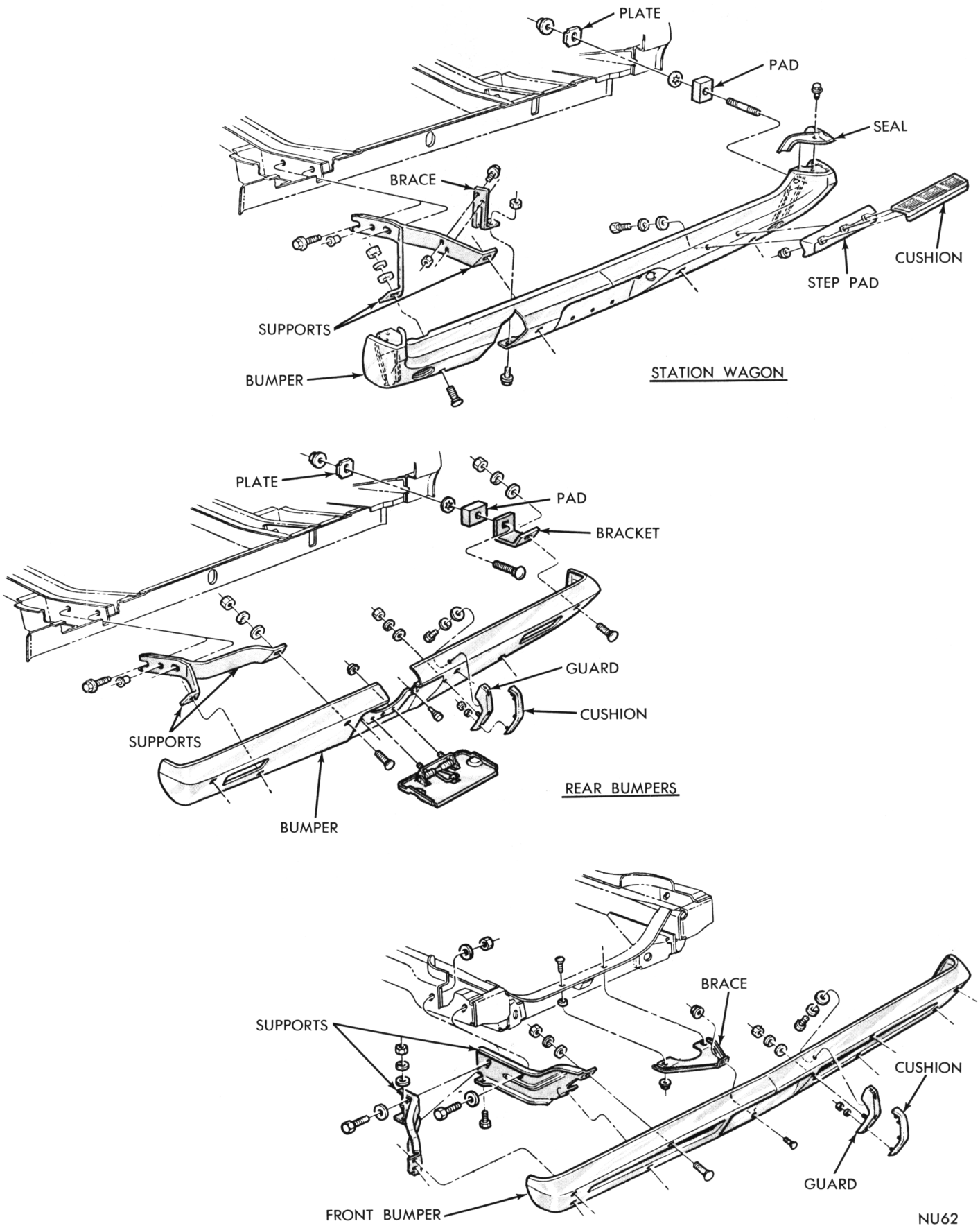

Fig. 9—Front and Rear Bumpers

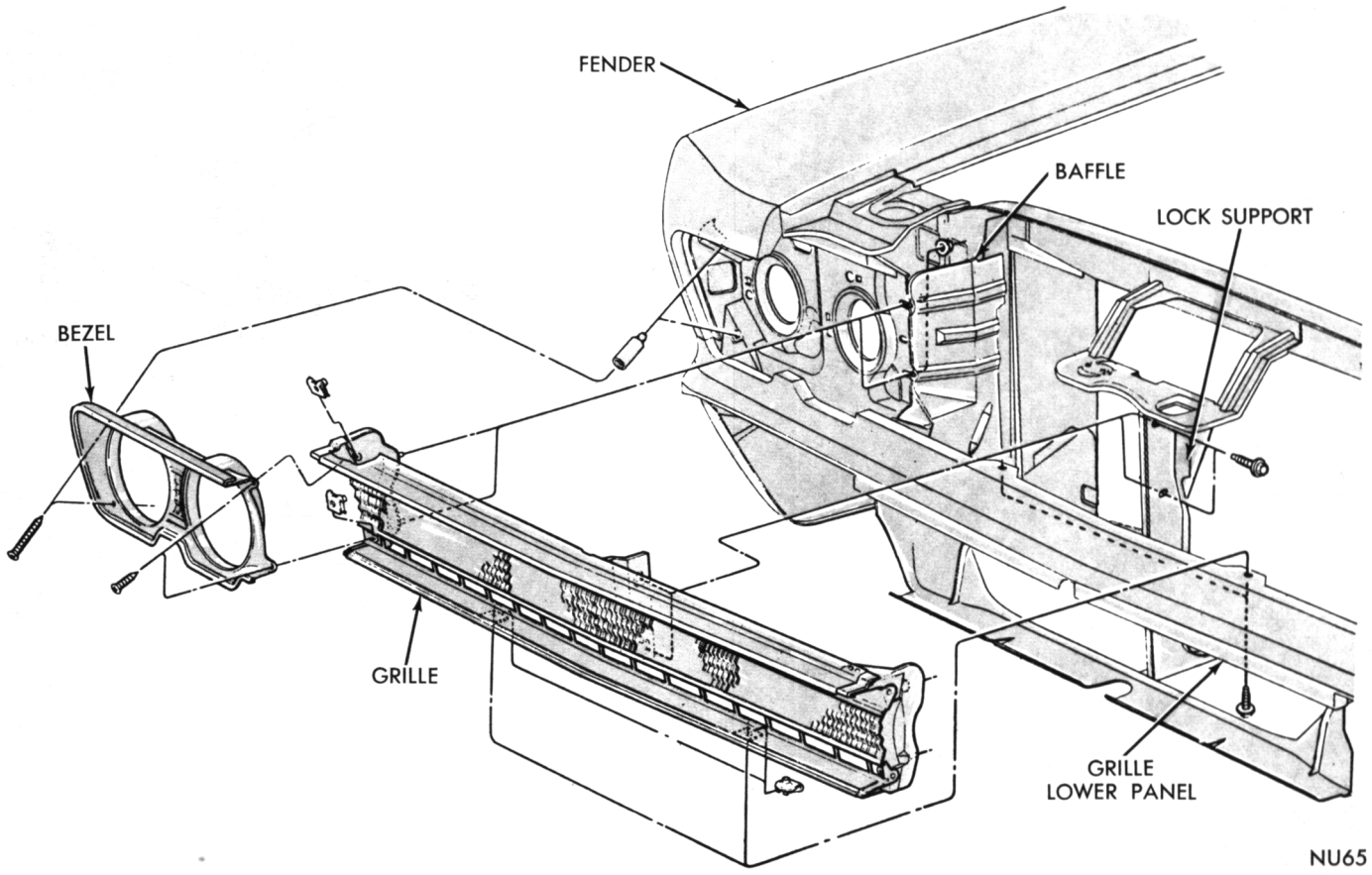

Fig. 10—Grille Application—Fury I-II-III

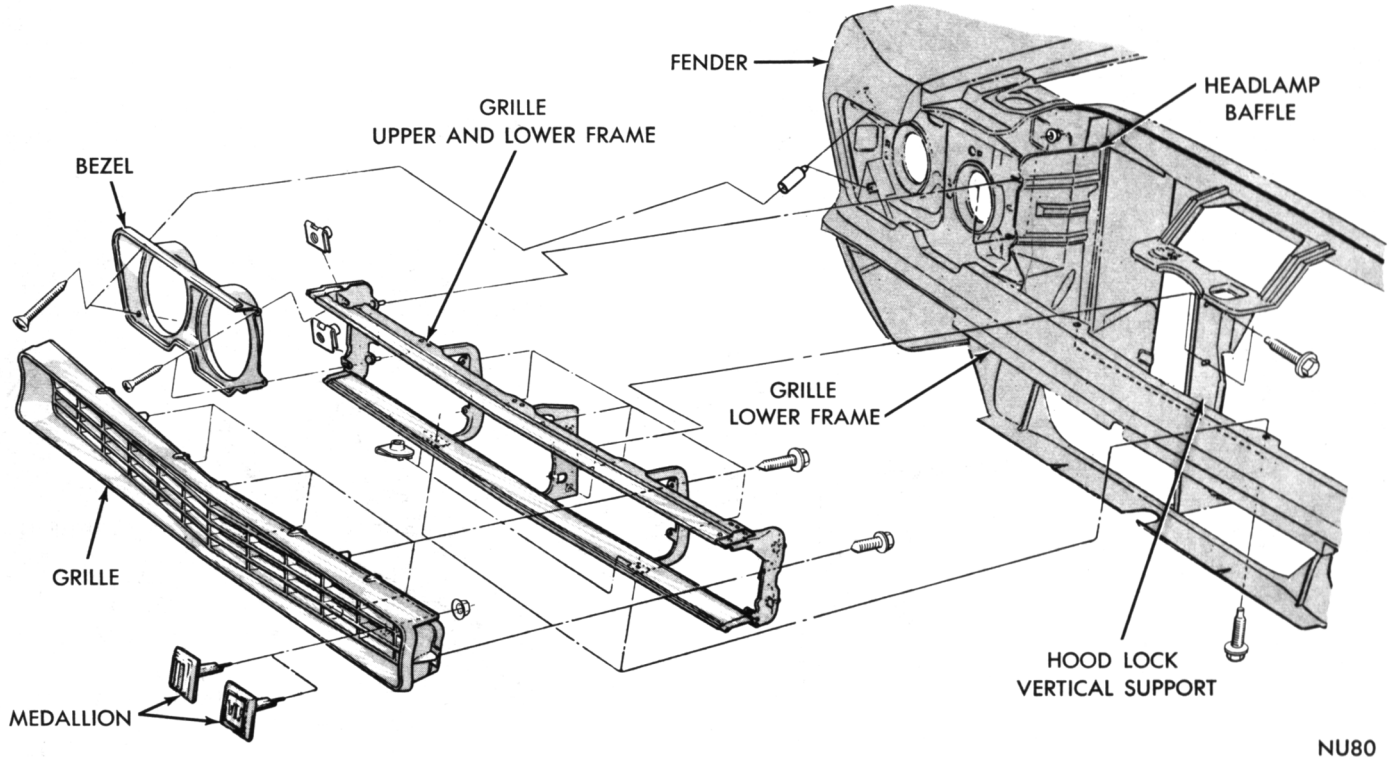

Fig. 11—Grille Application—Sport Fury—VIP

stressing and possible fracturing of the die cast metal.

DOORS

Service procedures for internal door components do not include obvious operations, such as removing door or quarter panel trim panels, testing operation of windows or inspecting glass fit after adjustments or replacements have been performed.

ALIGNMENT

Up and Down

Adjustment of the door can be made at either the pillar or door hinge halfs (Fig. 12).

Fore and Aft

Adjustment is made at the door hinge half. **Adjust only one hinge at a time.** Raising outer end of door moves upper part of door forward, when in closed position. Lowering lower part of door moves lower part forward, when in closed position.

In and Out

Adjustment is made at the pillar hinge half. **Adjust only one hinge at a time.** Raising outer end of door, moves upper part of door into door opening. Lowering outer end of door, moves lower part of door into door opening.

DOOR LATCH AND STRIKER PIN

The front door cannot be locked until the door is completely closed. The silent type door latch (Fig. 13) features a rubber isolation of the round striker pin on the door frame and those surfaces acting as stops inside the latch. The latch assembly is built into a sheet metal pocket on the door face. The striker pin is attached by a single screw which also allows for adjusting. Torque the striker pin screw 30-70 foot-pounds.

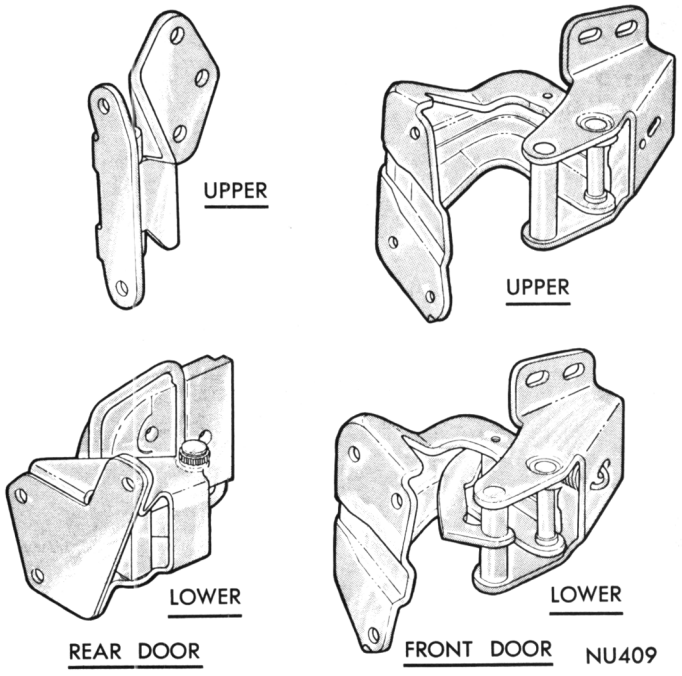

Fig. 12—Door Hinges

DOOR REPLACEMENT

Front Door (All Models)

Removal

(1) With door wide open, place a jack, with a block of wood on lifting plate of jack, as near hinge as possible.

(2) Remove door interior trim and hardware.

(3) Scribe a line around upper and lower hinge plates on door panel.

On vehicles with electric windows, disconnect the wires from window regulator motor and remove from door assembly.

(4) Remove hinge screws from door and remove door for further disassembly if necessary.

Installation

(1) With door hardware installed, place door, supported by a padded jack, in position in door opening.

(2) Position hinge plates on door panel and install screws finger tight only.

(3) Adjust jack to align hinge plate scribe marks and tighten screws.

Prior to this installation, on electric window lifts, install wiring in doors and attach to motor and control switch.

(4) Complete door aligning procedure, and install interior trim and hardware.

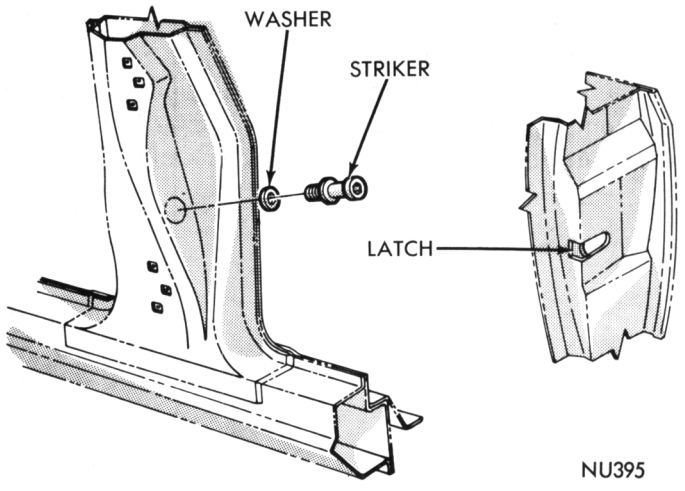

Fig. 13—Door Latch and Striker Pin

REAR DOOR (All Models)

Removal

(1) Open door and place a padded jack under door near the hinges.

(2) Remove door interior trim and hardware.

(3) Scribe aligning marks around hinge plates on door frame.

On vehicles with electric window lifts disconnect wires from motor and switch and remove from door.

(4) Remove the hinge screws from door and remove door.

Installation

On vehicles with electric window lift, attach wiring to motor and switch prior to installation of trim panel.

(1) With inner hardware installed and supported on a padded jack, position door on hinges.

(2) Install attaching bolts finger tight.

(3) Align hinges with scribe marks and tighten screws.

(4) Test door for alignment and install trim and hardware.

HINGE REPLACEMENT

The door hinges (Fig. 12) are attached to the doors by screws accessible from outside. The front door hinges are each attached to the "A" post by three screws.

The rear door upper hinges (on hardtop and station wagon models), are attached to the "B" post by three screws accessible from the outside. On sedan models, the screws are accessible through an access hole in the "B" post.

INSIDE HANDLES

Window Regulator Handle

The window regulator handles are retained on the shaft with an allen set screw (Fig. 14).

The handles should be placed in approximately a horizontal position with the knobs facing forward on the doors and rearward on the quarter panel.

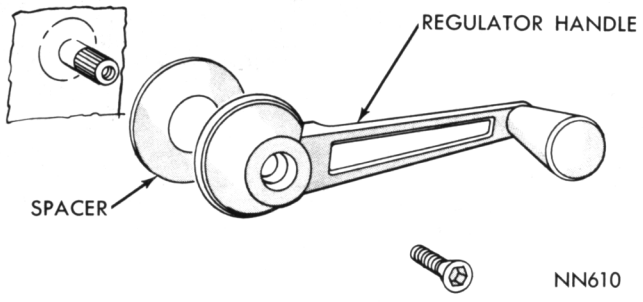

Fig. 14—Window Regulator Handle

Remote Control Handle

The remote control handle (Fig. 15) is attached to the control unit with a screw at the rear inner end.

ARM RESTS

The arm rests are retained by two metal screws inserted at the bottom of the arm rest base. The pad and base can be separated and if necessary, the pad may be retrimmed.

TRIM PANELS

Door Trim Panel Replacement

(1) Remove inside handles and arm rests.

(2) Remove screws attaching trim panel to door inner panel.

(3) Insert a wide blade screw driver next to the retaining clips between trim panel and door frame. Snap retaining clips out of door panel and remove panel.

(4) Before installing trim panel, inspect condition of watershield (Fig. 16).

(5) Align trim panel retaining clips with holes of door frame and bump into place with heel of hand.

(6) Install trim panel to door screws, escutcheon washer, handles and arm rest.

WATERSHIELDS

Refer to Figure 16 for sealing areas and applications of watershields. The lower edge of shield must be inserted into the slots in bottom of inner panels.

LOCK ASSEMBLY (Manual)

Remote Control

Removal

(1) Raise door glass.

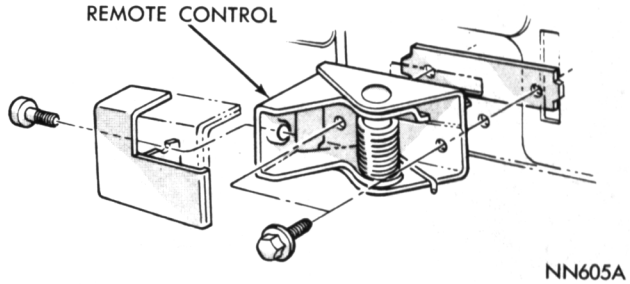

Fig. 15—Remote Control Handle

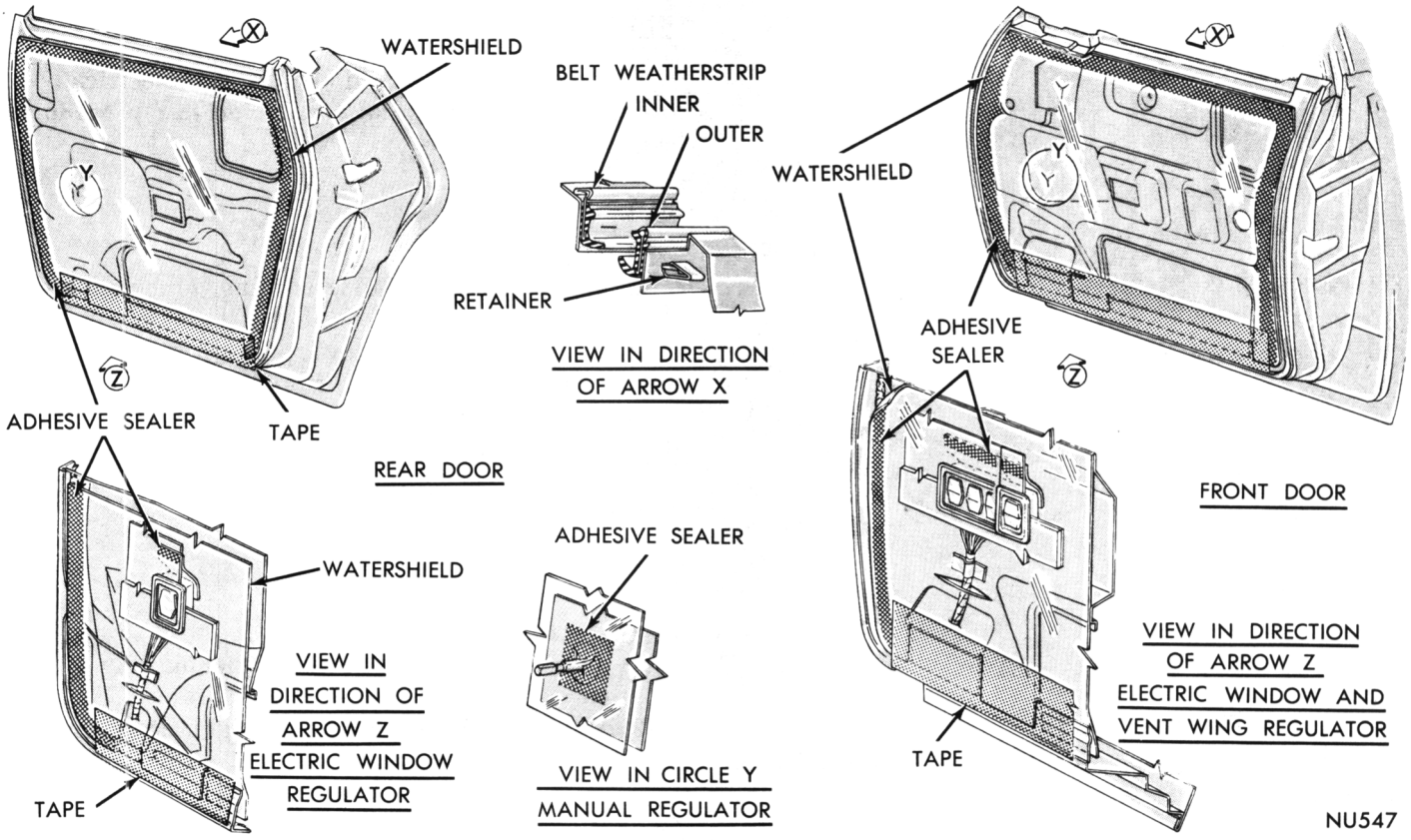

Fig. 16—Door Watershields

(2) Remove remote control base to door panel screws (Fig. 15).
(3) Remove link from remote control lever.
(4) Remove control through large opening in door.

Installation

(1) Apply lubriplate to sliding and contact areas.
(2) Install assembly through door opening and connect link to control lever.
(3) Install attaching screw and test operation or control.

LATCH REPLACEMENT

Removal

(1) Disconnect handle to latch link (Fig. 17) from latch by pulling link outward.
(2) Disconnect locking lever rod (front door only) from latch.
(3) Disconnect control rod from latch.
(4) Remove latch to door screws.
(5) Rotate latch and disconnect remote control link when removing.
(6) Lubricate all moving points of latch.

Installation

(1) Position lock in door, connect remote control link to lock lever and install retaining screws.
(2) Connect handle to lock link and locking lever rod (front door only) to lock assembly.
(3) Connect locking lever rod and remote control link to lock.

LOCK CYLINDER

Removal

(1) With window in up position, disconnect cylinder link (Fig. 18) from clip on lock lever and from cylinder.

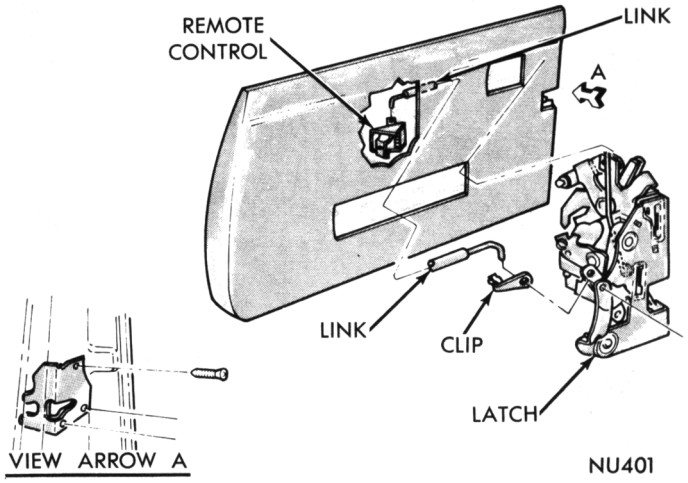

Fig. 17—Door Lock and Control

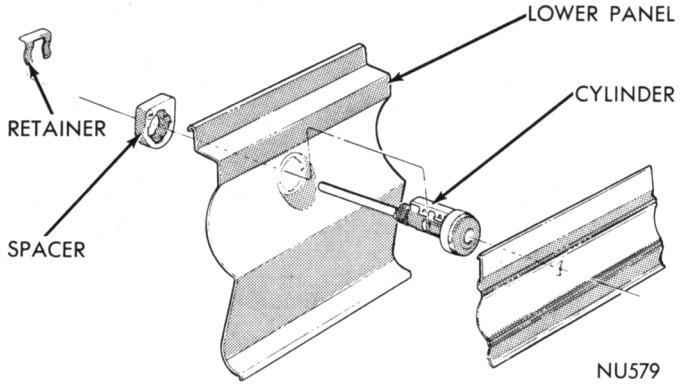

Fig. 18—Door Lock Cylinder

(2) Remove retainer from cylinder body and cylinder from door.

Installation

(1) Position cylinder in door and install retainer.
(2) Connect cylinder link to cylinder arm and to clip on lock lever.

Latch Push Rod

The latch push rod (Fig. 19) is positioned through an opening in the door belt area approximately at the front end of the arm rest position on 2 door models. On 4 door models the push rod is located approximately above the latch (Fig. 18).

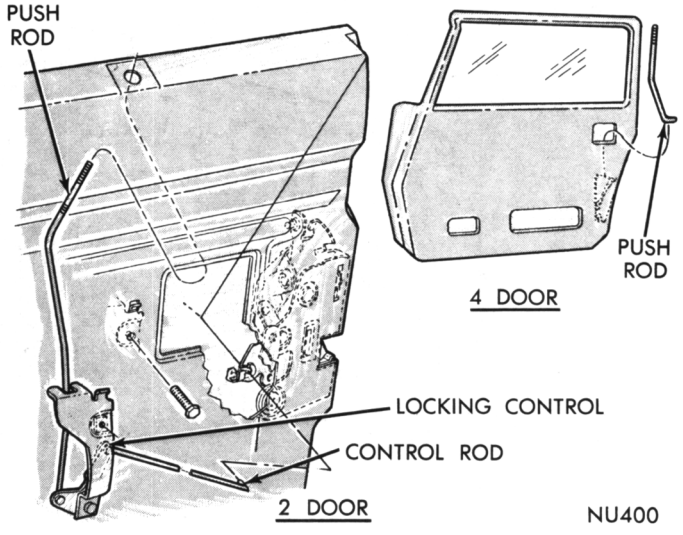

Fig. 19—Latch Push Rod

ELECTRIC DOOR LOCKS

All doors may be locked or unlocked electrically.

Refer to the Electrical Group for test procedures and wiring diagrams.

SOLENOID

Adjustment

(1) Loosen solenoid to mounting bracket screws (Fig. 20).
(2) Push lock lever to down position and slide solenoid to full down position in mounting bracket.
(3) Raise lock lever to up position, extending solenoid rod to maximum up position.
(4) Tighten solenoid to mounting bracket screws and test operation of lock.

REPLACEMENT

Removal

(1) Disconnect solenoid link at solenoid (Fig. 20).
(2) Remove solenoid lead wires.
(3) Remove solenoid to mounting bracket screws and remove solenoid assembly.

Installation

(1) Position solenoid on mounting bracket and install mounting screws. DO NOT TIGHTEN.
(2) Connect link to solenoid rod and connect wires.
(3) Adjust lock assembly.

Lock and Switch Replacement

(1) Disconnect lock switch wires (front door only).
(2) Disconnect solenoid link at lock lever.
(3) Remove screws attaching lock and switch assembly to door and remove from door.
(4) Remove switch from lock assembly.

Installation

(1) Position key actuated switch on lock assembly and install screw.
(2) Position lock and switch assembly on door inner face and install screws.
(3) Connect solenoid link to lock lever.
(4) Connect lock switch wires (front door only) and test lock operation.

Remote Control Switch Replacement

The remote control switch (front doors only) (Fig. 19) is attached to the door inner face with one screw. The remote control push rod is attached to the switch with a "push-on" type retainer.

OUTSIDE HANDLE—FRONT DOOR

Removal

(1) With door glass in up position, remove handle

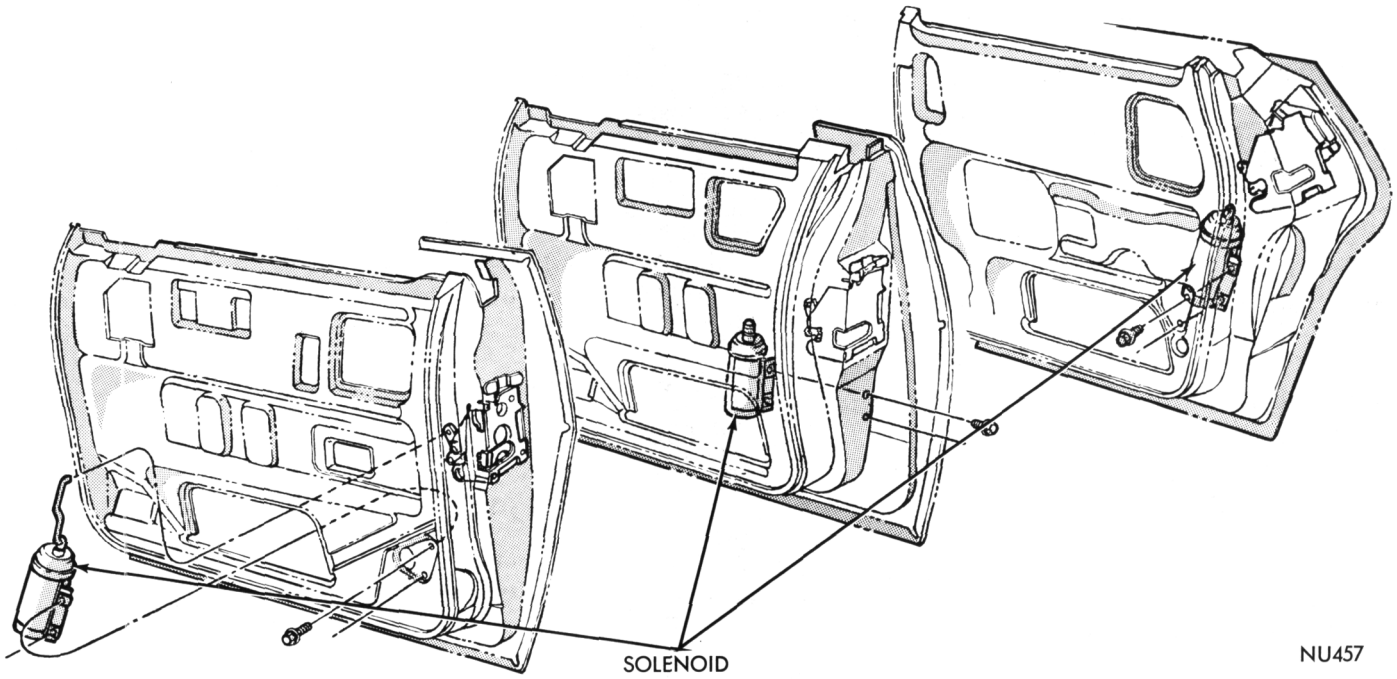

Fig. 20—Solenoid Attachments

attaching nuts from mounting studs F(ig. 21) and link from handle to lock.

(2) Lift handle up and remove from door.

Installation

(1) Position handle into door opening and engage handle to lock link.

(2) Attach retaining nuts and test handle operation.

OUTSIDE HANDLE—REAR DOOR

Removal

(1) With door open and glass in up position, remove link retainer at handle connector (Fig. 21).

(2) Depress outside handle release button and remove link from handle connector.

(3) Remove handle to door nuts.

Installation

(1) Position handle in door and install mounting nuts.

(2) Depress handle button and position link over connector on handle.

(3) Install retainer over link and connector.

WEATHERSTRIPS AND WINDCORDS

Door Weatherstrips

Make sure all old weatherstrip particles and cement are removed. **Avoid puckering or stretching of weatherstrip.**

Sedan and Station Wagon Models

(1) Apply lower half of weatherstrip, starting at number one index hole and using fasteners for locating and ending at number 2 index hole.

(2) Apply a 1/8 inch bead of cement to weatherstrip seating area on door upper half.

(3) Install upper half of weatherstrip on door, indexing at the upper corners.

(4) Work weatherstrip from index points to a point midway between them.

Hardtop-Convertible

Front Door

(1) Apply a 1-8 inch bead of cement on weatherstrip.

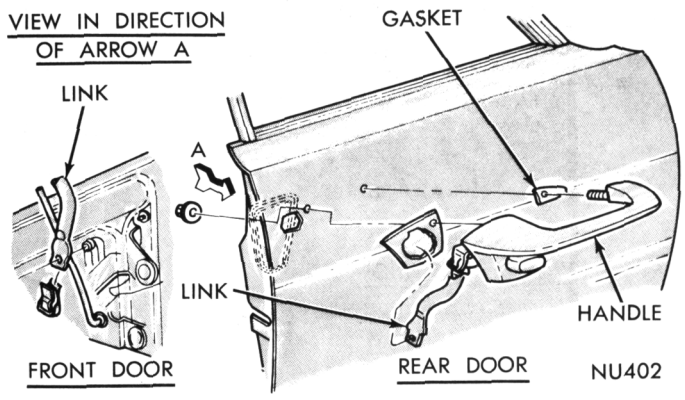

Fig. 21—Outside Door Handle

(2) Position and attach moulded end of weatherstrip with fasteners.

(3) Index and install weatherstrip on door, using fasteners as a locating point and working from hinge pillar side of door completely around to lock pillar.

(4) Make sure lip of weatherstrip dovetails into groove of lock pillar seal and install seal on lock pillar.

Hardtop Rear Door

(1) Index and install weatherstrip on door by inserting fasteners in door and install from top of hinge pillar side of door completely around to lock pillar.

(2) Make sure lip of weatherstrip dovetails into groove of hinge pillar seal and install seal.

(3) Make sure lip of weatherstrip dovetails into groove of door upper ornament seal and install seal.

Roof Rail Weatherstrip

Refer to Figure 22 for attaching points and methods of cementing.

The weatherstrip retainers are adjustable through use of elongated attaching holes. The weatherstrip can be moved in or out for the best possible fit and seal along the top edge of the vent frame, door and quarter glass.

The glass up-stop must be adjusted so a fully raised glass just curls the outer lip of weatherstrip against the inner lip.

When the up-stop, roof rail weatherstrip and glass are properly adjusted, the outer lip of weatherstrip will seal along the top edge of the glass and the inner lip of weatherstrip will seal along the upper inside edge of glass.

Outer Belt Weatherstrip

The door outer belt weatherstrips are retained in the door panel with spring type retainers.

Windcords

Refer to Figure 23 for windcord starting points and method of attachment.

GLASS ADJUSTMENTS

The circled numbers shown on the glass adjustment reference illustrations indicate the particular step number being read in the adjustment procedure.

Prior to adjusting glass, all doors must be correctly fitted in their opening and the weatherstrips at the "A" post and roof rails must be properly installed.

Refer to the adjustment illustration and loosen the attaching screws and nuts of the various door components affecting glass adjustment.

Service procedures for components related to the door or vent wing glass follow the glass adjustment procedures.

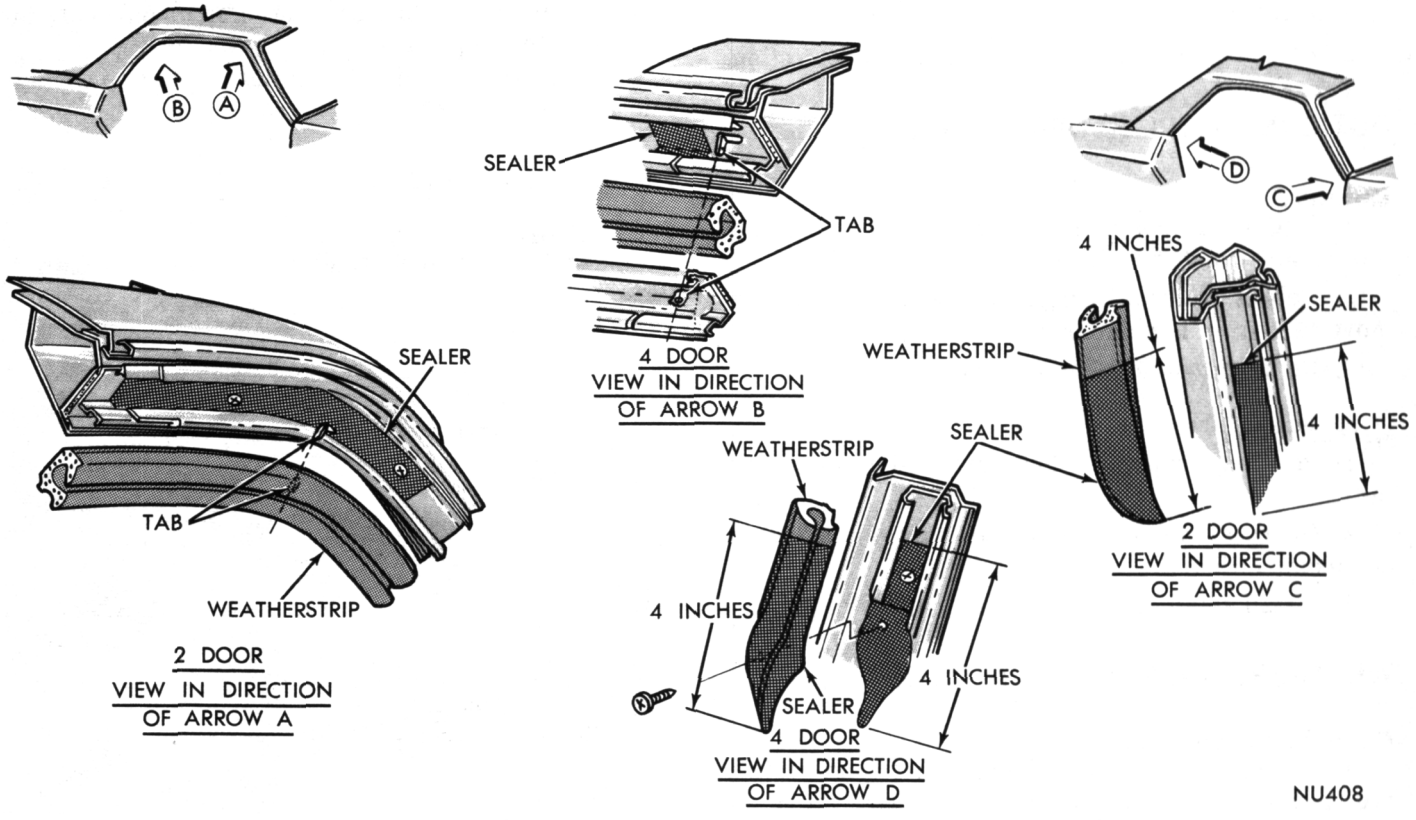

Fig. 22—Roof Rail Weatherstrip

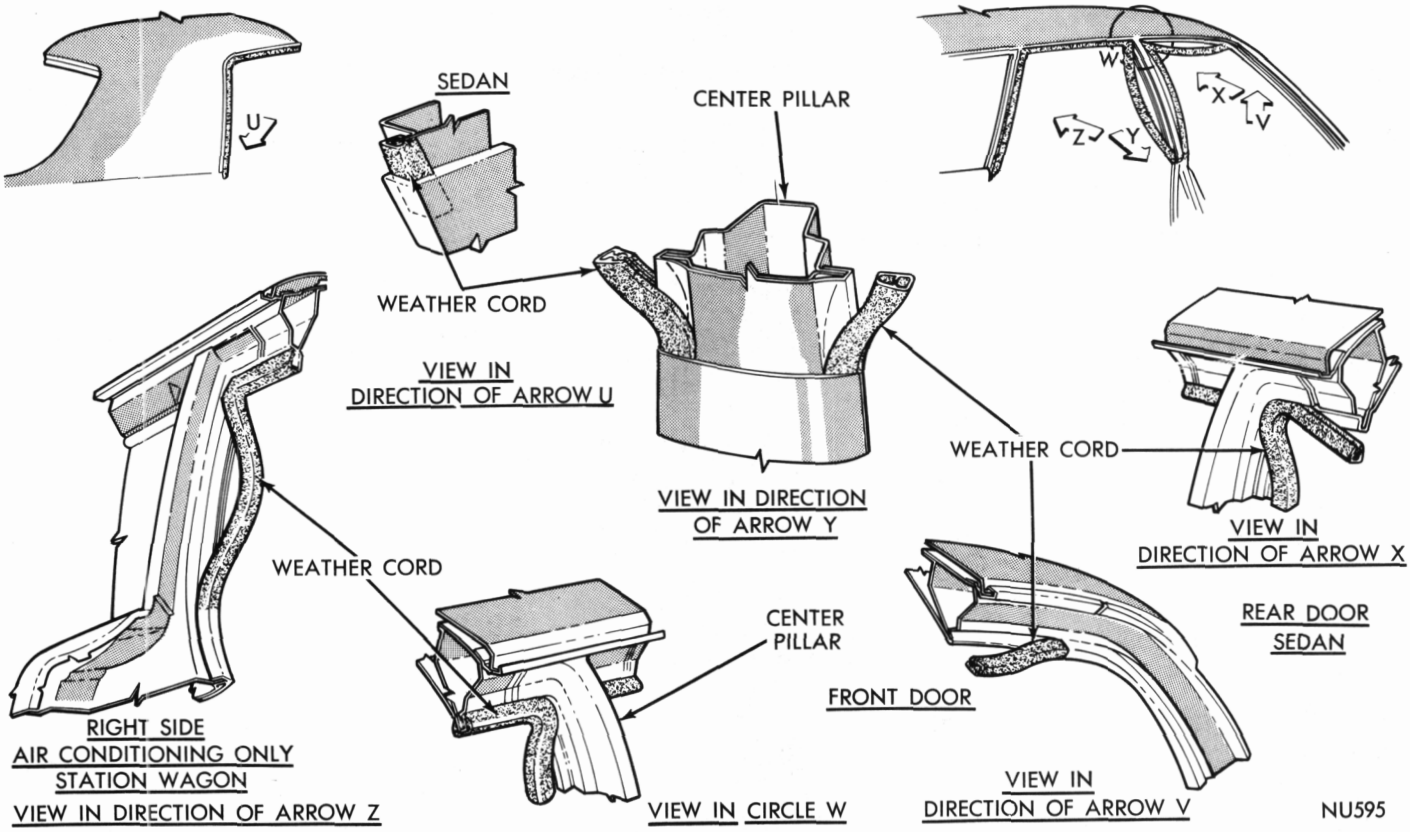

Fig. 23—Door Windcords

GLASS ADJUSTMENTS 2 DOOR HARDTOP

Adjustments-Ventless Door (Fig. 24)

Fore and Aft

(1) Raise glass completely.

(2) Move glass fore or aft to set glass to belt line weatherstrip.

(3) Tighten glass track upper bracket at belt line.

Parallelism of Glass to Primary Seal

(4) Move pivot bracket fore or aft and set glass parallel to weatherstrip locating bead at primary sealing lip.

(5) Tighten pivot bracket and support screw assemblies.

(6) Set front up-stop down against bumper on glass.

(7) Tighten up-stop bracket screw on inner panel (Fig. 25).

(8) Set rear channel up-stop wedge down against stop in rear frame.

(9) Tighten rear channel and bracket upper attachment screw.

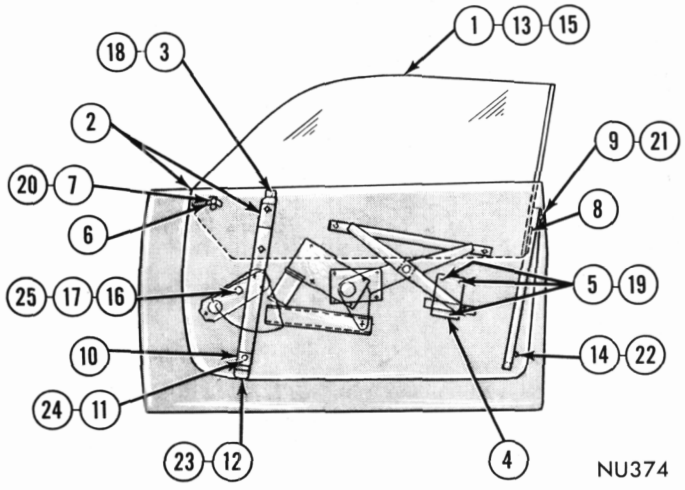

Fig. 24—Glass Adjustments 2 Door Hardtop—Ventless

In-Out and Secondary Seal

(10) Move bottom of front track to create an effective glass to weatherstrip secondary seal.

(11) Tighten glass track to lower bracket screw.

(12) Tighten track lower bracket and retainer to inner panel nut assembly.

Front and Rear Track Parallelism

(13) Run glass approximately 2/3 way down.

(14) Tighten glass run rear channel and bracket assembly lower bracket nut assembly.

Down Stop-Manual

(15) Lower glass until top edges of glass is even with or slightly below belt line of door outer panel. **Do not allow glass to drop below weatherstrip on door outer panel.**

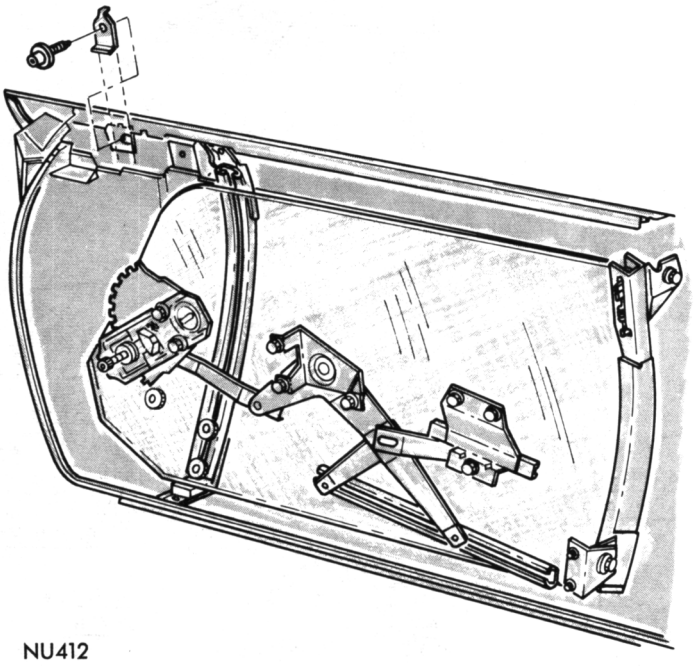

Fig. 25—Glass Up-Stops

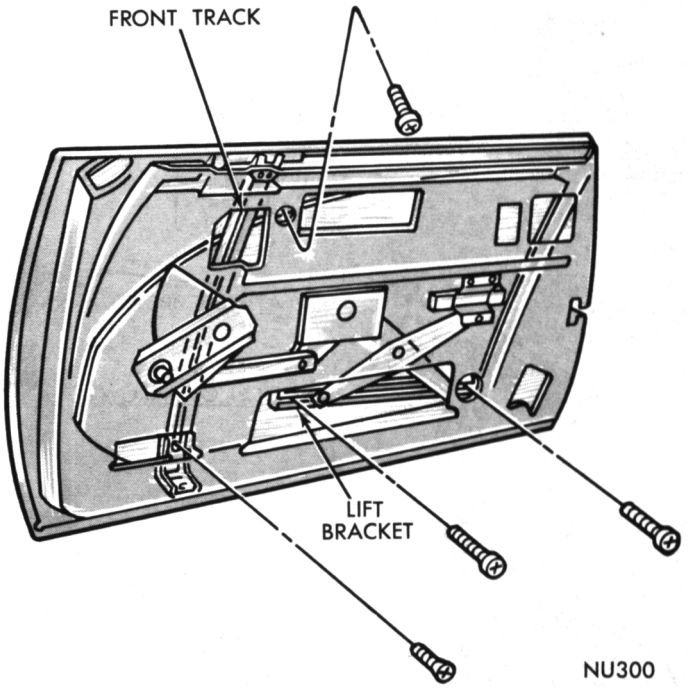

Fig. 26—Lift Bracket

(16) Position stop on regulator plate against stop on sector.

(17) Tighten regulator plate stop locknut. Tighten callouts 18 through 25 securely.

GLASS REPLACEMENT

Removal

(1) Remove door belt line weatherstrips.

(2) With regulator arms in the full down position, remove screws attaching lift bracket to glass (Fig. 26).

(3) Remove front track upper and lower bracket attaching screws.

(4) Raise door glass and front track assembly out of door (Fig. 27).

(5) Remove front track from glass guide and guide from glass (Fig. 28).

(6) Remove fasteners and up stop from glass (Fig. 28).

Installation

(1) Place glass on table with outside of glass facing upward.

(2) Install fasteners and up-stop in glass (Fig. 28).

(3) Position track guide over fasteners and secure with screw.

(4) Slide front track lower end flanges through guide grooves.

(5) With regulator arms in the full down position insert door glass and front track assembly into door.

(6) Allow track to slide down to bottom of door panel.

(7) After up-stop bumper has cleared through glass opening, engage glass rear frame in rear channel run and lower glass to bumper of lower adjusting bracket.

(8) Secure front track upper and lower mounting brackets wtih screws.

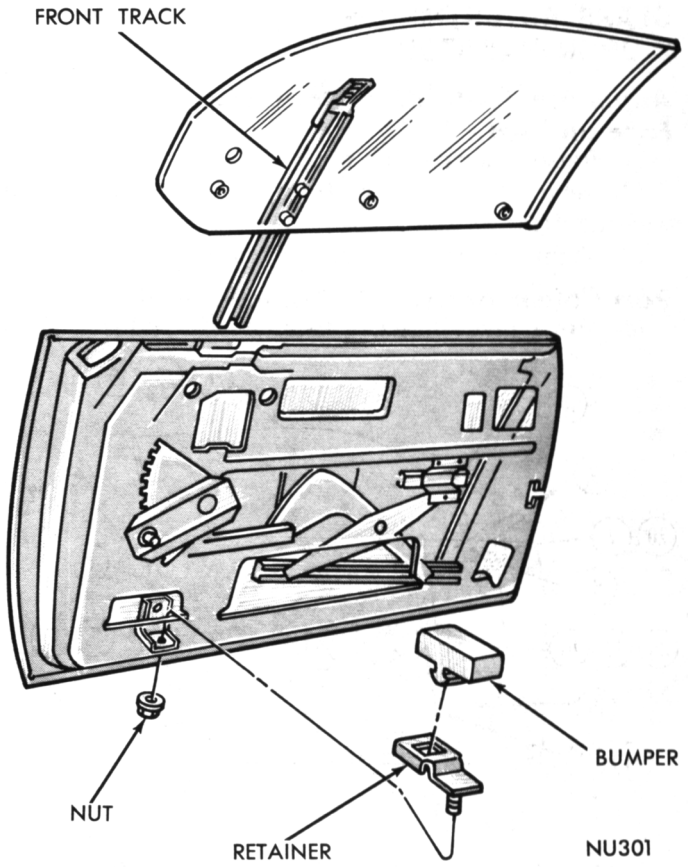

Fig. 27—Glass Replacement

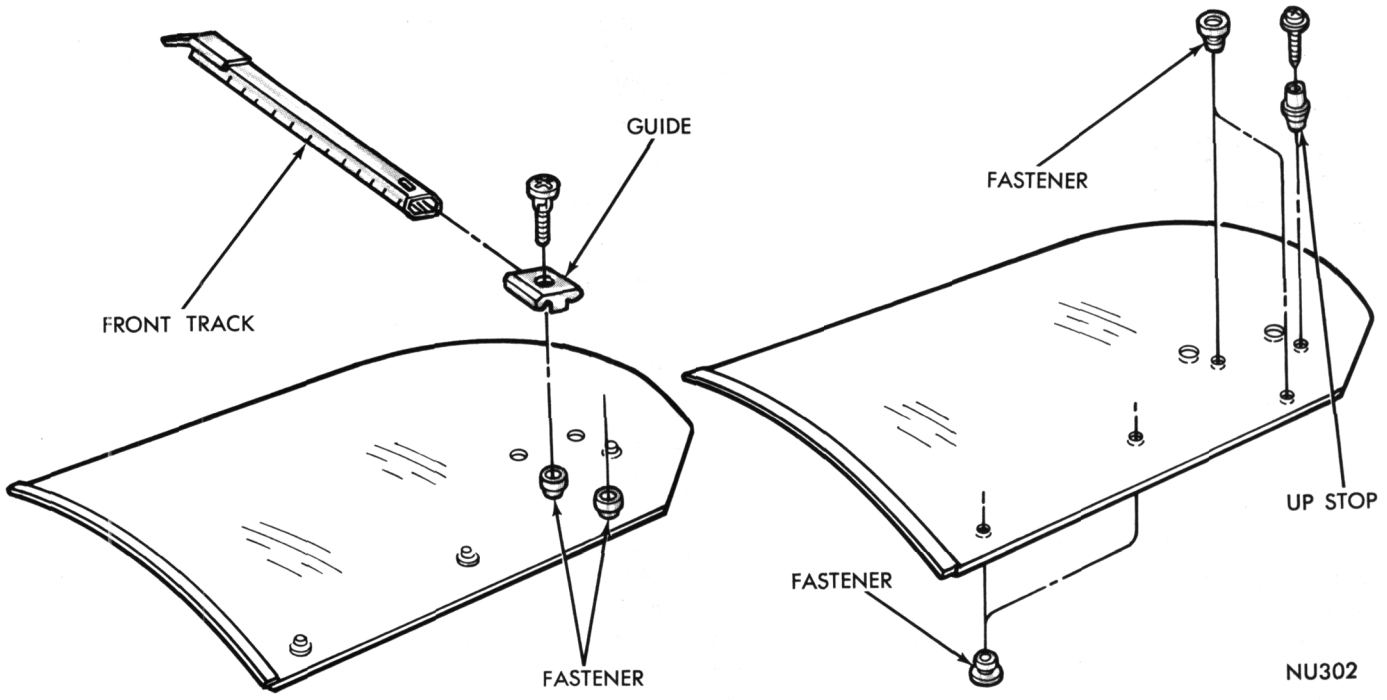

Fig. 28—Glass Assembly

(9) Align holes in lift bracket with fasteners in glass and secure with screws.

Glass Rear Track

Removal

(1) Remove the door glass and front track assembly.

(2) Remove screw attaching track upper bracket to door lock face and nut attaching track lower bracket to lower support (Fig. 29).

(3) Remove track assembly through large access hole in door panel.

Installation

(1) Position track assembly into door through large access hole.

(2) Align track upper bracket to hole in door lock face and install screw loosely.

(3) Insert track bottom bracket adjustment stud in slot of lower support bracket and install nut loosely.

(4) Install door glass assembly and tighten rear track screw and nut after adjusting glass.

UP-STOP

The glass up-stop (Fig. 25) is attached to the door outside panel belt reinforcement with a screw and washer assembly. Engage tab on stop with slot in reinforcement.

Glass Lift Bracket

The glass lift bracket (Fig. 30) is positioned over sliding blocks on the regulator arms. Screws are used to secure the lift channel to the glass fasteners. Lubricate the sliding block contact areas of the lift channel sparingly.

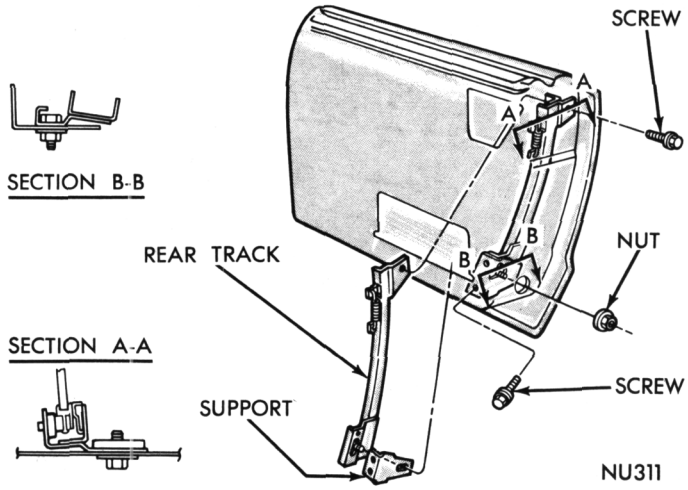

Fig. 29—Glass Rear Track

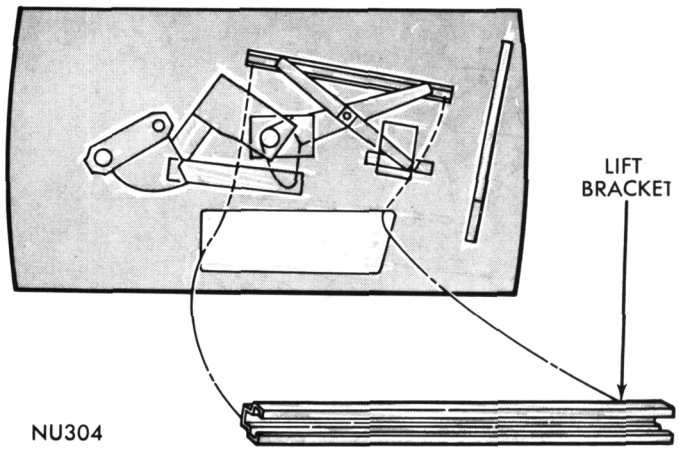

Fig. 30—Glass Lift Bracket

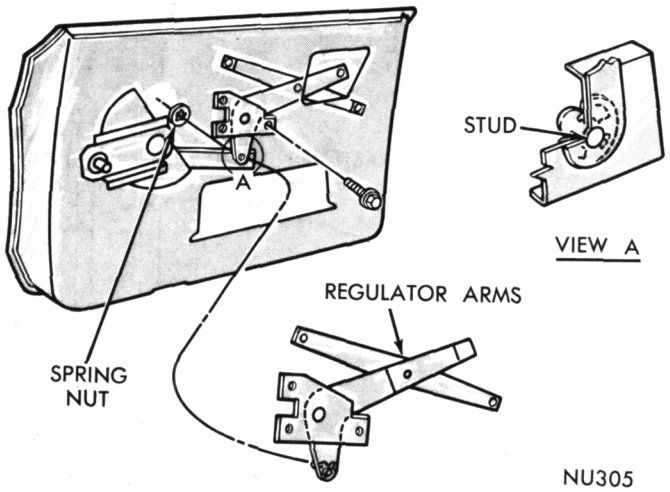

Fig. 31—Regulator Arms

Regulator Arms—Manual

The manually operated regulator incorporates a replaceable type arms assembly (Fig. 31). The arms assembly is retained on the inner door panel with screws and to the regulator connector link of the regulator with a spring nut. The door glass assembly should be removed when replacing the arms assembly.

Regulators

The manual and electric operated regulators (Fig. 32) are attached to the door inner panel with screws.

Refer to the Electrical Group for test procedures and wiring diagrams for electric operated regulators.

Pivot Bracket

The pivot bracket and support assembly (Fig. 33) is secured with screws to the electric regulator idler arm slide and to the door inner panel with the manual regulator.

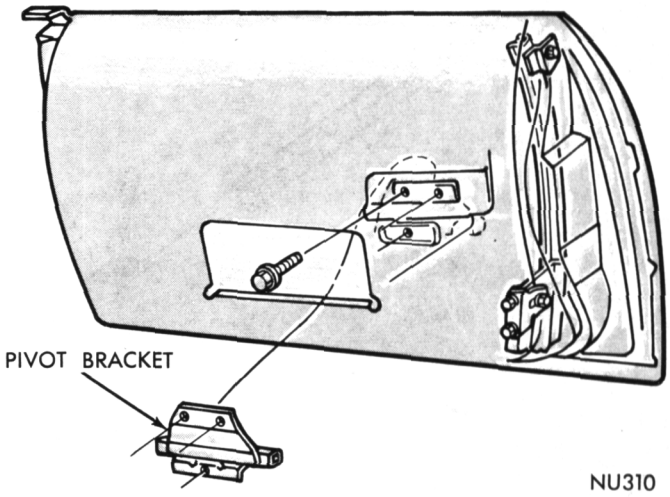

Fig. 33—Pivot Bracket

Regulator Motor Replacement

When necessary to remove motor from regulator, it is imperative the linkage be securely clamped in a vise to lock it in place. Failure to do this allows the assist spring to drive the mounting bracket around the lift pivot.

Window Lift Switch

Slide a thin blade behind the switch housing (front and back) to depress retaining clips and pull switch out from panel. Carefully separate multiple terminal block from switch body and remove switch from panel.

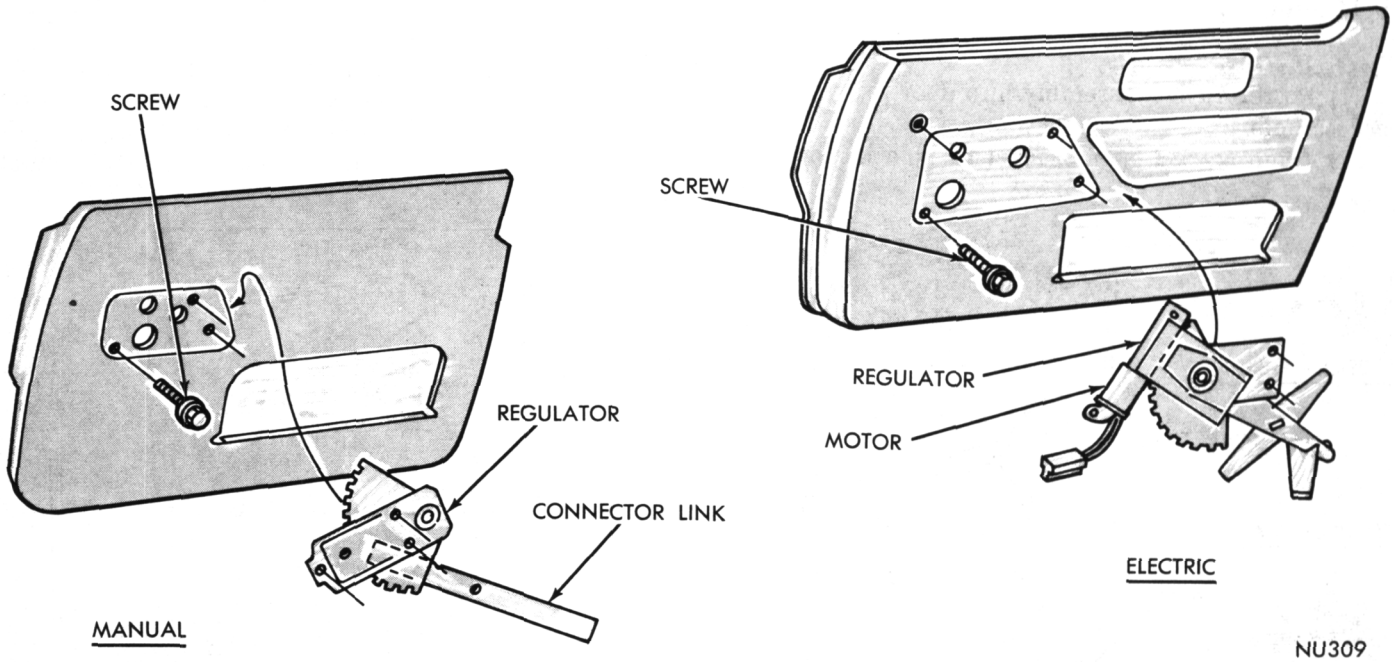

Fig. 32—Regulator Assemblies

2 DOOR MODELS and 4 DOOR HARDTOPS

Adjustments (With Vent Wing) (Fig. 34)

Primary Seal Adjustment (Fore-Aft-Up-Down)

(1) Lower glass fully and loosen vent wing screw on hinge face at belt line.

(2) Align and set vent wing to "A" post and roof rail weatherstrip.

(3) Snug secure vent wing screw at belt rear attachment and raise glass fully.

(4) Set top edge of glass parallel to line up bead on roof rail weatherstrip.

(5) Snug secure vent wing screw on hinge at belt line.

Parallelism to Belt Outer Weatherstrip

(6) Run glass approximately 1/3 way down.

(7) Adjust rear run channel upper attachment so glass lightly touches on outer weatherstrip and up stop bracket on rear channel is in full up position.

(8) Snug secure rear run channel upper attachment screw.

In-Out Adjustment at Top of Glass and Secondary Seal

(9) Raise glass fully.

(10) Back out adjusting stud on vent wing leg until shoulder bottoms out against door panel reinforcement and a parallelism exists between glass edge and roof rail weatherstrip.

(11) Loosen nut assembly on vent wing leg adjusting stud.

(12) Force vent wing leg outboard until secondary seal is accomplished between glass and roof rail weatherstrip.

(13) Snug secure nut assembly and screws loosen to perform adjustment.

(14) Loosen rear channel upper bracket screw assembly.

(15) Position up-stop on rear channel down against plastic bumper on glass and snug secure screw assembly.

Division and Rear Channel Parallelism

(16) Loosen rear channel lower attachment nut assembly.

(17) Run glass approximately 3/4 way down.

(18) Snug secure channel lower bracket nut assembly.

Manual Down Stop

(19) Loosen stop lock nut on regulator plate.

(20) Lower glass until top of glass is even with or slightly below door outer panel belt line. **Do not allow glass to drop below outer weatherstrip.**

(21) Position regulator plate stop against stop on sector snug secure nut assembly.

(22) Operate window up and down testing for ease of operation and inspecting alignment.

Cranking effort at the regulator handle should not exceed 30 inch pounds with door closed and all glass in the up position.

Tighten callouts 23 through 29 securely.

DOOR GLASS AND VENT WING REPLACEMENT

Removal

(1) Remove nut and washer from end of division bar adjusting rod (Fig. 35).

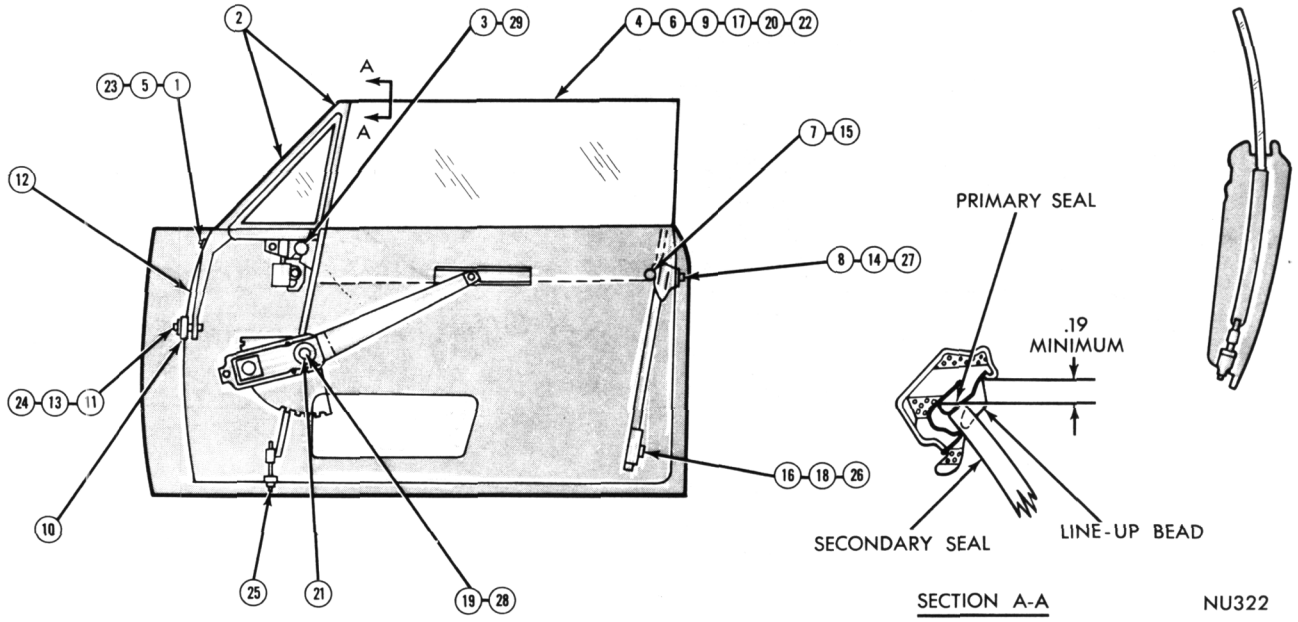

Fig. 34—2 Door Models and 4 Door Hardtop—Glass Adjustments

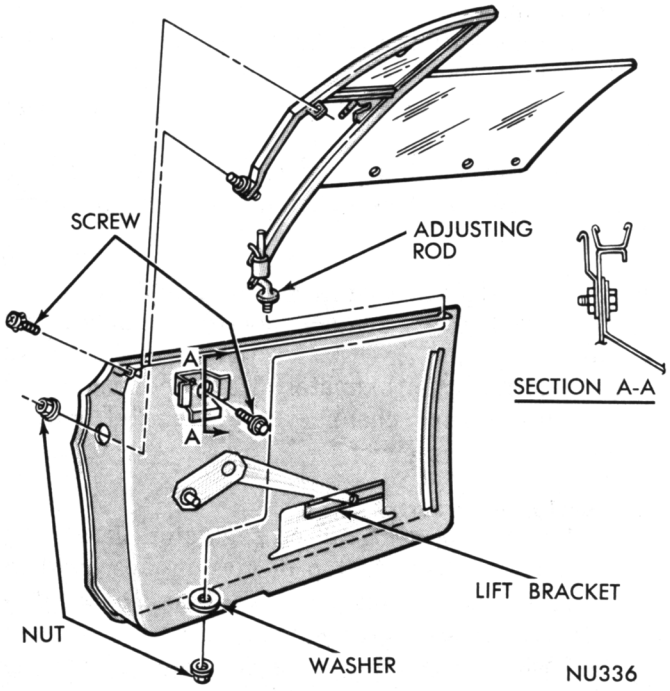

Fig. 35—Glass Replacement

(2) Remove vent frame to belt spacer reinforcement screw.

(3) Remove vent wing adjusting stud to upper hinge nut assembly and vent wing to belt attaching screw.

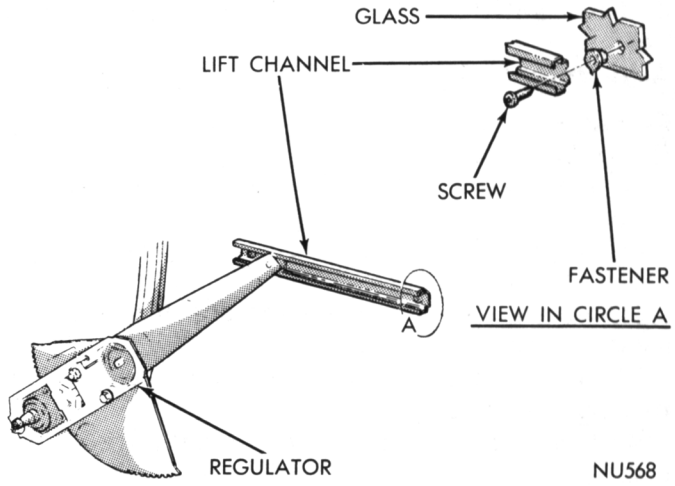

Fig. 36—Lift Bracket

(4) Remove lift channel to door glass fastener screws (Fig. 36).

(5) Tilt top of glass inward and remove door glass and vent wing assembly.

Disassembly

(1) Invert door glass and vent wing assembly.

(2) Remove vent wing adjusting stud at hinge reinforcement (Fig. 37).

(3) Remove lower adjusting stud and anti-rattle from division channel.

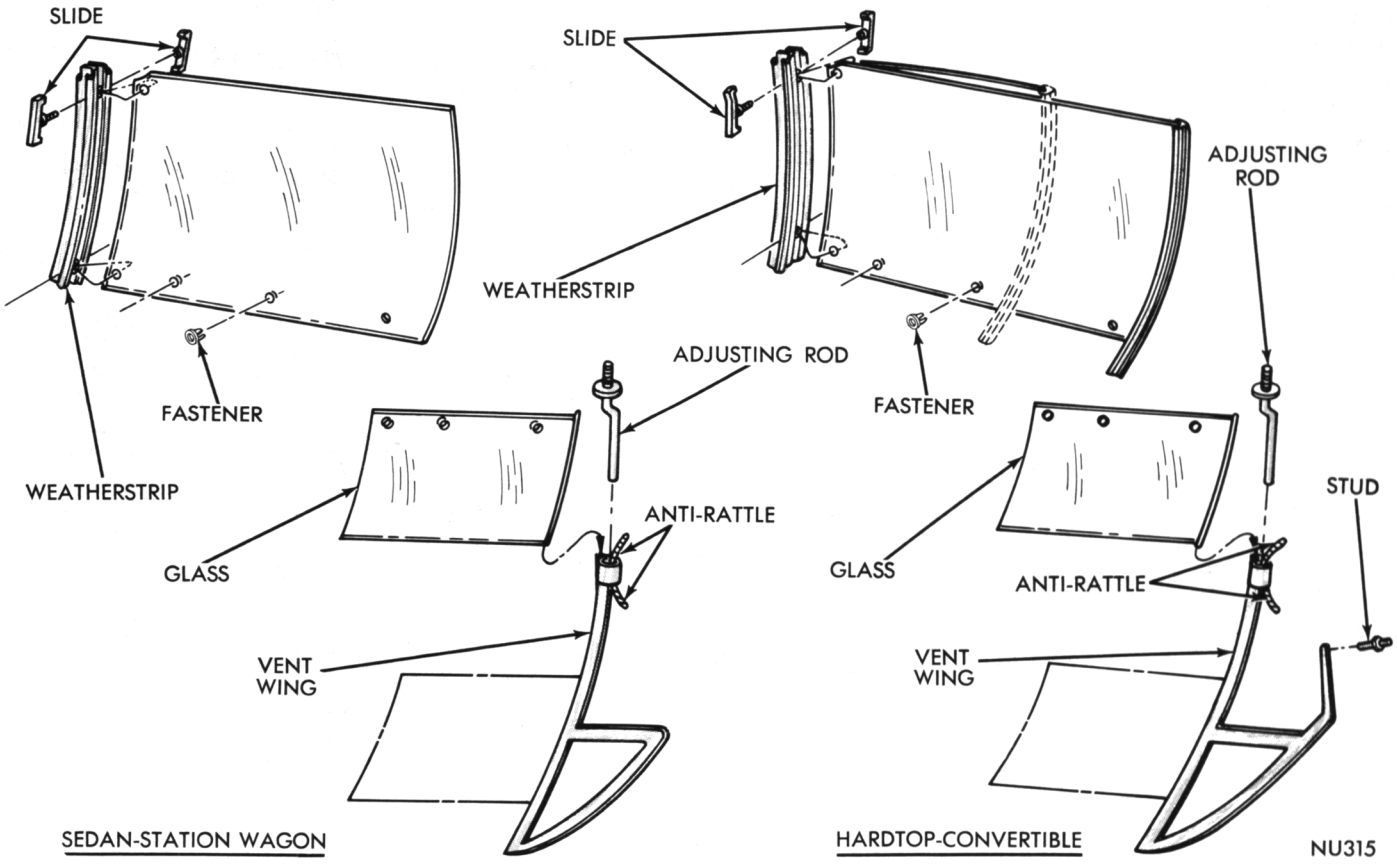

Fig. 37—Glass Assembly

(4) Slide door glass assembly out of vent wing division channel.

(5) Remove slide assembly from glass and weatherstrip (Fig. 36) by pulling slide halves apart.

(6) Remove weatherstrip from glass.

(7) Push lift channel fasteners out of glass.

Assembly

(1) Insert lift channel fasteners into glass from concave side (Fig. 37).

(2) Position weatherstrip on glass front edge with notched end in up position.

(3) Raise edge of weatherstrip and insert slide at attaching in glass. Secure by pressing together.

(4) With glass and vent wing in inverted position (Fig. 36) insert slides on glass assembly into vent wing division channel.

(5) Insert anti-rattle into division channel adjusting bracket loop opposite loop joint.

(6) Insert smooth end of adjusting rod into bracket loop between anti-rattle and loop joint.

(7) Install adjusting stud to vent wing hinge loosely.

(8) Apply rubber lubricant sparingly to each side of vent wing belt weatherstrip lip for entire length.

Installation

(1) Insert division channel through upper lock face corner, turn as necessary and move assembly forward.

(2) Tilt glass top inward, raising the off-set front lower leg to clear spacer bracket at belt.

(3) Insert lowest point of front leg and adjusting stud and lower assembly into door, with the pivot assembly mounting plate between the spacer bracket and door outside panel reinforcement.

(4) Position adjusting stud on lower off-set leg to hole in door hinge pillar and push through to stud shoulder.

(5) Fit rear edge of glass in run channel.

(6) Align vent wing lower pivot plate slot with access hole in inner panel and spacer bracket and with attaching hole in spacer bracket. Secure with screws.

(7) Position washer on division bar adjusting rod and insert adjusting rod into lower support.

(8) Install nut assembly on adjusting rod.

(9) Position and secure vent wing at front belt attachment with a screw and adjusting stud with a nut and washer assembly.

(10) Align glass fasteners with holes in lift channel and secure with screws.

REAR CHANNEL AND UP-STOP

Removal

(1) Remove up-stop at rear channel.

(2) Remove the door glass and vent wing assembly.

(3) Remove channel upper support retaining screw at door lock face, inner panel support and lower support retaining nut (Fig. 38) at door.

(4) Remove channel assembly through large access hole.

Installation

(1) Position rear channel assembly into door through large access hole.

(2) Align upper support to hole in door lock face and install screw loosely (Fig. 38).

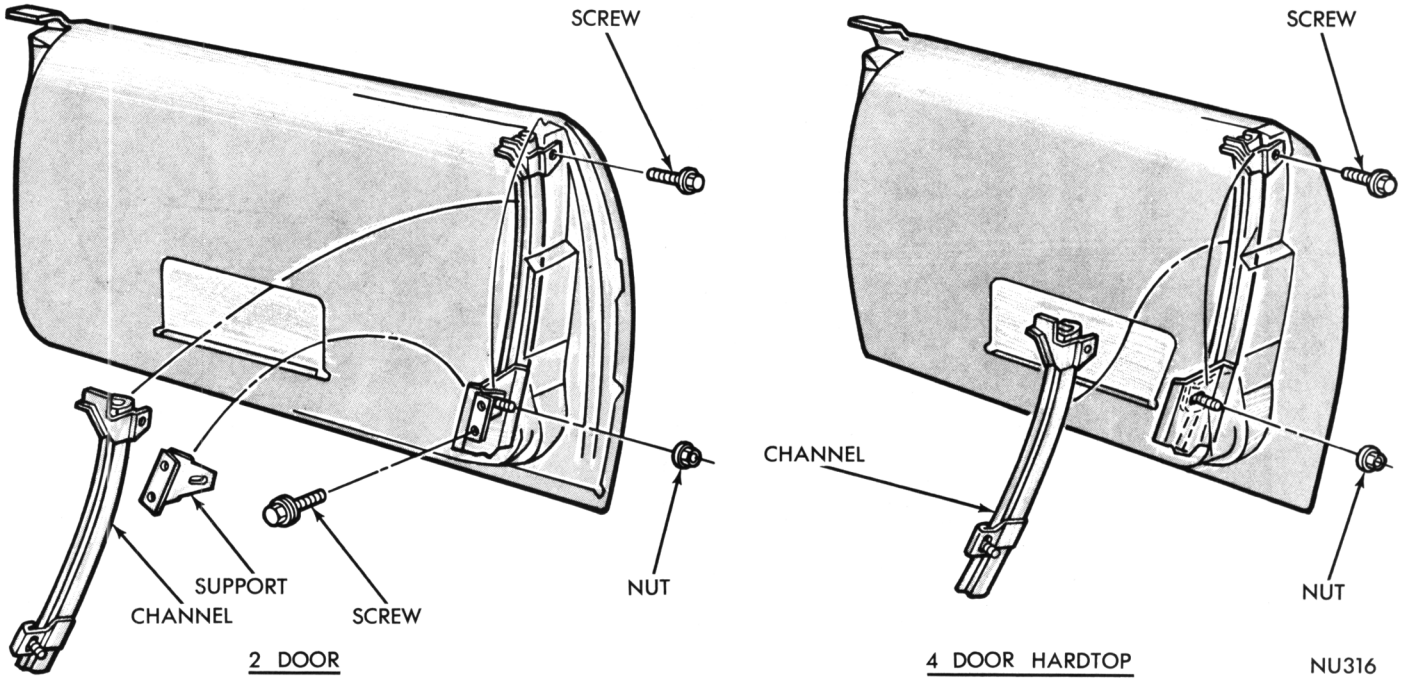

Fig. 38—Glass Rear Channel

(3) Insert channel lower stud into slot of support assembly and secure with nut.
(4) Tighten upper support screw.
(5) Install door glass.
(6) Install up-stop at rear channel.

DOOR GLASS REGULATOR

The manual and electric operated regulators (Fig. 39) are attached to the door inner panel with screws.

Refer to the Electrical Group for test procedures and wiring diagrams for electric operated regulators.

Glass Lift Bracket

The glass lift bracket (Fig. 40) is positioned over sliding blocks on the regulator arms. Screws are used to secure the lift channel to the glass fasteners. Lubricate the sliding block contact areas of the lift channel sparingly.

Regulator Motor Replacement

When necessary to remove motor from regulator, it is imperative the linkage be securely clamped in a vise to lock it in place. Failure to do this allows the assist spring to drive the mounting bracket around the lift pivot.

Window Lift Switch

Slide a thin blade behind the switch housing (front and back) to depress retaining clips and pull switch out from panel. Carefully separate multiple terminal block from switch body and remove switch from panel.

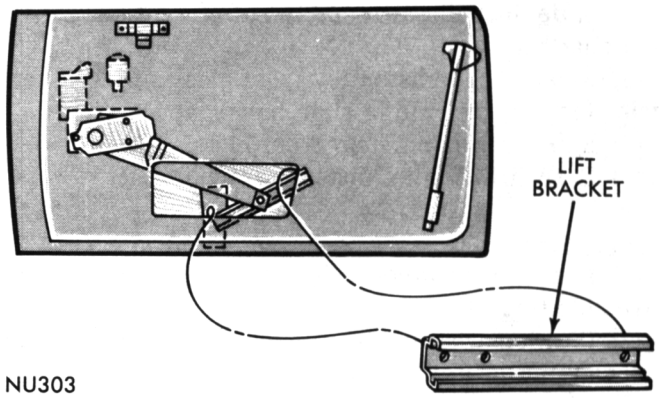

Fig. 40—Lift Bracket

VENT WING REGULATOR

Removal

(1) With vent wing open, remove screws attaching regulator to door inner panel belt reinforcement (Fig. 41).
(2) Remove shaft to coupling screw.
(3) Move regulator off of vent wing pivot shaft.
(4) Remove regulator through large access hole in door panel.

Installation

(1) Through large access hole, position and align sleeve on regulator coupling over vent wing pivot shaft.
(2) Position and align regulator body to attaching slots in door inner panel belt reinforcement and install attaching screws.
(3) Install regulator coupling to vent wing pivot shaft screw.

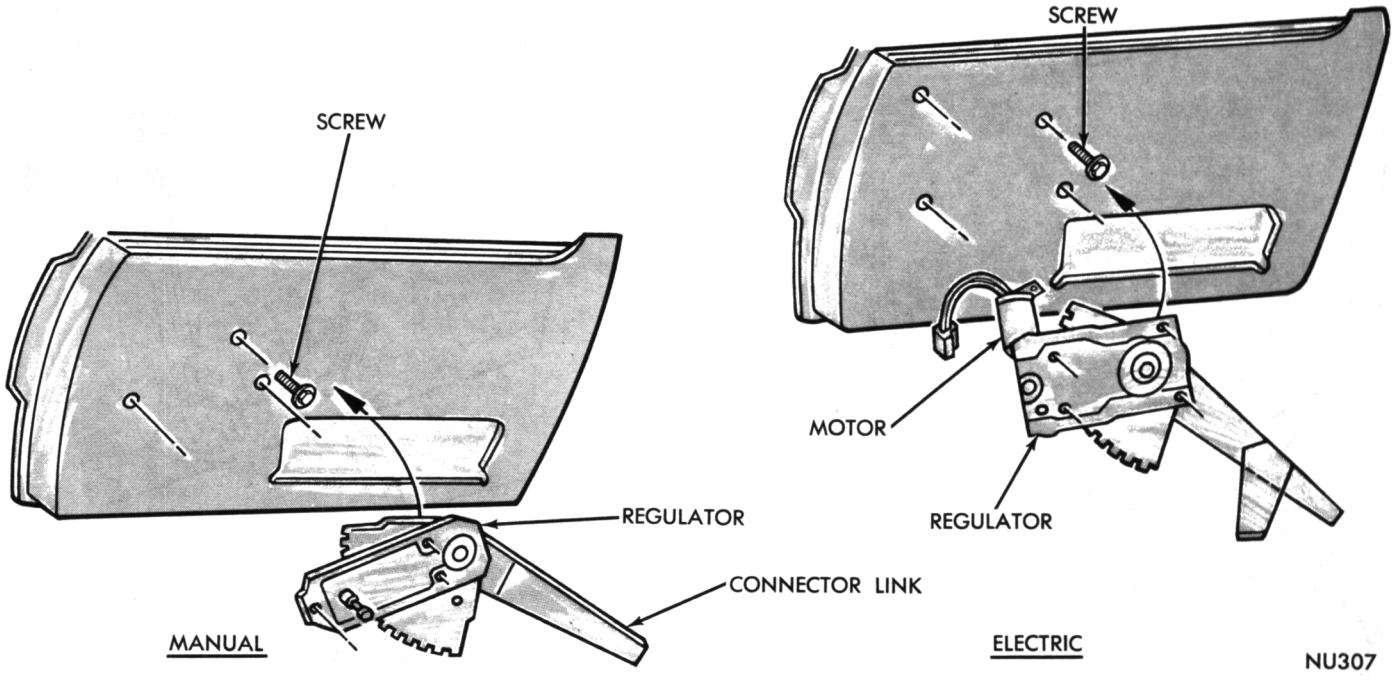

Fig. 39—Regulator Assemblies

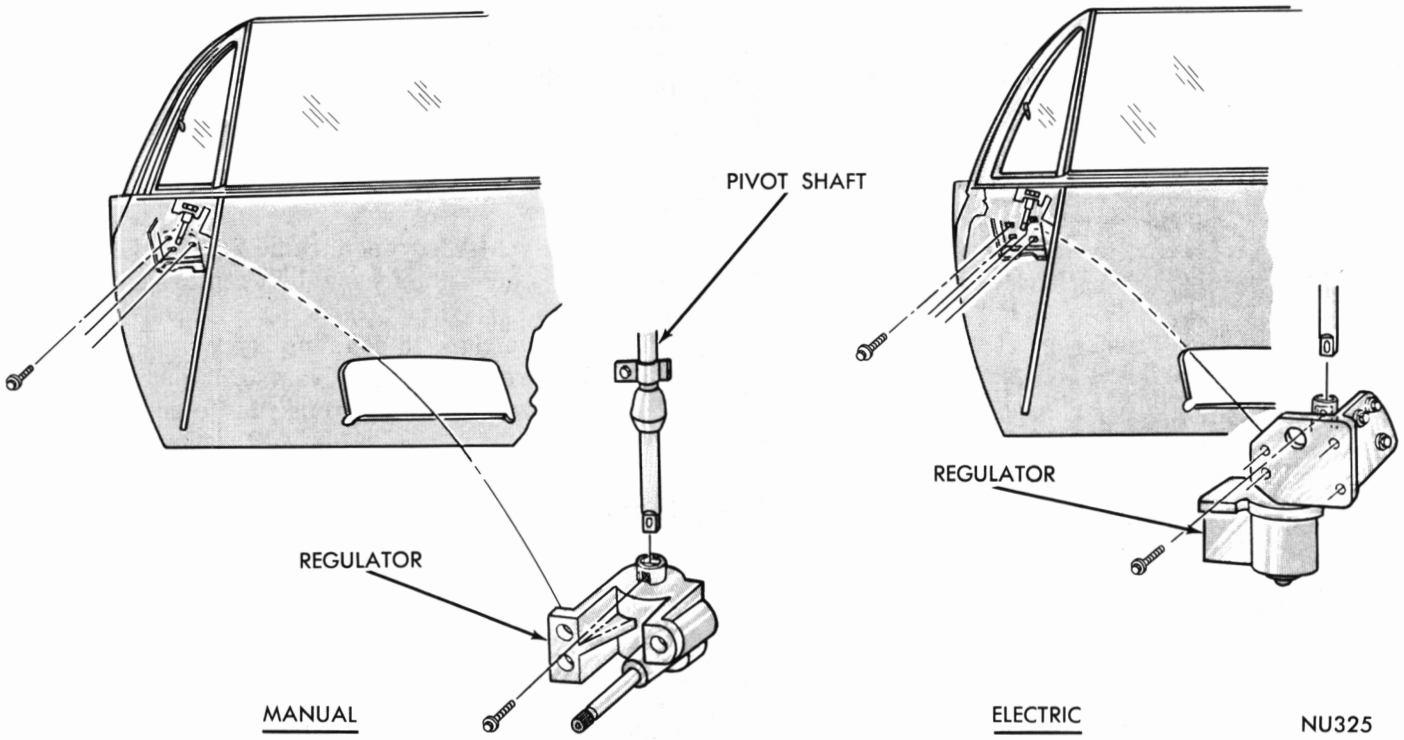

Fig. 41—Vent Wing Regulator

4 DOOR SEDAN and STATION WAGON

Adjustments (Fig. 42)

(1) Run glass approximately 2/3 way down.

(2) Tighten vent wing lower adjusting rod to inner panel screw assembly.

(3) Lower glass until top edge is even with or slightly below top of door at outer panel.

(4) Position stop on regulator plate against stop on sector and snug tighten locknut.

(5) Test operation and inspect alignment of glass. Tighten callouts 6 and 7 securely.

DOOR GLASS AND VENT WING REPLACEMENT

Removal

(1) Remove forward four inches of glass run at upper corner.

(2) Remove division bar adjusting rod nut and washer (Fig. 43).

(3) Remove screw assembly attaching vent wing frame to outside belt reinforcement.

(4) Remove vent wing frame to door frame screws.

(5) Remove lift channel to door glass fastener screws.

(6) Lift vent wing and door glass out of panel.

Installation

(1) Inspect seal on vent wing upper surface.

(2) With regulator arms in the down position, lower vent wing and door glass assembly fully into door.

(3) Move glass assembly rearward into glass run.

(4) Position washer on division channel lower adjusting rod and insert adjusting rod into opening in support bracket.

(5) Position vent wing frame to door upper frame, aligning notch in lower pivot to hole in spacer bracket.

(6) Install retaining screw at spacer bracket.

(7) Starting at bottom attaching hole, secure vent wing frame to door frame with screws.

(8) Install lower adjusting rod nut and washer.

(9) Install lift channel to door glass fastener screw.

(10) Position loosen 4 inches of upper run channel and fully seat in channel.

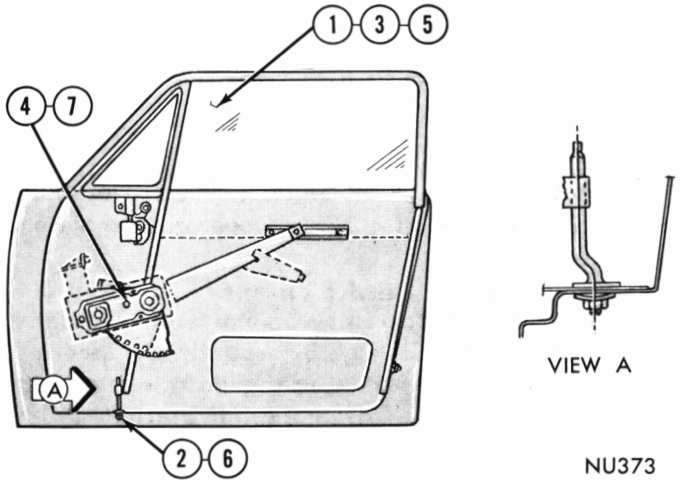

Fig. 42—4 Door Sedan and Station Wagon Glass Adjustments

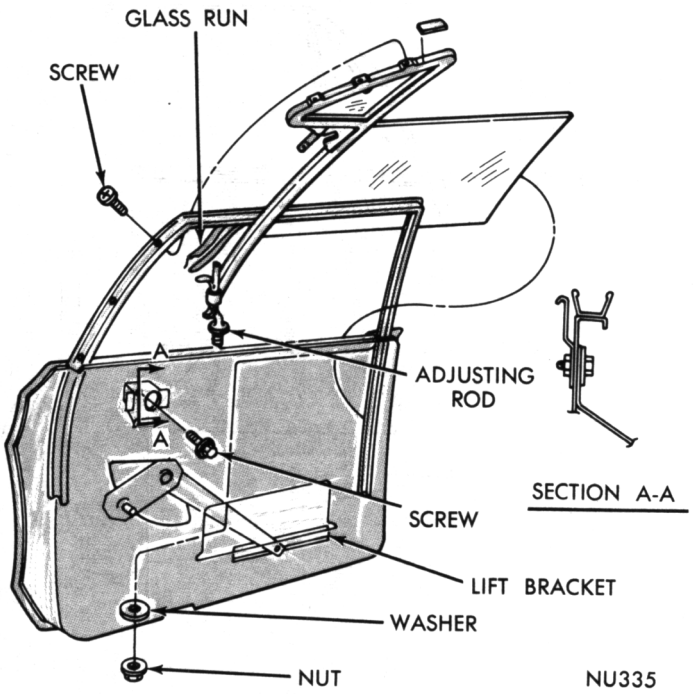

Fig. 43—Glass Replacement

GLASS RUN

The glass run (Fig. 44) is a press fit in the door frame. Position run to door frame by inserting lower leg between inner and outer door panels. Index molded corner to upper rear corner of frame and press firmly into place. Press run into upper door frame leaving forward four inches out of retainer to facilitate vent wing installation.

Glass Lift Bracket

The glass lift bracket (Fig. 40) is positioned over sliding blocks on the regulator arms. Screws are used to secure the lift channel to the glass fasteners. Lubricate the sliding block contact areas of the lift channel sparingly.

DOOR GLASS REGULATOR

The manual and electric operated regulators (Fig. 39) are attached to the door inner panel with screws.

Refer to the Electrical Group for test procedures and wiring diagrams for electric operated regulators.

Regulator Motor Replacement

When necessary to remove motor from regulator, it is imperative the linkage be securely clamped in a vise to lock it in place. Failure to do this allows the assist spring to drive the mounting bracket around the lift pivot.

Window Lift Switch

Slide a thin blade behind the switch housing (front and back) to depress retaining clips and pull switch out from panel. Carefully separate multiple terminal block from switch body and remove switch from panel.

VENT WING REGULATOR

Removal

(1) With vent wing open, remove screws attaching regulator to door inner panel belt reinforcement (Fig. 41).

(2) Remove shaft to coupling screw.

(3) Move regulator off of vent wing pivot shaft.

(4) Remove regulator through large access hole in door panel.

Installation

(1) Through large access hole, position and align sleeve on regulator coupling over vent wing pivot shaft.

(2) Position and align regulator body to attaching slots in door inner panel belt reinforcement and install attaching screws.

(3) Install regulator coupling to vent wing pivot shaft screw.

REAR DOORS

Adjustments—Sedan (Fig. 45)

(1) Raise window to approximately 1/8 inch below door frame.

(2) Adjust regulator pivot bracket so gap between top of glass and door frame is constant. Snug tighten attaching nuts.

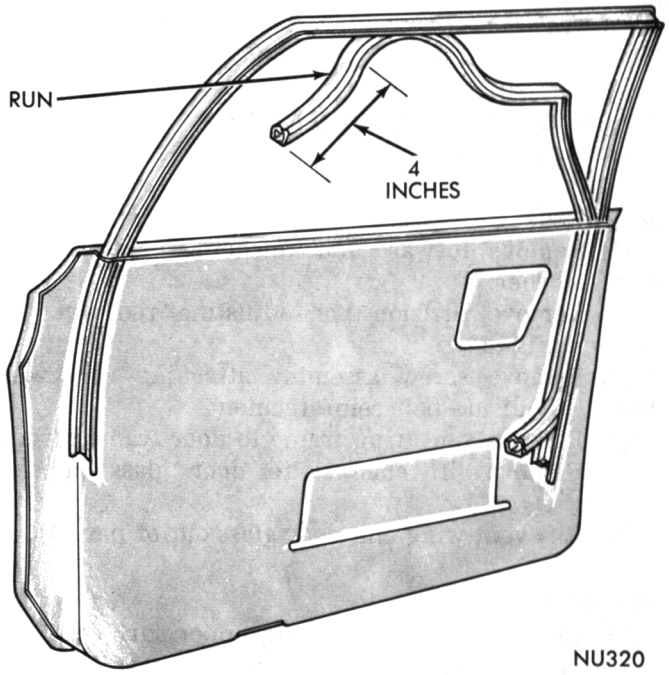

Fig. 44—Glass Run

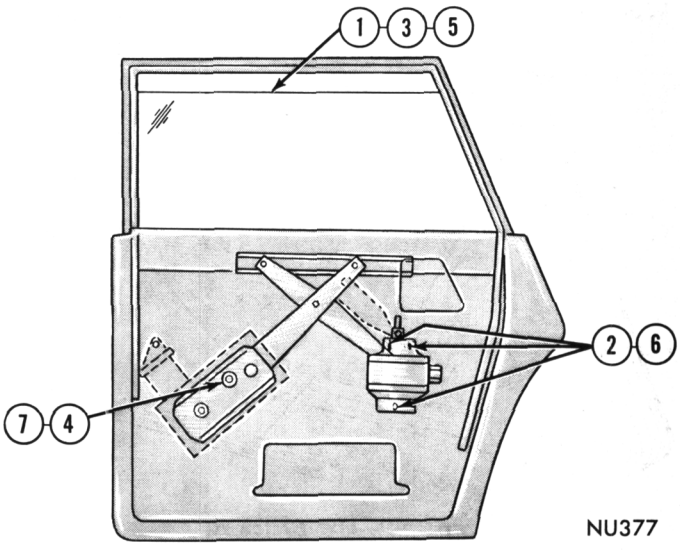

Fig. 45—Sedan Rear Door Glass Adjustments

(3) Lower glass until top edge is even with or slightly below outer panel belt weatherstrip.

(4) Position stop on regulator plate against sector stop and snug tighten nut.

(5) Test operation and inspect alignment of glass. Tighten callouts 6 and 7 securely.

GLASS REPLACEMENT

Removal

(1) Remove lift channel to door glass fastener screws.

(2) Rotate front edge of glass rearward and up to disengage ends of glass from run channels.

(3) Lift glass assembly out of door.

(4) Remove lift fasteners from glass (Fig. 46).

Installation

(1) Position lift fasteners into glass from glass inner surface (Fig. 46).

(2) With bottom of glass in forward position, lower glass into door.

(3) Rotate front edge of glass forward and down, engaging glass ends into the front and rear glass runs.

(4) Align glass fasteners with holes in lift channel and secure with screws.

Glass Run

The rear door glass run (Fig. 47) is a press fit in the door frame. Index the front notch into upper front corner of door frame and press entire front leg of run secure. Position rear notch in run to upper rear corner of door frame and press entire top and rear leg securely in channel.

Pivot Bracket

Removal

(1) Remove the rear door glass.

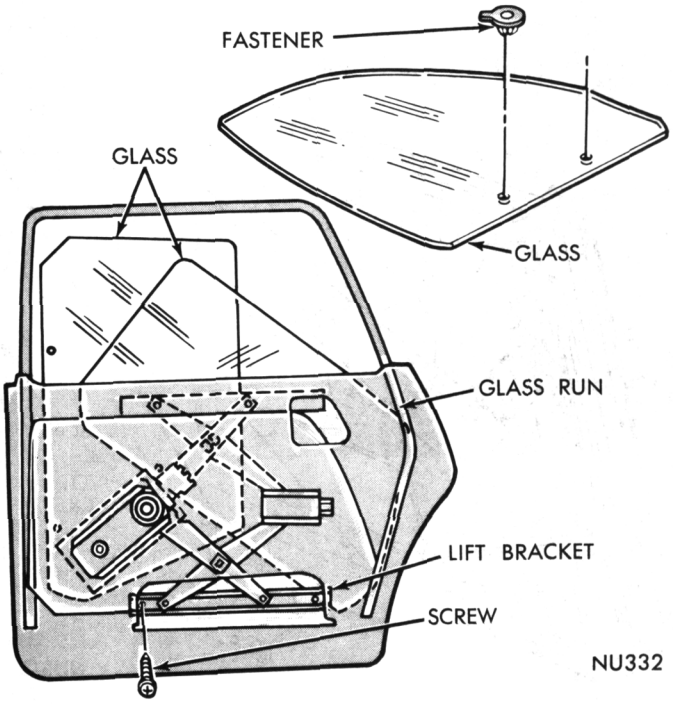

Fig. 46—Glass Replacement

(2) Remove pivot support bracket to door inner panel screw assemblies (Fig. 48).

(3) Slide pivot channel off of regulator arm slide and remove pivot bracket through large access hole.

Installation

(1) Apply lubricant to sliding contact surfaces of pivot channel.

(2) Through large access hole, position pivot channel over slide on regulator idler arm.

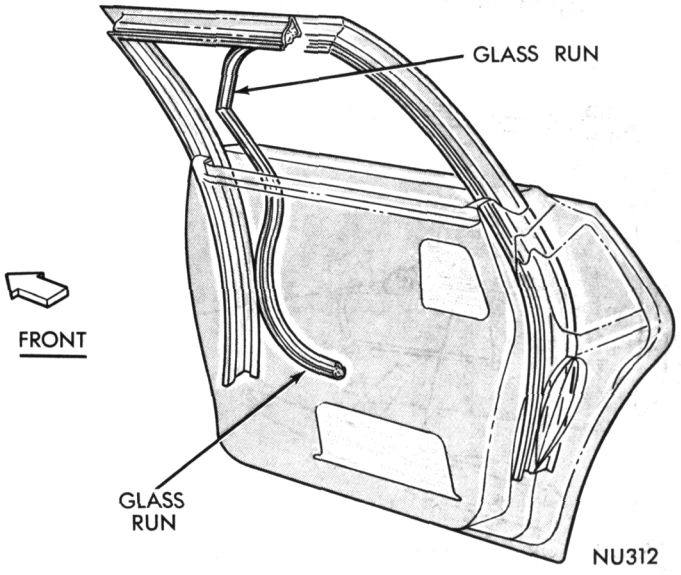

Fig. 47—Glass Run

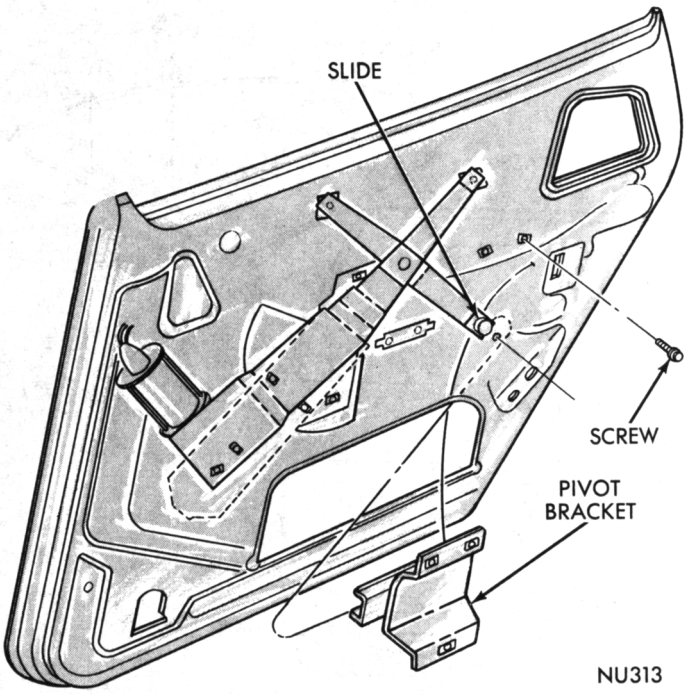

Fig. 48—Pivot Bracket

(3) Align pivot bracket mounting holes with holes in door inner panel and secure with screws.
(4) Install rear door glass.

Glass Lift Bracket (Fig. 49)

Removal

(1) Remove rear door glass to lift bracket screws.
(2) Move lift bracket forward on front slide to disengage bracket from rear slide.
(3) Move bracket rearward to remove from front slide.

Installation

(1) Apply lubricant to channel of lift bracket.

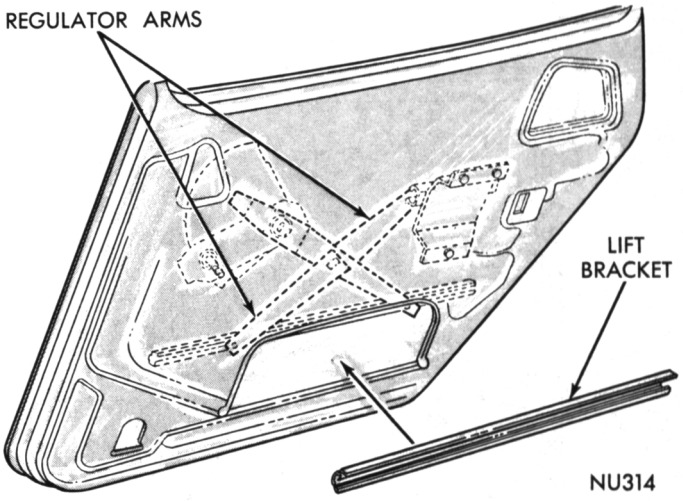

Fig. 49—Lift Bracket

(2) Position bracket channel to regulator arm front slide first, then move rearward to engage rear slide.
(3) Install rear door glass to lift bracket screws.

Regulators

The manual and electric operated regulators (Fig. 50) are attached to the door inner panel with screws.

Refer to the Electrical Group for test procedures and wiring diagrams for electric operated regulators.

Regulator Motor Replacement

When necessary to remove motor from regulator, it is imperative the linkage be securely clamped in a vise to lock it in place. Failure to do this allows the assist spring to drive the mounting bracket around the pivot.

Window Lift Switch

Slide a thin blade behind the switch housing (front and back) to depress retaining clips and pull switch out from panel. Carefully separate multiple terminal block from switch body and remove switch from panel.

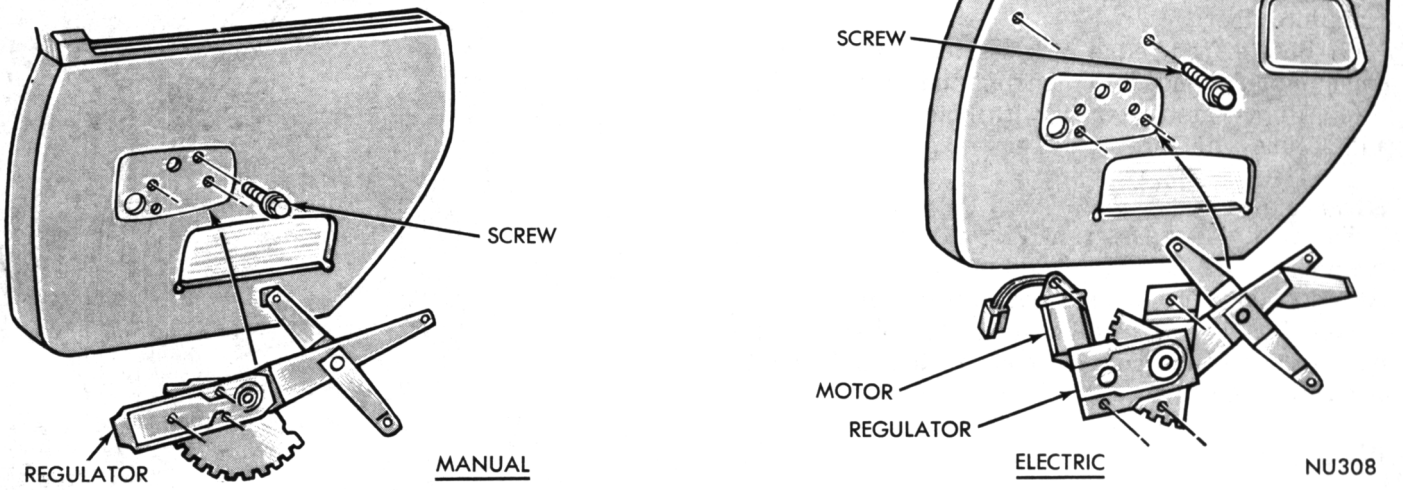

Fig. 50—Regulator Assemblies

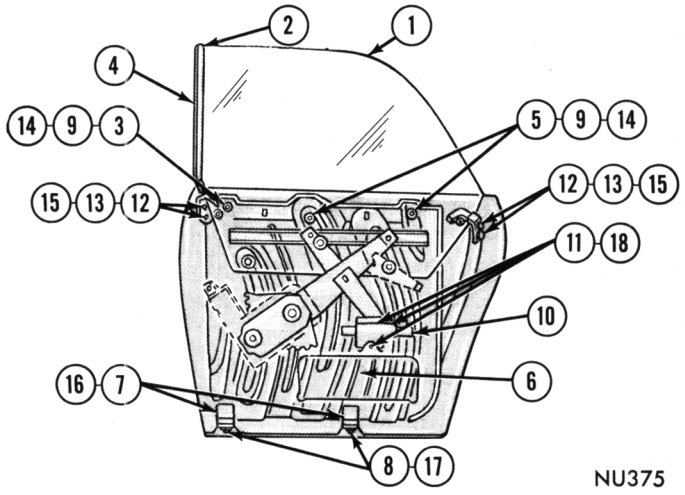

Fig. 51—Hardtop Rear Door Glass Adjustments

HARDTOP MODELS

Adjustments (Fig. 51)

Parallelism and Primary Seal

(1) Raise window completely.

(2) Line up rear door glass upper front frame with upper rear edge of front door glass rear frame.

(3) Snug tighten track panel to reinforcement front screw.

(4) Set rear glass front frame parallel to rear frame of front door glass by lifting track panel bottom edge.

(5) Snug tighten rear and center floating screws in cage nuts.

In-Out and Secondary Seal

(6) Force bottom of track panel in or out for secondary seal with roof weatherstrip.

(7) Snug tighten adjusting bracket to track panel screws.

(8) Snug tighten adjusting bracket to track panel nut assembly on bottom of door panel outside surface.

(9) Tighten track panel upper attaching screws.

Parallelism to Front Glass Frame and Roof Rail Weatherstrips

(10) Adjust pivot bracket to bring upper front corner of rear glass parallel between front and rear glass frames and between glass and roof rail weatherstrips.

(11) Snug tighten the pivot bracket screw assemblies.

Up-Stops

(12) Adjust up-stops by forcing them down against plastic up-stop bumpers on glass.

(13) Snug tighten screws on hinge and lock faces. Tighten callouts 14 through 18 securely.

GLASS REPLACEMENT

The rear door incorporates a track panel assembly to which the door glass is attached. When necessary to remove or install either the glass or track panel, the panel and glass must be removed or installed as an assembly.

Removal

(1) Remove track panel to door panel upper screws (Fig. 52).

(2) Remove down-stop adjusting bracket to track panel screws.

(3) Remove up-stop adjusting brackets from door panel (Fig. 53).

(4) Remove glass lift bracket to glass fastener screws (Fig. 54).

(5) Move track panel rearward, approximately four

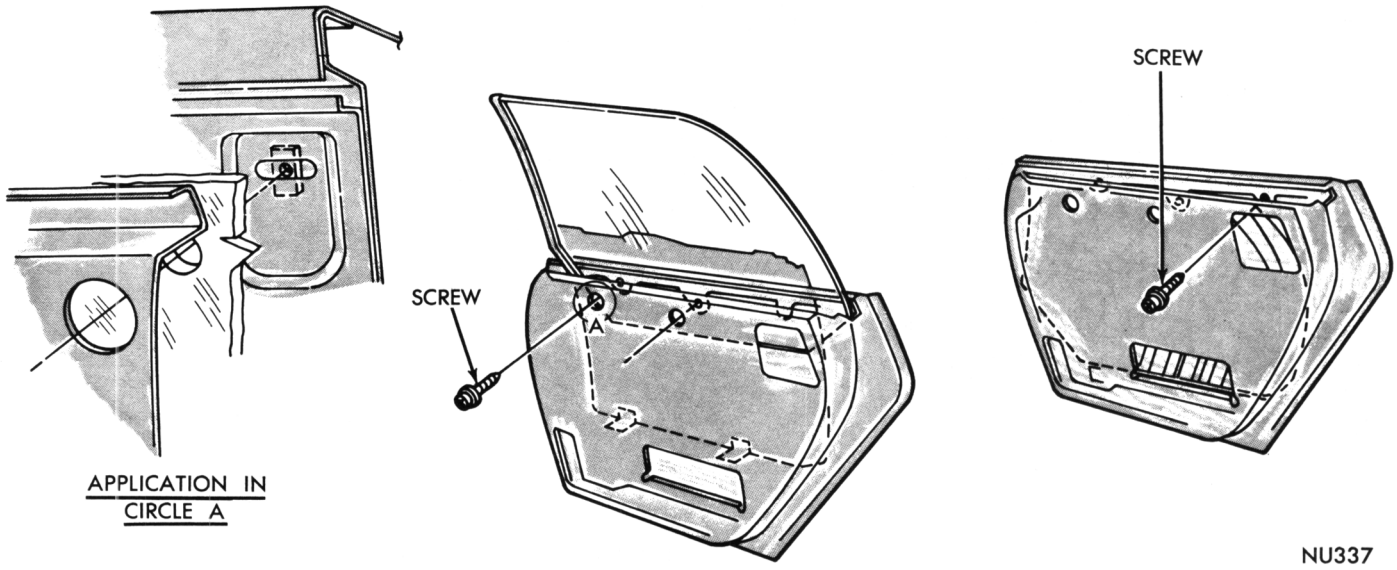

Fig. 52—Track Panel Upper Attachment

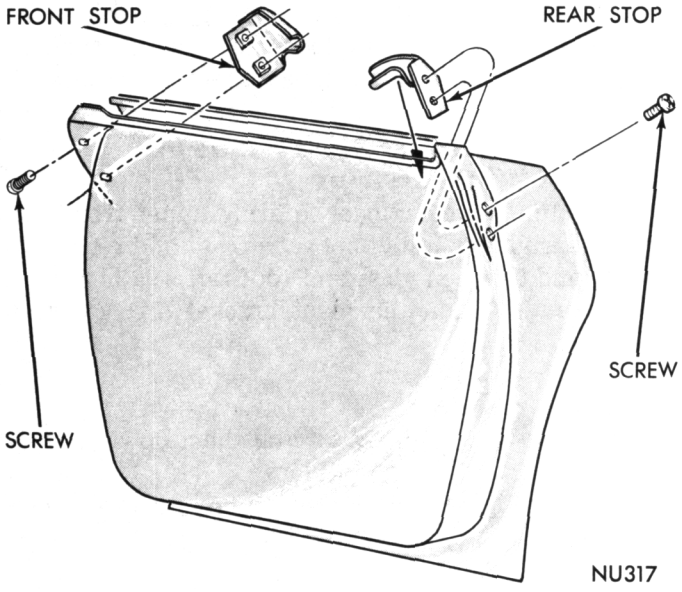

Fig. 53—Up-Stop Brackets

inches, and raise door glass to the full-up position.

(6) Raise track panel slowly until up-stop on glass (Fig. 55) are cleared through door.

(7) Raise track panel completely and remove glass and panel assembly (Fig. 56).

(8) Place track panel and glass assembly on a protected surface with the glass facing downward.

(9) Remove track stabilizer guide screws (Fig. 57) and remove guides from track panel.

(10) Remove U-nuts from outer side of track panel and bumpers from top inner side (Fig. 58).

Installation

(1) Insert U-nuts into outer side of track and bumpers into top inner side.

(2) With glass assembly inner surface positioned downward on a protected surface, place track panel on glass aligning fasteners in glass with channels in panel.

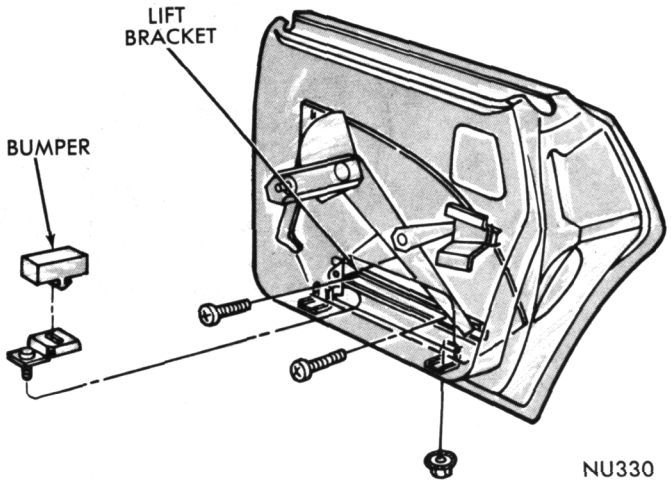

Fig. 54—Lift Bracket

(3) Position stabilizer guides in track panel, align with fasteners in glass and install screws.

(4) Insert glass and track panel into door, sliding assembly rearward approximately four inches, to allow clearance for the U-nuts.

(5) Slide track panel off of glass, until up-stops on glass find clearance to enter door opening.

(6) Slowly lower track panel completely to bottom of door, moving it forward approximately four inches, at the same time and positioning behind the down-stop brackets.

(7) Slowly lower the glass assembly until it is positioned on down-stop bumpers.

(8) Raise glass sufficiently to allow installing the down-stop to track panel screws.

(9) Install track panel to door panel screws, screws at panel top edge.

(10) Align holes in glass lift bracket with fasteners in glass and install screws.

(11) Install up-stop brackets on door inner panel.

UP-STOPS

The rear up-stop (Fig. 53) is attached to slotted areas in the door shut face between the inner and outer panels. The front up-stop (Fig. 53) is attached to slotted areas of the inside panel through the glass opening between inner and quarter panel at upper front corner.

GLASS ASSEMBLY

The door glass to lift channel fasteners are a press fit in glass (Fig. 55) as are the glass to track and guide

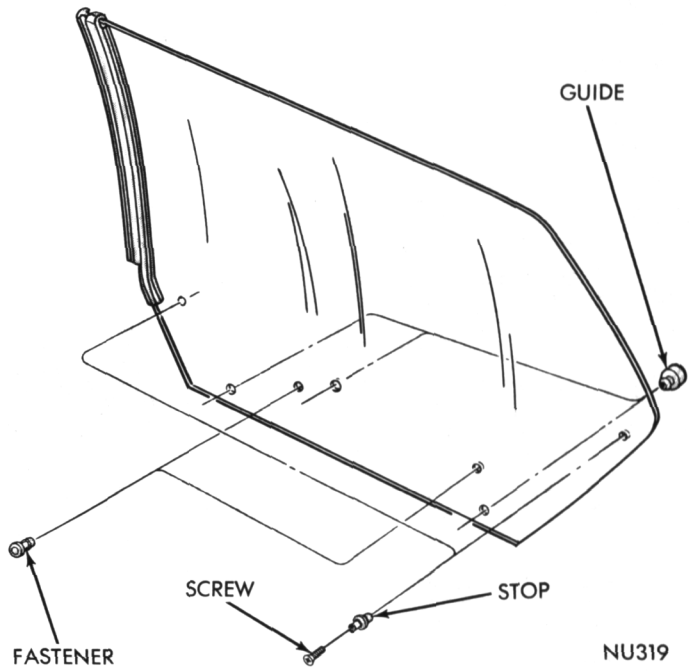

Fig. 55—Door Glass Assembly

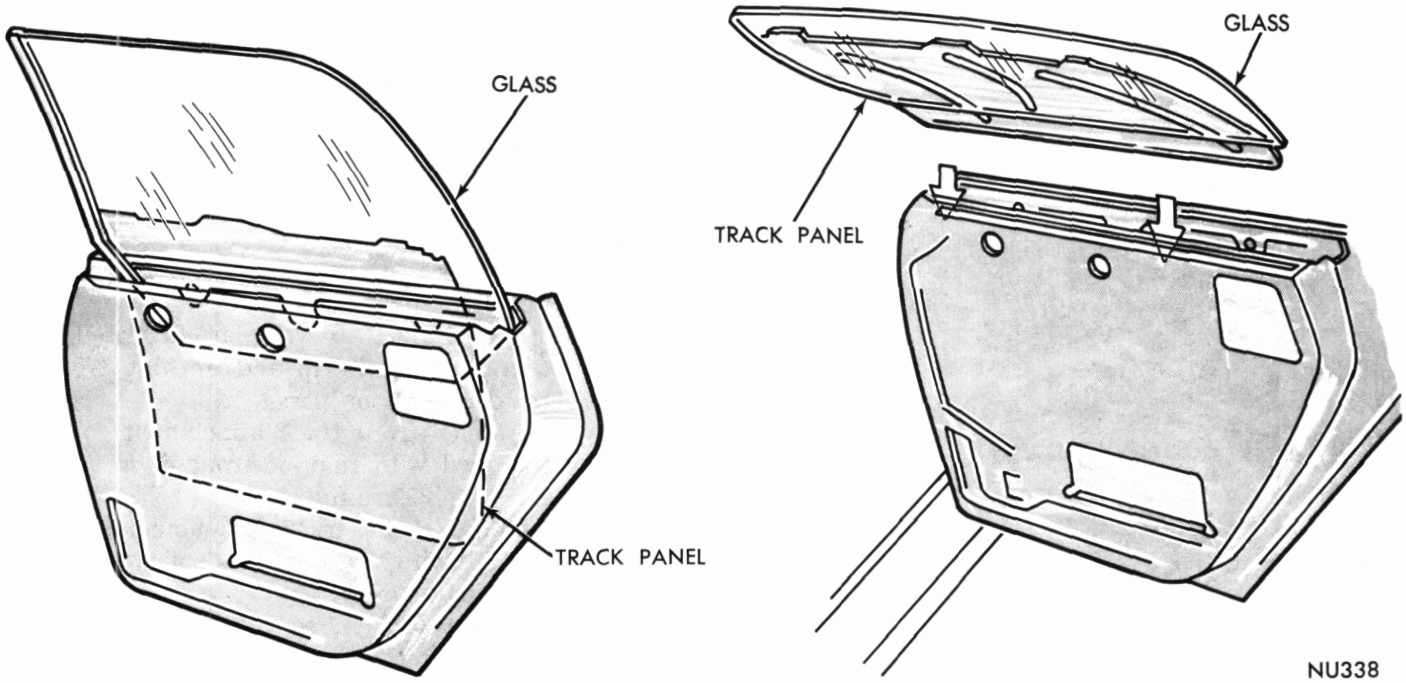

Fig. 56—Glass and Track Panel Replacement

fasteners. The glass up-stops are retained in the glass with screws.

Glass Lift Bracket

The glass lift bracket (Fig. 54) is positioned over sliding blocks on the regulator arms. Screws are used to secure the lift channel to the glass fasteners. Lubricate the sliding block contact areas of the lift channel sparingly.

Regulators

The manual and electric operated regulators (Fig. 50) are attached to the door inner panel with screws.

Refer to the Electrical Group for test procedures and wiring diagrams for electric operated regulators.

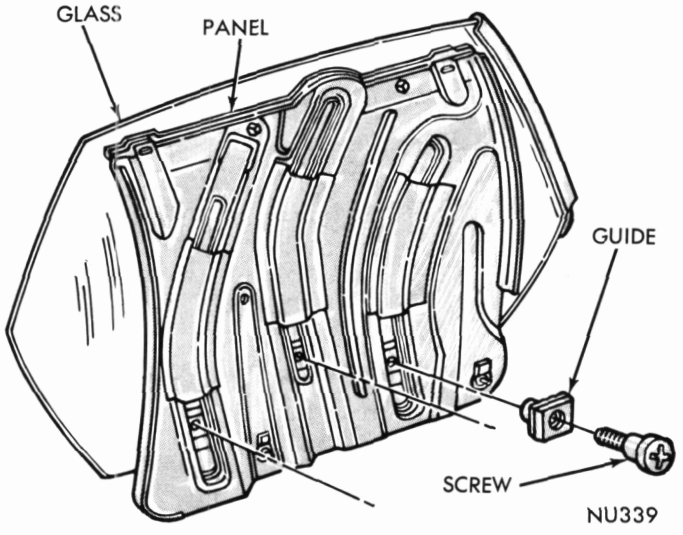

Fig. 57—Track Panel Stabilizer Guides

Regulator Motor Replacement

When necessary to remove motor from regulator, it is imperative the linkage be securely clamped in a vise to lock it in place. Failure to do this allows the assist spring to drive the mounting bracket around the lift pivot.

Window Lift Switch

Slide a thin blade behind the switch housing (front and back) to depress retaining clips and pull switch out from panel. Carefully separate multiple terminal block from switch body and remove switch from panel.

QUARTER PANELS

GARNISH MOULDINGS

The garnish mouldings should be aligned and held in position to assure satisfactory alignment. Do not over-tighten screws, or moulding will become damaged at screw hole area.

TRIM PANELS

To remove quarter window trim panel it is first necessary to remove the rear seat cushion and back. Quarter window trim panels are retained with screws and clips. When installing trim panel, make certain watershield (Fig. 59) is properly cemented and positioned.

HANDLES

The regulator handle is attached with an allen screw.

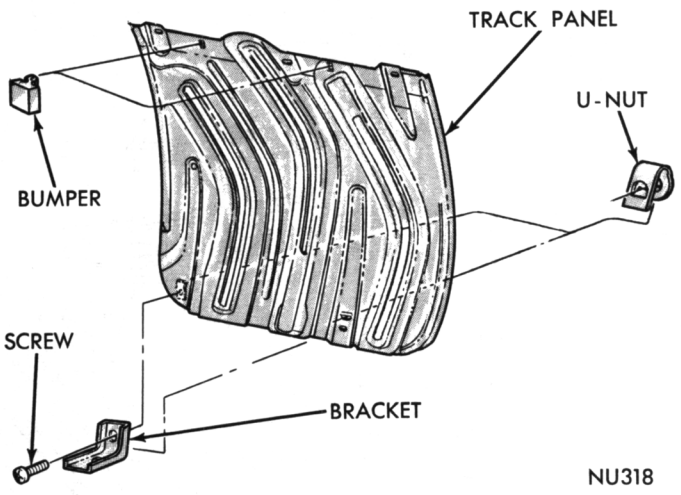

Fig. 58—Track Panel Assembly

WATERSHIELDS

Refer to Figure 59 for sealing and application areas of the watershield.

BELT LINE WEATHERSTRIP

The belt line weatherstrip is retained on the outer panel with spring type retainers.

GLASS ADJUSTMENTS

The circled numbers shown on the glass adjustment reference illustrations indicate the particular step number being read in the adjustment procedure.

Prior to adjusting glass, all doors must be correctly fitted in their opening and the weatherstrips at the "A" post and roof rails must be properly installed.

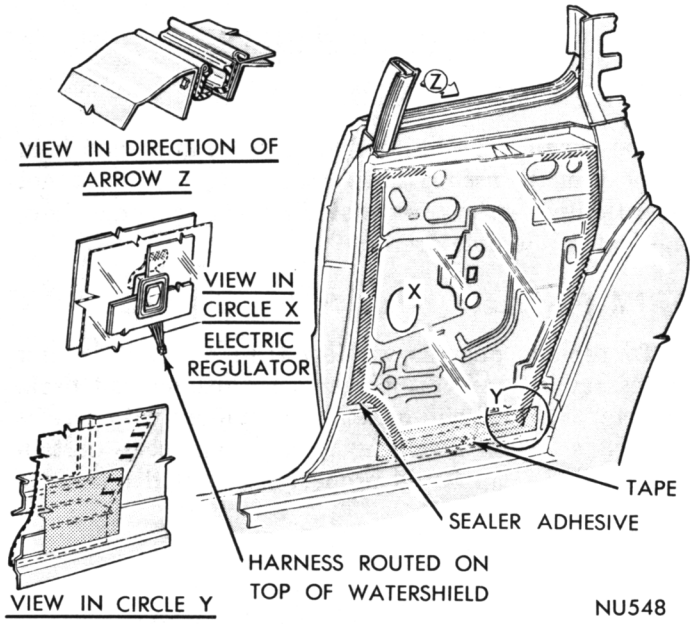

Fig. 59—Quarter Panel Watershields

Refer to the adjustment illustration and loosen the attaching screws and nuts of the various components affecting glass adjustment.

QUARTER WINDOW (HARDTOP-CONVERTIBLE)

Adjustments (Fig. 60)

(1) Adjust upper rear track so rear of glass lightly touches outer panel belt weatherstrip.

(2) Raise glass fully so top of glass is seated fully against roof rail weatherstrip and flushing front of glass with top of front door glass.

(3) Adjust upper front track attachment so front of glass is aligned with rear of front door glass at belt line and snug secure nut.

(4) Adjust lower front track attachment so front of glass is aligned with rear of front door glass at roof rail and snug secure screw.

(5) Adjust pivot bracket so top of glass is fully against and parallel to adjusting bead on roof rail weatherstrip. Snug secure nuts.

(6) Loosen sleeve nut and move upper rear track attachment forward so weatherstrip and front of glass is against front door glass. Snug secure nut.

(7) Loosen pivot bracket nuts, adjust pivot bracket and snug secure nuts.

(8) Position front and rear up stops down against glass lower frame and snug secure screws.

(9) Lower glass until glass top edge is even with or slightly below belt line of outer panel.

(10) Snug secure lower rear track adjusting screw.

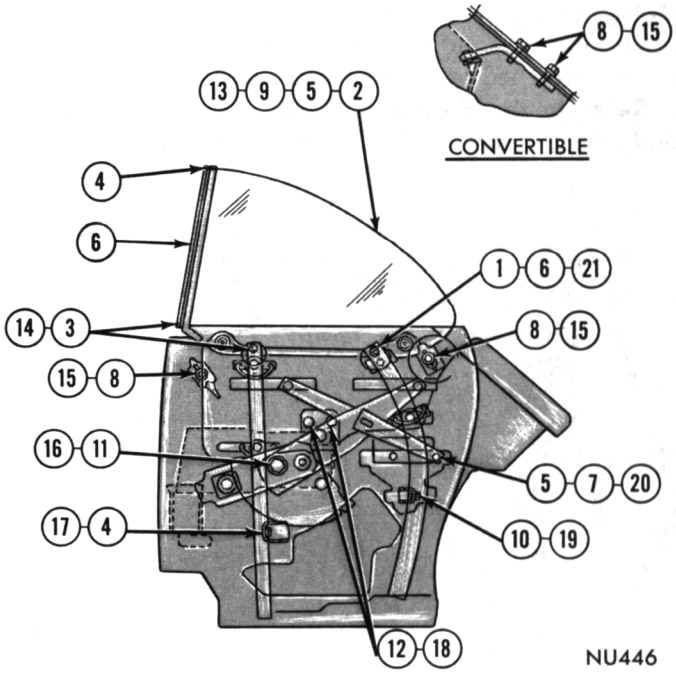

Fig. 60—Quarter Window Adjustments—Hardtop—Convertible

(11) Position stop on regulator plate against stop on sector and snug secure nut.

(12) Position down stops against bumpers and snug secure screws.

(13) Operate window and inspect alignment. Tighten callouts 14 through 21 securely.

GLASS REPLACEMENT

Removal

(1) Align glass lower frame to glass attaching screws with access holes in quarter inner panel (Fig. 61).

(2) Support glass, remove lower frame to glass attaching screws and remove glass assembly from panel.

(3) Remove spacers from openings in glass.

Installation

(1) Position spacers in openings of glass lower frame.

(2) Install grommets on glass retaining screws.

(3) Align glass lower frame attaching holes with access openings in quarter inner panel.

(4) Lower glass into quarter panel, align openings in glass with holes in lower frame and install screw and grommet assemblies.

DOWN STOP

The down stop bracket and bumper (Fig. 62) is attached to the outboard side of the glass lower frame assembly with screws.

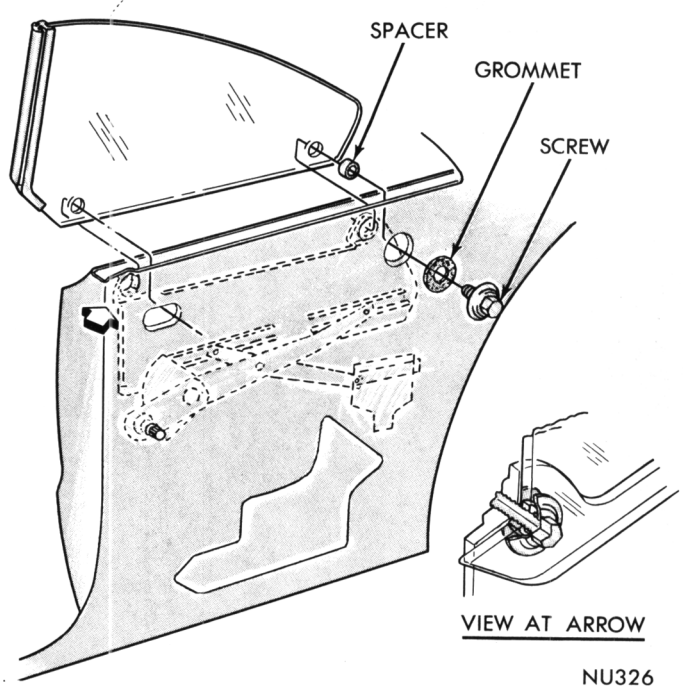

Fig. 61—Glass Replacement

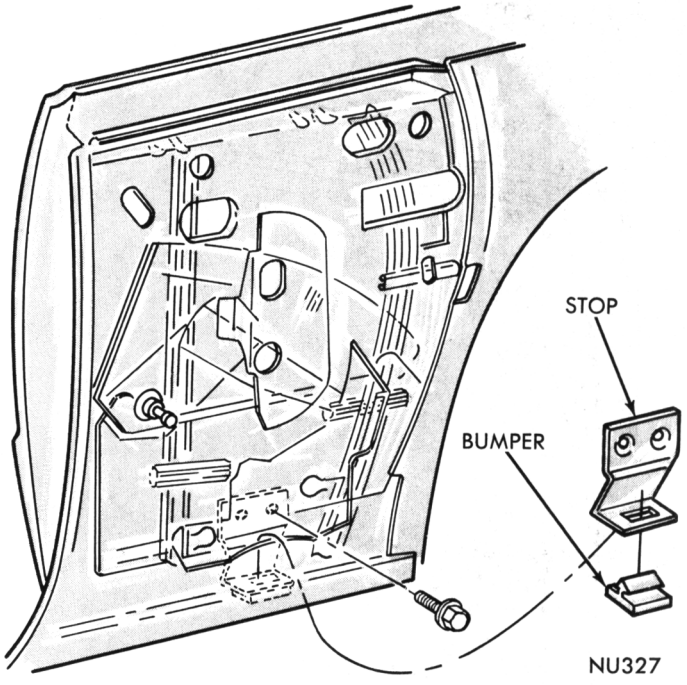

Fig. 62—Down Stops

PIVOT BRACKET

The pivot bracket assembly (Fig. 63) is positioned to the roller slide on the regulator idler arm. The bracket weld screws are inserted through a support welded to the quarter inner panel and retained with nut assemblies.

UP-STOPS

The up-stops (Fig. 64) are attached to slotted areas

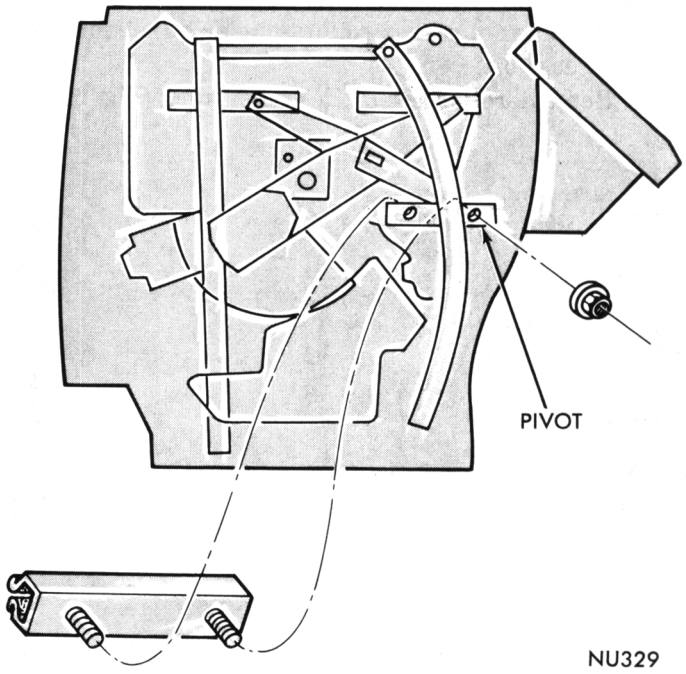

Fig. 63—Pivot Bracket

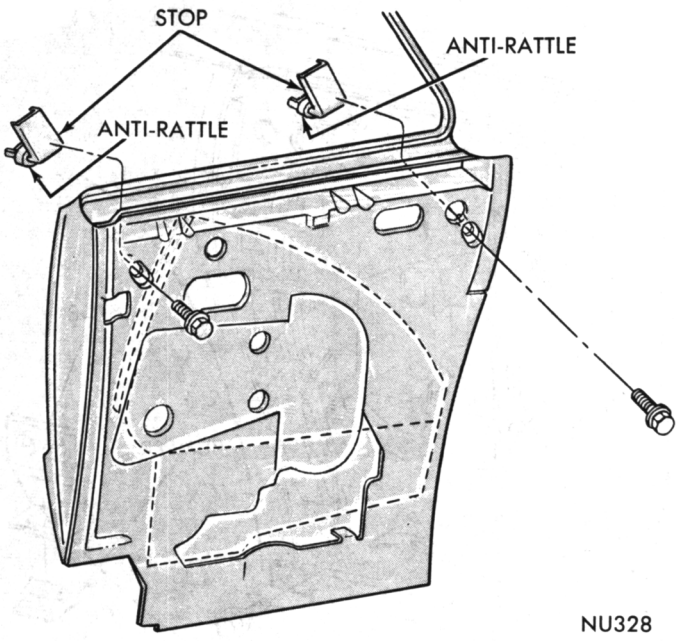

Fig. 64—Up-Stops

on the quarter inner panel with screws. An anti-rattle type grommet is positioned over each up-stop flange.

FRONT TRACK

Removal

(1) Remove nut and washer from sleeve nut at upper end of track (Fig. 65).

(2) Remove track lower plate to support screw.

(3) Push track inward and move track and roller assemblies rearward to disengage rollers from glass lower frame.

(4) Remove track and rollers out of panel through large access hole.

(5) Remove roller assemblies from track (Fig. 66).

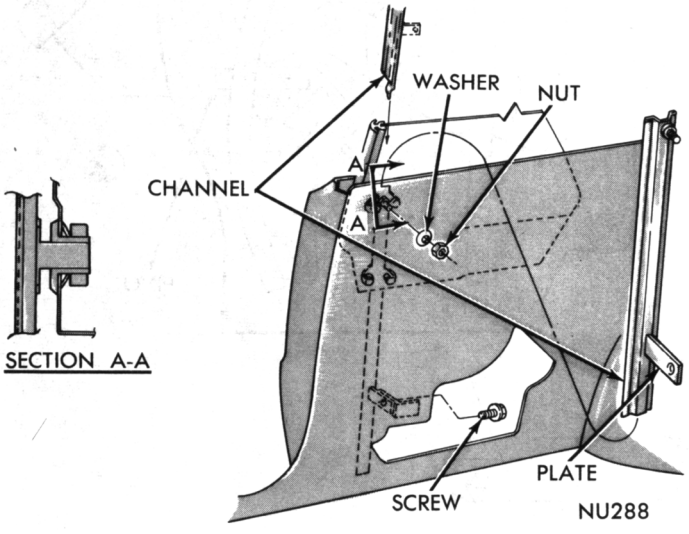

Fig. 65—Front Track Assembly

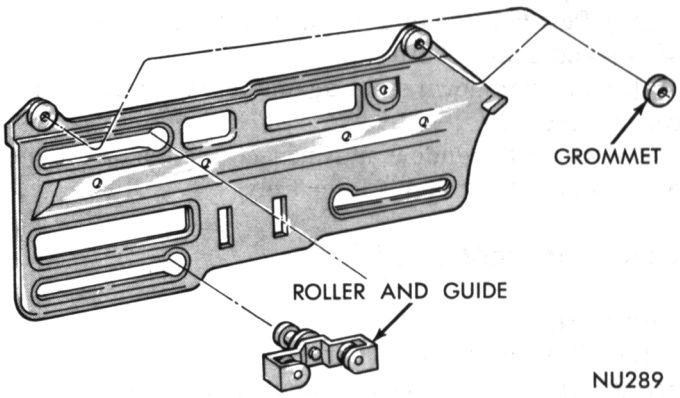

Fig. 66—Glass Lower Frame Assembly

Installation

(1) Position roller and guide assemblies on track.

(2) Insert track assembly in quarter panel.

(3) Position roller assemblies into slots of glass lower frame (Fig. 66).

(4) Insert sleeve nut on upper end of track into hole of inner panel (Fig. 65).

(5) Align track lower plate to support and secure with screw.

(6) Place spring washer, concave side facing outboard, on track upper sleeve nut and install retaining nut.

REAR TRACK

(1) Remove nut and washer from track upper sleeve nut (Fig. 67).

(2) Remove track lower plate to support screw.

(3) Push track inward and move track and roller assembly forward to disengage roller from slot in glass lower frame.

(4) Remove track and roller assembly out of panel through large access opening.

(5) Remove roller assembly from track.

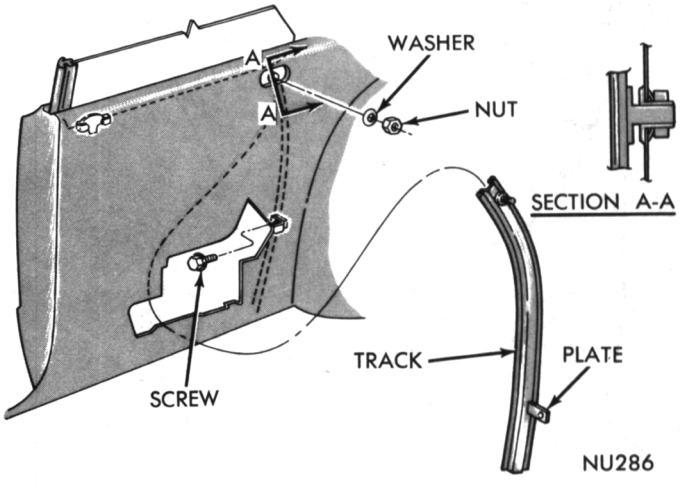

Fig. 67—Rear Track

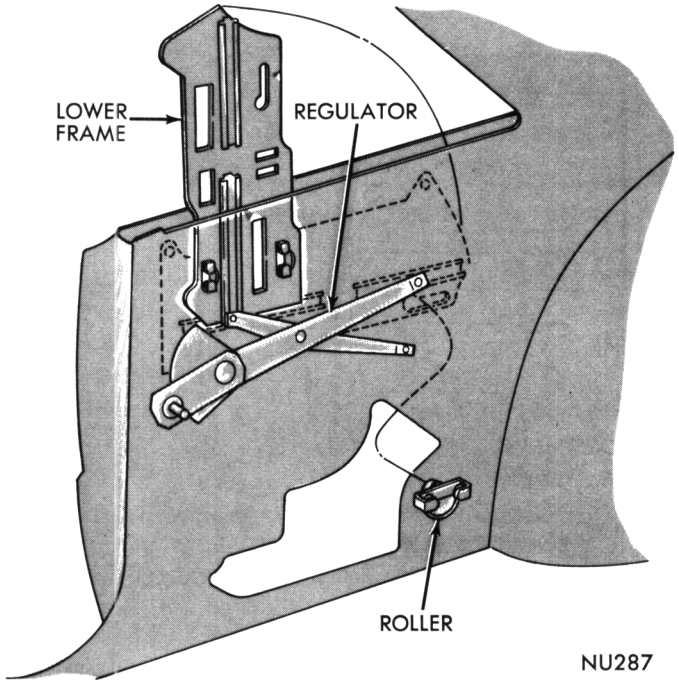

Fig. 68—Glass Lower Frame Replacement

Installation

(1) Position roller assembly on track and insert assembly into quarter panel through large access opening.

(2) Position roller assembly into slot of glass lower frame.

(3) Insert track upper sleeve into hole of inner panel.

(4) Align track lower plate on support and secure with screw.

(5) Place spring washer, concave side facing outboard, on sleeve nut and install retaining nut.

GLASS LOWER FRAME

Removal (Fig. 68)

(1) Remove quarter glass assembly.

(2) Remove rear track upper and lower attachments and move track and roller assembly forward to disengage roller assembly from glass lower frame.

(3) Move lower frame assembly to disengage channel from regulator arm rear slide.

(4) Raise rear of lower frame and remove from quarter

(5) Remove roller and guide assemblies from lower frame.

Installation

(1) Inspect glass lower frame to be sure grommets are installed at the upper outer holes (Fig. 66).

(2) Insert roller and guide assemblies into lower frame front upper and lower slots.

(3) Slide front end of lower frame into panel and engage front of lift channel to slide on regulator front arm (Fig. 68).

(4) Turn frame to normal position and engage rear channel to regulator rear arm slide.

(5) Position roller and guide assembly, on rear track, into rear slot of lower frame.

(6) Install rear track assembly on inner panel.

(7) Install glass assembly.

Regulators

The manual and electric operated regulators (Fig. 69) are attached to the door inner panel with screws.

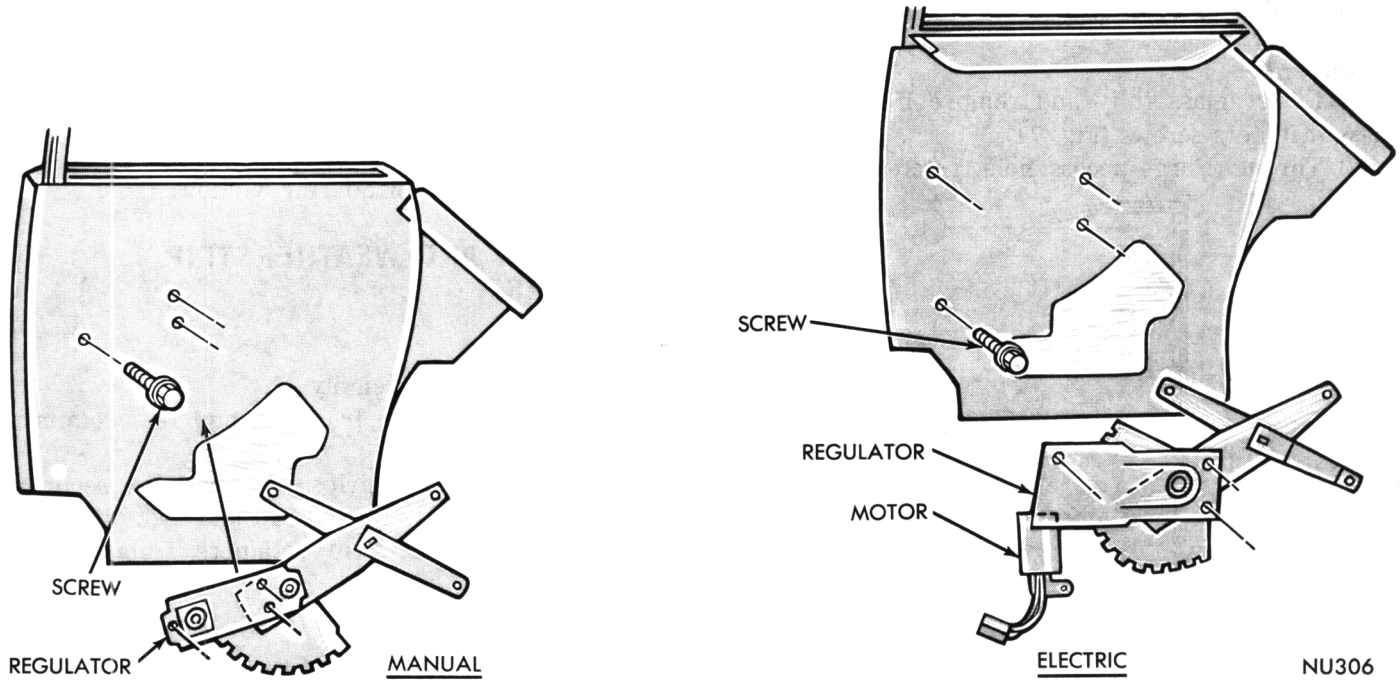

Fig. 69—Regulator Assemblies

Refer to the Electrical Group for test procedures and wiring diagrams for electric operated regulators.

Regulator Motor Replacement

When necessary to remove motor from regulator, it is imperative the linkage be securely clamped in a vise to lock it in place. Failure to do this allows the assist spring to drive the mounting bracket around the lift pivot.

Window Lift Switch

Slide a thin blade behind the switch housing (front and back) to depress retaining clips and pull switch out from panel. Carefully separate multiple terminal block from switch body and remove switch from panel.

GLASS ADJUSTMENTS (SEDAN MODELS)

(1) Raise glass to approximately 1/8 inch below window opening frame.

(2) Adjust regulator pivot bracket (Fig. 70) so gap between top of glass and window opening frame is constant. Tighten pivot bracket nuts.

(3) Run glass approximately 2/3 way down.

(4) Allow glass to set rear run retainer for in-out position and snug tighten lower bracket screw.

(5) Lower window until top of glass is even with or slightly below outer panel belt line weatherstrip.

(6) Position stop on regulator plate against stop on sector and snug tighten locknut.

(7) Test operation and inspect alignment of glass. Tighten Callouts 8, 9 and 10 securely.

GLASS REPLACEMENT

Removal

(1) Lower glass fully and remove lift channel to glass fasteners screws (Fig. 71).

(2) Through large access hole, rotate glass clockwise to remove from front and rear run channels.

(3) Raise glass assembly out of panel.

(4) Remove fasteners from glass assembly (Fig. 71).

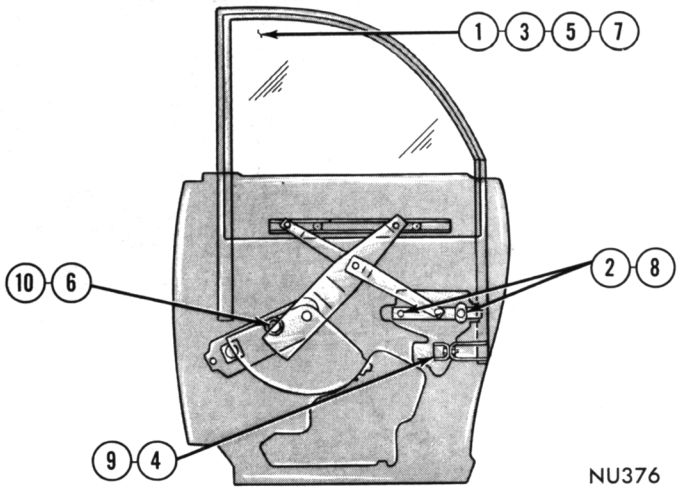

Fig. 70—Quarter Window Adjustments—Sedan

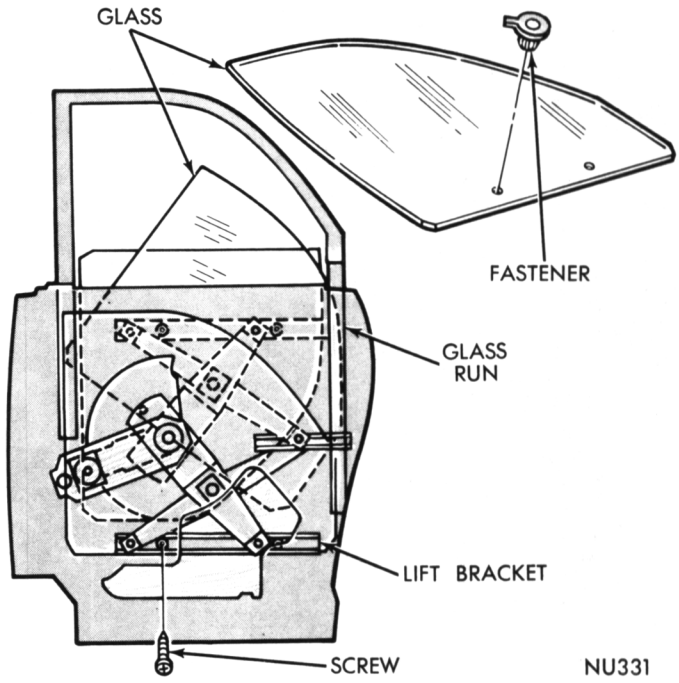

Fig. 71—Quarter Window Replacement

Installation

(1) Insert glass lift fasteners into glass from inner glass surface side.

(2) With rear edge of glass facing down, lower glass assembly into quarter panel.

(3) Through large access opening, rotate glass counterclockwise to engage glass front and rear edges in glass runs.

(4) Lower glass and align lift fasteners to holes in lift channel.

(5) Secure glass to lift channel with screws.

(6) Test operation of quarter window.

GLASS RUN AND WEATHERSTRIP RETAINERS

Removal

(1) Remove glass assembly.

(2) Remove run from front top and rear retainers (Fig. 72).

(3) Remove weatherstrips and screws securing weatherstrip retainers to roof rail and lock pillar.

(4) Remove weatherstrip retainers from quarter panel.

Installation

(1) The weatherstrip retainer seal is a self adhesive type.

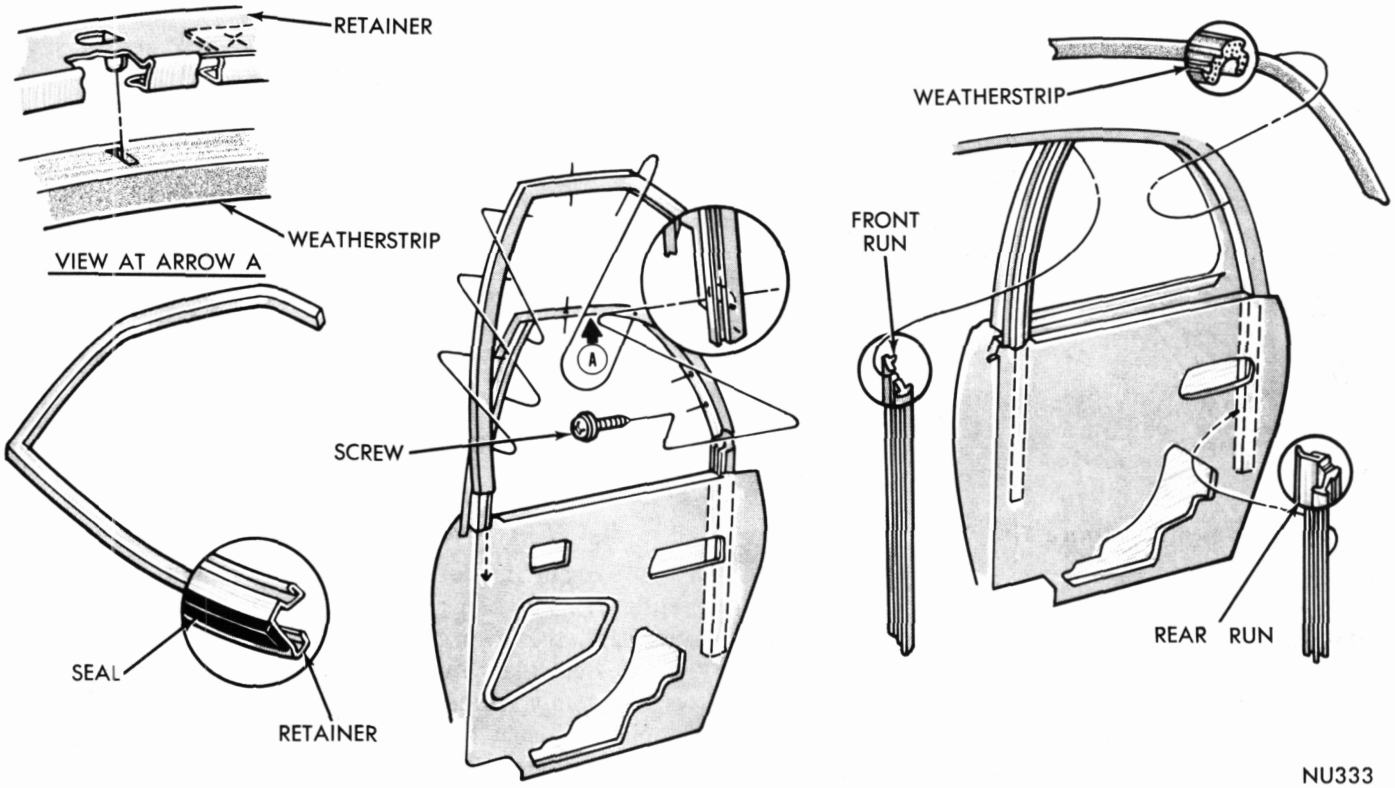

Fig. 72—Weatherstrip Retainer and Runs

(2) Insert retainer front leg in panel opening and align attaching holes with holes in body panel (Fig. 72).

(3) Secure retainer to roof rail with screw, beginning with hole at radius.

(4) Secure retainer to lock pillar with screw.

(5) Position upper weatherstrip to retainer and index to front corner and tab of retainer.

(6) Press weatherstrip into retainer and bend tab over.

(7) Position glass front run to retainer, loading bottom leg between panels at belt line.

(8) Index upper front corner, making a water tight joint and to tab at bottom of retainer.

(9) Press into retainer full length to secure.

(10) Through large access hole, position rear run to retainer, indexing to lower end of roof rail weatherstrip to create a seal.

(11) Press securely into retainer for full length.

(12) Install quarter window assembly.

GLASS LIFT CHANNEL

The lift channel (Fig. 73) is position over slides on the regulator arms and to the glass assembly with screws.

STATION WAGON GLASS REPLACEMENT

Removal

(1) Remove spare tire cover assembly (Fig. 74).

(2) Remove garnish mouldings at quarter window (Fig. 75).

(3) Unlock weatherstrip by inserting a fiber stick into locking groove of weatherstrip and forcing locking tab out of groove.

(4) Remove glass from weatherstrip from inside of vehicle and weatherstrip from fence.

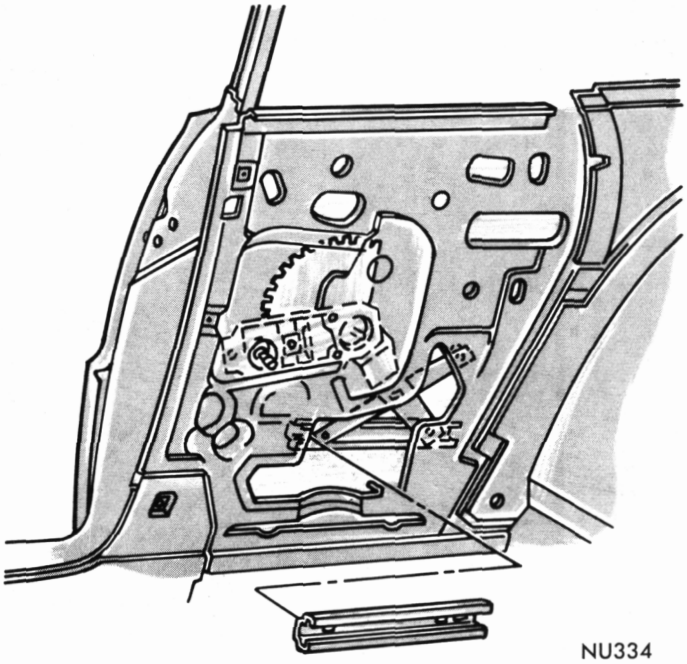

Fig. 73—Glass Lift Bracket

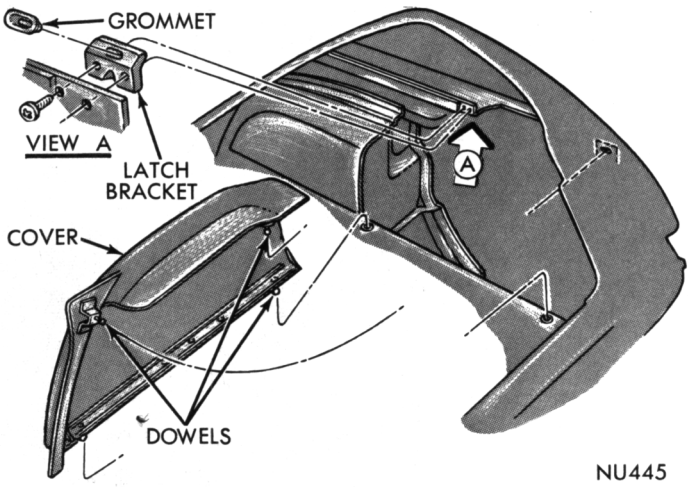

Fig. 74—Spare Tire Cover

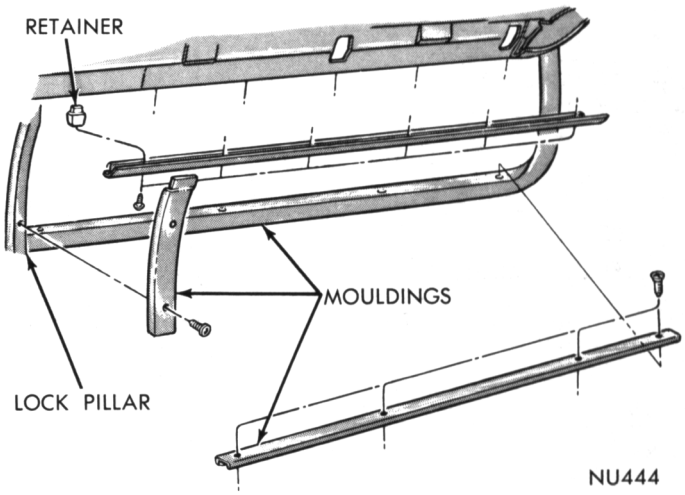

Fig. 75—Quarter Window Garnish Mouldings

Installation

(1) Inspect sealing areas of quarter window to ascertain sealer is applied at areas indicated in Figure 76.

(2) Apply a bead of sealer, starting at front and top sections of weatherstrip (Fig. 77).

(3) Apply a small bead of cement to each lip of glass groove, completely around weatherstrip.

(4) Position weatherstrip on fence with locking edges facing inboard.

(5) From inside of vehicle, insert bottom of glass into weatherstrip and using a fiber stick, pull lip of weatherstrip over glass (Fig. 78).

(6) Seat glass in weatherstrip using hand pressure.

(7) Apply rubber lubricant to weatherstrip locking tab and insert locking tab into weatherstrip groove using a fiber stick.

(8) Apply and press secure, sealer to joint of weatherstrip, body lock upper pillar and roof side rail outer front area (Fig. 79).

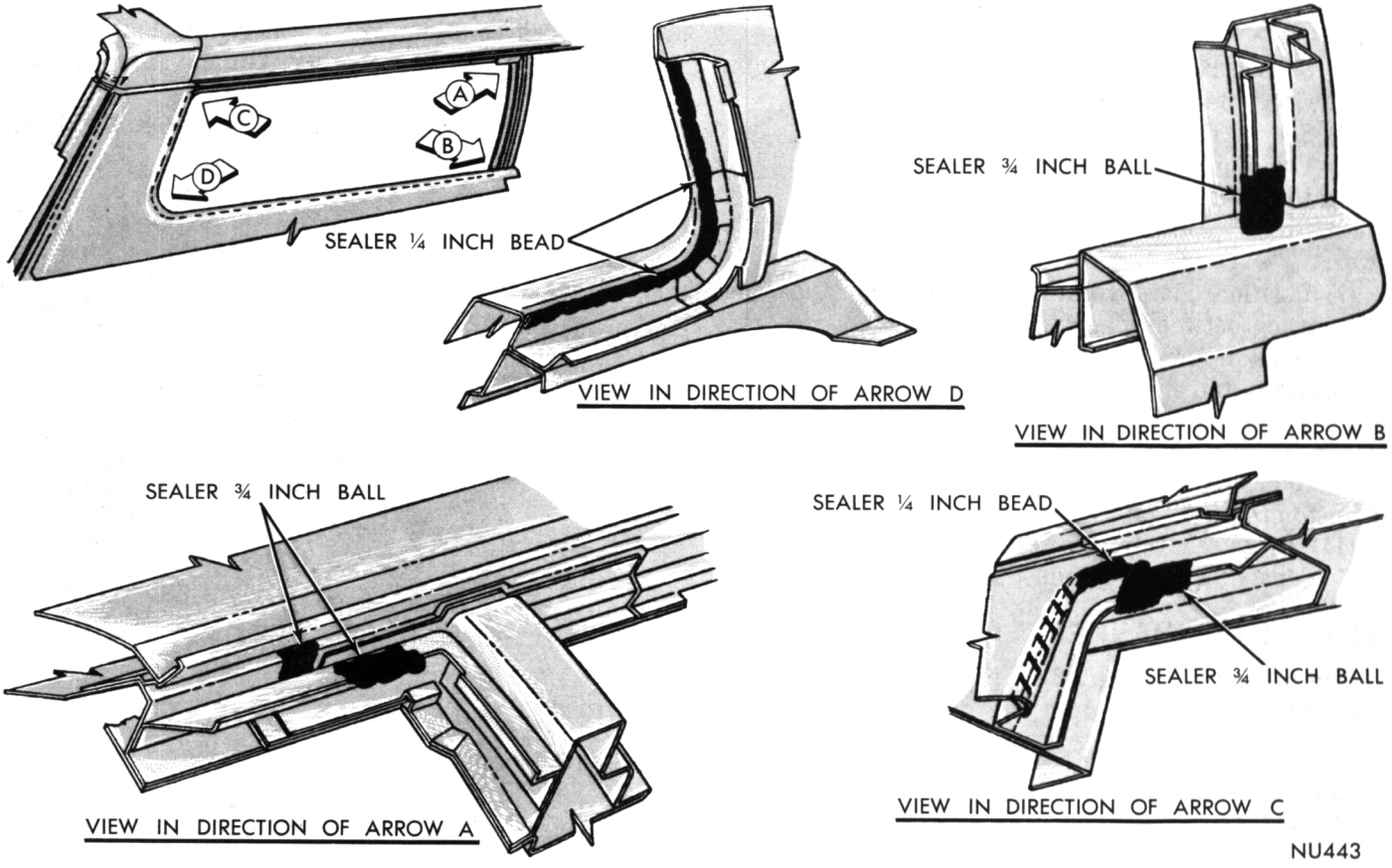

Fig. 76—Quarter Window Sealing Areas

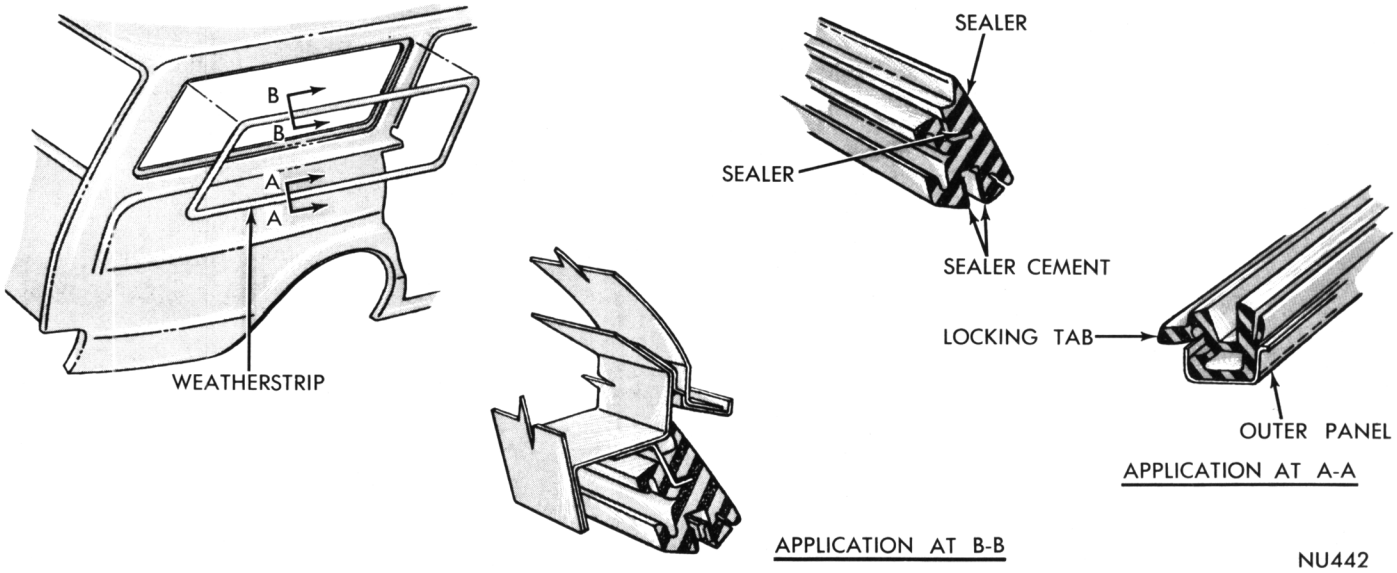

Fig. 77—Weatherstrip Replacement

(9) Apply and press secure, sealer to joint of glass weatherstrip, outer panel weatherstrip retainer and rear body lock pillar.

(10) Install garnish mouldings and spare tire cover.

QUARTER PANEL EXTENSIONS

Refer to Figures 80 and 81 for attachment applications of the quarter panel extensions.

PANEL SIDE REFLECTOR

The quarter panel side marker reflector and bezel assembly (Fig. 82) is attached with sealer nuts from within the luggage compartments.

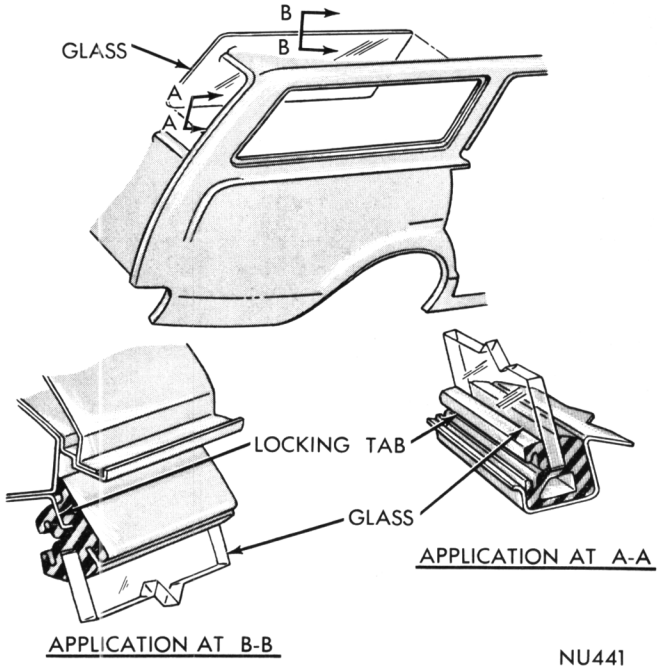

Fig. 78—Glass Replacement

TAIL GATE

Station Wagon Models are equipped with a "two-way" tail gate that can be opened as a swingout type door or in the conventional tail gate manner. The sequence of adjusting the linkage should be followed, as outlined in this service manual, to ascertain correct locking and releasing operations.

ALIGNMENT

Vertical adjustment and in and out adjustments are made at the hinge plate. In and out alignment of the top of the tail gate is adjusted by moving the striker in or out to permit ease of entry of the tail gate glass into the upper run channel. Lateral adjustment to center the tail gate in the body opening is controlled at the hinge (Fig. 83).

WINDOW WASHER SYSTEM

Refer to the Accessory Group for Service Procedures, Tests and Wiring Diagrams.

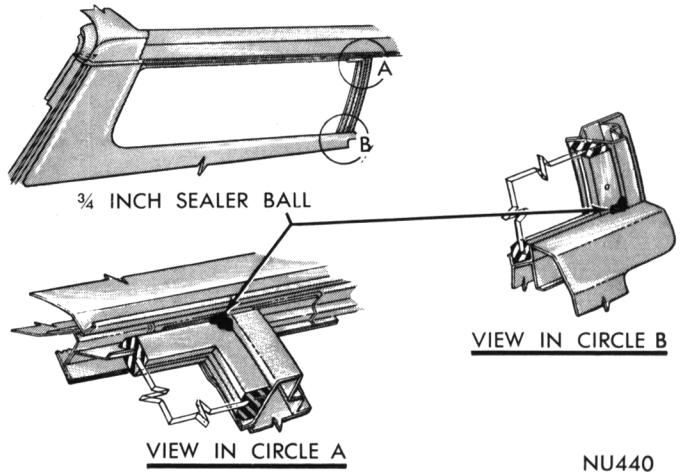

Fig. 79—Sealing Weatherstrip

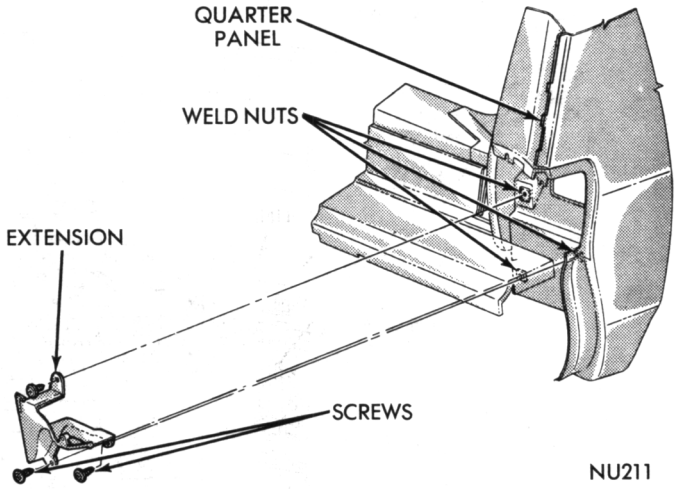

Fig. 80—Quarter Panel Extension—Station Wagon

REPLACEMENT

Removal

Remove trim panel and disconnect terminals at control switch. Disconnect wiper and washer electrical leads.

(1) Remove check arm and torsion bar guide from pillar guide plates.

(2) Support tail gate on jacks or stands.

(3) Loosen hinge pivot pin locking screws (Fig. 83).

(4) Use a pencil and outline hinge plate position on pillar post for future assembly.

(5) Remove hinge plate attaching bolts from pillar post.

(6) Slide hinge plate and torsion bar in through guide toward center of tail gate.

(7) Lower tail gate down and out of body opening.

Installation

(1) With torsion bar and hinge plates pushed in toward center of tail gate, engage hinge plates into lower opening of body.

(2) Attach hinge plate attaching bolts into pillar posts and locate hinge plates in relation to previous marked positions.

(3) Tighten attaching bolts firmly enough to hold position and inspect alignment.

(4) Close tail gate and center in opening.

(5) Attach torsion bar bracket to pillar post.

(6) Open tail gate and tighten locking screws on hinge pivot pin.

(7) Connect electrical leads and install trim panel.

(8) Operate tail gate window and inspect alignment.

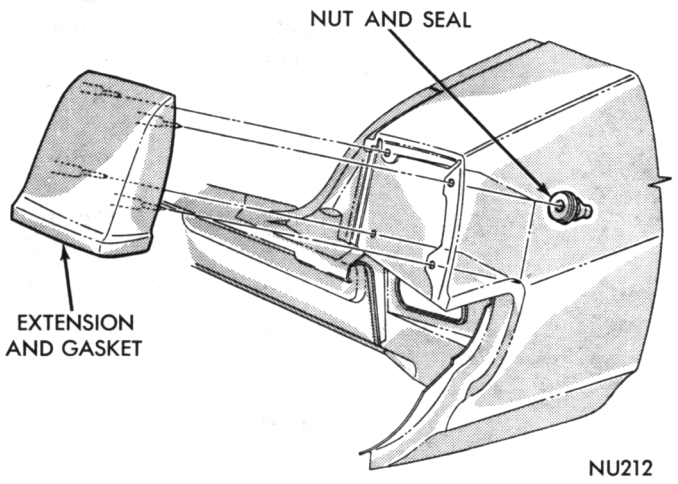

Fig. 81—Quarter Panel Extension—Except Station Wagon

TRIM PANEL

The tail gate trim panel is attached with metal screws. Clean all foreign material from the seating area of the trim panel before installing.

LOCK

To replace the lock assembly (Fig. 83) remove trim panel glass and glass runs. The lock assembly is retained on tail gate by screws accessible at end of tail gate.

LOCK CYLINDER

The tail gate lock cylinder assembly is retained on the outer panel with a horseshoe type retainer (Fig. 83).

LOCK LINKAGE

Installation and Adjustment (Fig. 84)

The lower right to upper right latch link and upper right lock to release regulator mechanism arm link can only be adjusted to three total turns from nominal position for all release, interlocking and latch engaging operations.

(1) Inspect locks to make certain they are in the fully latched position.

(2) Install link to lower right latch detent clip, raise upper right lock actuator until it contacts upper

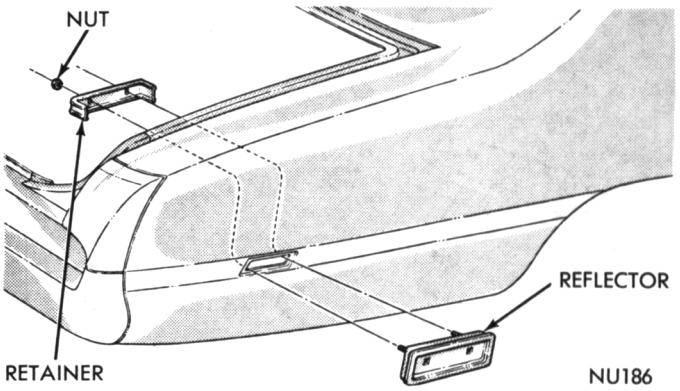

Fig. 82—Panel Side Reflector

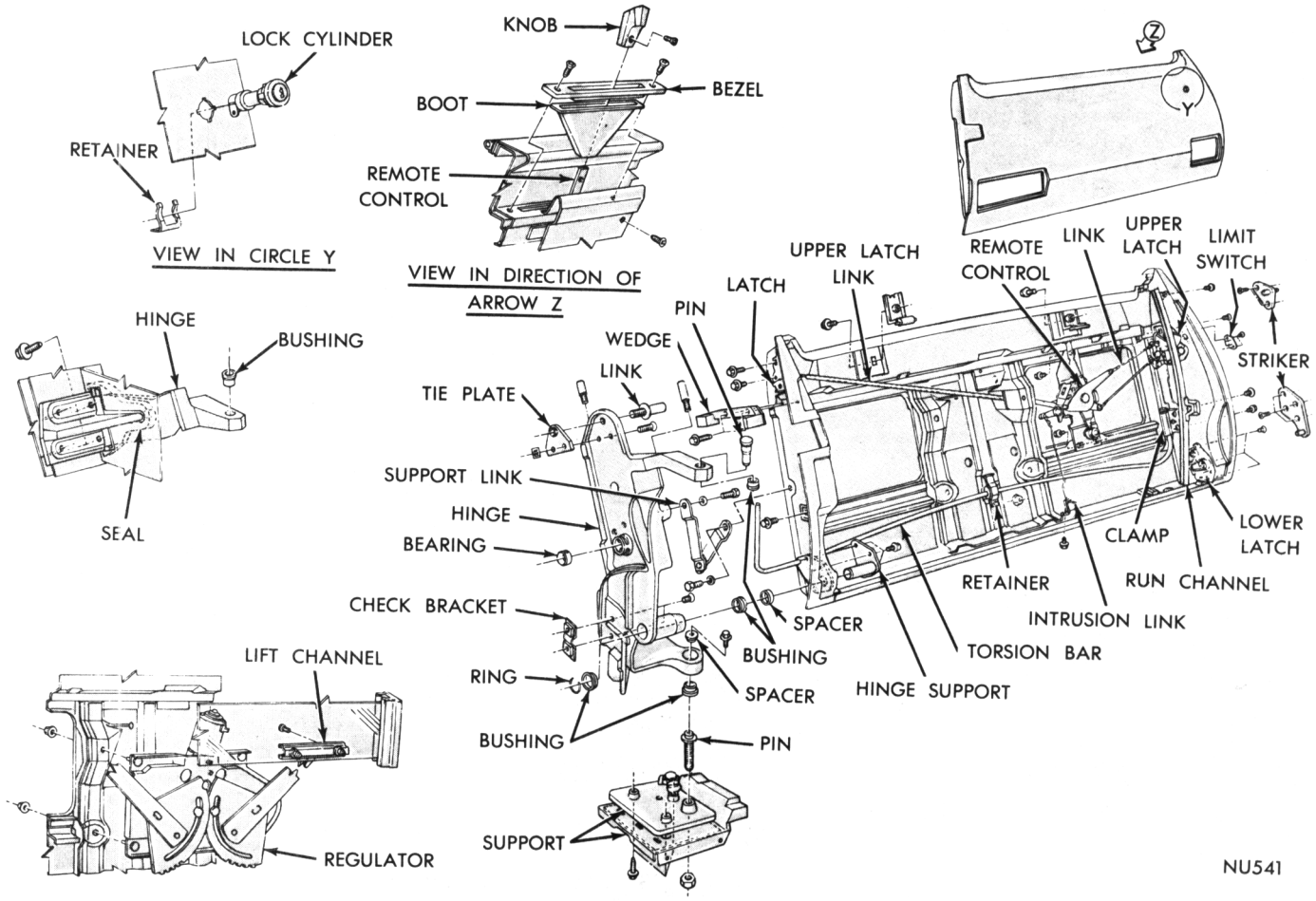

Fig. 83—Tail Gate Assembly

(3) Adjust threaded portion of link until aligned with clip hole of actuator and insert link into clip.

(4) Connect link to upper right lock remote control lever and to release regulator mechanism actuator.

(5) Install link from release regulator arm to the glass restraining bracket.

(6) Install link into release regulator mechanism and upper left latch remote lever clip.

(7) Install link into lock remote lever.

(8) Take up all play in latch remote lever and release regulator mechanism arm and adjust link threaded end to this point.

(9) Install link into upper right lock remote lever and test operation of tail gate and door assembly.

GLASS

Adjustments

The circled numbers shown on the glass adjustment reference illustration (Fig 85) indicate the particular step number being read in the adjustment procedure.

Prior to adjusting glass, the tail gate must be correctly fitted to its' opening, the inner belt weatherstrip installed and all glass and related hardware component attaching screws and nuts loosened.

(1) With tail gate opened in tail gate position, push glass against belt inner weatherstrip and snug secure upper screws of lower glass run channel.

(2) With tail gate closed, from inside body, run glass up far enough to engage and align lower end of upper run channel. Snug secure bottom screw in upper run channel.

(3) Align top end of upper run channel with tail gate header run retainer and snug secure screws.

(4) Raise glass to approximately 1/8 inch below roof rear glass run and adjust regulator so top of glass is parallel to roof glass run. Snug secure regulator attaching nuts.

(5) Open tail gate to gate position and secure lower nut on glass run of tail gate.

(6) Close tail gate, test for ease of operation and inspect alignment.

Tighten callouts 7, 8 and 9 securely.

GLASS REPLACEMENT

Removal

(1) Support glass at bottom and remove glass to lift bracket screws (Fig. 86).

(2) Slide glass up and out of door.

(3) Remove lift channel fasteners from glass (Fig. 81).

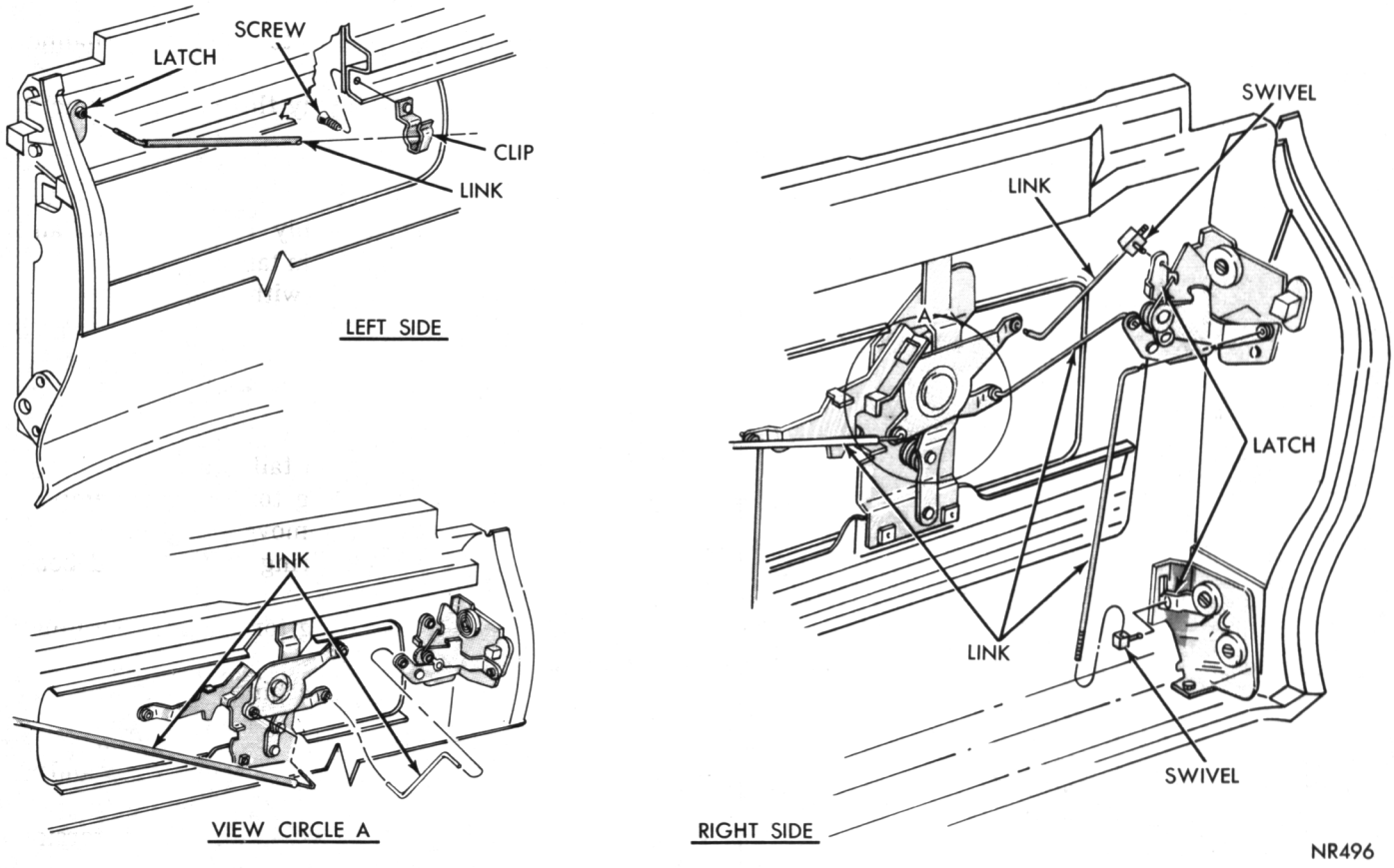

Fig. 84—Lock Linkage Adjustments

Installation

Utmost care must be used to prevent lubricant from touching wiper blades.

(1) Apply lubricant to surfaces of glass lift channel contacting regulator sliding block.

(2) Install lift channel fasteners in glass.

(3) Lower glass into runs of lower glass channels to a position under the lift channel on each regulator arm.

(4) Align holes in lift channels with glass lift fasteners and secure with screws.

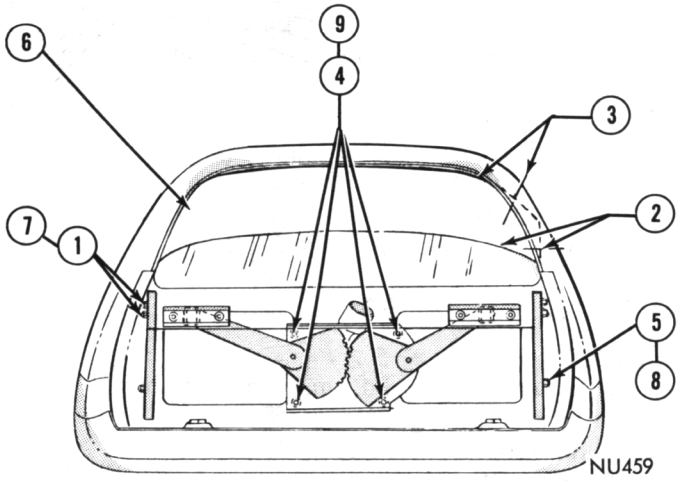

Fig. 85—Tail Gate Glass Adjustments

Glass Lift Channels

To replace the glass lift channels (Fig. 86) it is necessary to first remove the glass assembly. The channels are positioned over sliding blocks on the regulator arms.

Regulator Replacement

The electric regulator assembly is retained on the tail gate inner panel with nut and washer assemblies (Fig. 87). **Be sure wiper actuator mechanism is in OFF-GLASS position during replacement of regulator.**

Removal

(1) Remove tail gate glass and glass lift channels.

(2) Disconnect electrical leads at regulator.

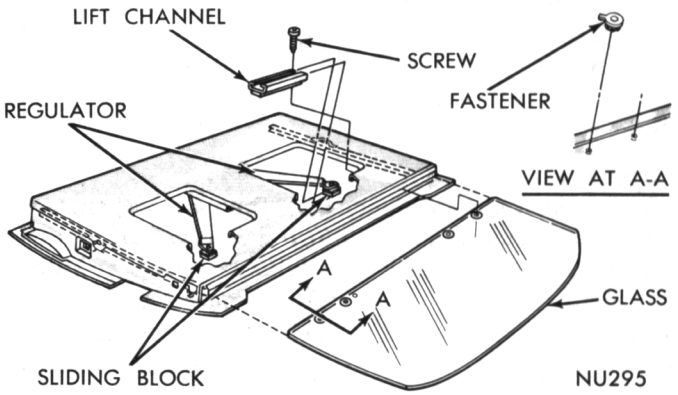

Fig. 86—Glass Replacement

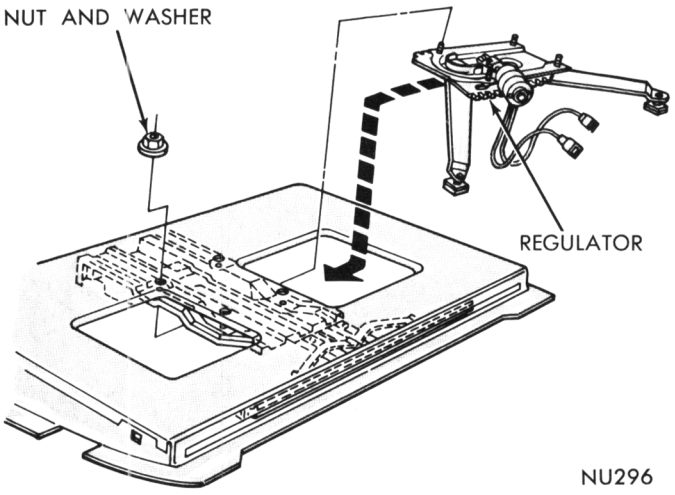

Fig. 87—Regulator Assembly

(3) Remove regulator at inner tail gate panel nut and washer assemblies.

(4) Remove regulator assembly through large access hole on right side.

Installation

(1) Position regulator in tail gate through large access hole on right side.

(2) Position regulator mounting studs in holes of inner panel and install nut assemblies: **It may be necessary to tilt and secure one corner of regulator mounting, then the opposite corner and finally the remaining two nuts on units equipped with the window washer assembly.**

(3) Connect electrical leads.

(4) Position glass lift channels on regulator sliding blocks.

(5) Install tail gate glass assembly.

Glass Run Channel

Removal

(1) Remove the tail gate glass assembly.

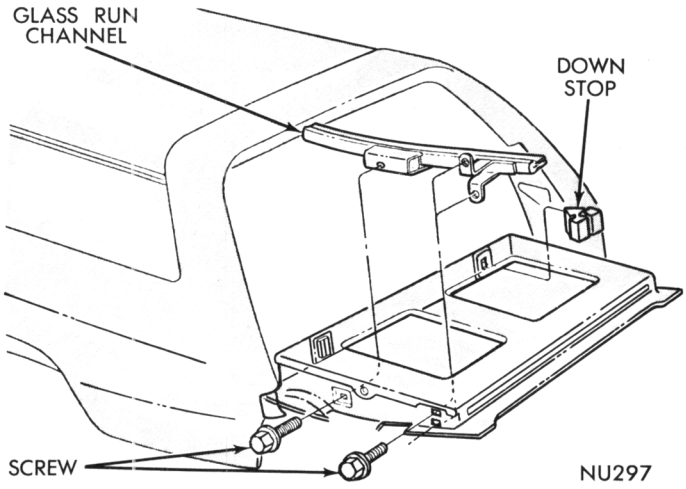

Fig. 88—Glass Run Channel

(2) Remove tail gate pillar to glass run channel screws (Fig. 88).

(3) Remove channel assembly through access holes in inner panel.

Installation

(1) Position channel assembly into tail gate and align to upper and lower holes in tail gate pillar.

(2) Secure channel to pillar with screws.

(3) Install glass assembly.

TORSION BAR

Removal

(1) Remove trim panel from tail gate.

(2) Remove screws attaching torsion bar clamp to tail gate pillar (Fig. 83) and remove clamp.

(3) Remove torsion bar bearing retainer and bearing.

(4) Remove screws attaching torsion bar and hinge to tail gate.

(5) Remove torsion bar from hinge.

Installation

(1) Lubricate torsion bar at right hinge area and at torsion bar bearing area.

(2) Install hinge on torsion bar and insert torsion bar into tail gate.

(3) Position hinge to tail gate and install mounting screws. Tighten screws.

(4) Install bearing and bearing retainer on torsion bar (Fig. 83). Tighten retainer nut.

(5) Position clamp over end of torsion bar and from outside end of tail gate install attaching screws.

(6) Install tail gate trim panel.

Rear Header Weatherstrip

The roof rear header weatherstrip is a press fit in

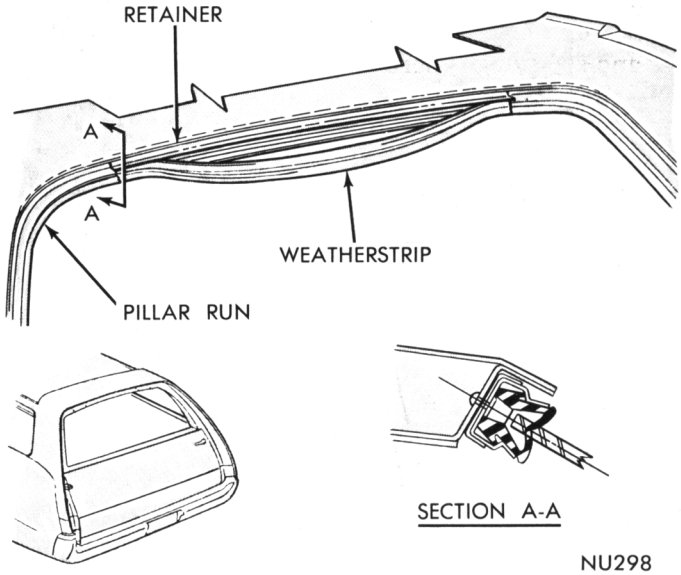

Fig. 89—Rear Header Weatherstrip

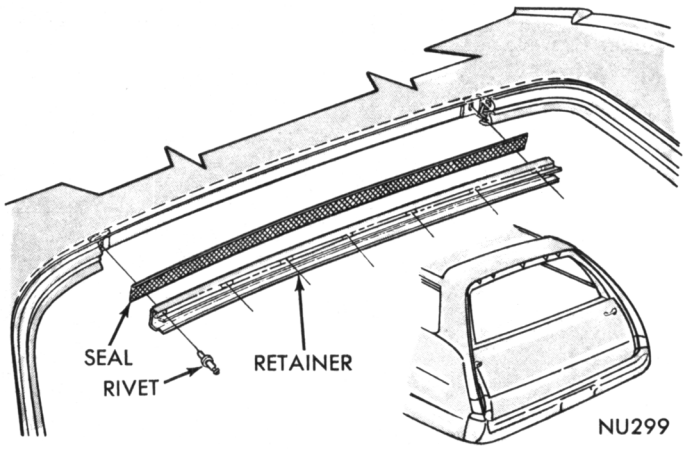

Fig. 90—Rear Header Weatherstrip Retainer

the retainer (Fig. 89). Position the ends first to form a seal with the quarter pillar runs.

Rear Header Weatherstrip Retainer

The roof rear header weatherstrip retainer is attached to the header with "pop" rivets (Fig. 90). The seal has adhesive applied to one side which attaches it to the retainer. Trim the ends of the seal flush with the retainer.

Pillar Weatherstrip—Retainer and Seal

The tail gate upper pillar, retainer, seal with weatherstrip is retainer on the pillar with screws (Fig. 91). The seal has adhesive applied to one side which attaches it to the retainer. The outer weatherstrip and clip assembly is held in position in the retainer by the weatherstrip clips. Index top edge of outer weatherstrip flush with top edge of inner weatherstrip. Secure weatherstrip by pressing weatherstrip clips into notches in retainer.

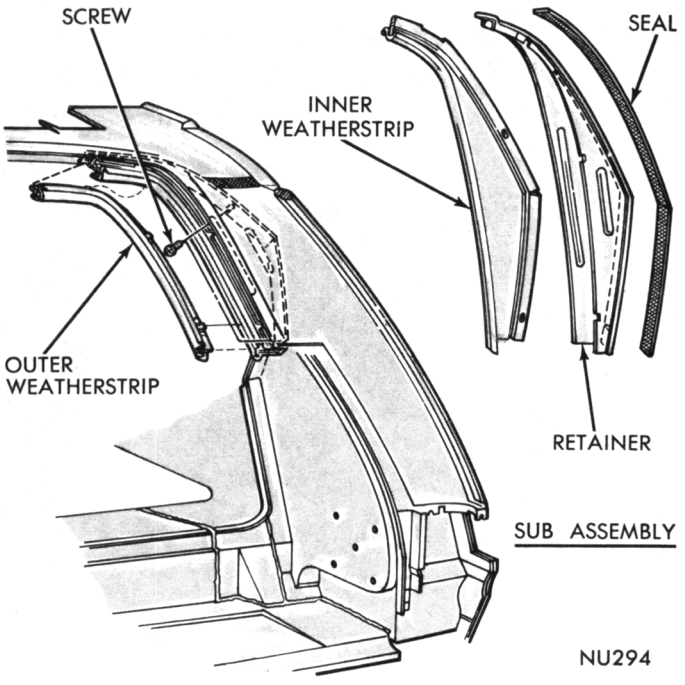

Fig. 91—Pillar Weatherstrip—Retainer and Seal

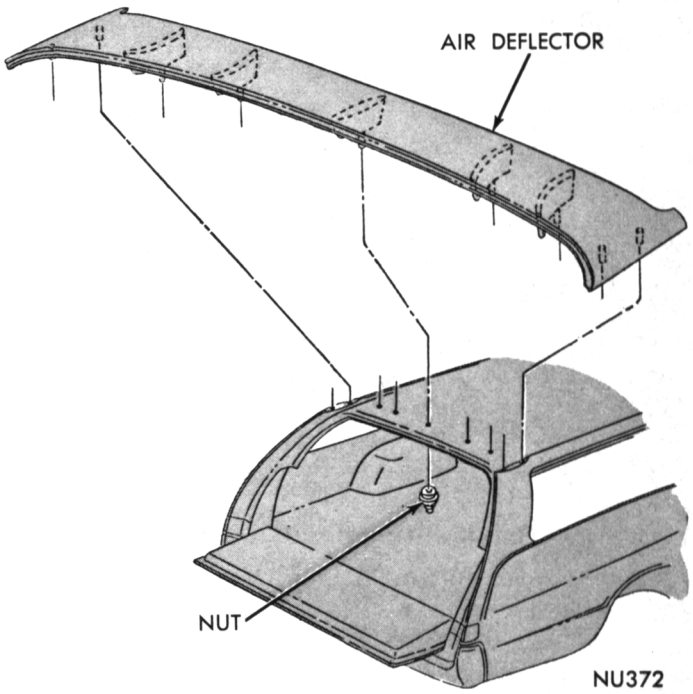

Fig. 92—Roof Rear Air Deflector

ROOF REAR AIR DEFLECTOR

The rear air deflector (Fig. 92) used on station wagon models is mounted on the roof by inserting the deflector studs through holes drilled in the panel and securing with sealing type nuts from the car interior. Tighten the nuts 75-115 inch-pounds.

DECK LID

ALIGNMENT

The deck lid hinge (Fig. 93) to lid attaching holes

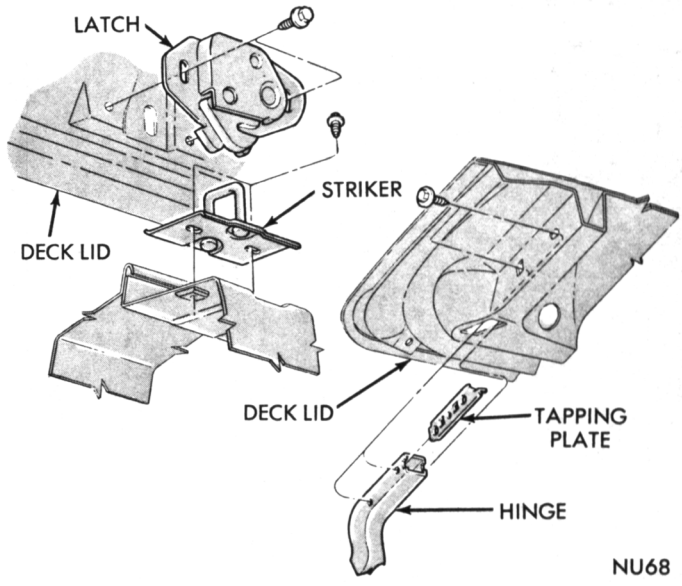

Fig. 93—Deck Lid Hinge and Latch

are slightly oversize, allowing slight to and fro, and, in and out adjustment.

REPLACEMENT

The deck lid is attached to each hinge by two screws. An assistant's aid is recommended when replacing lid to prevent it sliding rearward and damaging paint, also to aid in aligning of hinge screw holes when installing.

LOCK

REPLACEMENT

The deck lid lock (Fig. 94) is attached to the deck lid by two screws. Scribe location of lock mounting flanges to aid in installation. On vacuum actuated units, disconnect vacuum hose.

Adjustment

Vertical adjustment of lock is made at the attaching screws and side adjustment is made at the striker attaching bolt.

Cylinder Replacement

The lock cylinder is retained by a spring steel "U" shaped clip (Fig. 94).

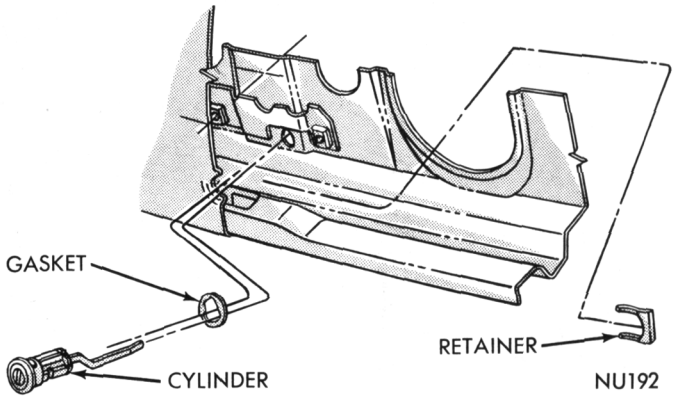

Fig. 94—Deck Lid Lock Cylinder

VACUUM ACTUATED DECK LID LOCKS

The vacuum actuated deck lid lock release system (Fig. 95) consists of a vacuum tank mounted over the right front wheel housing, a push button control switch and a vacuum actuated diaphragm assembly connected to the lock. Vacuum is supplied to system from intake manifold. Rubber hoses are used to connect component units.

If failure of the system is accompanied with a rough engine idle, remove hose from manifold fitting tube and plug end of the tube. If engine idle improves noticeably, inspect hoses for possible leaks.

Should system fail to operate entirely, remove hose at the release diaphragm in deck lid and connect a vacuum gauge to hose. With engine running, actuate

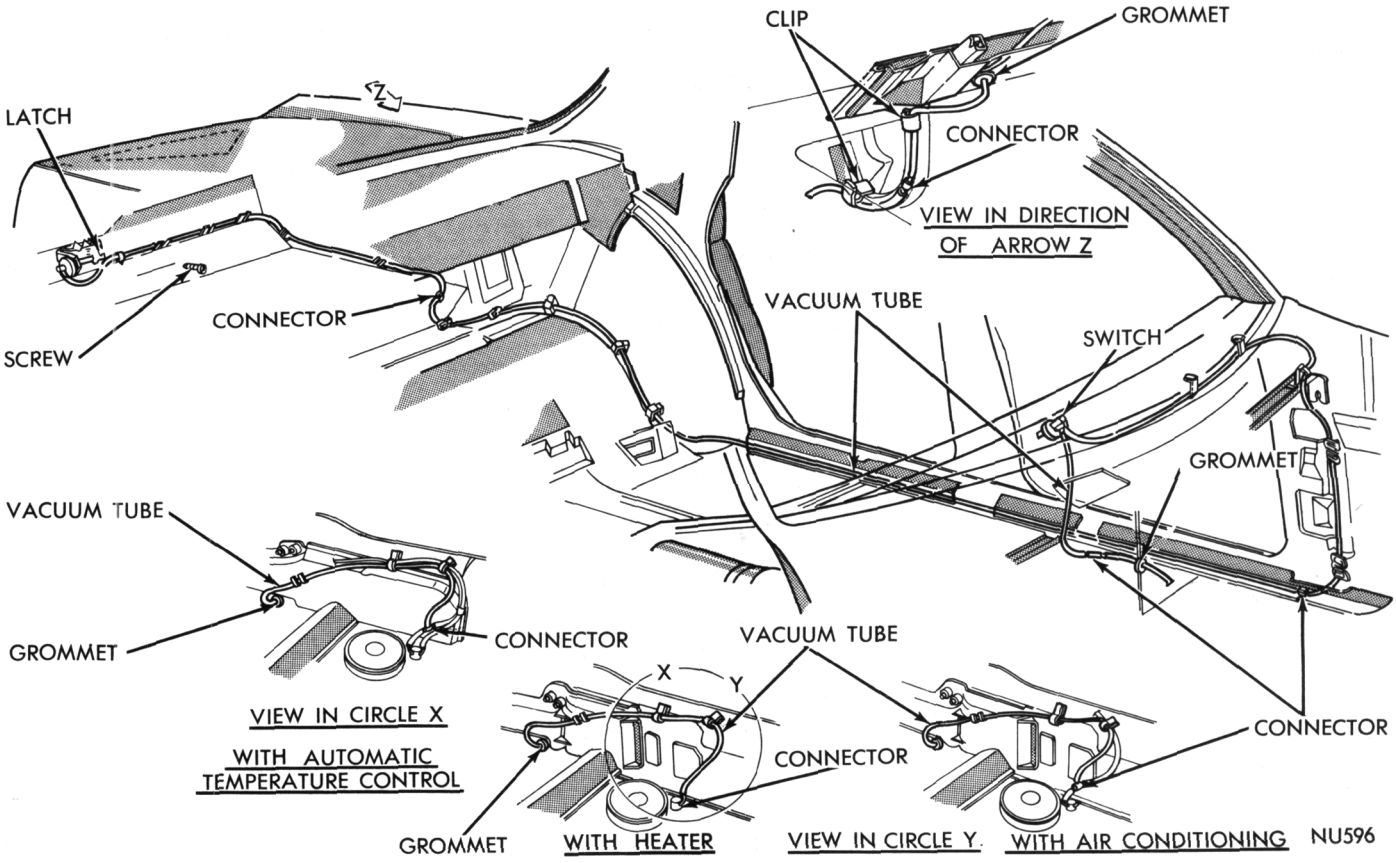

Fig. 95—Vacuum Actuated Deck Lid Lock

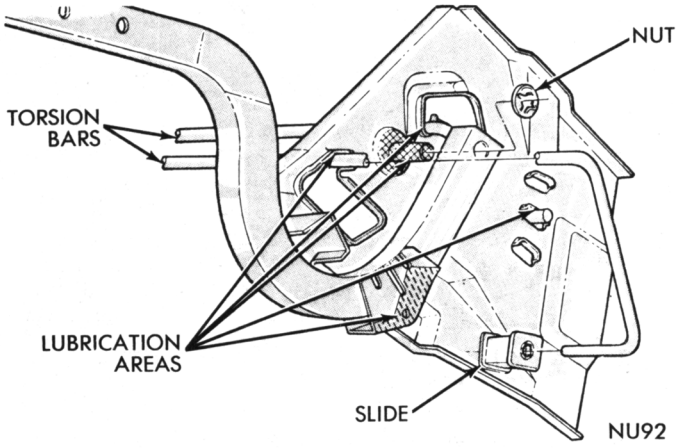

Fig. 96—Deck Lid Torsion Bar

button in glove box while a helper observes gauge. If no reading can be obtained, inspect for a pinched hose. A reading of less than 16 inches will indicate a leak in the system.

HINGE

Removal

(1) Remove deck lid assembly and disengage torsion bar from hinge (Fig. 96) being removed.

(2) Remove hinge to hinge bracket spring nut and remove hinge.

Installation

(1) Position hinge on bracket pin and install a new spring nut.

(2) Install deck lid, connect torsion bar and inspect alignment.

TORSION BAR

Removal

Use care when removing torsion bar as it is under a load. Release load from torsion bar slowly and remove from support bracket.

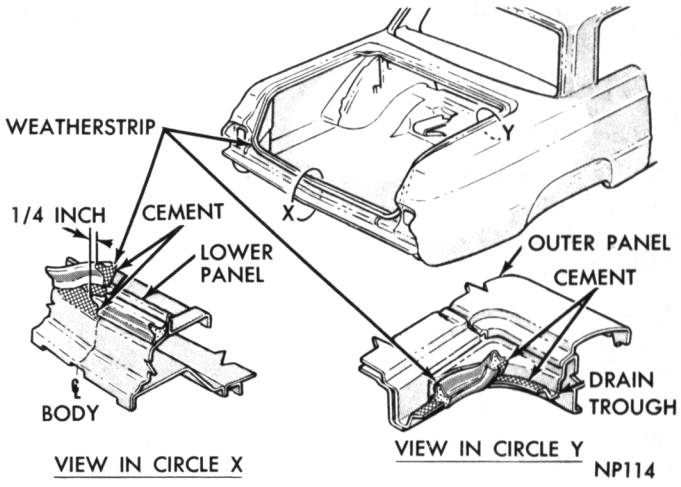

Fig. 97—Deck Lid Weatherstrip

(1) Remove torsion bar (Fig. 96) from adjustment slot.

(2) Push bar out of roller in hinge arm and remove from hinge support.

Installation

(1) Position torsion bar into hinge support and insert end into roller in hinge arm.

(2) Hook torsion bar into support bracket.

(3) Wind bar and insert end into center adjusting slot.

(4) Place lid in various open positions and test tension.

(5) Adjust bars until deck lid stays in open position.

WEATHERSTRIPS

Apply an even continuous coat of cement to entire weatherstrip contact surface of deck lid opening (Fig. 97). Install weatherstrip, make sure weatherstrip molded corners are correctly positioned.

INTERIOR TRIM AND SEATS

INDEX

	Page
INTERIOR TRIM	
Floor Covers	99
Scuff Plates	99
Garnish Mouldings	99
Glove Box	102
Headlining-Fabric	99
Hardboard	101
Moulding and Retainer	101
Scuff Plates	99
Trim Panels-Instrument Panel	99
Package Shelf and Silencer	104
SAFETY BELTS	111
SEATS	
Adjustment	105
Cover Replacement	111
Front Seat	
Back Latch	106
Reclining Mechanism-Bucket Type	107
4 Door Models	108
Replacement	108
Rear Seats	
Replacement-Back	110
Cushion	109
Station Wagon—2nd Back	109
Cushion	109
3rd Back	109
3rd Back and Panel	109
3rd Cushion	110

SERVICE PROCEDURES

INTERIOR TRIM

GARNISH MOULDINGS

When removing a garnish moulding that is overlapped by an adjoining moulding, loosen the end attaching screw to prevent possible damage to both mouldings.

To assure correct alignment when installing the mouldings; install the screws finger tight, align moulding at each end and tighten screws. **Use care not to draw screws down too much or the moulding will be damaged by metal stretching at the screw holes.**

Removal and installation procedures for the garnish mouldings are covered with the related component.

INSTRUMENT PANEL TRIM PAD

The instrument panel trim pads are attached with stud type retainers and nuts (Figs. 1 and 2) on Satellite and Fury Models. On Valiant-Barracuda Models, screws are also used at the lower end (Fig. 3). When installing a trim panel, do not tighten nuts until trim panel has been aligned.

CONSOLE

The consoles (Fig. 4) are attached to welded brackets on the floor pan tunnel with screws and bolts. To loosen the rear mountings, raise the carpet lower edges to expose the screw and bolt. All other attaching screws are accessible from within the console.

FLOOR COVERING

Scuff Plates

The scuff plates and extensions are retained to the floor sills, quarter inner panels and support brackets with metal screws. When replacement of a sill scuff plate is required, a continuous 1/4 inch bead of sealer should be applied at the ends and outer edge.

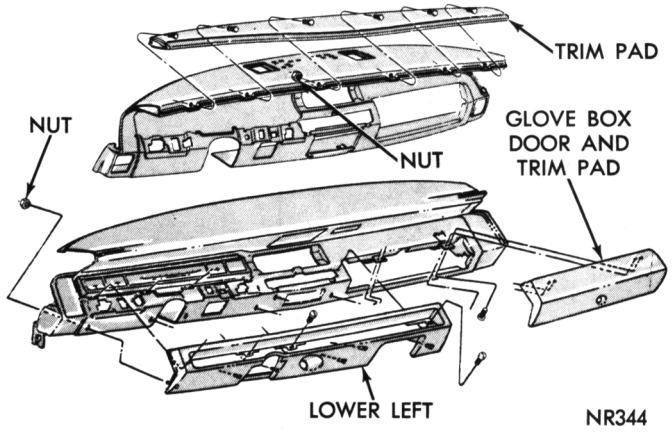

Fig. 1—Instrument Panel Trim Pads—Satellite

Floor Covering

The front seat mounting brackets are positioned on top of both front and rear floor covers. The rear floor covering is positioned under the front covering. To remove the rear floor covering it is necessary to remove the front seat assembly and the rear seat cushion.

Center Floor Panel (Fastback)

The center floor pan panel carpet is attached to a foundation with cement. The foundation is also cemented to the panel. The moulding at the forward end of panel is attached with screws at the front side of moulding.

HEADLINING

Removal—Fabric Type (Satellite—Fury Models)

(1) Remove rear seat cushion, dome light, bezel and lens, sun visors, rear view mirror and coat hooks.

(2) Remove headlining from cemented areas at windshield header and rear window opening.

(3) Remove headlining from under shelf panel.

(4) Using a dull bladed putty knife, disengage fabric from side rail retainer (Figs. 5, 6 and 7) by gently forcing material up and off of retainers and while maintaining pressure on fabric, pull down and out. Work only small areas at a time.

(5) Remove headlining at the windshield header and from fasteners at rear window area (Figs. 5 and 7).

(6) Remove listing wires from side rail retainers and support wire from rear listing wire (Figs. 8 and 9).

(7) Remove all foreign material and cement from windshield header area and rear window opening areas.

(8) Remove listing wires from headlining and insert in comparable listing of new liner.

Installation

(1) Trim excess listing material even with edges of headlining.

(2) Locate centerline of lining at front and rear ends, cut a small notch as an aid in maintaining headlining alignment during installation.

(3) Locate and mark the centerline points of windshield and rear window openings.

(4) Center headlining at rear window and insert rear listing wire to retainer clips on roof rail extensions.

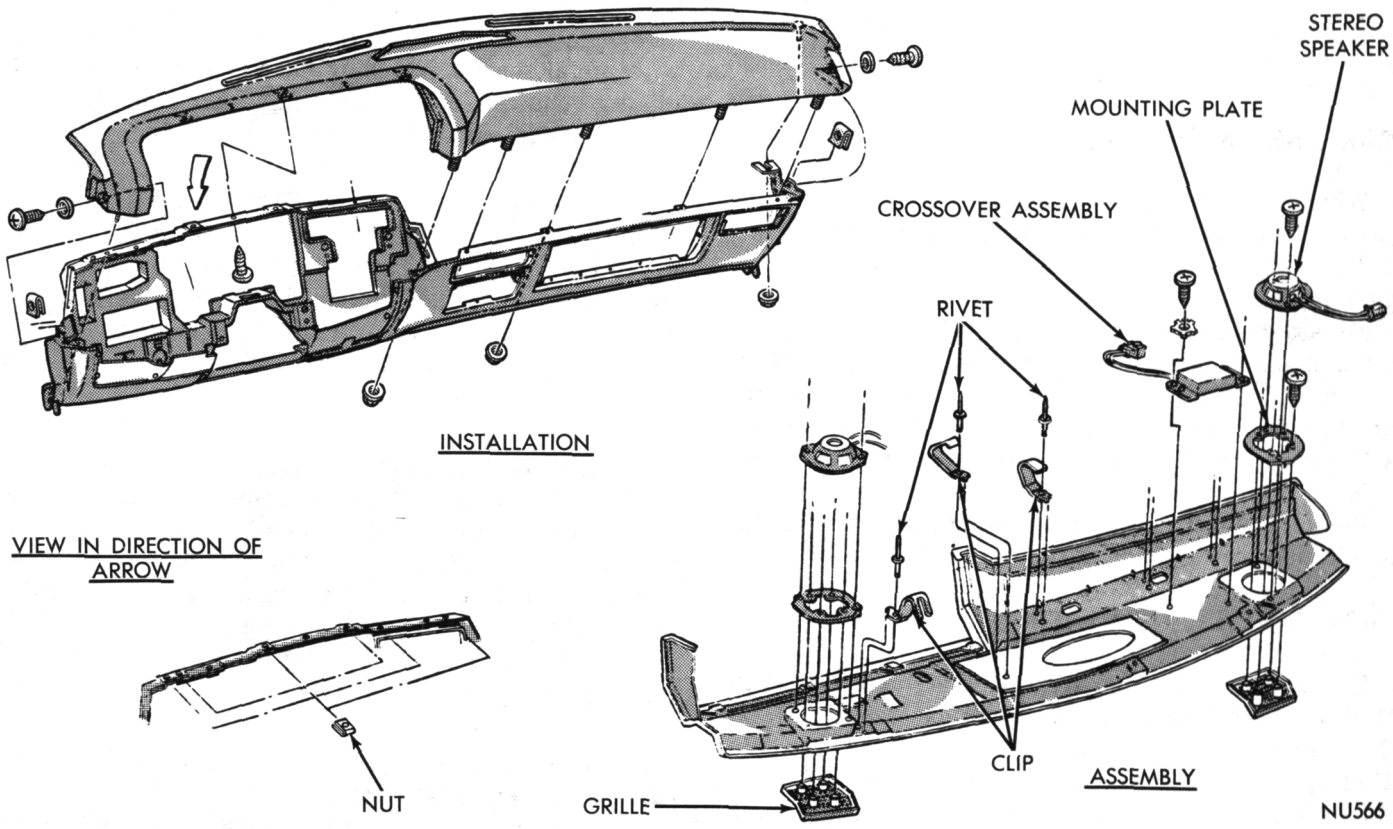

Fig. 2—Instrument Panel Trim Pads—Fury

(5) Hook rear listing wire to wire supports (Fig. 9) and stretch material sufficiently to remove all wrinkles while maintaining front to rear alignment. The same amount of material should hang down at both sides.

(6) Insert remaining listing wires into roof side rail retainers following same cautions as in step 5.

(7) Apply cement to windshield header area and when cement becomes tacky, start at centerline area of windshield and position headlining on cemented area.

(8) Using a dull putty knife, secure liner on barbs at header area, **do not install material at top of windshield posts,** making sure there are no wrinkles and fabric seam is straight.

(9) Locate sun visor mounting bracket screw holes in header and cut holes in headlining slightly larger than attaching screws.

(10) Install sun visors and tuck in corners of headlining at top of windshield posts.

(11) Locate rear visor mirror bracket screw holes, cut holes in fabric slightly larger than screws and install mirror.

(12) When installing headlining at side rail retainers, work only a small section at one time to make certain seams are straight and material is free of wrinkles.

(13) Using a dull putty knife and working alternately from side to side, install headlining on side rail retainers.

(14) Apply cement at rear window opening and to quarter panel area, and after cement becomes tacky, install headlining starting at top center and working outward and down the sides.

(15) Install rear seat cushion and coat hooks.

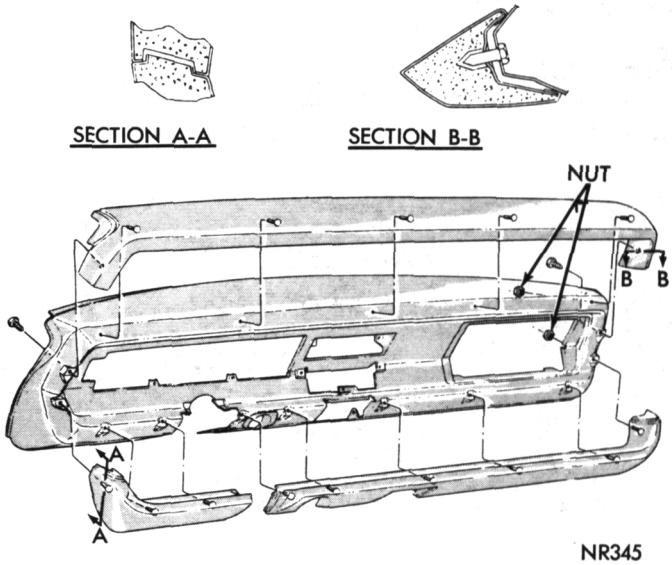

Fig. 3—Instrument Panel Trim Pads—Valiant—Barracuda

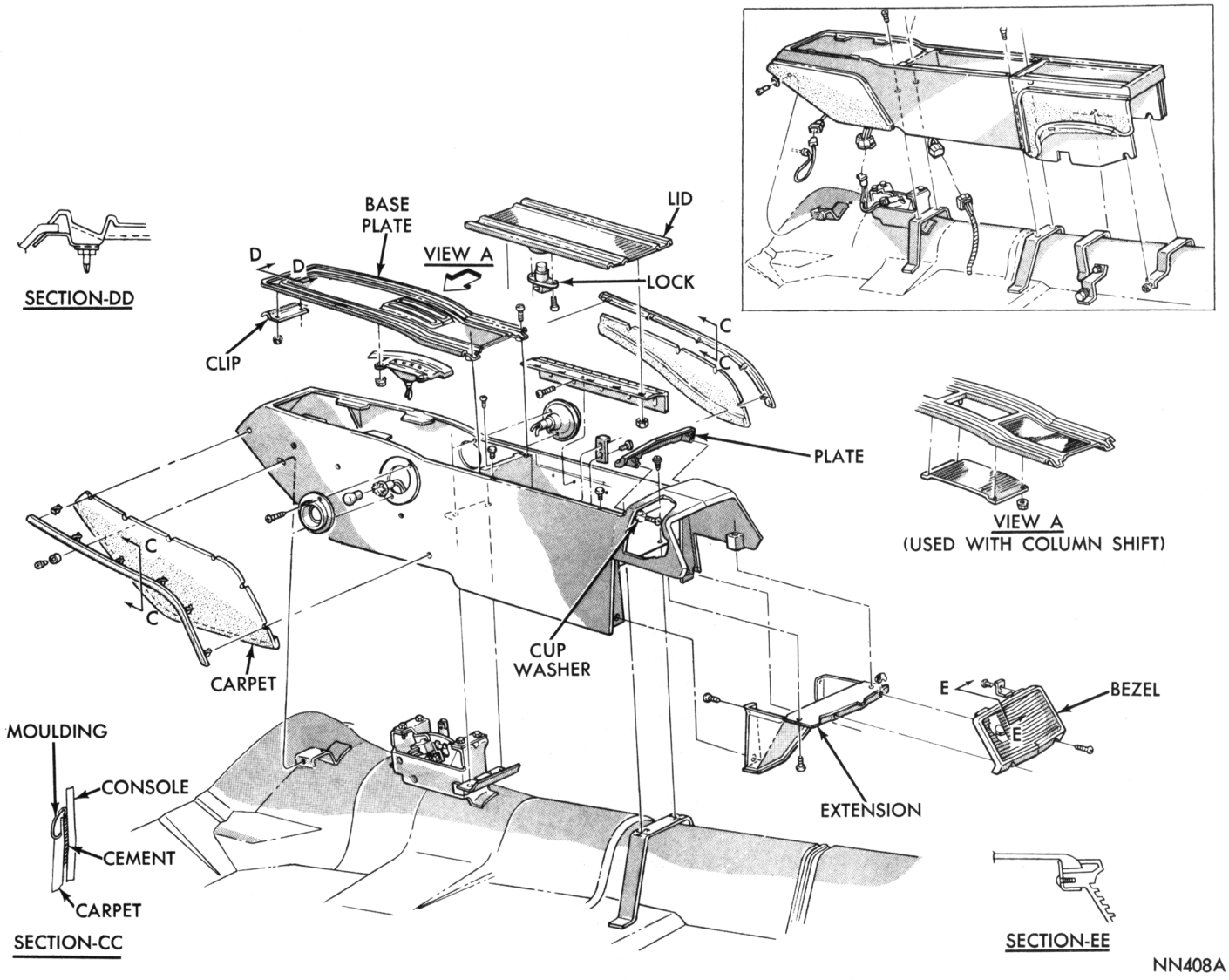

Fig. 4—Console Adaptation

(16) Locate dome light opening and cut out sufficient material for correct lighting. Install dome lamp bezel and lens.

Valiant—Barracuda Models

The headlining is attached to the windshield header, roof side rails and quarter panel areas with cement only (Fig. 10).

Listing wire retainers are installed in slots in the roof side rail and quarter panel areas (Fig. 11).

HARD BOARD LINING

Retainer Moulding Replacement

The individual hard board headlining sections are held in position with semi-flexible type plastic mouldings (Figs. 12 and 13) forced over the retainer sections of the roof bows. Starting at either outer end, remove end cap and pry the moulding off retainer. When installing moulding make certain it is fully seated and evenly spaced from side to side. Install end caps in retainer and over moulding ends.

LINING SECTION

To remove either the front or rear headlining sections, remove the windshield or rear window garnish mouldings and the one bow moulding at the panel inner edge.

Removal

(1) Remove plastic mouldings (Figs. 12 and 13) at edges of section being removed.

(2) Using a fibre tool force liner section off of roof bow and out of side retainers.

(3) Inspect liner section for damaged edges.

Installation

(1) Position liner section on side retainers and in

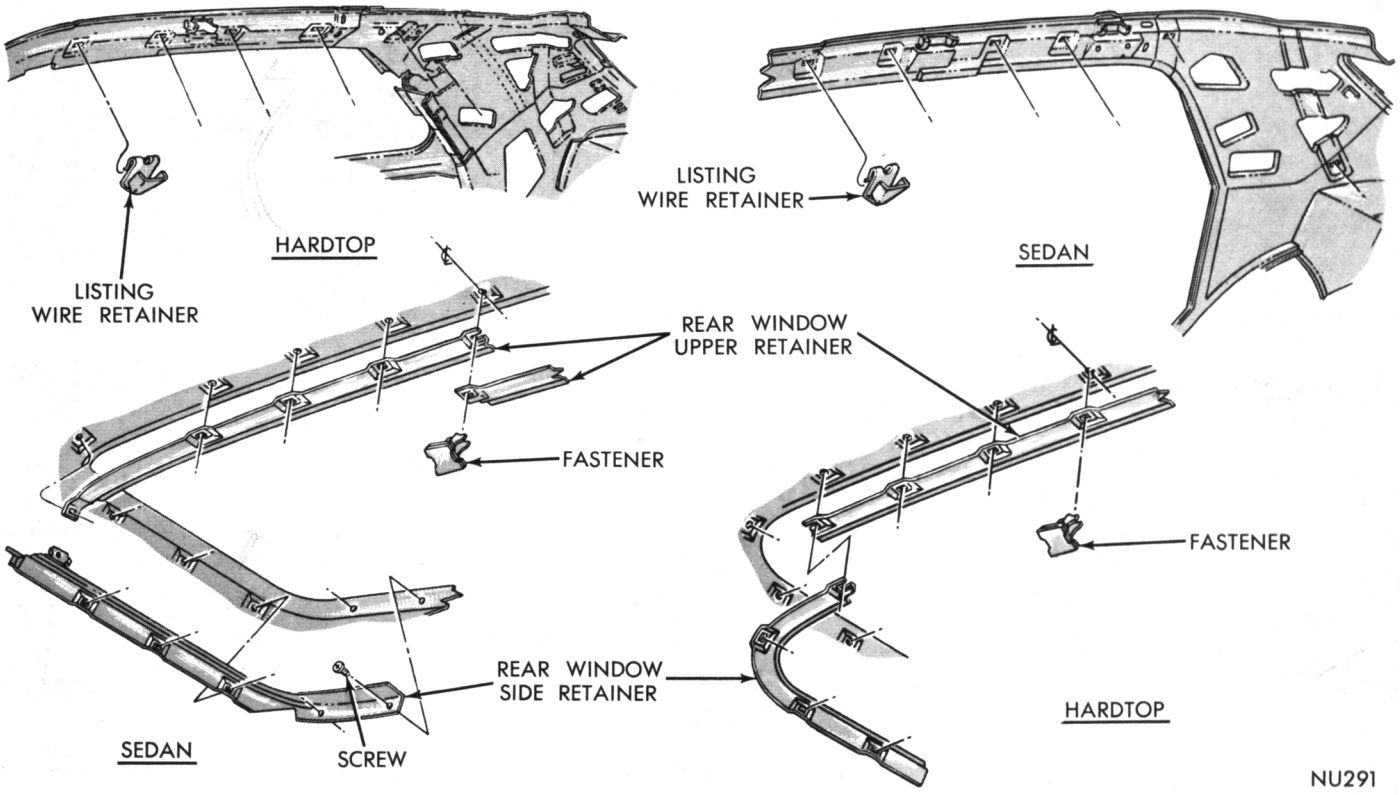

Fig. 5—Listing Wire Retainers—Fury

alignment with mating surface of roof bow.

(2) Push section up at center to seat it in side retainers.

(3) Align edges of section with moulding retainer on roof bows.

(4) Install mouldings on bow retainers and caps over ends.

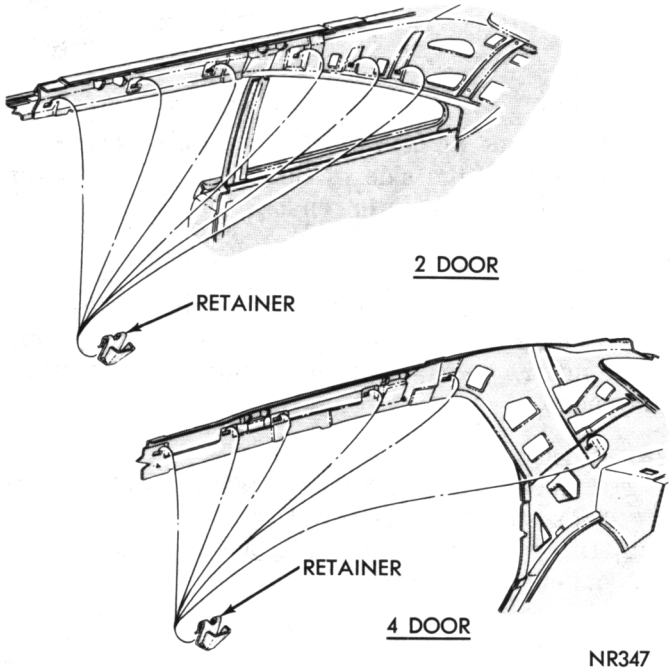

Fig. 6—Listing Wire Retainers—Satellite

Glove Box

The glove box is a one piece folded type (Figs. 14, 15 and 16).

Removal

(1) Remove glove box door (Figs. 17, 18 and 19).

(2) Remove screws attaching box to top and side areas of opening (Figs. 14, 15 and 16).

(3) Remove glove box from under and to rear of instrument panel.

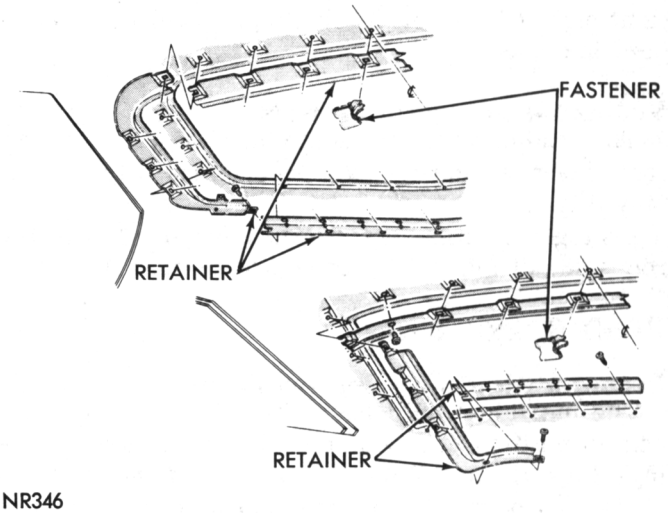

Fig. 7—Rear Window Area Retainers—Satellite

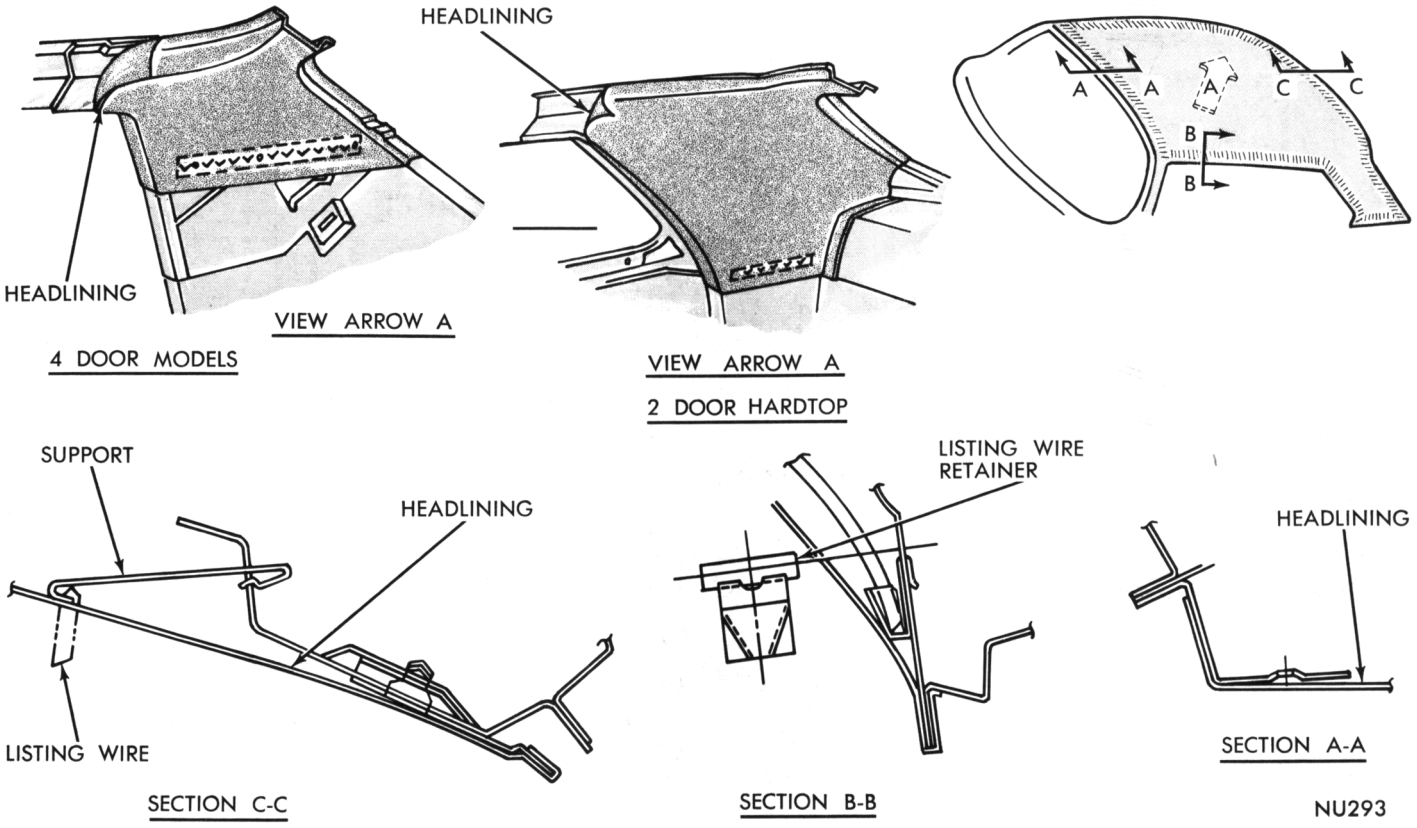

Fig. 8—Headlining Application—Fury

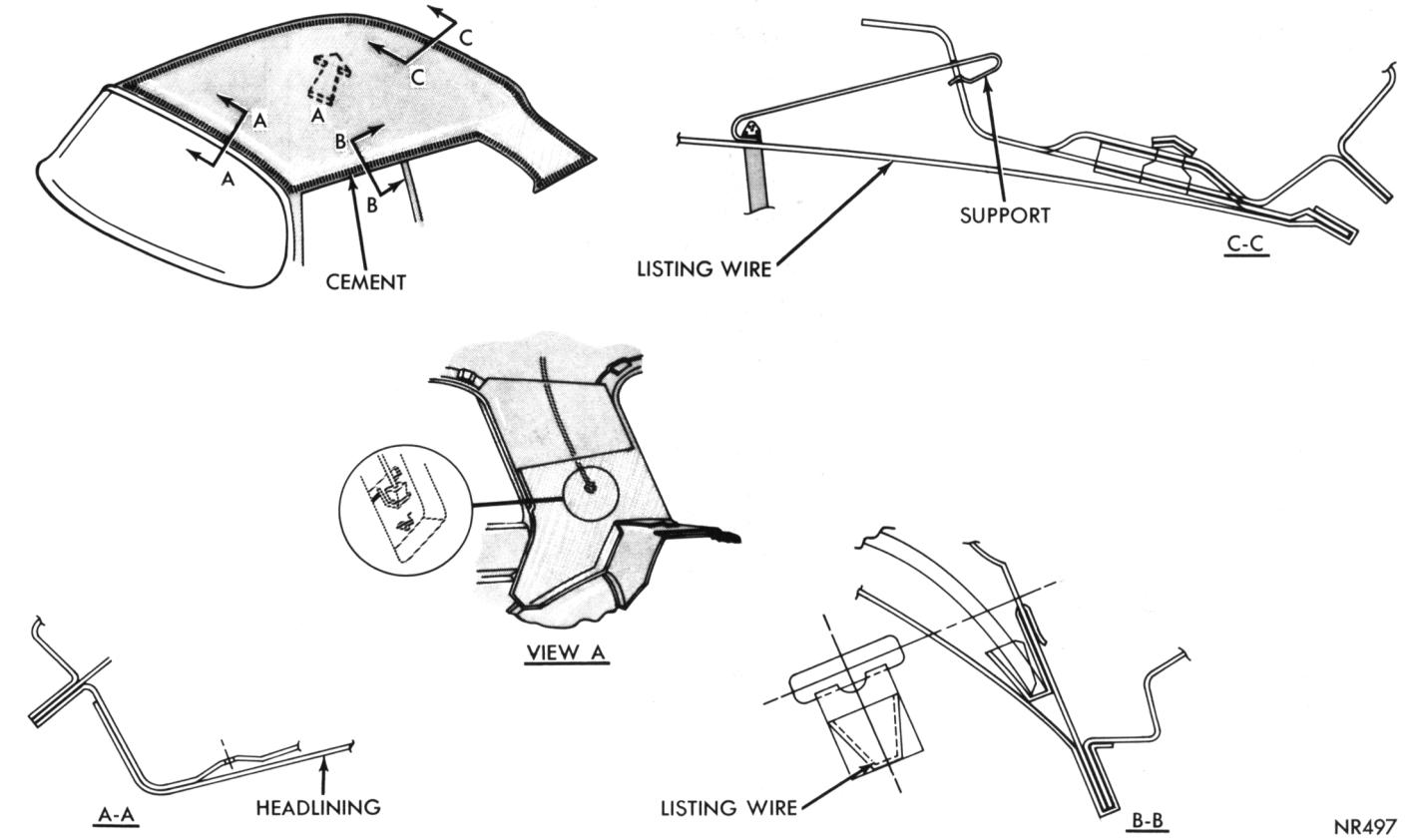

Fig. 9—Headlining Application—Satellite

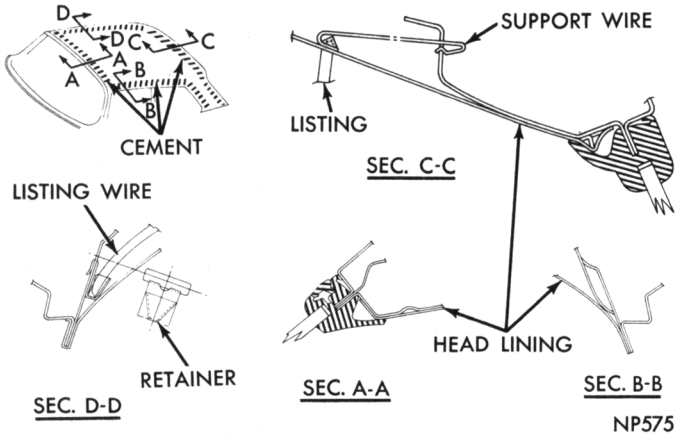

Fig. 10—Headlining Application—Valiant—Barracuda

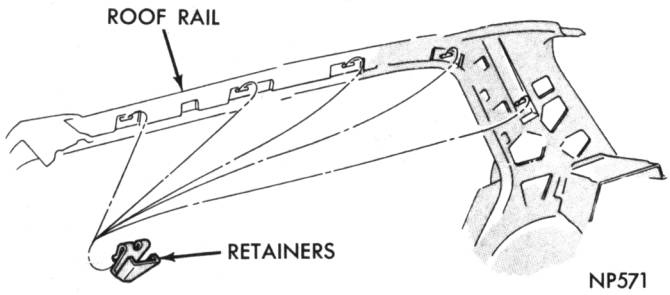

Fig. 11—Listing Wire Retainers—Valiant—Barracuda

Installation

(1) From rear of instrument panel, position glove box in opening, making sure screw mounting holes are aligned.

(2) Install attaching screws at sides to hold in position.

(3) Install glove box door assembly and attaching screws at top.

SHELF TRIM PANEL

Removal

(1) Remove rear seat cushion and back.

(2) Remove defogger outlet and rear window side garnish mouldings.

(3) Loosen cemented end edges of trim panel.

(4) Raise trim panel at front and remove retainers from shelf panel.

(5) Slide trim panel forward and up to remove.

(6) Raise front edge of silencer pad and using a putty knife separate the silencer from cement. Remove silencer.

(7) Remove all cement from shelf panel.

Installation

(1) Apply cement to same areas of shelf panel from which old cement was removed and install silencer pad.

(2) Install retainers in new trim panel.

(3) Slide trim panel into position and press retainers into shelf panel holes.

(4) Apply cement to shelf panel end extensions and press into position.

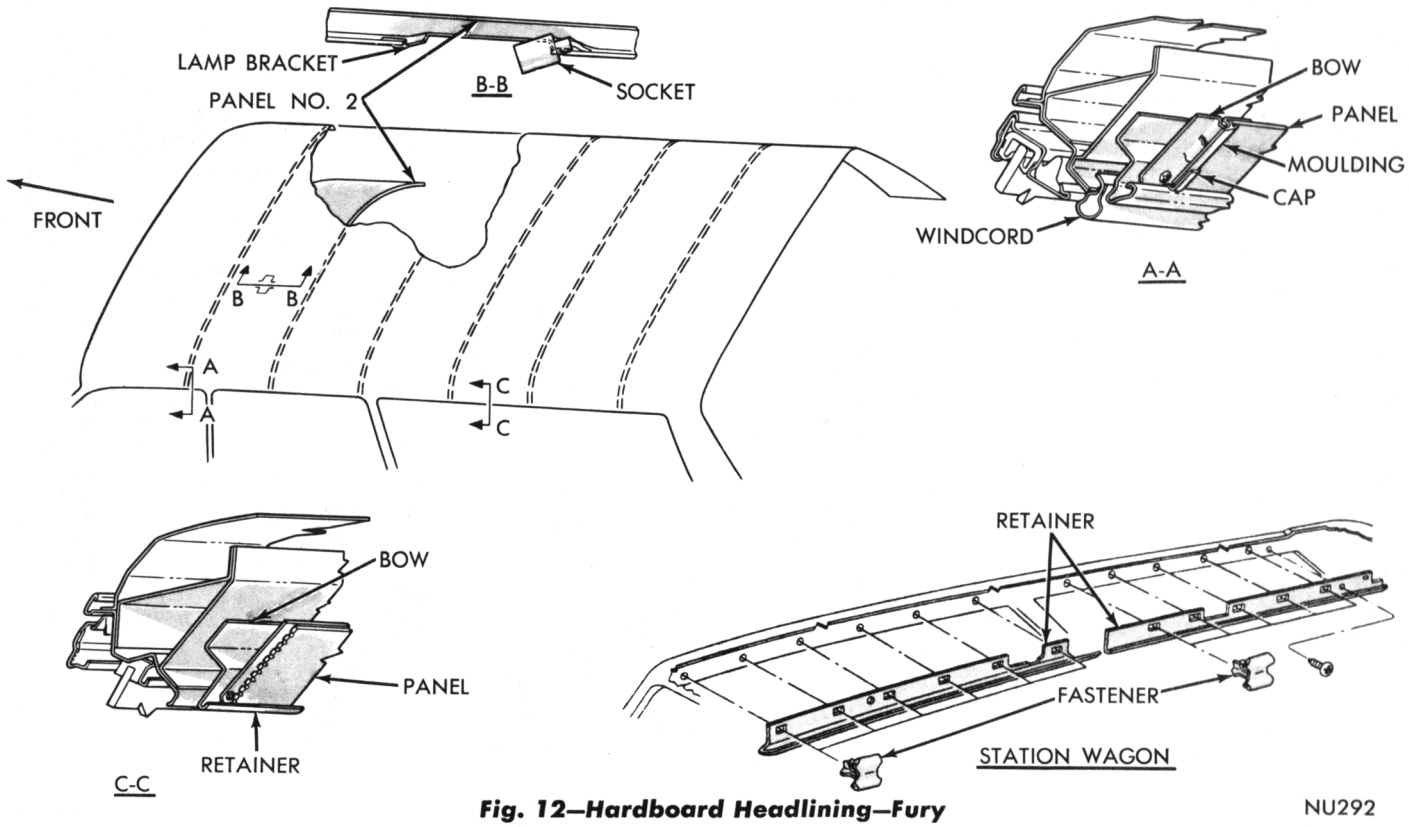

Fig. 12—Hardboard Headlining—Fury

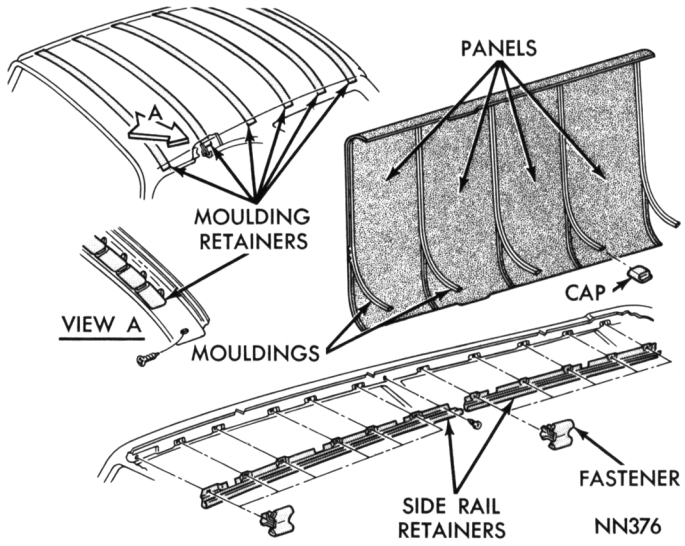

Fig. 13—Hardboard Headlining—Satellite

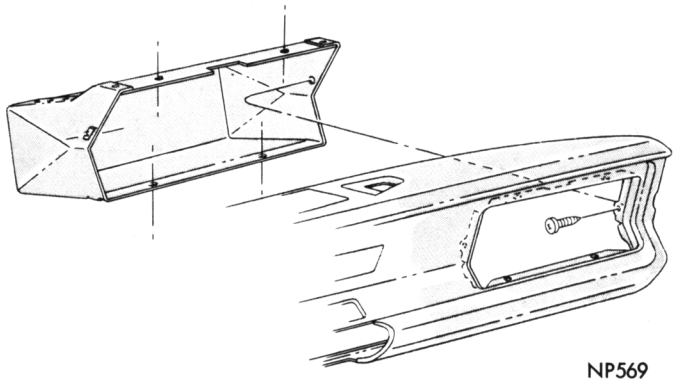

Fig. 14—Glove Box—Valiant-Barracuda

(5) Install defogger outlet and window side garnish mouldings and rear seat assembly.

SEATS

ADJUSTMENT

To raise or lower the front seat (Figs. 20, 21 and 22) loosen the adjuster mounting bolt nuts, under the floor pan, and remove or install shims between the adjuster base and floor pan.

To move seat "fore or aft" reposition the adjuster

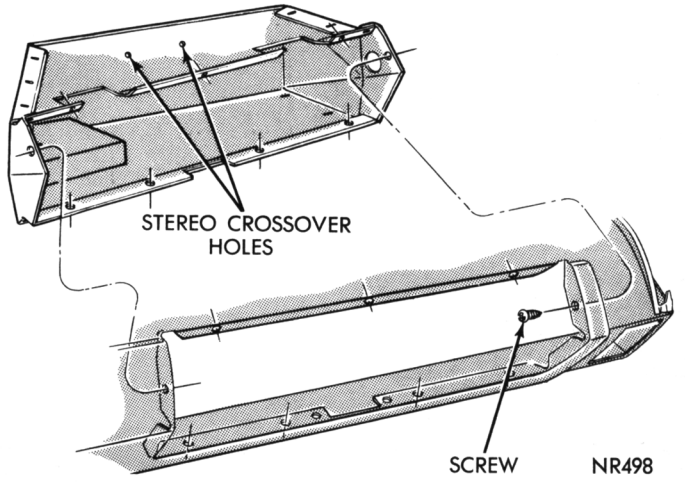

Fig. 15—Glove Box—Satellite

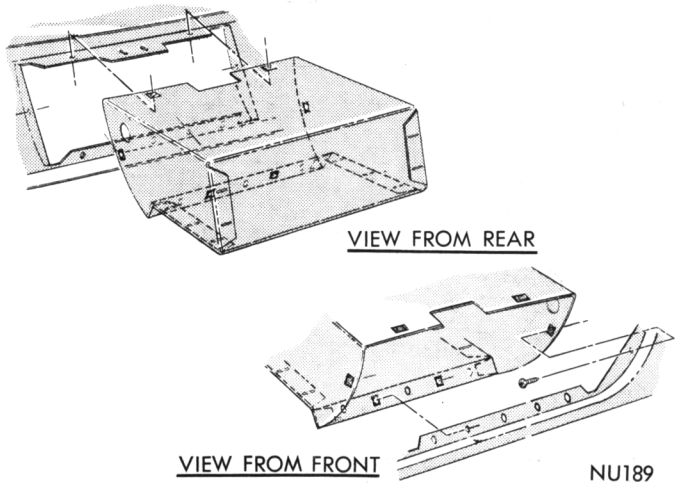

Fig. 16—Glove Box—Fury

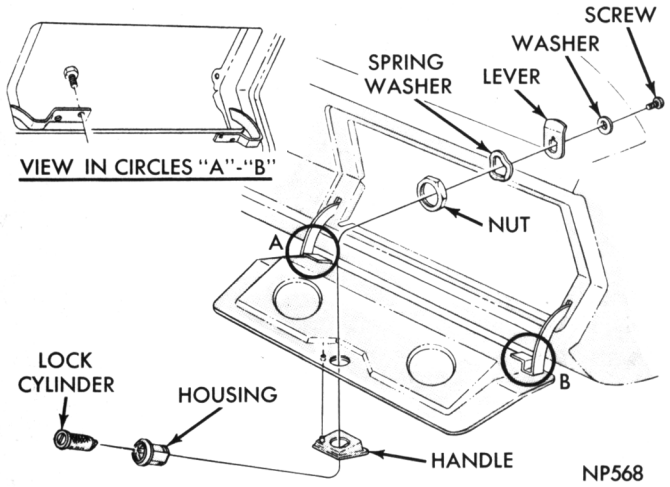

Fig. 17—Glove Box Door—Valiant-Barracuda

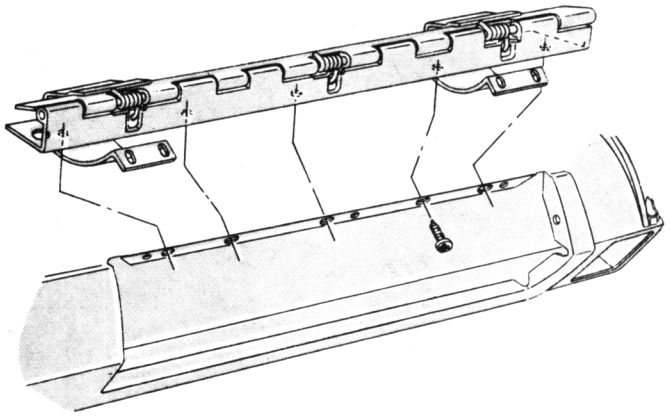

Fig. 18—Glove Box Door—Satellite

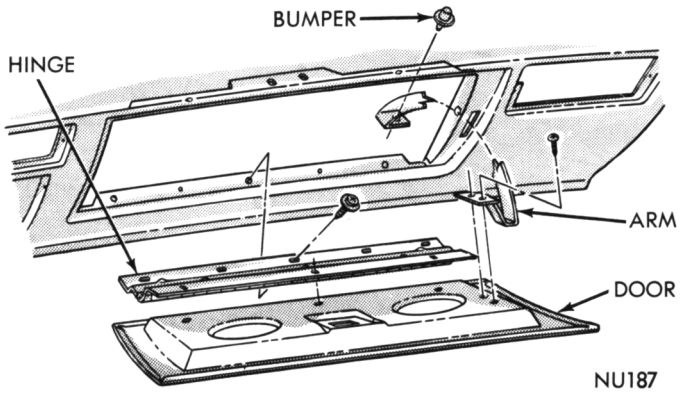

Fig. 19—Glove Box Door—Fury

mounting bolts in the adjuster base. Three holes are provided at each mounting bolt area.

FRONT SEAT BACK LATCH

All two door vehicles having split back bench type seats incorporate latches to prevent the seat back falling forward. To move seat back forward, move the latch assembly (Fig. 23) until clearance is obtained at the pivot pin.

Removal

(1) Remove snap ring and flat washer from pivot pin.

(2) Remove end of spring from latch and remove latch assembly.

(3) Remove spring from groove of pivot pin.

(4) Remove knob and clip from end of latch.

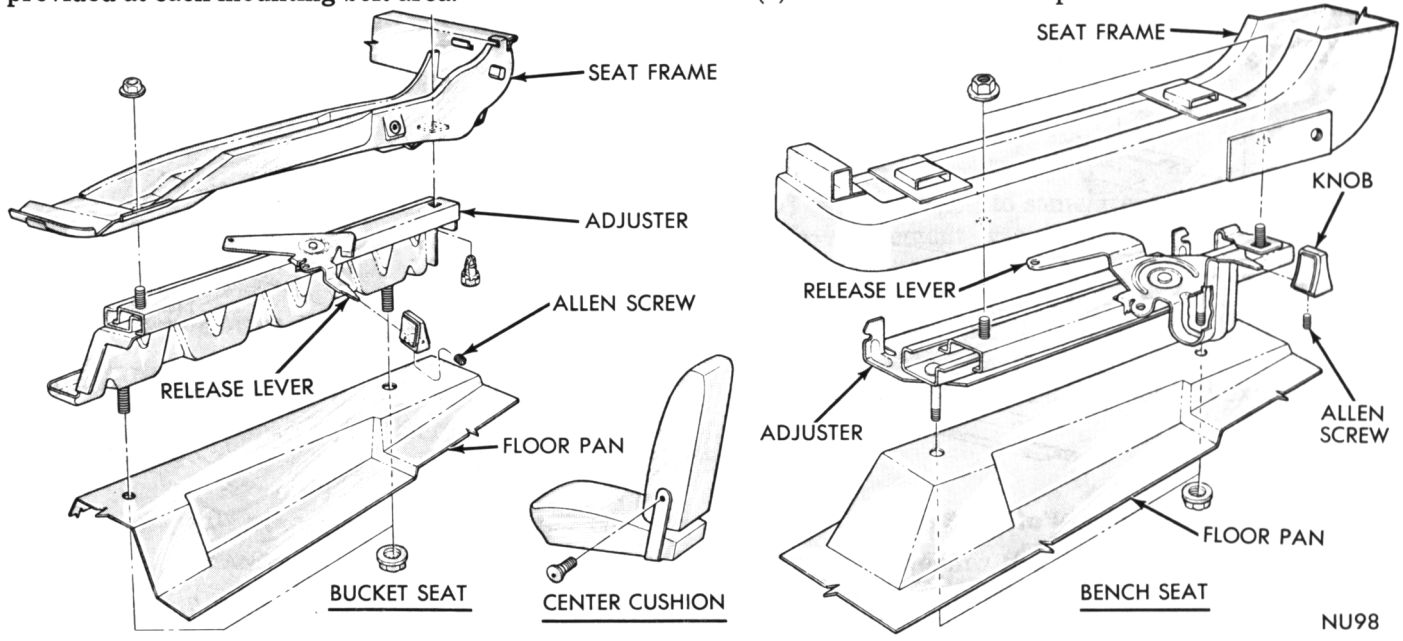

Fig. 20—Front Seat Adjuster—Valiant-Barracuda

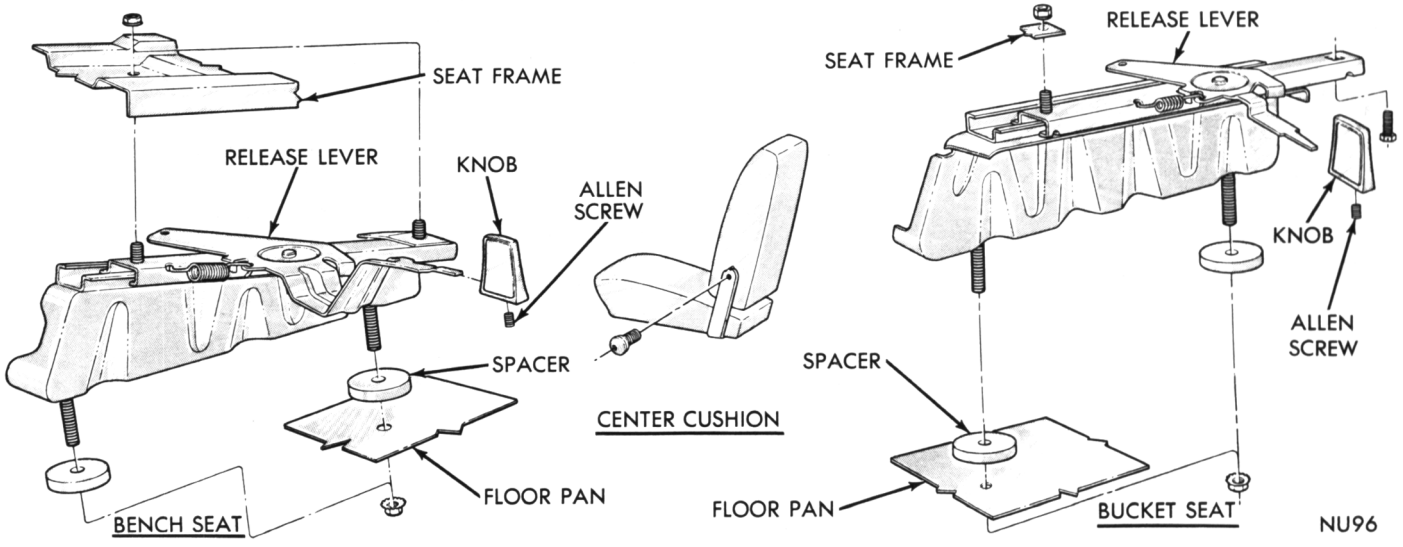

Fig. 21—Front Seat Adjuster—Satellite

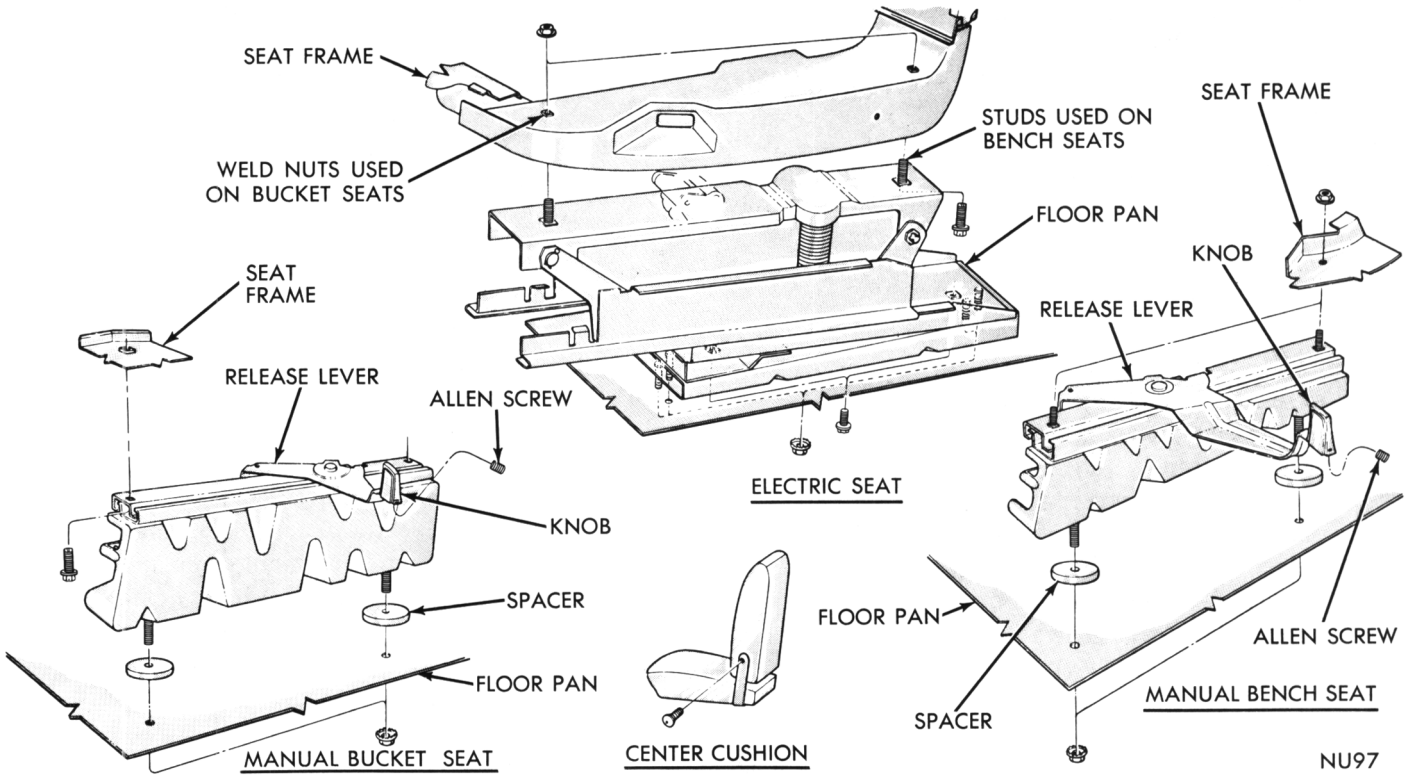

Fig. 22—Front Seat Adjuster—Fury

Installation

(1) Position spring on pivot pin and align inner end of spring in pivot groove.

(2) Install latch assembly on pivot pin and insert outer end of spring in notch on latch.

(3) Install flat washer and retainer firmly against latch assembly.

(4) Install clip and knob on latch.

RECLINING SEAT MECHANISM

For ease of assembling, the following procedures should be performed in sequence as listed.

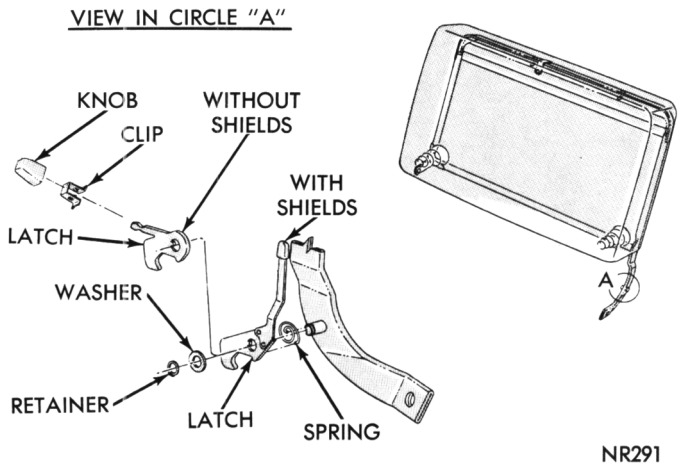

Fig. 23—Front Seat Back Latch

Bucket Type (Fig. 24)

(1) Insert adjuster assembly into rear of seat back with clevis end of adjuster over the bracket and rod end protruding through hole in bottom facing of seat back.

(2) Align holes af adjuster clevis end with holes in bracket on seat back and secure with spring pin.

(3) Push release handle shaft, from inside, through hole in seat back.

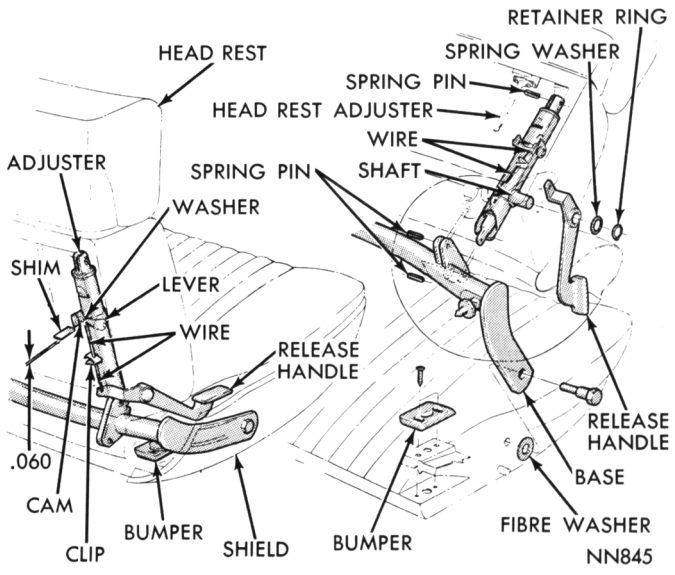

Fig. 24—Reclining Seat Mechanism—Bucket Type

(4) Hook release handle on release wire and position assembly on handle shaft.

(5) Install spring washer and retaining ring on release shaft.

(6) Position pivot brackets on seat back into stanchions on base assembly and secure with spring pins.

(7) Position rod end of adjuster in base assembly stanchion and secure in place with spring pin.

(8) Assemble seat back, cushion, back stop bumper and outer shield.

(9) With seat back in upright position, compress adjusting clip to free release spring, press release handle down as far as possible.

(10) Insert a .060 inch shim between the cam and adjuster washer and pull release lever down until cam presses shim against adjuster washer.

(11) Release adjusting clip and remove shim.

(12) Test operation of mechanism.

(13) Push seat back forward and pull seat material flap over base and attach with a hog ring to back of seat.

4 Door Models

Make certain spacer is installed on rod end of adjuster assembly (Fig. 25), otherwise seat cannot be assembled.

(1) Insert adjuster and cable assembly into rear of seat back, with clevis end on bracket and rod end protruding through hole in bottom facing of seat back.

(2) Route cable between edge of bottom facing and back spring frame of seat back. **Do not use hole for adjuster rod.**

(3) Position adjuster clevis end in bracket on seat back and secure with spring pin.

(4) Position seat back on cushion, with shoulder bolt on right side and pivot pin and push nut on left side.

(5) Position cable to rear of seat cushion.

(6) Position adjuster rod end in cushion bracket and secure with spring pin.

(7) Slide fibre washer, release handle and spring washer over release shaft and secure in place with retaining ring.

(8) Push retainer pin through hole in release handle, slide eye of adjuster cable over pin and fasten with cotter pin.

(9) Slide retaining clip over cable housing and fasten to side of seat cushion with two screws finger tight only.

(10) Insert .060 inch shim between release handle and bottom of seat cushion. Push release handle down firmly against shim and pull cable housing through retaining clip (away from handle) to remove all slack.

(11) Tighten screw to lock sheath in retaining clip and remove shim.

(12) Raise seat back to upright position and remove spacer from rod end of adjuster.

(13) Test operation of mechanism.

REPLACEMENT

Front Seat

The front seat cushion is an integral part of the seat frame. All seat frames are attached to the adjusters by studs and nuts. Remove nuts from adjuster mounting bolts, under floor pan (Figs. 20, 21 and 22) and remove seat.

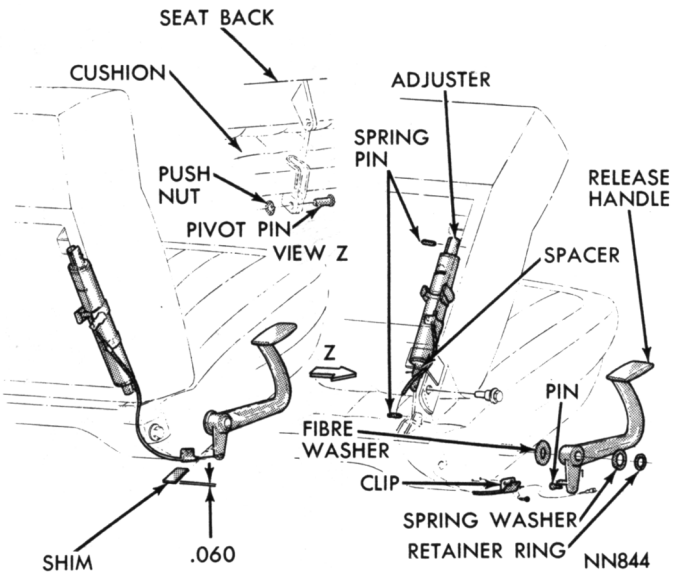

Fig. 25—Reclining Seat Mechanism—4 Door Models

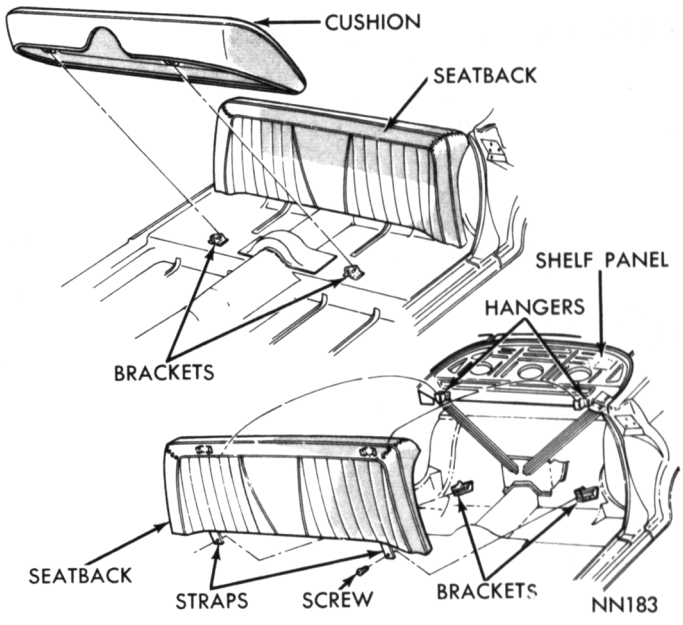

Fig. 26—Rear Seat Cushion and Back

Rear Seat Cushion

The rear seat cushion is held in place (Fig. 26) by inserting the rear edge of the cushion under the seat back. The front lower frame of the seat incorporates retainers which fit into slotted brackets welded to the floor pan.

Rear Seat Back

The rear seat back (Fig. 26) is held in place by tangs on the upper edge of the seat frame being positioned over hangers on the shelf panel. The lower edge of the seat back incorporates two metal straps which are attached to mounting brackets welded to the rear floor pan.

Station Wagon—Second Seat Back

Removal

(1) Remove screws attaching seat back to hinge assemblies (Fig. 27).

(2) Release catches from seat back and remove assembly.

Installation

(1) Position seat back on hinge assemblies.

(2) Install hinge to seat back screws.

(3) Test engagement of seat back catches and adjust as necessary.

Second Seat Cushion

Removal

(1) Raise rear floor hinged panel at rear of seat cushion assembly (Fig. 28) to expose seat cushion to floor pan attaching screws.

(2) Remove screws attaching cushion to floor pan.

(3) Move cushion slightly rearward to disengage locking bars at front bottom side of cushion and remove cushion.

Installation

(1) Place cushion in position, making certain locking bars at bottom are engaged in brackets on floor pan.

(2) Raise hinged portion of floor, at rear of seat cushion, and install screws attaching cushion mounting straps to floor pan.

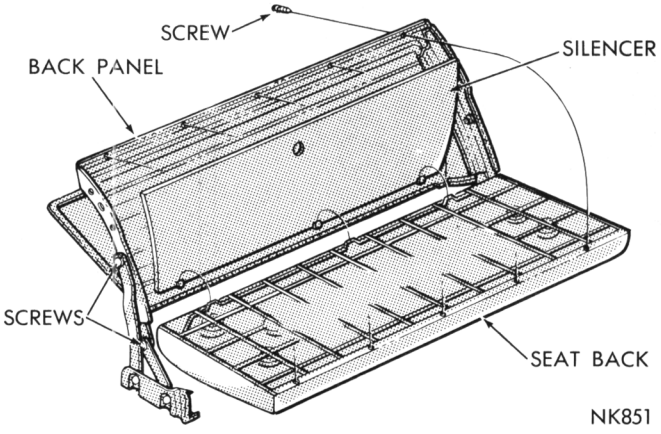

Fig. 27—Second Seat Back

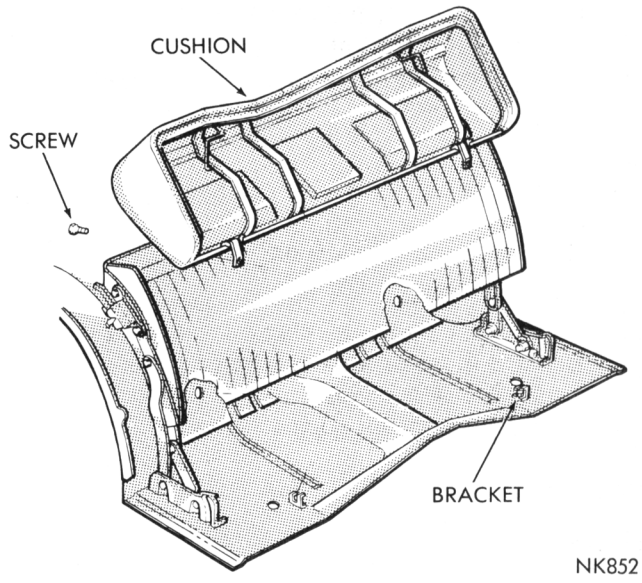

Fig. 28—Second Seat Cushion

Third Seat Back

Removal

(1) With third seat back in the UP position (Fig. 29) remove the seat hinge links screws.

(2) Remove seat back and support panel assembly.

(3) The seat back cushion is retained with screws to the seat back panel.

Installation

(1) Position back cushion on back panel and install retainer screws.

(2) Position seat back and support panel assembly on hinge links and install retaining screws.

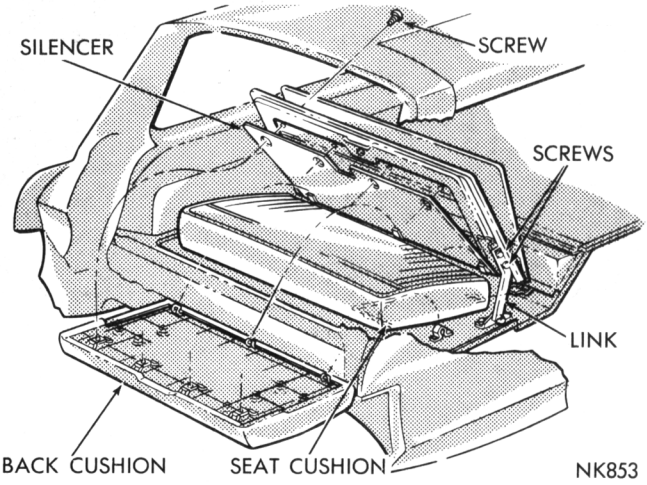

Fig. 29—Third Seat Back and Cushion

Cushion

The third seat cushion (Fig. 29) is attached to hinges which in turn are attached to the quarter inner panels by screws.

Removal

(1) Remove screws attaching hinges to quarter inner panel.

(2) Remove rear seat cushion assembly.

Installation

(1) Position cushion assembly on rear floor pan.

(2) Install hinges on quarter inner panel and tighten securely.

(3) Test seat operation, inspect fit and alignment.

REAR SEAT BACK (BARRACUDA)

Hinge

The rear seat back hinge assembly (Fig. 30) is attached to the seat back frame and over end of the release rod. The cam bearing is positioned on release rod and into lower hole in hinge assembly. The cam is pressed into the release bearing and secured with a screw.

Lock Mechanism (Fig. 30)

Disassembly

(1) Remove release handle cover and screws.

(2) Remove handle bumper and knob.

(3) Rotate release handle in clockwise direction and disengage handle release spring.

(4) Remove handle link clips and link.

(5) Remove set screw securing release rod assembly to the release mechanism.

(6) Remove release rod, lever and bearing.

(7) Remove nut attaching handle to back panel and remove handle assembly.

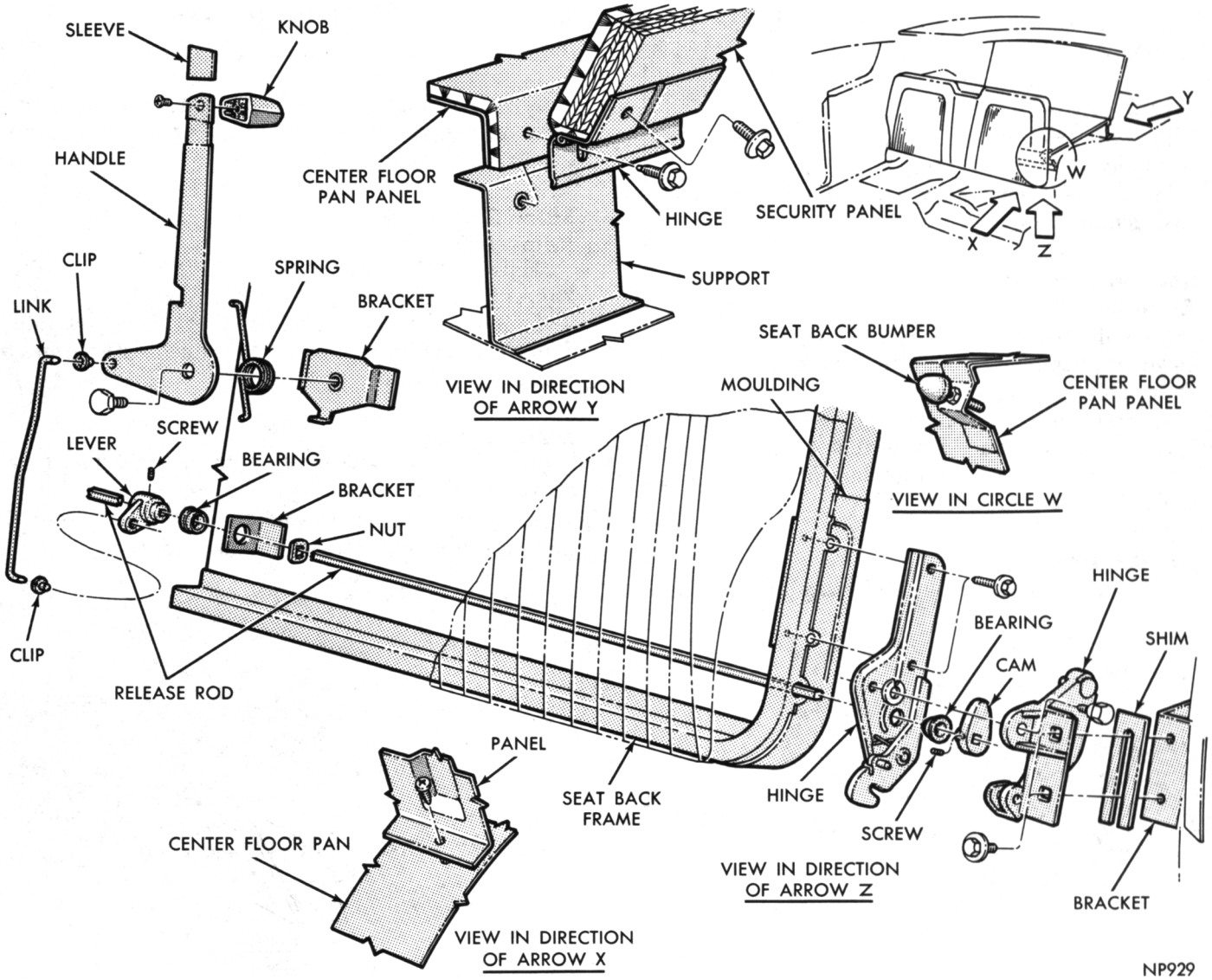

Fig. 30—Rear Seat Back Hinge—Barracuda

(8) Remove sleeve, spring and bolt from handle.

Assembly

(1) Lubricate areas contacted by mechanism.

(2) Assemble handle loosely with bolt and spring to bracket on back panel.

(3) Assemble sleeve to handle and tighten handle nut.

(4) Partially assemble release rod to panel through hole in seat frame right side against stop with lever and bearing.

(5) Complete rod installation through hole in bracket and insert spring nut onto rod.

(6) Push rod through hole in seat frame left side against stop.

(7) Nest bearing into bracket and lever into bearing.

(8) Secure with set screw.

(9) Assemble clips to release handle and lever.

(10) Assemble link to clips after rotating release handle clockwise to engage spring.

(11) Assemble knob to handle and install screw.

(12) Install handle bumper on bracket and cover on back panel with screws.

Cover Material Installation

Prior to installing the original or new cover, make certain the spring pad (where used) and pad cover are centered on the spring and are firmly attached. **Make certain all buttons and medallions (where used) are pulled down securely and locked in position.**

As an aid in attaching the cover correctly, mark the areas on the spring where the original cover was attached with hog rings, screws or drive nails.

SAFETY BELTS

Refer to Figures 31 through 44 for methods and areas of attaching the safety belts.

POWER SEATS

Refer to the Electrical Group for tests, wiring diagrams and complete servicing procedures.

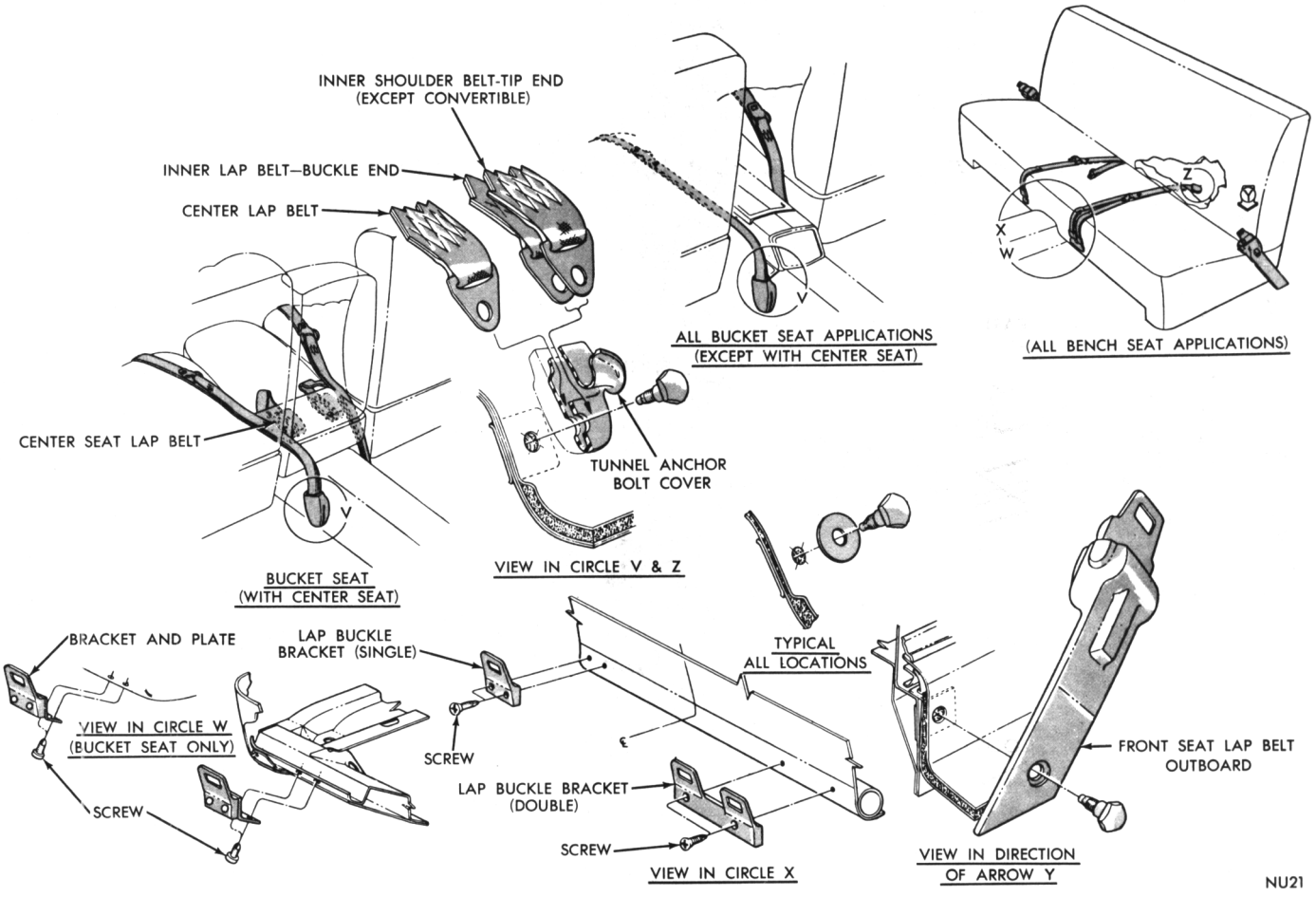

Fig. 31—Front Seat Lap Belts—Valiant-Barracuda-Satellite

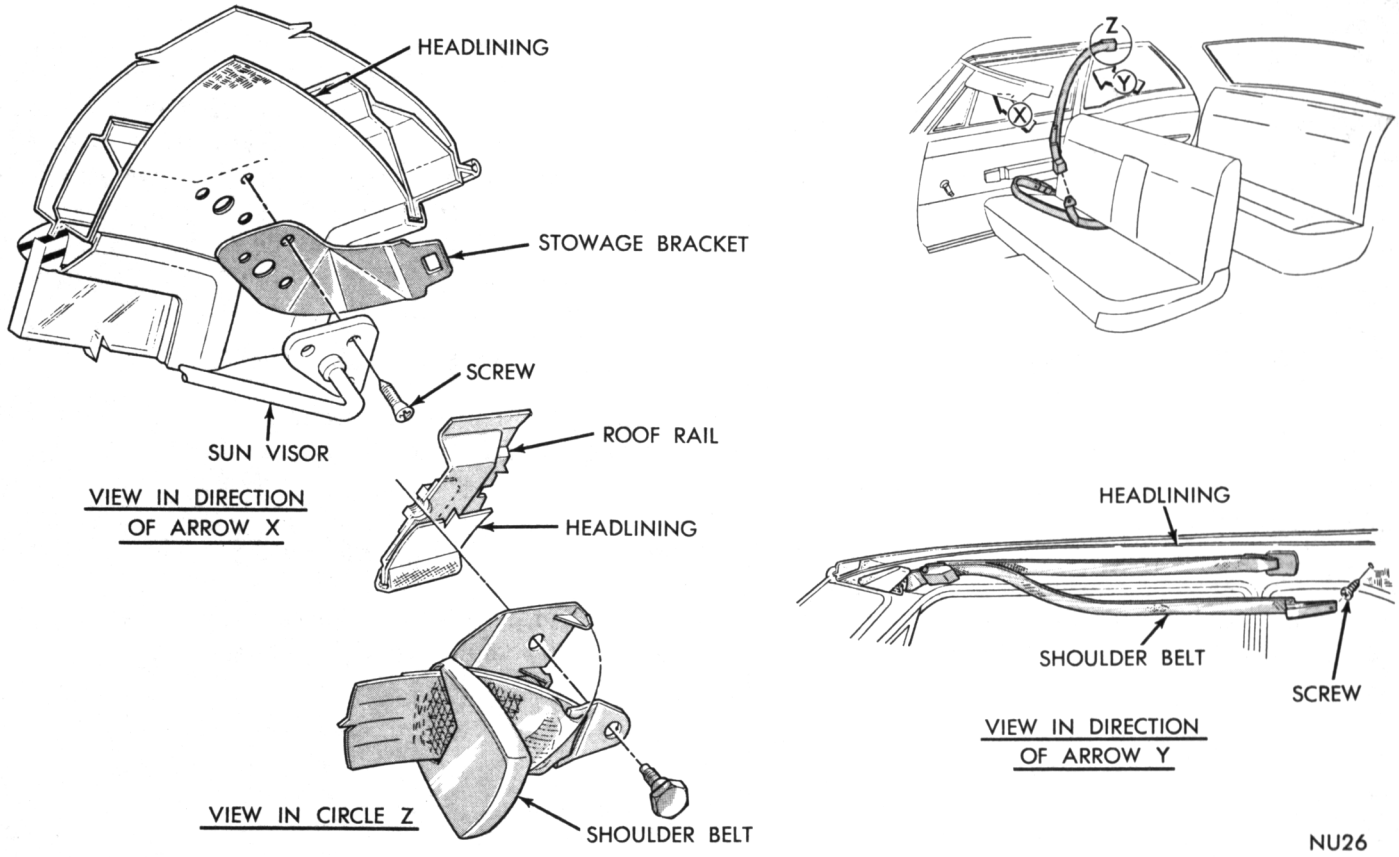

Fig. 32—Front Seat Shoulder Belts (Except Convertible)—Satellite

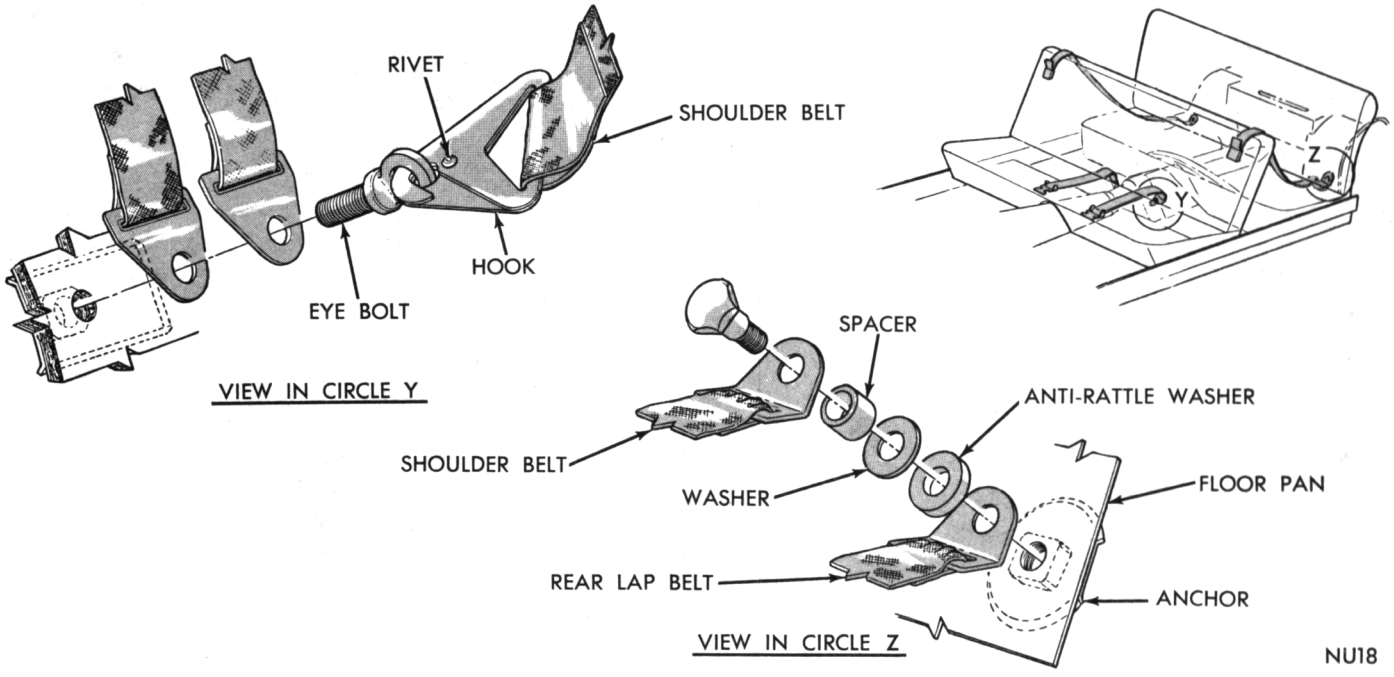

Fig. 33—Front Seat Shoulder Belts (Convertible)—Satellite

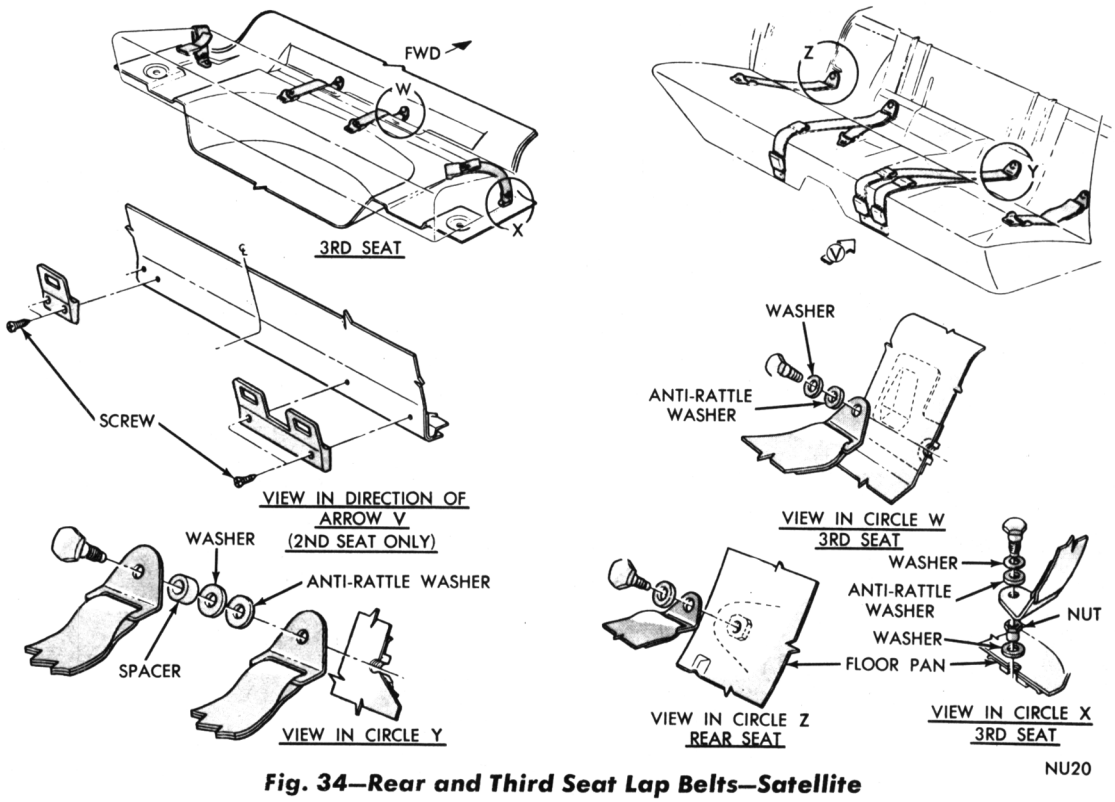

Fig. 34—Rear and Third Seat Lap Belts—Satellite

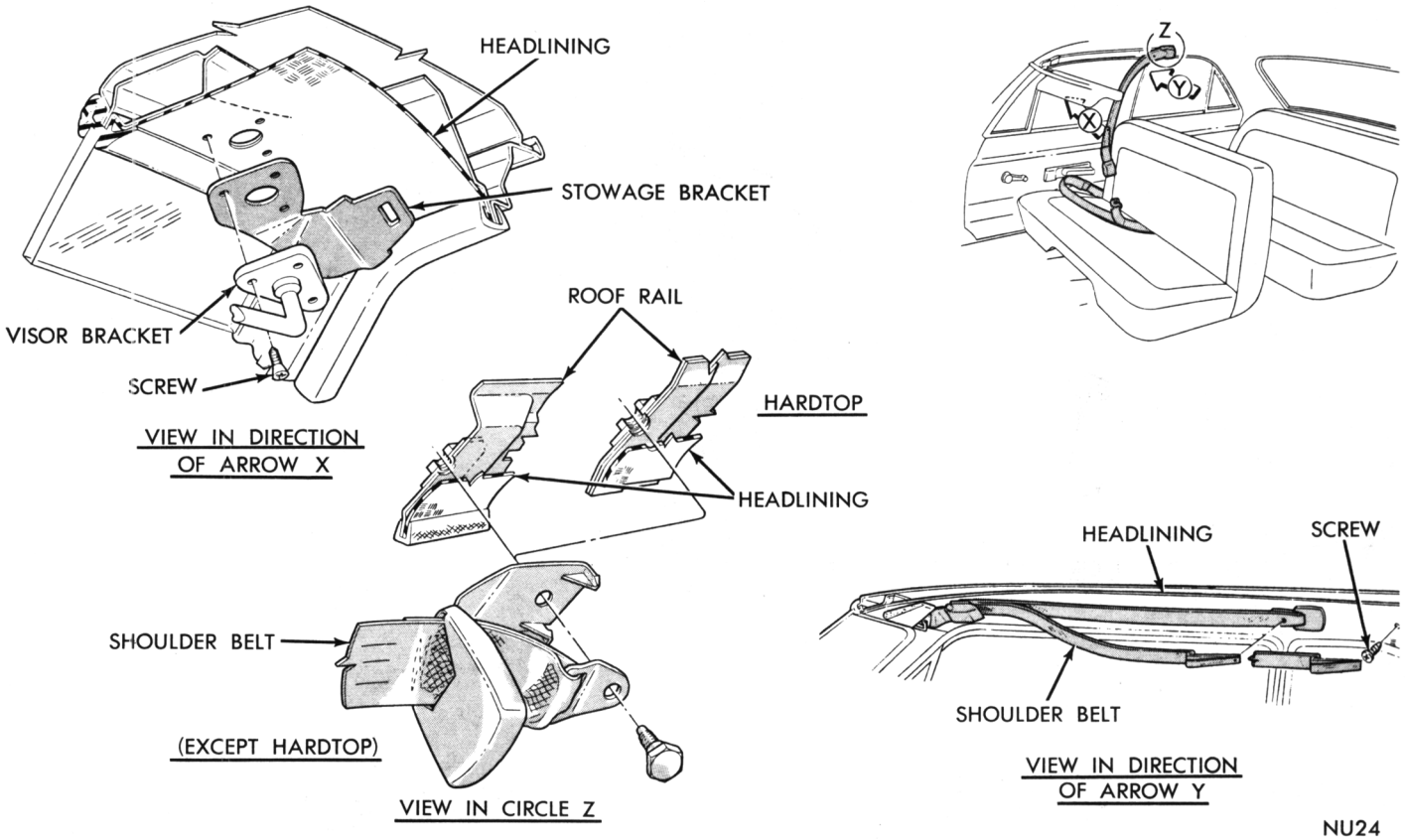

Fig. 35—Front Seat Shoulder Belts (Except Convertible)—Valiant-Barracuda

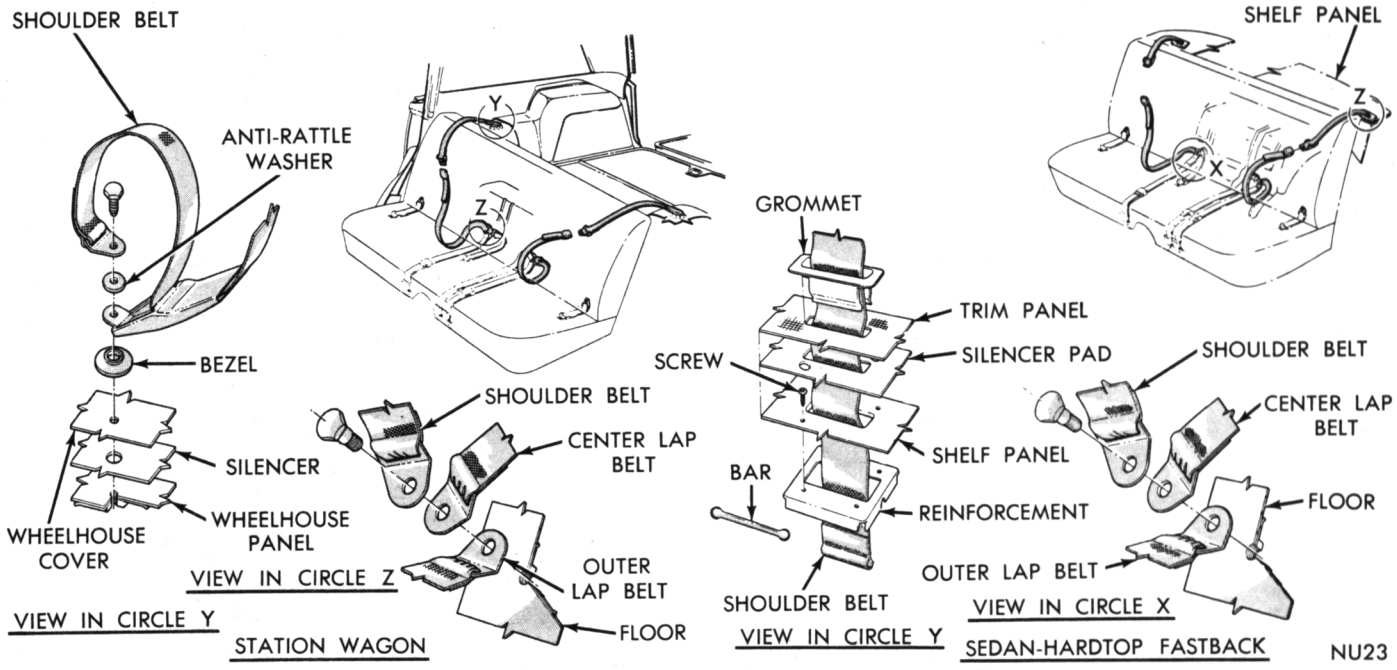

Fig. 36—Rear Seat Shoulder Belts—Satellite

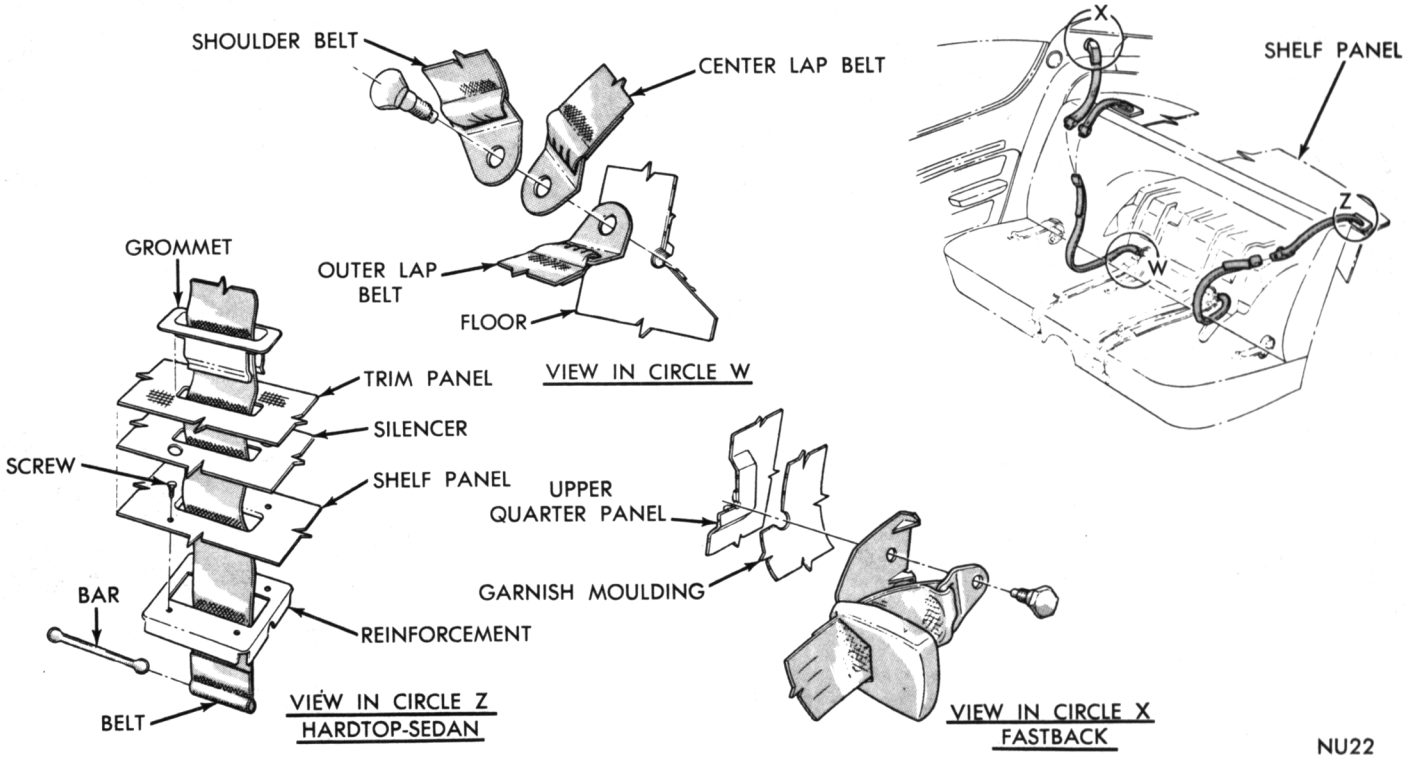

Fig. 37—Rear Seat Shoulder Belts—Valiant-Barracuda

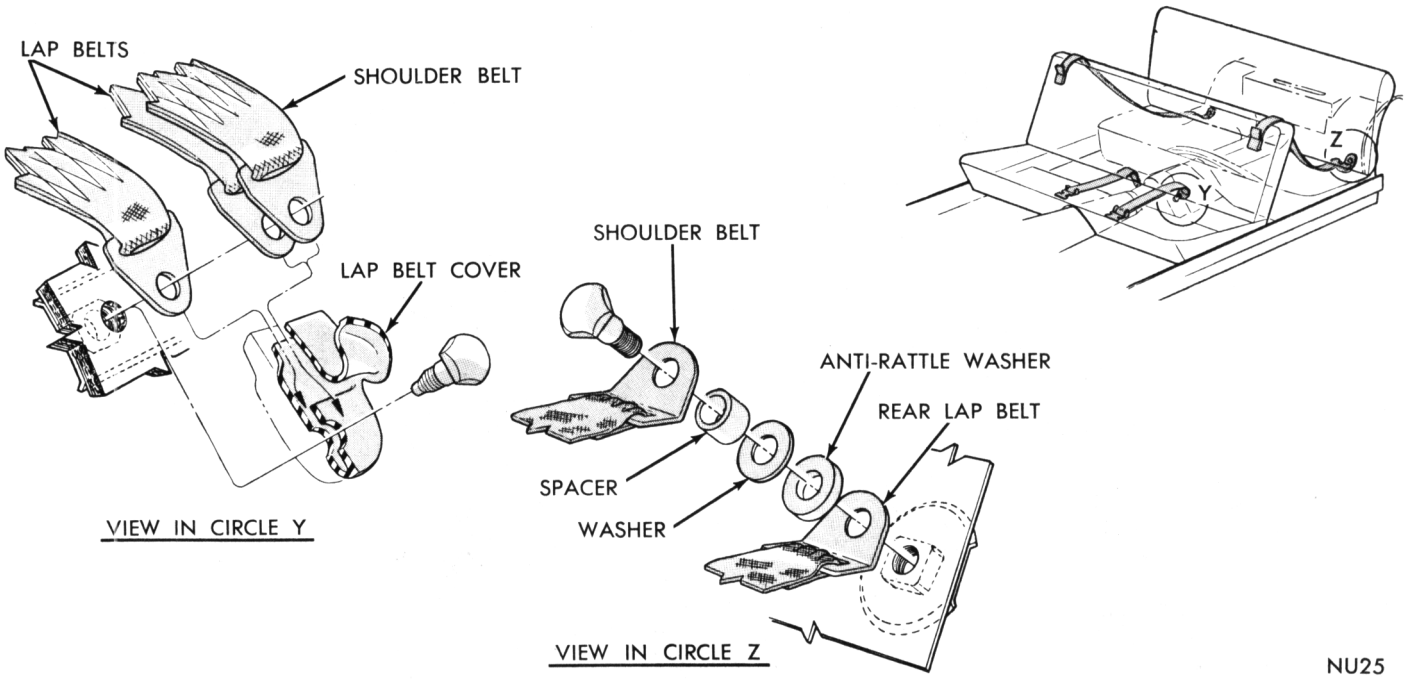

Fig. 38—Front Seat Shoulder Belts (Convertible)—Barracuda

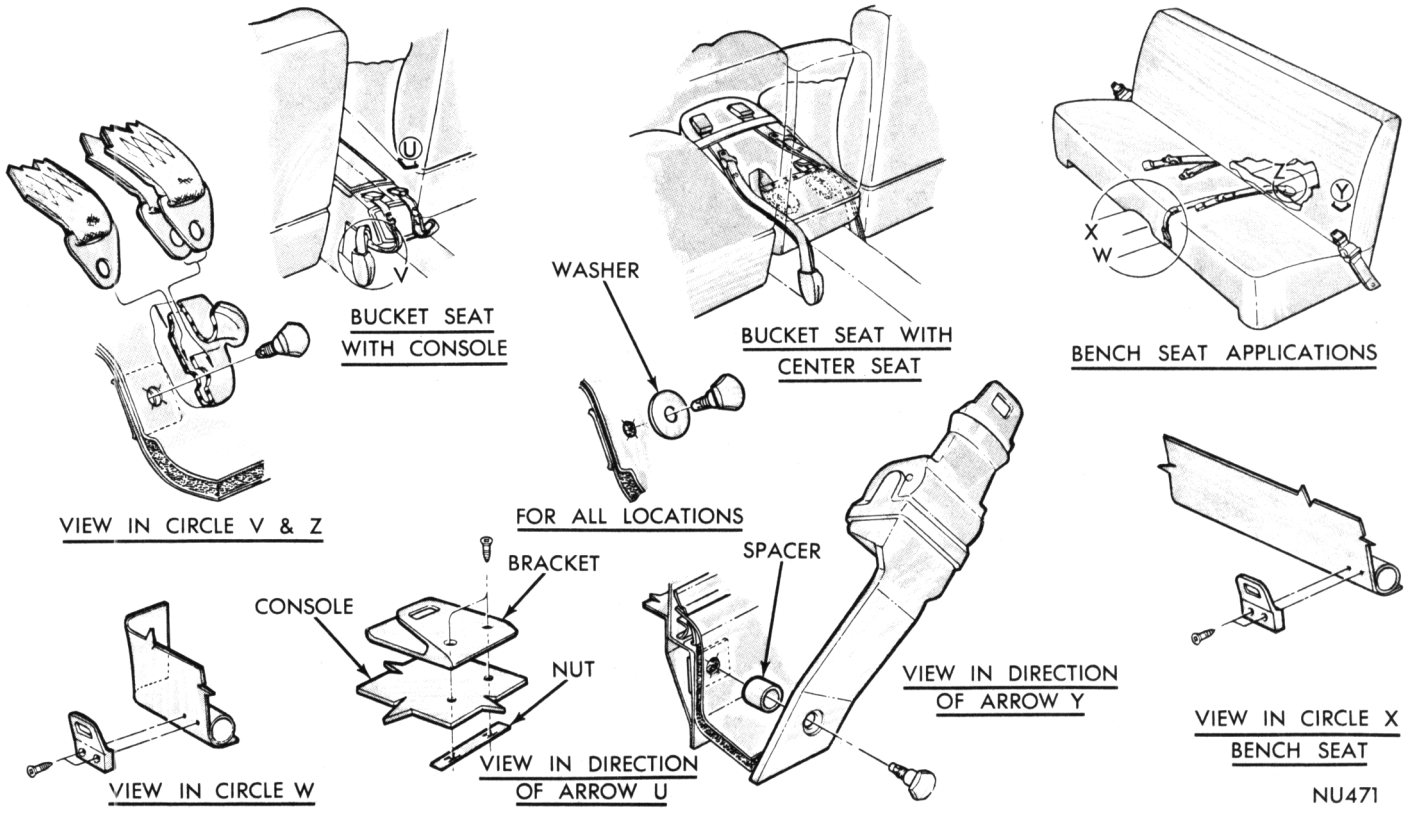

Fig. 39—Front Seat Lap Belts—Fury

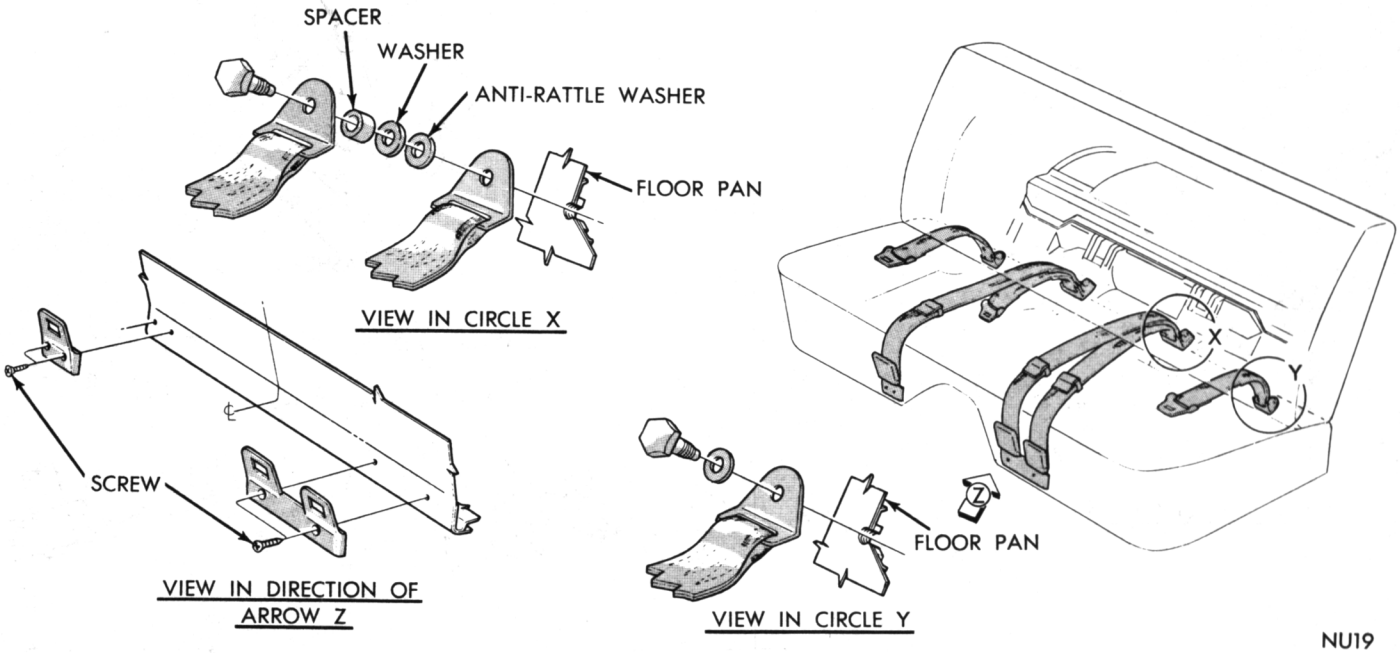

Fig. 40—Rear Seat Lap Belts—Valiant-Barracuda

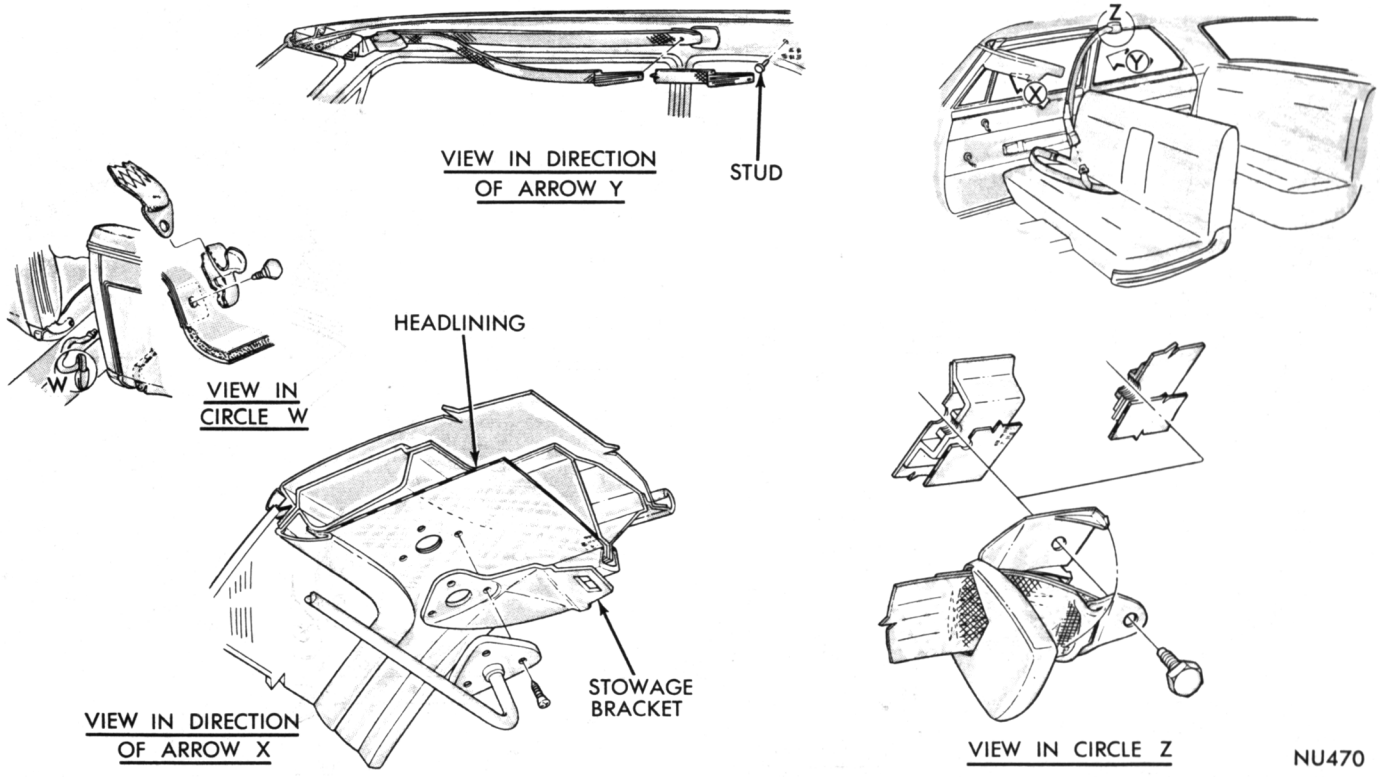

Fig. 41—Front Seat Shoulder Belts (Except Convertible)—Fury

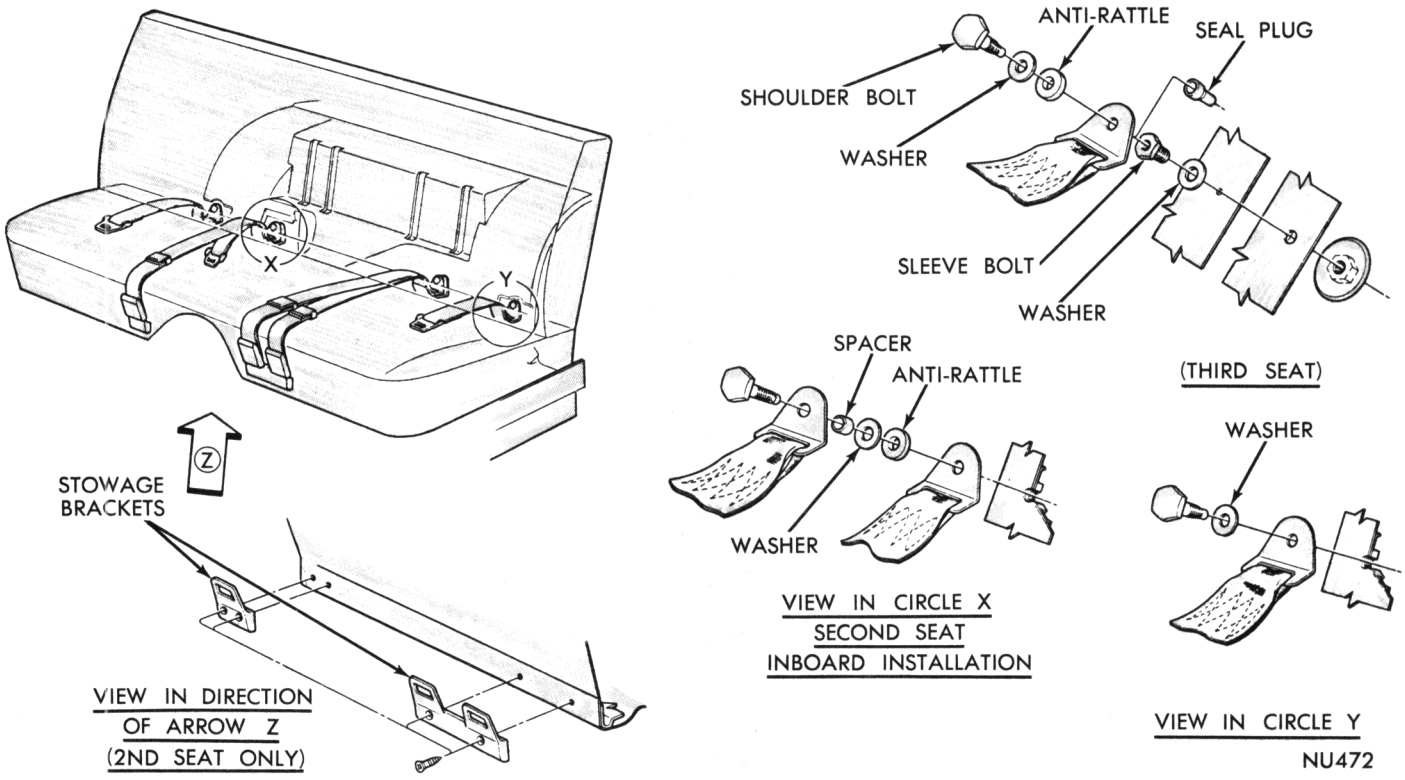

Fig. 42—Rear and 3rd Seat Lap Belts—Fury

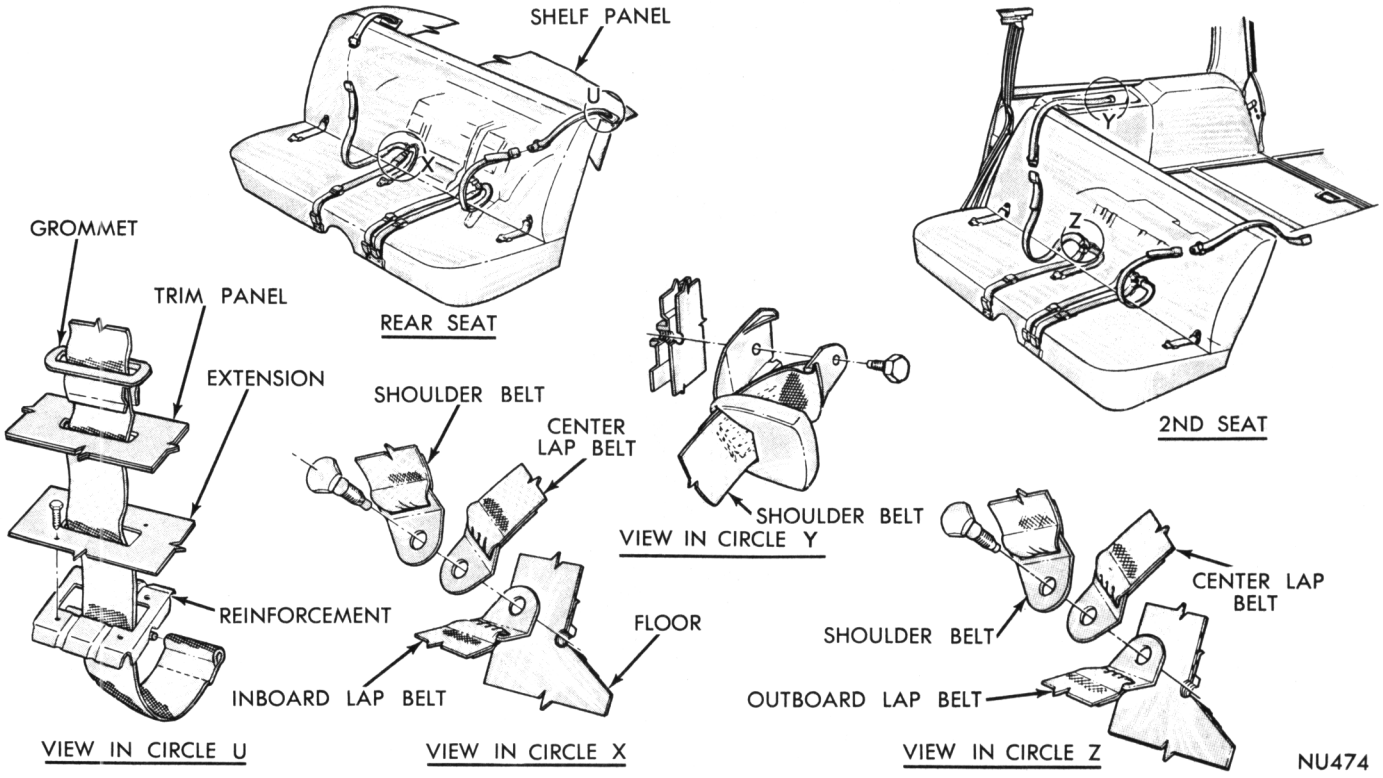

Fig. 43—Rear and 2nd Seat Shoulder Belts—Fury

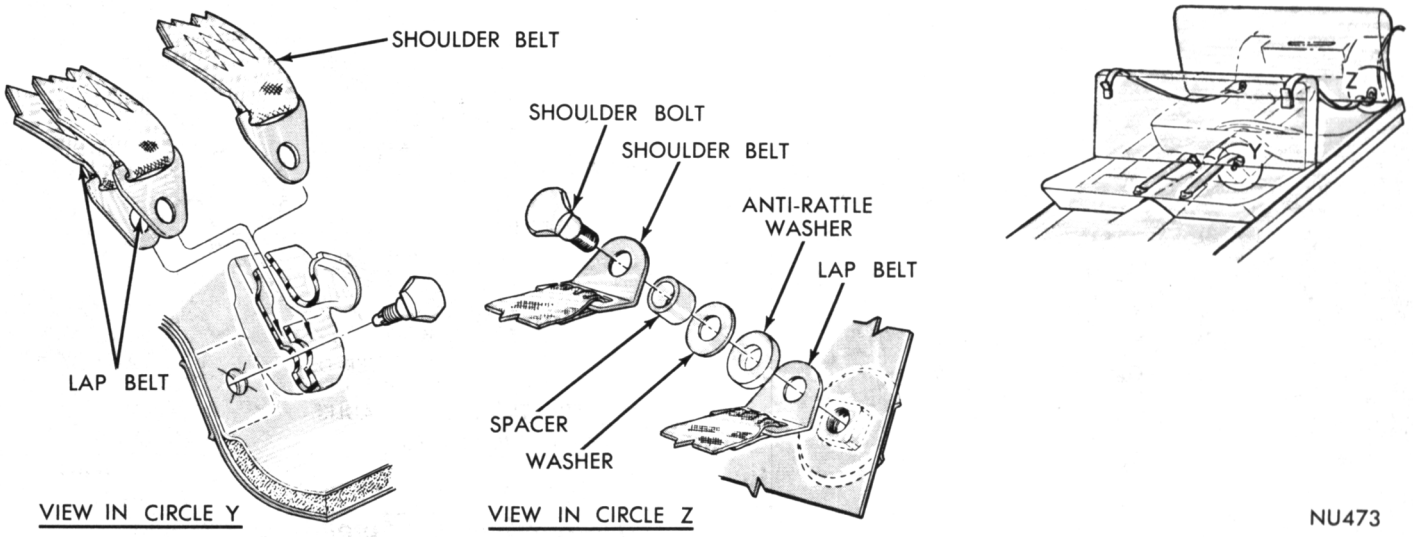

Fig. 44—Front Seat Shoulder Belts (Convertible) Fury

WINDSHIELD AND REAR WINDOW

INDEX

	Page
REAR WINDOW	
Polysulfide Adhesive Sealed Type	122
Weatherstrip Type	122
WINDSHIELD	
Convertible	118
Fury	120
Satellite	121
Valiant	120

SERVICE PROCEDURES

WINDSHIELD AND REAR WINDOW

FURY MODELS

The windshield and rear window are polysulfide adhesive sealed (cemented-in) types. Service procedures for the two glass are comparable.

Short cut sealing methods should not be used. To ensure a permanent watertight glass installation, use only the recommended adhesive sealer kit or its equivalent.

REPLACEMENT

Removal

(1) Place protective coverings over the areas adjacent to the glass being replaced.

(2) Remove window exterior mouldings using Tool C-4009 and inner garnish mouldings.

(3) Secure one end of a two foot length of tempered steel wire (.028 gauge max.) to a wooden handle.

(4) Insert other end of wire through adhesive at lower corner of window and secure to another wooden handle.

(5) With an assistant, carefully cut through adhesive material by pulling wire, in a sawing motion, up one side, across top, down opposite side and across bottom (Fig. 1).

(6) With an assistant, remove glass from opening and if original glass is to be reinstalled, place on a protected surface.

(7) All old adhesive should be removed from glass and opening reveal using a putty knife or razor blade. **DO NOT use an oil base solvent to remove adhesive.**

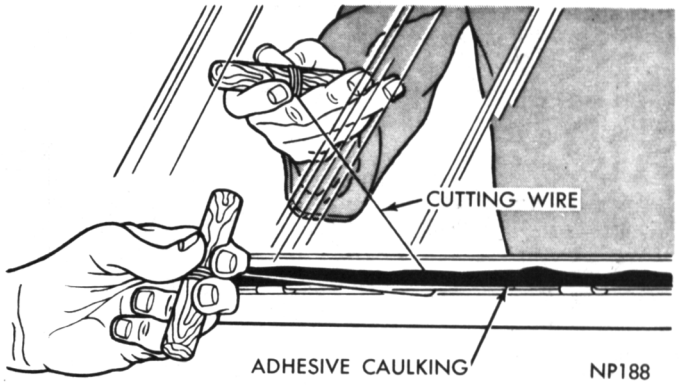

Fig. 1—Cutting Adhesive Caulking

(8) Using steel wool, remove loose flakes of adhesive and old primer from reveal. Use light air pressure to clean reveal and surrounding areas.

Installation

(1) Inspect moulding retaining clips. Remove and straighten clips bent more than 1/32 inch away from the body panel. Use block self-sealing screw-on type clips when necessary to replace. All clips must be attached lightly.

(2) Inspect rubber spacers in window reveals when replacement of spacers is required, make certain they are positioned in the exact areas removed from.

(3) Clean interior surface of glass. **Hand pressure to clean the glass interior surface after installing glass and before adhesive has set up may result in glass being pushed out of opening.**

(4) Install spacer dam 1/4 inch from edge and positioned so it leans toward edge on glass inner surface (Fig. 2).

(5) Attach suction cups to glass outer surface and position glass in opening.

(6) Inspect relationship of glass to fence completely around opening. The spacer dam should fold under and create a cushion for the glass to rest on. The glass to body fence overlap (0.30 inch minimum) should be equal across the top and sides. Use waterproof shims under spacers to obtain required overlap.

(7) Apply a piece of masking tape over each side of glass and roof extensions. Slit tape vertically at edge of glass so when glass is installed, tape on glass can be aligned with tape on body.

(8) Remove glass from opening and place on a protected surface, with inside surface up.

(9) **Primer solution will damage any paint or trim it comes in contact with.** Using a cheesecloth pad saturated with adhesive primer, thoroughly apply to rear window fence and reveal areas.

(10) **The adhesive begins to cure immediately upon exposure to air. The working life is limited to approximately 15 minutes. Perform the following steps as quickly as possible.**

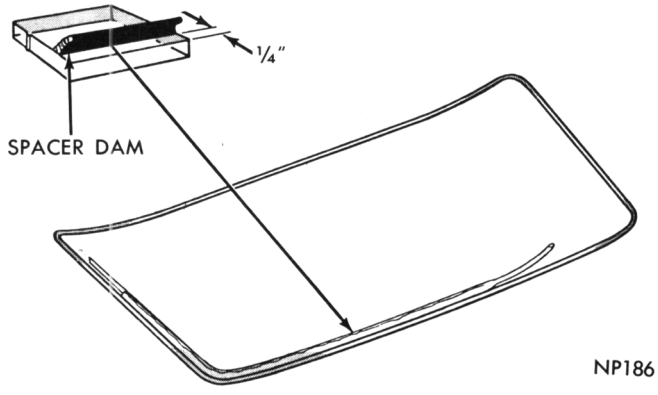

Fig. 2—Spacer Dam Installation

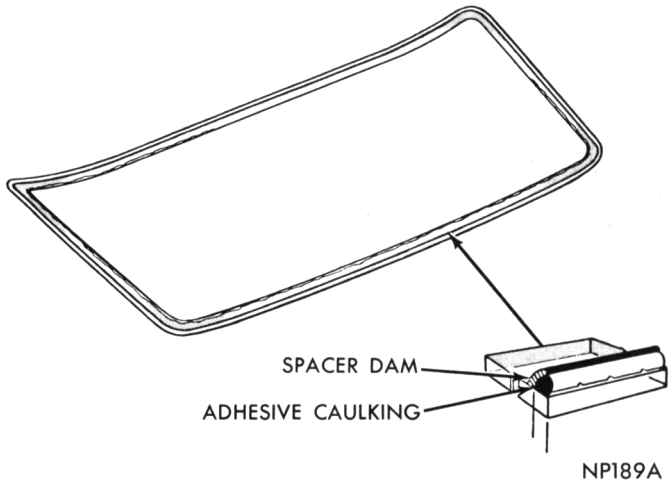

Fig. 3—Adhesive Application to Glass

(11) Insert adhesive tube into a standard household caulking gun, install nozzle on end of tube, and puncture adhesive seal at nozzle.

(12) Apply a smooth continuous 3/8 inch bead of adhesive on glass between glass edge and spacer dam (Fig. 3).

(13) When positioning glass in opening, alignment must be exact to prevent necessity of moving glass after adhesive contacts fence.

(14) With an assistant and using suction cups on glass, **align tape on glass with tape on body, make certain glass will set on rubber spacers and install glass in opening (Fig. 4).**

(15) Press glass **lightly** to adhere adhesive to fence flange.

(16) Run a flat wooden or fiber tool around entire edge of glass to force adhesive into opening between edge of glass and reveal.

(17) **Close car doors gently, do not slam** and water test window. Use a cold water spray, **do not run a heavy stream of water directly on freshly applied adhesive.** If leaks are evident, work applied adhesive

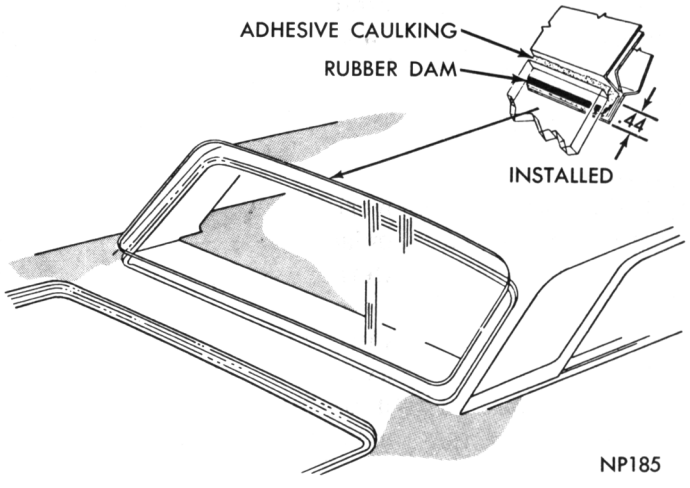

Fig. 4—Window Installation

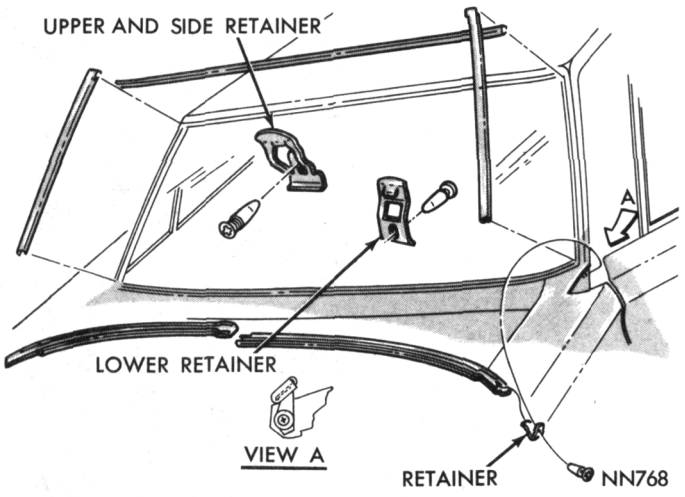

Fig. 5—Windshield Outer Moulding—Satellite

into leak point. Additional material can be applied and worked into leak point.

(18) Install garnish and exterior mouldings, clean glass exterior surface and remove protective covers.

(19) **Leave a window open and do not slam any doors for at least one hour. Sufficient pressure could build up in a closed car to force the rear window out of the opening.**

WINDSHIELD

REPLACEMENT

Valiant—Barracuda—Satellite

Removal

(1) Cover cowl, hood and fender area with a protective covering.

(2) Remove windshield garnish mouldings.

(3) Remove windshield outer mouldings (Figs. 5 and 6) using Tool C-4009.

(4) Unlock weatherstrip (Figs. 7 and 8) by prying lip of weatherstrip apart, inserting a fibre wedge, and

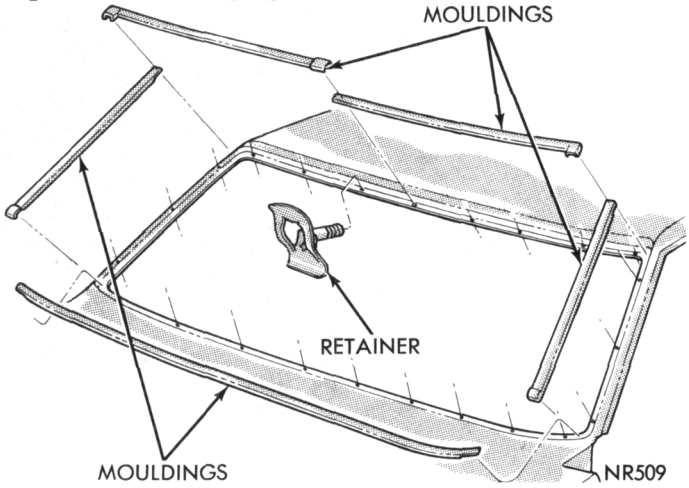

Fig. 6—Windshield Outer Moulding—Valiant-Barracuda

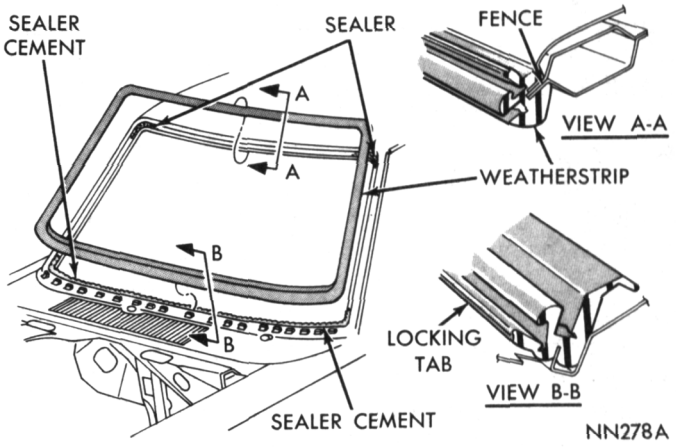

Fig. 7—Windshield Weatherstrip—Satellite

with a slight twist to wedge, unlock weatherstrip by moving tool around weatherstrip.

(5) Carefully loosen weatherstrip from glass inner and outer sides.

(6) With an assistant supporting one end of windshield, exert pressure, from inside car, to force windshield out of weatherstrip and carefully remove from opening.

(7) Whenever a glass has cracked from pressure at the fence area, remove weatherstrip and correct cause of crack. The fence should be straight, smooth, without burrs or high spots

(8) Inspect weatherstrip for damage.

(9) **On Valiant-Barracuda Models** inspect weatherstrip lower filler strip.

Installation

(1) Remove all old sealer and cement from original weatherstrip.

(2) Apply sealer in fence and glass groove portions of weatherstrip. **On Valiant-Barracuda Models** install

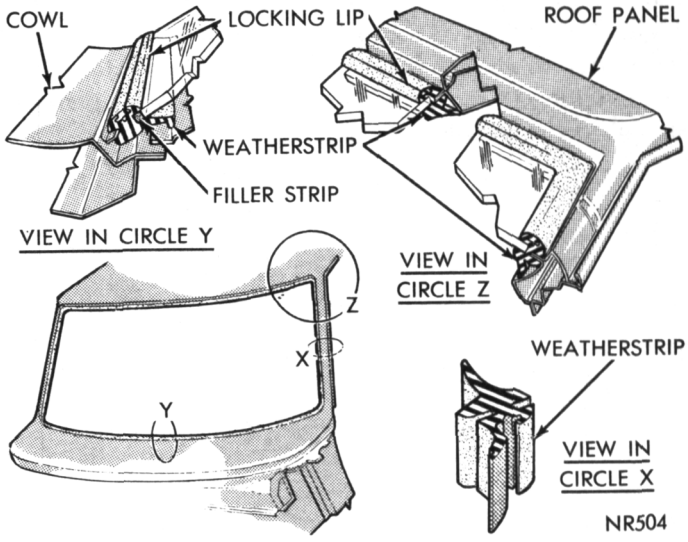

Fig. 8—Windshield Weatherstrip—Valiant-Barracuda

filler strip in lower part of weatherstrip.

(3) Apply a 3/8 inch bead of sealer cement completely across cowl top panel lower windshield frame area (Fig. 9).

(4) Position weatherstrip lower section to tab area, starting at corners install over tabs and work toward center.

(5) Install weatherstrip on fence at sides and upper opening. With hand pressure, seat weatherstrip fully on fence.

(6) With an assistant, slide upper edge of glass into channel of weatherstrip. Use a fibre tool to force weatherstrip lip over glass.

(7) Seat glass in weatherstrip, pounding glass, with palm of hand using an upward motion.

(8) Insert a fibre tool between weatherstrip and glass, at either corner, slide tool across top, and completely around weatherstrip to seat glass in place.

(9) Using a fibre tool and working across top, down sides and over bottom, force weatherstrip locking tab into locked position.

(10) Water test windshield area.

(11) Install exterior mouldings, wiper arms and blades.

(12) Install garnish mouldings, wiper arms and remove protective covering.

Convertible Models

Removal

(1) Cover cowl, hood and fender area with a protective covering.

(2) Release top locking mechanisms and push header from windshield frame to expose moulding retainer screws.

(3) Remove wiper arms and blades.

(4) Remove windshield outside mouldings (Fig. 10).

(5) Remove inner "A" post side mouldings.

(6) Remove sun visors and screws attaching header trim cap to header.

(7) Pry header moulding up slightly to clear moulding from weatherstrip, disengage from header and remove.

(8) Remove windshield in same method as other models.

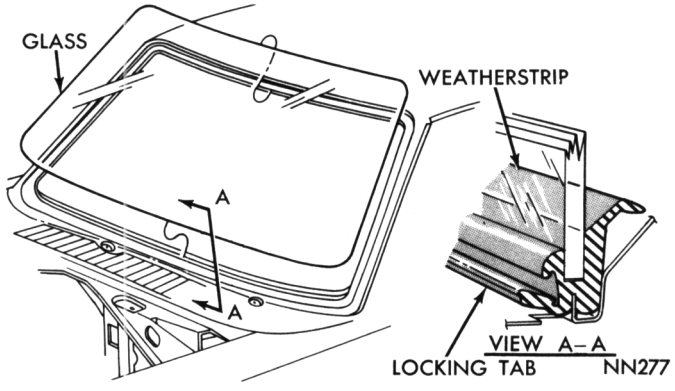

Fig. 9—Windshield Installation

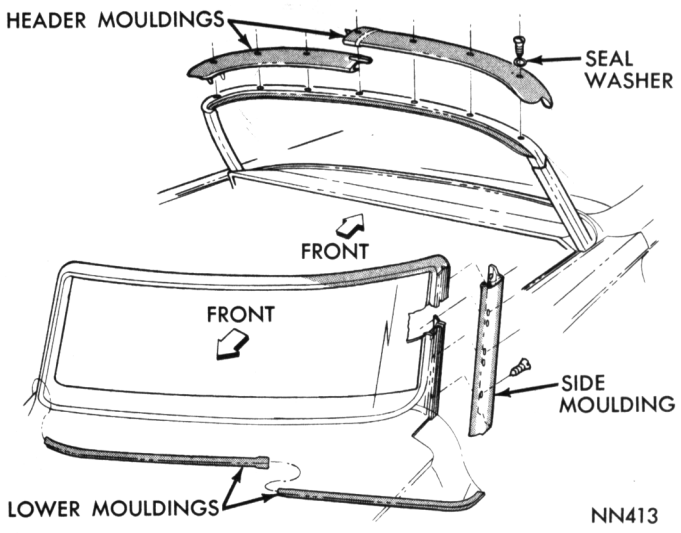

Fig. 10—Windshield Mouldings—Convertible

Installation

Install windshield (Fig. 11) in same manner as described for other models, then continue as follows:

(1) Position header cap moulding up against weatherstrip, force moulding against weatherstrip, and press rear edge down over header.

(2) Install screws loosely to hold in position and lightly tap with a rubber hammer to seat. Be sure cap is evenly spaced across header.

(3) Tighten screws securely.

(4) Water test windshield area.

(5) Install windshield outside mouldings and "A" post moulding.

(6) Install sun visor, wiper arms and clean windshield.

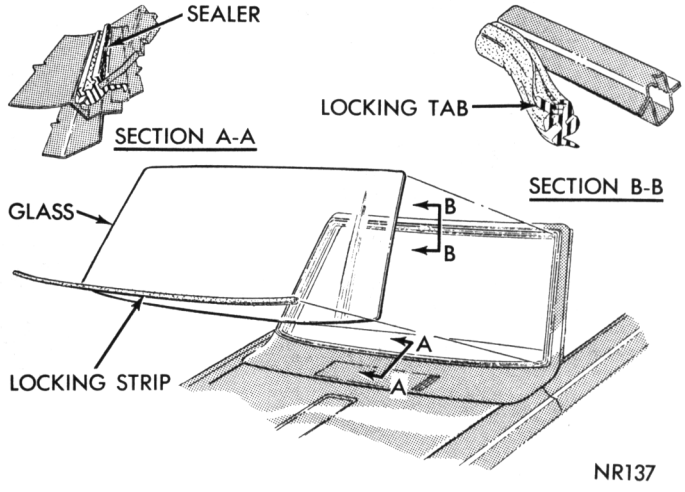

Fig. 11—Windshield Installation—Convertible

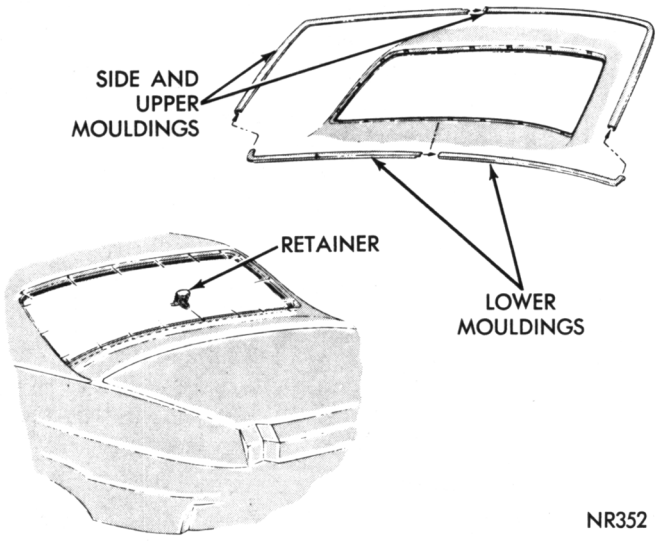

Fig. 12—Rear Window Mouldings—Valiant-Barracuda

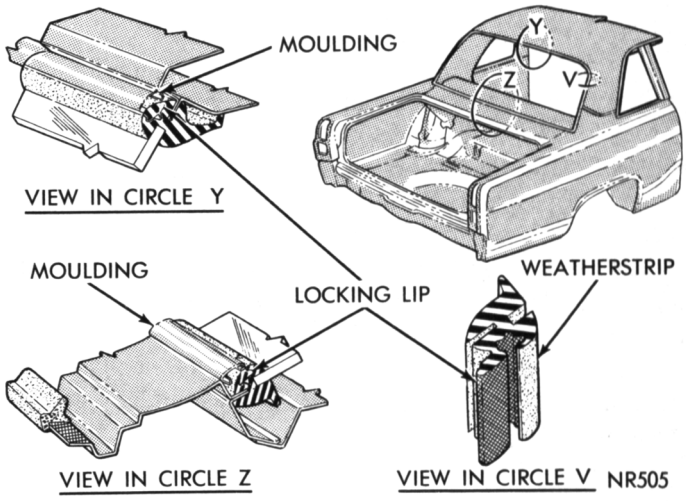

Fig. 13—Rear Window Weatherstrip—Valiant

REAR WINDOW

POLYSULFIDE ADHESIVE SEALED TYPE WINDOW

Satellite Models

Refer to the Fury windshield and rear window service procedures for replacement of the rear window.

WEATHERSTRIP TYPE REPLACEMENT

Removal

(1) Place a protective covering over deck lid, quarter panel and rear window areas. Remove rear window mouldings (Fig. 12) using Tool C-4009.

(2) Using a fiber wedge, unlock weatherstrip by prying weatherstrip apart and with a slight twist move wedge around weatherstrip.

(3) With an assistant supporting glass on outside, from inside car, push against glass at one of the upper corners and remove glass from weatherstrip.

(4) Place glass on a cloth covered bench.

(5) Remove weatherstrip from fence.

Installation

(1) Inspect weatherstrip fence to be certain it is clean, smooth and straight.

(2) Flow a continuous ribbon of cement on each lip and around entire length of weatherstrip glass groove.

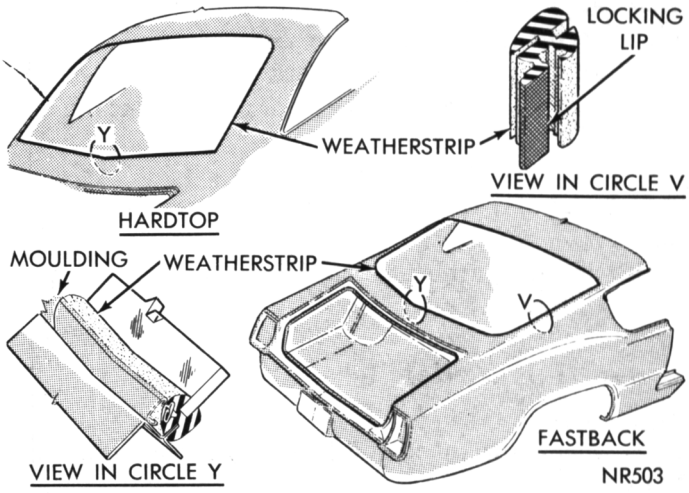

Fig. 14—Rear Window Weatherstrip—Barracuda

(3) Install weatherstrip (Figs. 13 and 14) making sure it is fully seated on fence.

(4) With an assistant, position rear window in weatherstrip.

(5) With palm of hand, tap rear window glass to make certain it is fully seated.

(6) Insert a fiber tool and working around weatherstrip, force locking tab into locked position.

(7) Water test rear window area.

(8) Install window mouldings, clean glass and remove protective covering.

CONVERTIBLE

INDEX

	Page
ADJUSTMENTS	
Cam	126
Control Link	125
Door and Glass Alignment	124
Header	125
Hinge—Front	125
Latching Mechanism	125
Major	123
Minor	123
Roof Side Rail Alignment	123

	Page
Shifting Top	126
Stack Height	126
COVER REPLACEMENT	127
ELECTRICAL TESTS	126
FOLDING MECHANISM	123
OPERATING THE TOP	123
REAR CURTAIN	
RESERVOIR	123
STAY STRAPS	126
WEATHERSTRIPS	127
Header	127
Roof Side Rail	127
Seals and Sealers	127
WELL LINER	127

SERVICE PROCEDURES

OPERATING THE TOP

Raise or lower top only when vehicle is standing still.

To Lower Top

Release safety catch, pull handle down and push top free of the header.

Be sure the well compartment is free of articles. Operate engine in neutral slightly above idle and hold switch control to the **Down** position until top is fully lowered.

To Raise Top

Remove boot, operate engine in neutral slightly above idle and hold switch control in the **Up** position. As dowels seat in their sockets, pull header down firmly and push locking handles forward until catches engage.

RESERVOIR

DO NOT add fluid to a reservoir until it is installed in its normal position in the vehicle. Adding fluid to the reservoir in a position other than its normal installed position does not allow for fluid expansion and damage to the reservoir may result.

Measure fluid level only when top is lowered. After filling reservoir, raise and lower top several times to expel air that may be trapped in system.

Insufficient fluid in the system may cause slow raising or noise in the pump and motor. Measure fluid level and if low, look for a leak due to a broken line or a loose connection. Fill reservoir (use only AQ-ATF Suffix "A" "Dexron" type transmission fluid) until fluid runs out of filler hole.

FOLDING TOP MECHANISM

The electric-hydraulic top folding mechanism (Fig. 1) consists of two cylinders, a piping system, an electrict motor, a pump and reservoir assembly, and a double-throw rotary switch. The wiring and motor are protected by a separate external circuit breaker.

The cylinders are serviced only as an assembly. The reservoir end plate "O" ring is replaceable. The pump cover plate is serviced as an assembly and the rotors are serviced as a package with the "O" rings.

ADJUSTMENTS

Minor adjustments are provided to assist in aligning the top header the windshield header to prevent leakage into this area; to improve top frontal area appearance and assure ease of raising and lowering operation.

They are also provided to assure correct alignment of the roof side rails with door and quarter glass to prevent leakage. Adjustments are provided to eliminate wrinkles in the top material.

Major Adjustments

Major adjustments are at the cam, control link bracket and the outer mounting. These adjustments are necessary to improve roof side rail alignment if minor hinge and header adjustment do not completely correct the condition.

Roof Side Rail Alignment

The roof side rail structure (Figs. 2, 3 and 4) consists of separate rails, hinged together to enable the top to fold into the well. The rails must be in good alignment and parallel to top edges of vent wings, door and quarter glass to provide a good weatherseal. Alignment of the rails is controlled by the side rail structure mounting support assembly (Figs. 5, 6 and 7), cam, control link and the front hinge set screw (Figs. 2, 3 and 4).

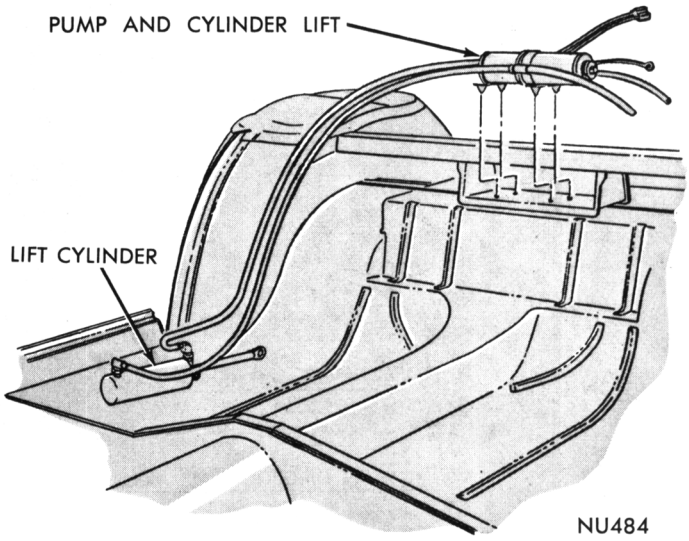

Fig. 1—Folding Top Mechanism

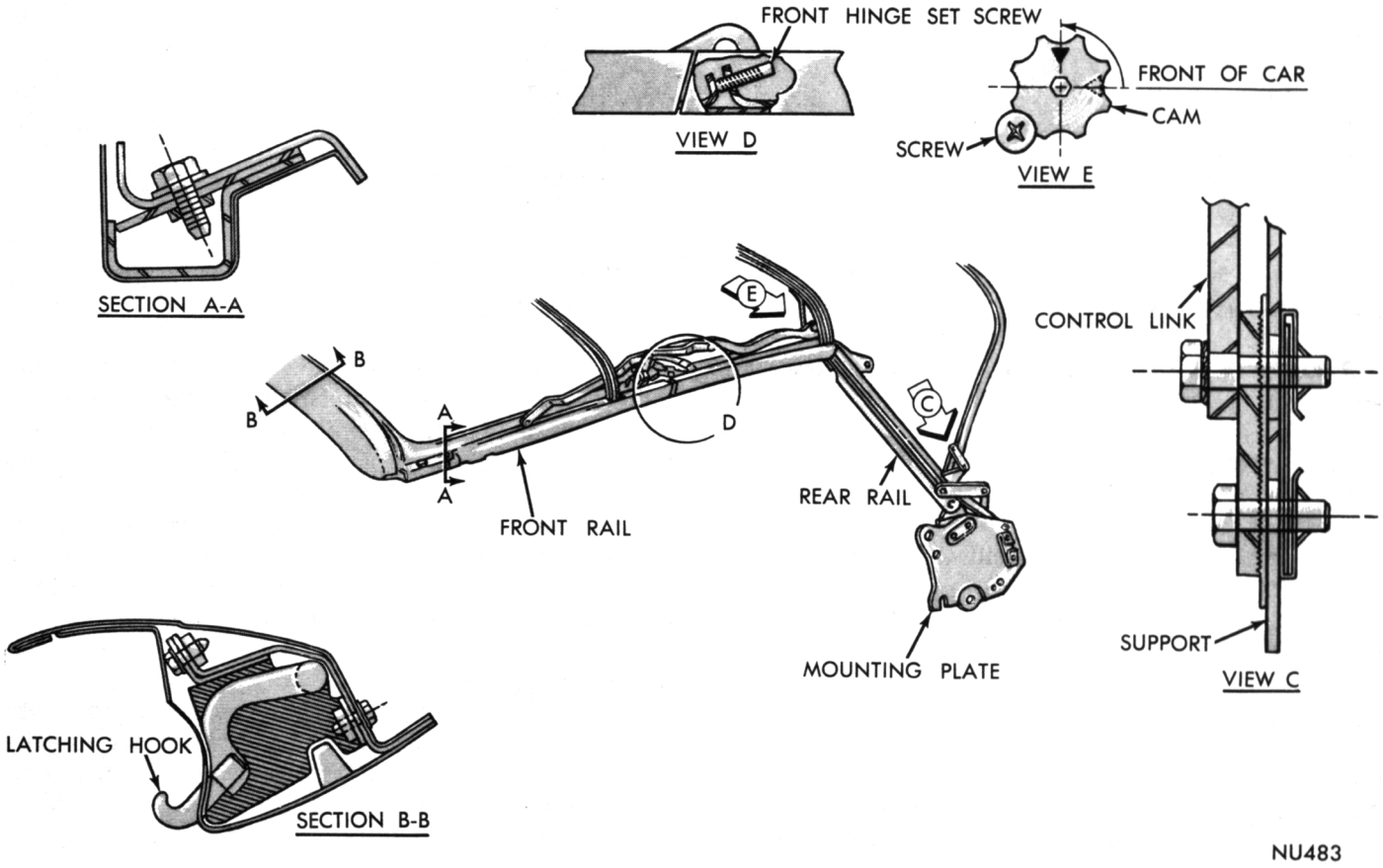

Fig. 2—Side Rail Structure—Fury

The front hinge set screw on Fury models is accessible only from the top of the side rail assembly behind the hinge.

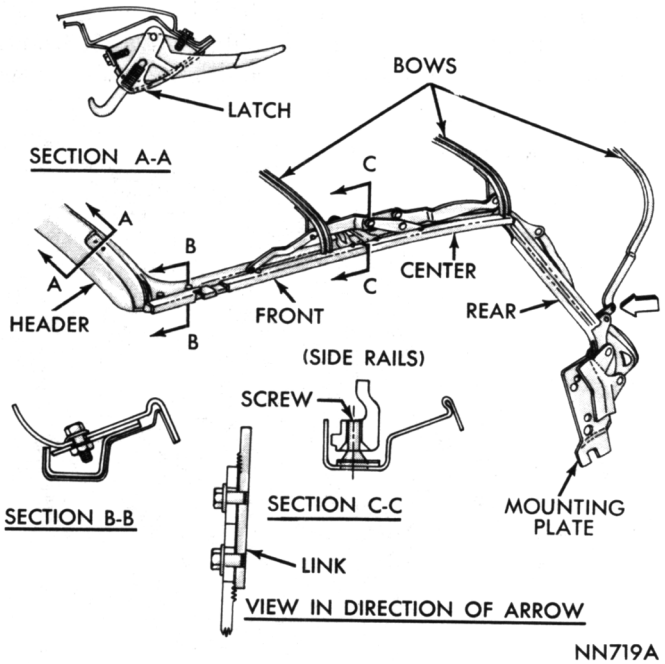

Fig. 3—Side Rail Structure—Satellite

Door and Glass Alignment

After making top adjustments, doors, vent wings, door glass and quarter glass must be properly aligned. Misalignment in any of these areas make it impossible to obtain satisfactory results from top adjustments alone. Glass up-stop adjustments should be made after the correct roof side rail alignment to limit the upward travel of the glass and to assure effective sealing between the roof side rail weatherstrip and glass.

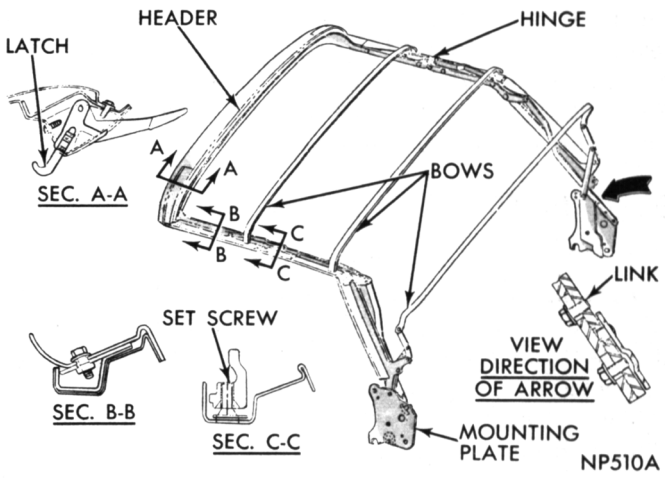

Fig. 4—Side Rail Structure—Barracuda

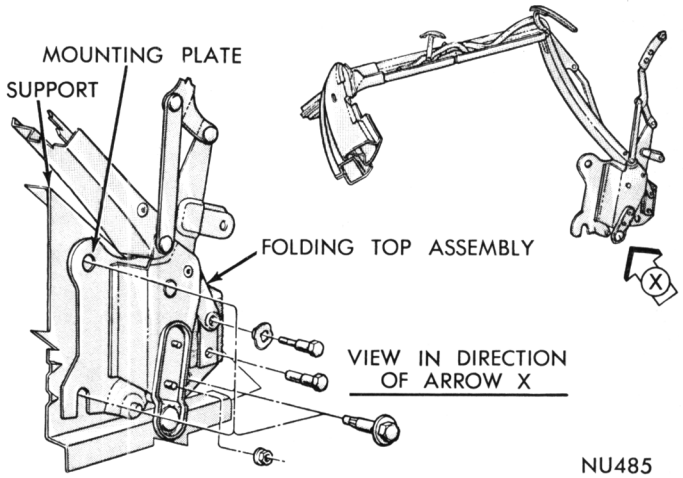

Fig. 5—Mounting Plate Attachment—Fury

Latching Mechanism

Good sealing at the frontal area is dependent upon proper positioning of the top header on the windshield header. The header locating nylon wedges are positioned in the latching mechanism housings and engage sockets in the windshield header to correctly position header.

The latch hook should be adjusted to provide proper compression of the outer weather seal on the folding top header.

The locking and unlocking effort of the latching mechanisms are adjustable. Adjust the header catch to show five of six threads for initial setting.

Header Adjustments

Inspect top linkage and mouldings for sharp edges, burrs or screws that are too long which may damage the top material. Dress or file them down.

The top header is adjustable at the front roof side rails to permit fore-or-aft movement. The header is attached to the side rails by two screws on each side

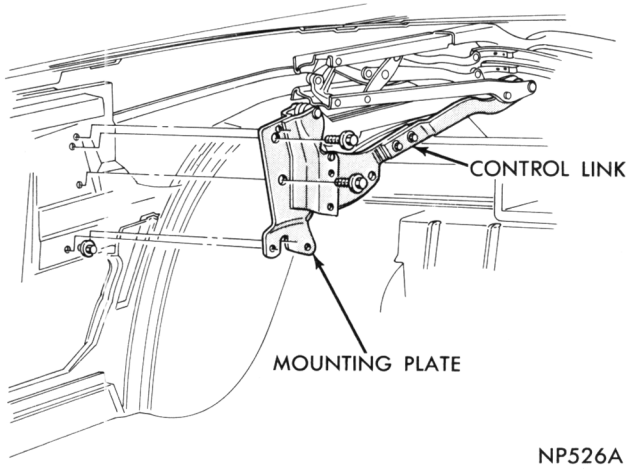

Fig. 6—Mounting Plate Attachment—Satellite

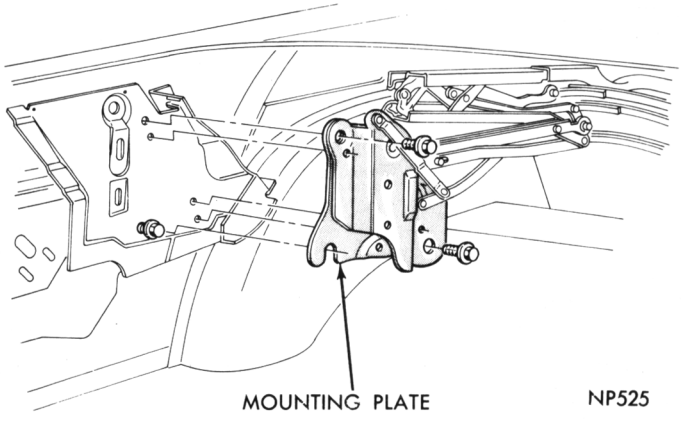

Fig. 7—Mounting Plate Attachment—Barracuda

(Figs. 2, 3 and 4).

Incorrect alignment between the top header and windshield finish mouldings may result in leakage, making it difficult to engage the nylon wedges (Fury models) or dowels (Satellite-Barracuda models) in their sockets or cause objectionable locking and unlocking effort. Inspect clearance for uniformity. The nylon wedges control the fore and aft position of the folding top header.

To eliminate interference between the header and finish moulding, rotate the cams on the side rail so the cam lobes are forward. **It may be necessary to lengthen the control links one or two serrations after the cam adjustment.** If cam lobes were already in the full forward position, it may be necessary to loosen the header-to-side-rail screws and adjust header to provide proper clearance.

Front Hinge Adjustment

To facilitate front hinge adjustment, unfasten header latches and partially lower the top before adjusting set screws.

Leakage between the top and door or quarter glass may be caused by poor contact between roof side rail weatherstrip and glass or only a partial contact between roof rails and top edge of glass. If inspection shows leakage is due to incorrect side rail alignment at the front hinge, adjust set screw until front and center side rails provide the proper glass line. When the rails sag, it indicates the control link is too long.

Control Link Adjustment

The control links incorporate serrated adjusting links. Loosen screws just enough to permit moving links up or down.

Raise the side rail assembly by lifting the front end of the center rail until the folding top header is six to eight inches above the windshield header. Loosen the control link adjusting screws and allow the control link to seek its proper position. Tighten screws while rail assembly is held in the position described above.

Cam Adjustment

The cam assembly (Figs. 2 and 8) is used to change top header position in relation to the windshield header. The cam turns inside the rear side rail and the thrust link. When rotated, it changes the relationship between the front and rear side rails by moving the thrust link forward or rearward.

The position of the cam high side determines the angle between the center and rear side rails. When the high side is fully forward, the angle is at the minimum and when turned rearward the angle is increased. An increased angle increases the forward "throw" of the entire top assembly.

On Fury models, the cam lobe position is indicated by a single triangular mark on the cam. Three triangular marks on the side rail (all models except Fury) indicate the amount of cam rotation when adjusting. The marks are located at the full-forward position of the high side, 45 degrees up and 90 degrees up. When adjusting, the cam high side position can be determined by referring to the notch and the triangular marks. Before adjusting, place top in half raised position to remove all possible strain off the cam. Make sure lock nut is loose. Tap cam threaded end with a soft-faced hammer to loosen any paint bond between cam and linkage.

On Fury models, the cams are adjusted in 45 degree increments only.

Stack Height

Do not move mounting plate positions until control links have been adjusted.

Stack height should be correct if the control links have been adjusted as outlined. If control link adjustment does not correct stack height, loosen lower two of the three mounting plate screws (Figs. 5, 6 and 7). Force lower portion of mounting plates to rotate fully forward while exerting pressure downward on both sides at top of side rails. Tighten screws and inspect stack height after raising and lowering top.

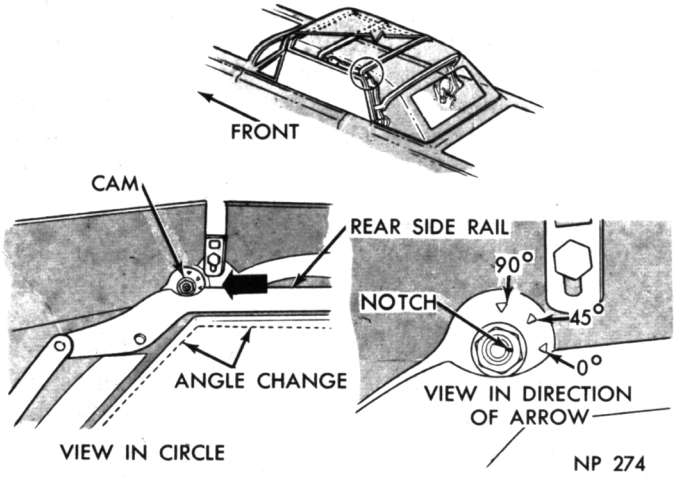

Fig. 8—Cam Assembly—Barracuda—Satellite

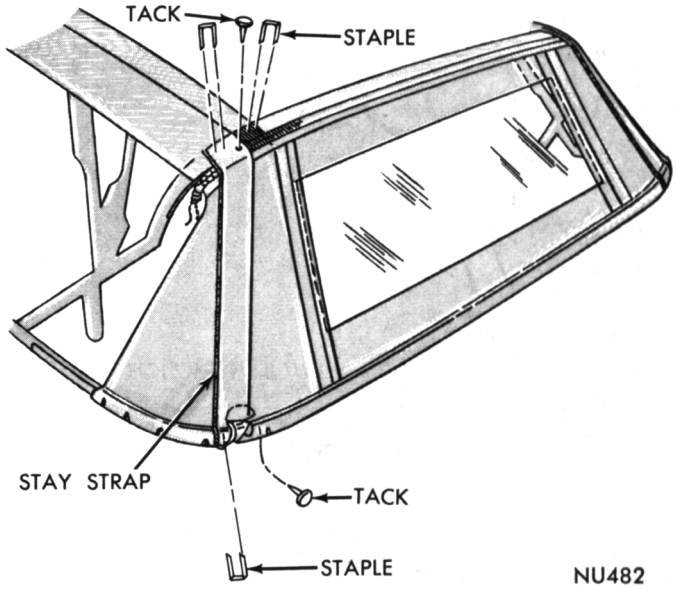

Fig. 9—Stay Straps—Fury

Top Shifts To One Side

If necessary to pull top to one side to engage locating dowels or wedges, or top shifts to one side when raising from the windshield header, inspect positions of control links. It may be necessary to adjust the control links unevenly to achieve proper alignment of the top.

Stay Straps

Two web straps attached to the rear bow and the tacking strip are provided to keep the number 3 bow from moving forward and wrinkling the top material. The straps are attached to the tacking strip with tacks and staples (Figs. 9 and 10).

ELECTRICAL TESTS

Refer to the Electrical Group for tests and wiring diagrams.

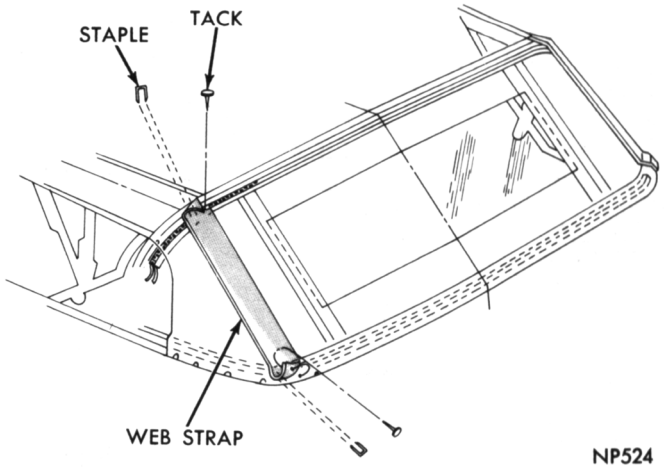

Fig. 10—Stay Straps—Barracuda-Satellite

WELL LINER

The well liner (Fig. 11) is attached to the quarter panel belt area tacking strip with stud snap-on type fasteners.

When installing liner, apply a thin coat of cement to the front face of liner lower edge approximately two inches wide at area where liner attaches to upper face of rear seat back support. Apply cement to area contacting wheelhouse cap.

WEATHERSTRIPS

Roof Side Rail

After roof side rails have been aligned, inspect side rail weatherstrip to make sure it is providing a good seal at top of door and quarter glass.

If not sealing properly, the retainer can be adjusted. The retainer has elongated attaching screw holes. Raise glass until top edge of curls outer lip of weatherstrip inward just enough to contact inner lip. Adjust up-stops to limit further upward travel of glass.

Top Header Front Weatherstrip and Welts

Leakage between the top and windshield headers is eliminated by a tube type weatherstrip (Figs. 12 and 13) secured to the underside of the top header. The forward edge of weatherstrip contacts the windshield header outside moulding. On Satellite-Barracuda Models, a rubber welt is cemented to the header flange.

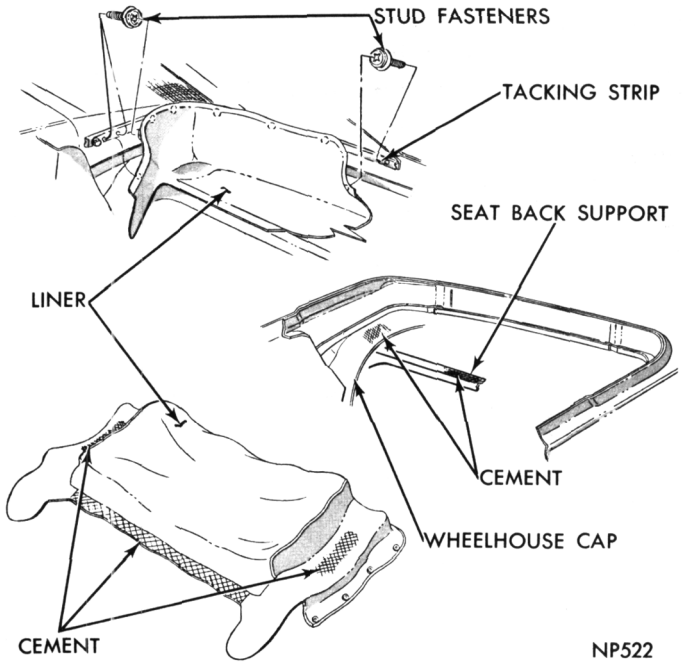

Fig. 11—Well Liner

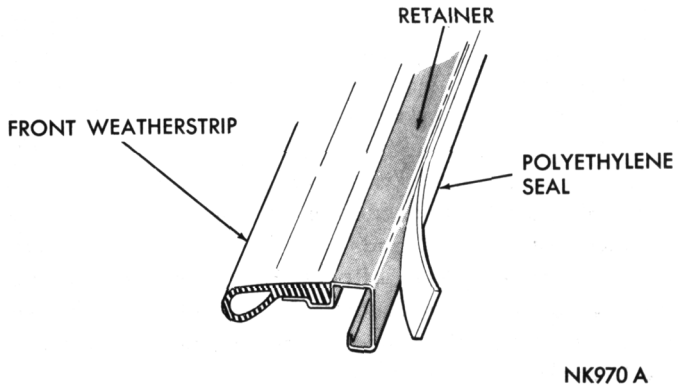

Fig. 12—Header Front Weatherstrip—Fury

Seals and Sealers

Clean all areas thoroughly, before installing weatherstrips and seals.

When repairing or replacing a seal or weatherstrip at the header and pillar areas, make certain they are firmly seated, in correct alignment and free of twists.

COVER REPLACEMENT

Procedures for attachment of the cover material at the top header and rear bow areas are basically the same for Fury—Satellite—Barracuda models.

Removal

Inspect weatherstrips for damage or excessive wear before removing the top cover. Test adjustment of rear tension cables or web straps. Inspect cover cables for being correctly connected and stay pads for excessive wear or moisture stains.

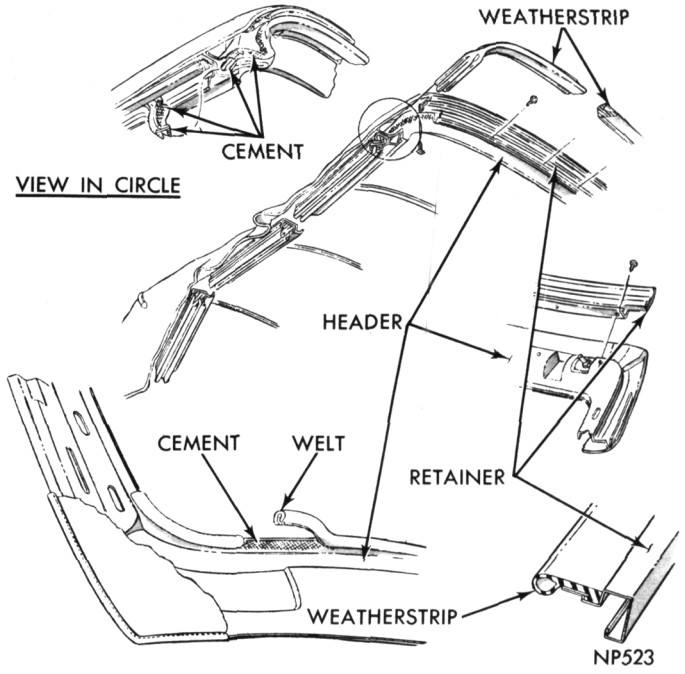

Fig. 13—Header Front Weatherstrip (Except Fury)

(1) Place protective covers over deck lid, upper panel, hood and cowl areas.

(2) Remove staples, attaching moulding retainer to roof bow and remove retainer.

(3) Using a sharp pointed tool remove staples and tacks at rear bow. **Use care not to damage top material if original cover is to be reinstalled. In some instances the staples ends may have become peened over and if excessive effort is required to remove them, it is advisable to cut the heads off and remove pieces after cover has been removed, otherwise damage to the material may result.**

(4) Remove staples and tacks (one tack used on each side) at binding areas attaching cover to the rear bow.

(5) Remove the top boot.

(6) Prop the top off of windshield header and remove moulding from top header. The moulding attaching screws are located under the weatherstrip.

(7) Raise top of the 1/2 open position and remove rear roof rail weatherstrip. Mark location of retainer screws on roof rail to aid in reassembling, and remove retainer.

(8) Remove top and rear curtain material from roof rail.

(9) Raise top completely and remove trim in well area to permit removal of top material from tacking strips (Figs. 14, 15 and 16).

(10) Remove staples, drive nails and tacks attaching material to the header.

(11) Mark location of top material bead on ends of cover pads.

(12) Loosen vent wing seals at the corners.

(13) Remove front screws from front roof rail weatherstrip retainers and remove top material locking flaps (Fig. 17) from between retainer and roof rail.

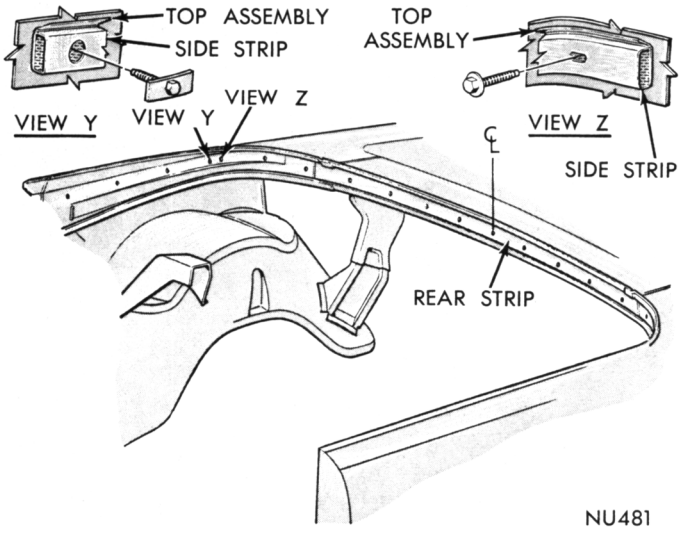

Fig. 14—Cover Tacking Strips—Fury

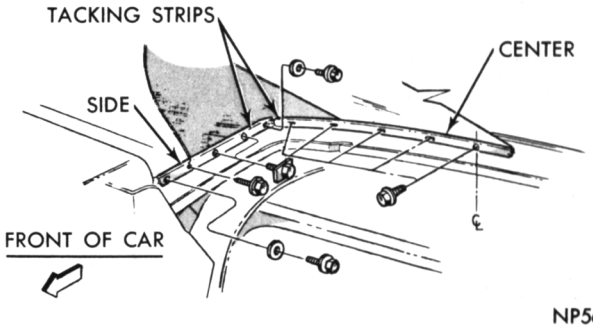

Fig. 15—Cover Tacking Strips—Satellite

(14) Remove tension cables and attaching bracket assembly (Fig. 17) at front roof rail and number 3 roof bow. If original cover is to be reinstalled tie a cord to one end of cables prior to removing. When cables are removed, the cord should be left in listing to aid in reinstalling cables.

(15) Remove cover from folding linkage.

Installation

Prior to installing cover, inspect bow pads for moisture or damage. The pads are a press fit in the bows. The cover stay pads should be inspected for damage and moisture. The backlight zipper top half is attached to the rear bow with staples.

(1) Insert cables in cover listings. Use cords to install cables in original cover.

(2) Locate and mark center line on top header, rear bow and at each end of new cover.

(3) Position cover on folding top structure.

(4) Align center line marks on cover with marks on structure.

(5) Block top header off the windshield header approximately four inches to relieve all tension on cover when it is being installed in the well area.

(6) Install cover on tacking strips with tacks spaced approximately 6 inches apart.

(7) Pull material into position at corner of windshield header and align cover bead with alignment mark on pad end.

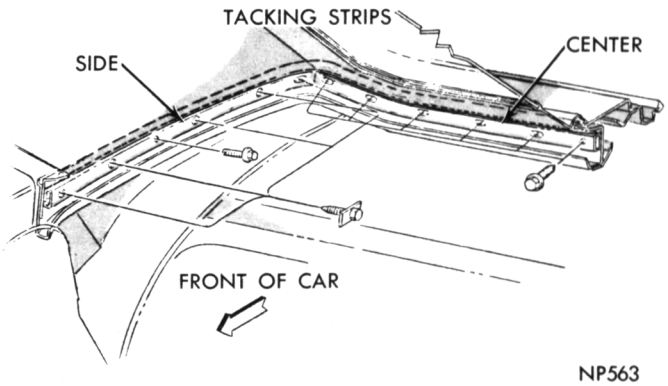

Fig. 16—Cover Tacking Strips—Barracuda

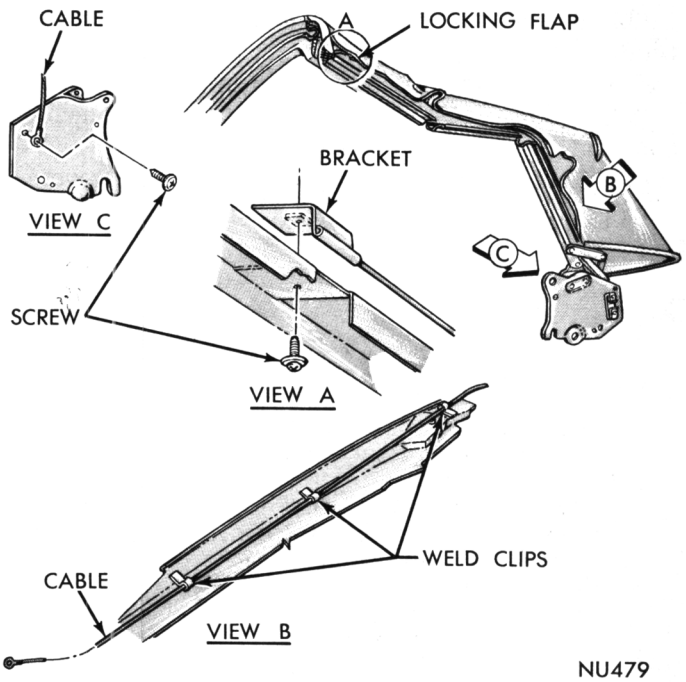

Fig. 17—Cover Locking Flaps and Tension Cable

(8) Tack covers in position at corner and bead area only. Space tacks approximately one half inch apart.

(9) With cover in position at quarter panel and center line marks in alignment, tack cover to corner and bead area of roof bow only (Fig. 18).

(10) Repeat steps 7, 8 and 9 on opposite side.

(11) Connect cover cables and brackets, lock header in place and inspect fit of cover at rear bow and top header.

(12) Raise top to one half open position and apply a bead of rope type sealer to back of rear roof rail weatherstrip retainers.

(13) Apply cement to rear roof rail and between rear curtain and top cover at area where they fit on roof rail and position on rear pillar.

(14) Position weatherstrip retainers on roof rails and using a sharp pointed tool align screw holes in curtain and cover material with holes in roof rails. On new covers use tool to make holes in cover.

(15) Install retainer screws and weatherstrips. Raise top completely and lock into position.

(16) Open and close both front doors several times and inspect fit of cover in relation to top of door glass and vent wings. Should either vent wing or door glass contact beading on edge of cover on one side, the cover may be loosened at the header and moved slightly toward the opposite side until clearance is obtained. Should contact at both doors be made, it will be necessary to build up cover pads on both sides to eliminate interference.

(17) While keeping center line of cover and header in alignment, tack one half of cover to the header.

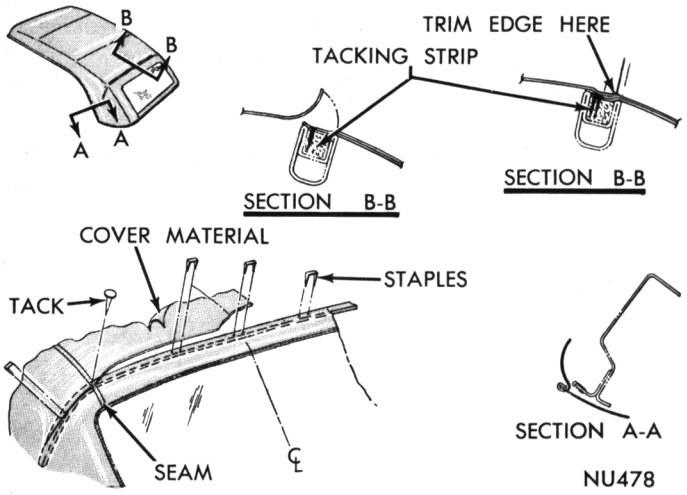

Fig. 18—Tacking Cover at No. 3 Roof Bow

Space tacks approximately one inch apart.

(18) Install a drive nail at lower front edge of cover and one long tack through cover beading to the header.

(19) At rear bow on same side, make certain center line marks of cover and bow are in alignment and tack cover into position spacing tacks approximately 1/4 inch apart. Install a large tack through cover beading at rear bow.

(20) Complete tacking of cover at tacking strips, spacing tacks 1/4 inch apart.

(21) Repeat steps 17, 18 and 19 for opposite side. Inspect alignment of cover and if satisfactory complete tacking operation at the header. **Make sure all wrinkles are removed at header during tacking operation. Do not allow cover material to lap over.** Tacks should be installed approximately 1/8 inch apart.

(22) Position locking flaps at front outer edge of cover between weatherstrip retainers and front rail. Install retaining screws and weatherstrips.

(23) **Use care not to allow cement outside of tacking strip area** and apply cement across tacking area, making sure each tack is completely covered.

(24) Apply cement between outer edge of cover and header. Press cover firmly down on header.

(25) Position header moulding retainer on header Align moulding retainer clips with holes in header and install screws.

(26) Apply cement to vent wing seals and press into place.

(27) Apply cement to header weatherstrip, where loosened to expose moulding attaching screws, and press firmly into place.

(28) **Use care not to allow cement to extend outside of the tacking area** and apply cement to tacking area on rear bow making certain each tack is completely covered.

(29) Apply sealing tape, same color as cover, and slightly narrower than width of moulding retainer across tacking area. Press firmly into place.

(30) Install moulding retainer over tape.

(31) After retainer has been installed, insert moulding in retainer from either end and install end caps.

(32) Position mouldings on quarter panels and rear window moulding retainers and install snap retainer and screw assemblies. **Do not overtighten.**

(33) Test operation of top and inspect fit at header, door and quarter window areas.

(34) Remove masking tape and protective covers.

SEALING

INDEX

	Page
SEALER APPLICATION	
Methods of Applying Sealers	131
Fury	
Dash Panel Inside Area	130
Pillars	131
Quarter Inside Panel	130
Quarter Window Area—Station Wagon	133
Tire Well and Floor Pan—Station Wagon	137
Underbody Area	132
Satellite	
Belt Bar Area	138
Cowl and Floor Pan Areas	135
Deck Lid—Tail Light Areas	139
Drain Trough and Pillar Areas	134
Station Wagon Rear Areas	136
Valiant-Barracuda	
Cowl-Dash Panel—Floor Pan Areas	138
Deck Lid and Tail Light Areas	139
Door Frames and Drain Troughs	133
Floor Pan Areas	140
Pillar and Drain Trough Areas	137
Quarter Inner Panels	138
SEALERS AND COMPOUNDS	131
TESTING	130

GENERAL INFORMATION

The procedures for weatherstrip sealing and replacement are incorporated with the procedures of the component unit.

The sealing illustrations used in this section show the area sealed during manufacture of the vehicle. These areas should be considered when testing for leaks.

SERVICE PROCEDURES

TESTING

Water Method

Normally a visual inspection of an area will indicate the area for sealing. When testing with water, use a spray simulating rain or a garden hose without the nozzle and regulate the pressure to an approximate 3 inch stream. All water tests must be made starting at the bottom of the door opening or weatherstrip and slowly moving up the joint, seam or suspected area.

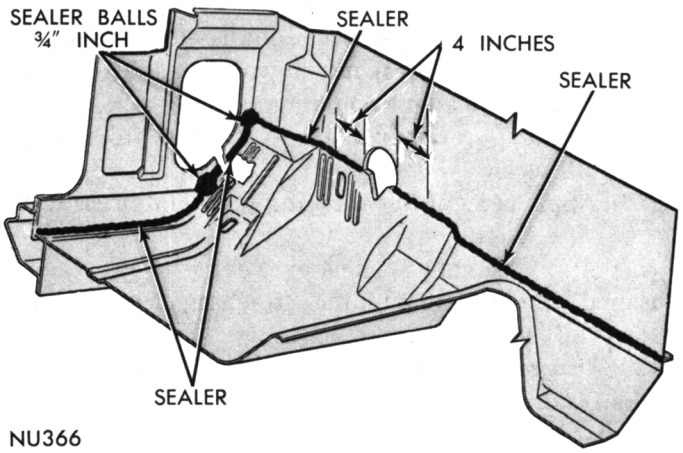

Dash Panel Inside Area—Fury

Powder Method

To test the sealing between the body and the

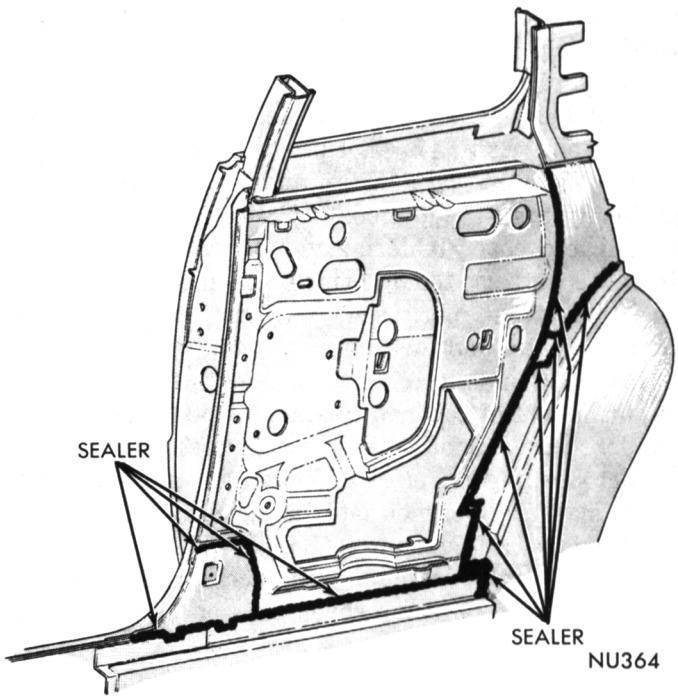

Quarter Inside Panel—Fury

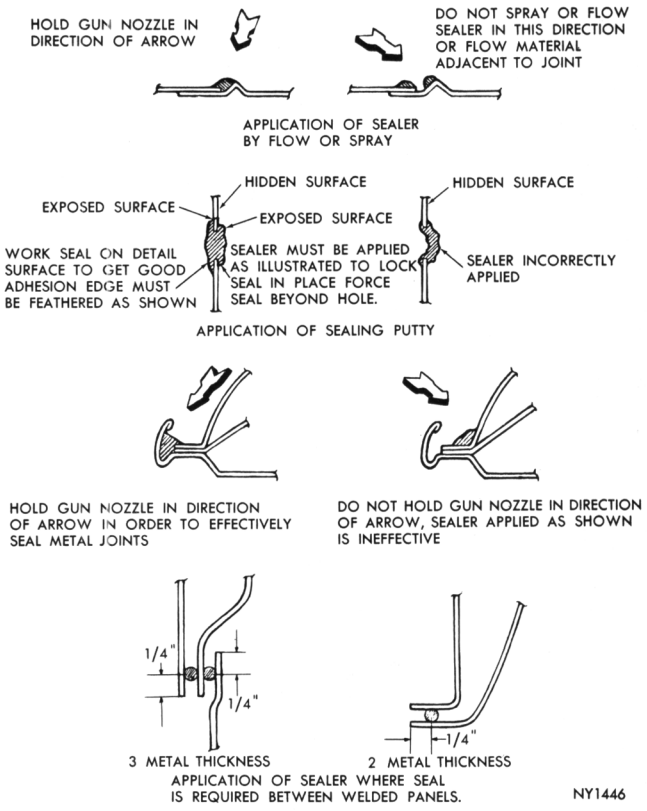

Methods of Applying Sealers

weatherstrips, it is advisable to use trace powder and a test bulb. When the powder is sprayed at the point where a leak is suspected it will leave a trace line through the point of leakage.

In hard to reach points, such as the dog leg at the "A" post, blue carpenter's chalk applied to the weatherstrip will transfer to the "A" post when the door is closed if a good contact exists.

SEALERS AND COMPOUNDS

Super Rubber Cement—May be used where a strong bonding of rubber parts to painted or unpainted steel surfaces is desired, attachment of weatherstrip on doors and luggage compartment lid or for attachment of felt pads.

Windshield Rubber Seals—A heavy viscosity, rubber expander. Sealer can be used where rubber is confined between a glass and metal channel, such as on the windshield and rear window glass assembled in one-piece type weatherstrips. Sealer will not harm paint or chrome finish and can easily be removed with a cloth before it sets.

Body Seam Sealers—For External Sealing along welded joints, exterior roof rails, exterior belt lines, B-post welds, weatherstrips and floor seams. Upon drying, the sealer forms a tough skin which can be painted with a touch-up brush.

Heavy Sealing Putty (For Interior Sealing)—A heavy, fibrous, putty-like compound, which can be formed or rolled into pellets or long string shapes.

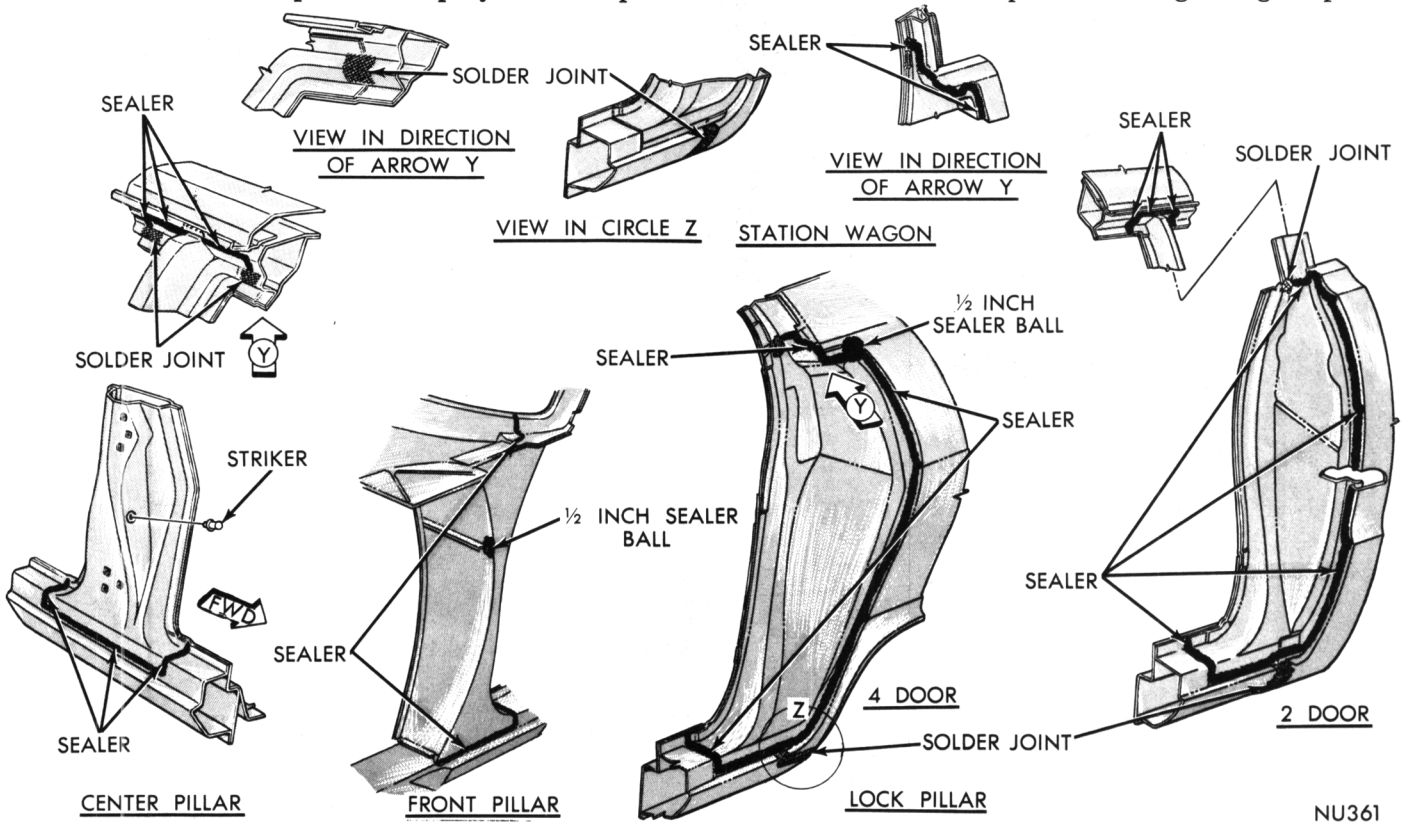

Pillars—Fury

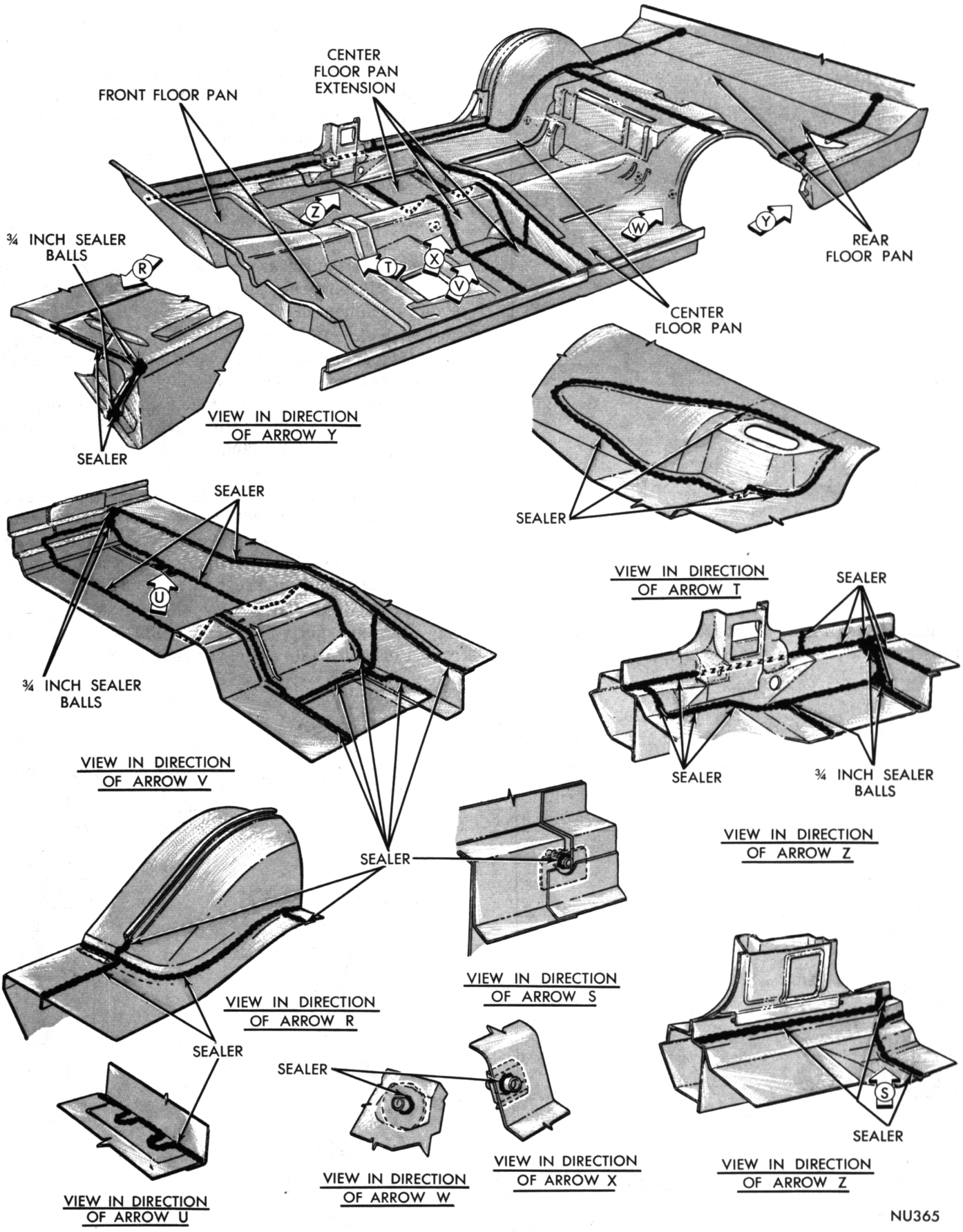

Underbody Area—Fury

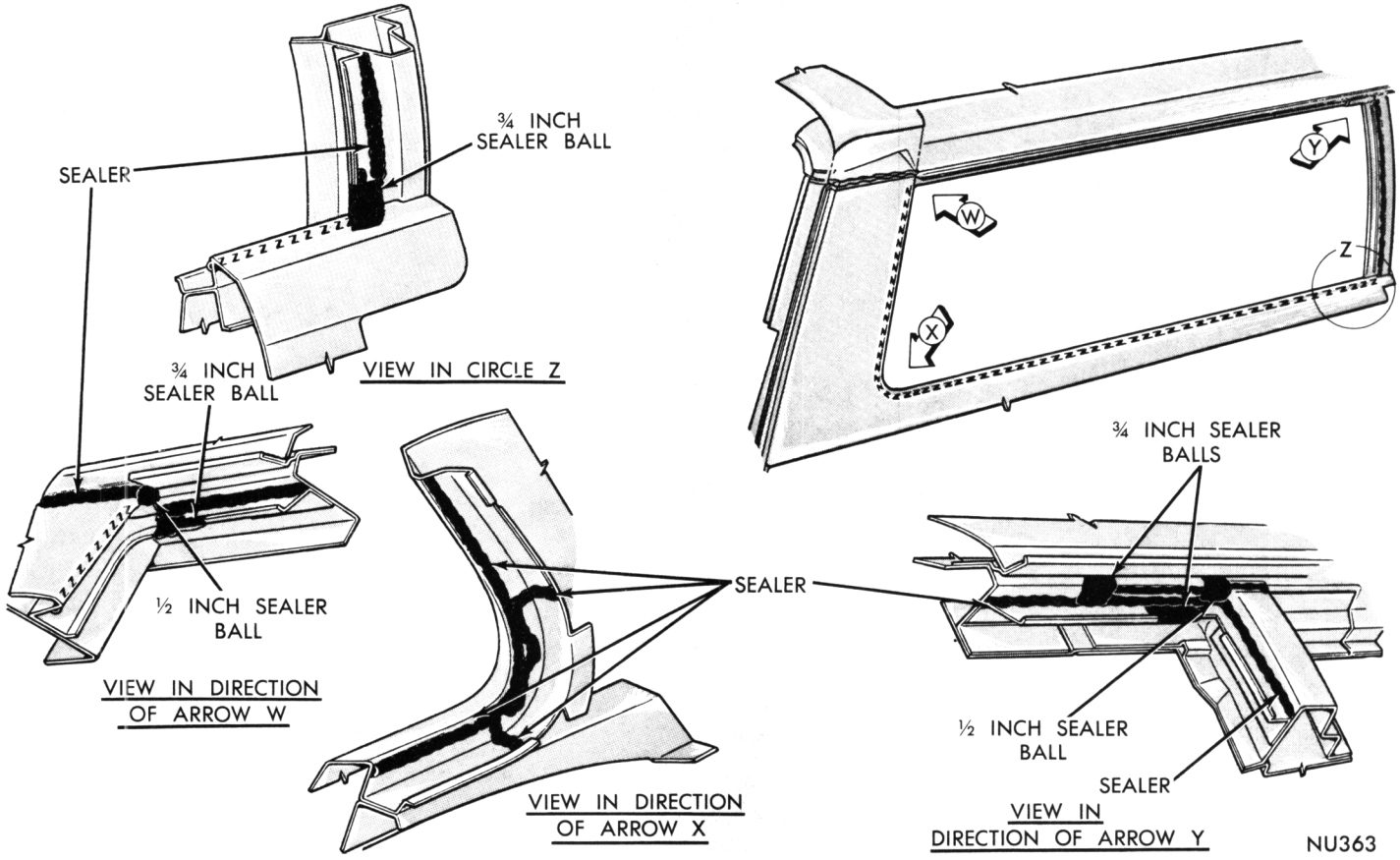

Quarter Window Area (Station Wagon)—Fury

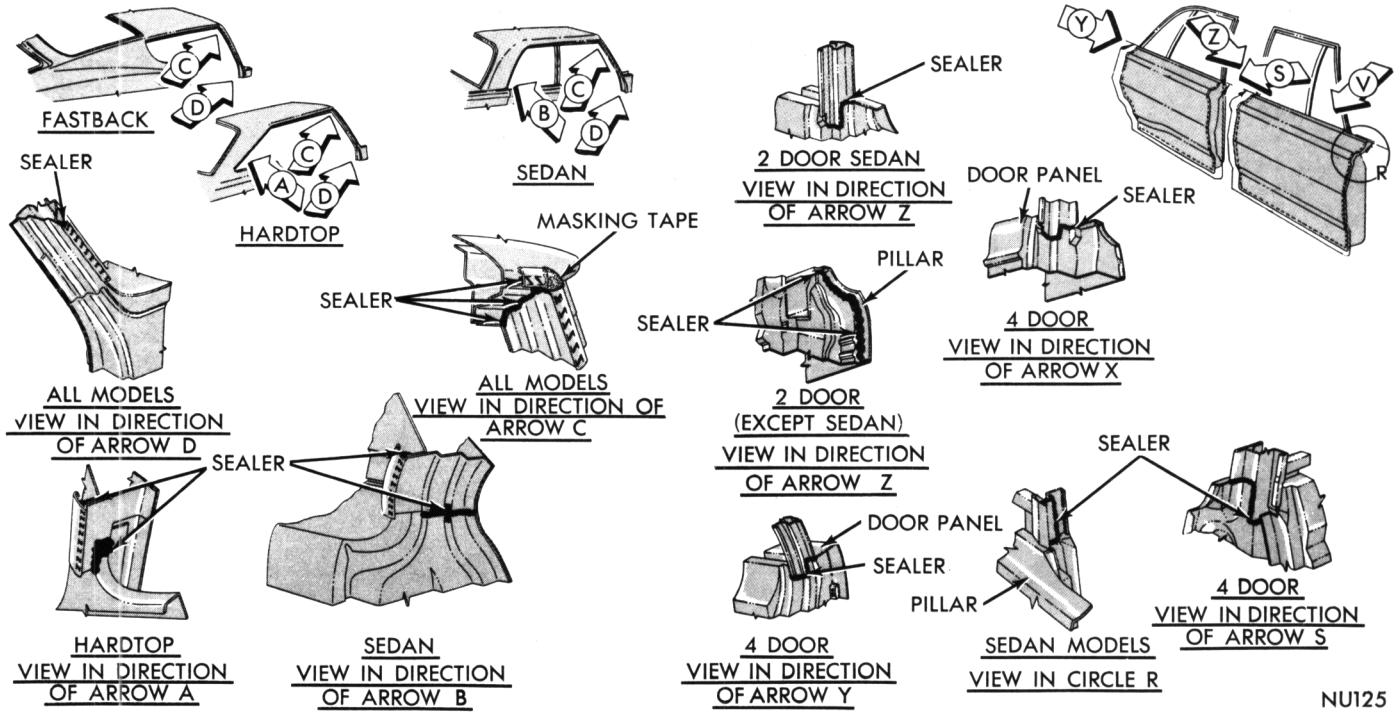

Door Frames and Drain Troughs—Valiant-Barracuda

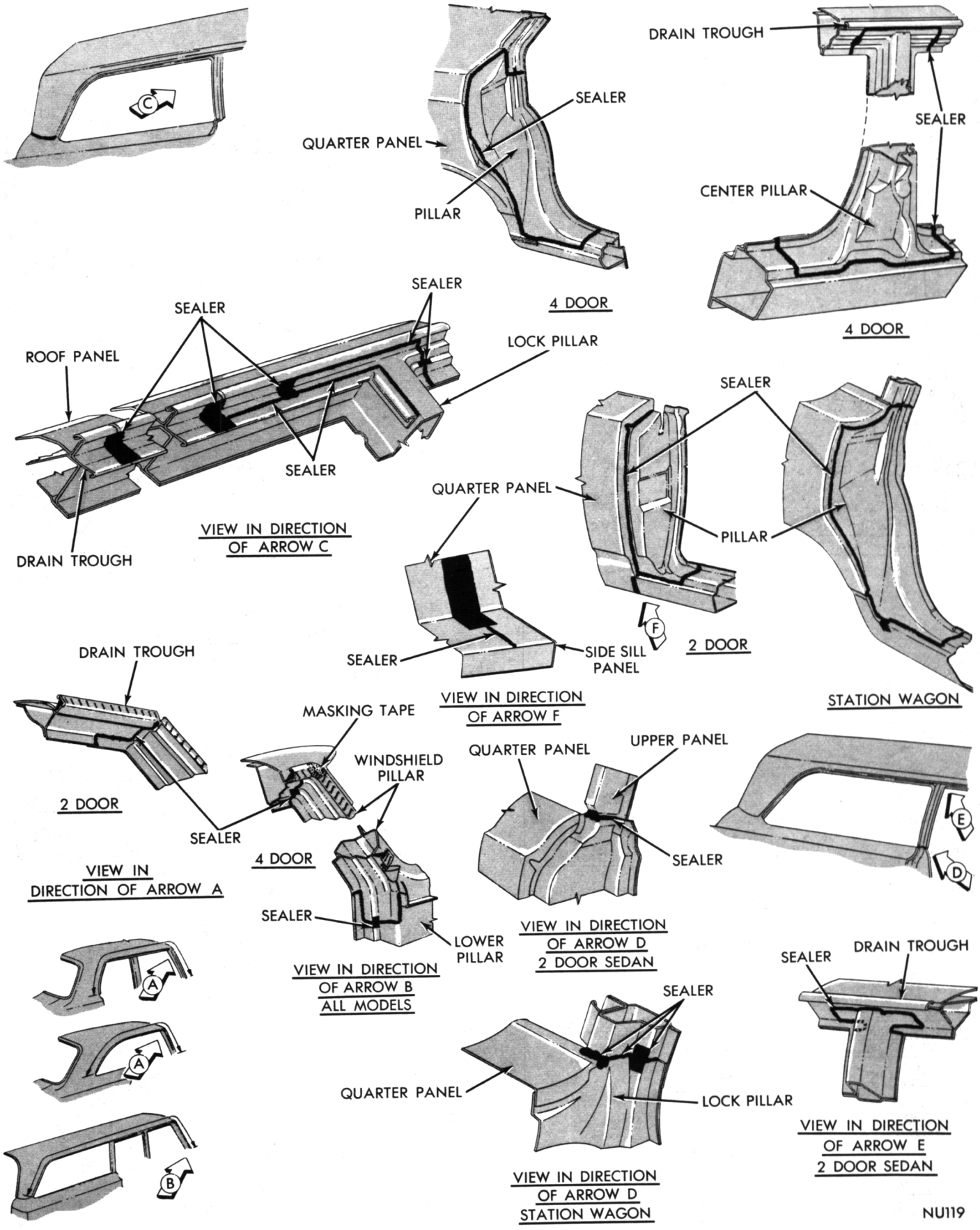

Drain Trough and Pillar Areas—Satellite

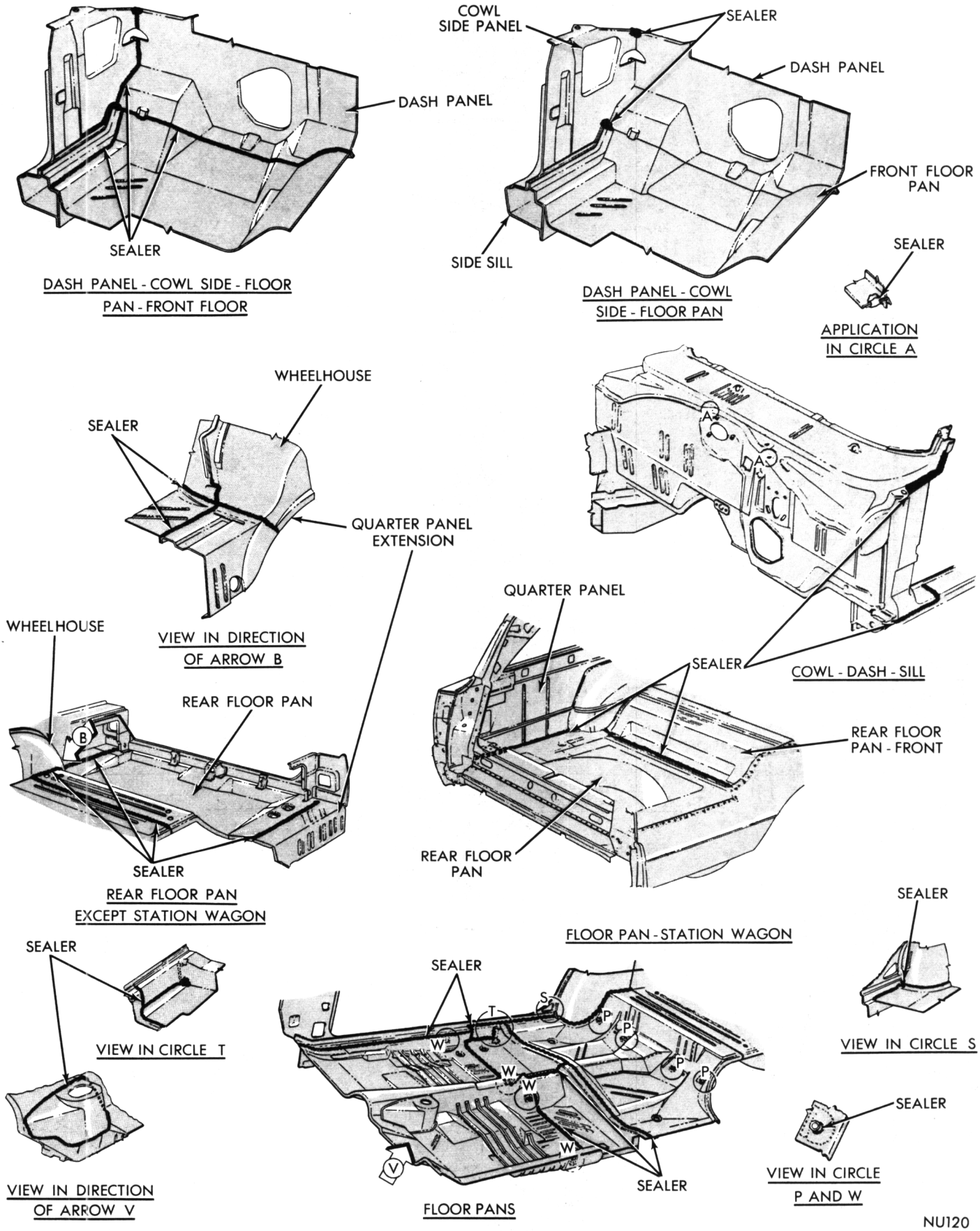

Cowl and Floor Pan Areas—Satellite

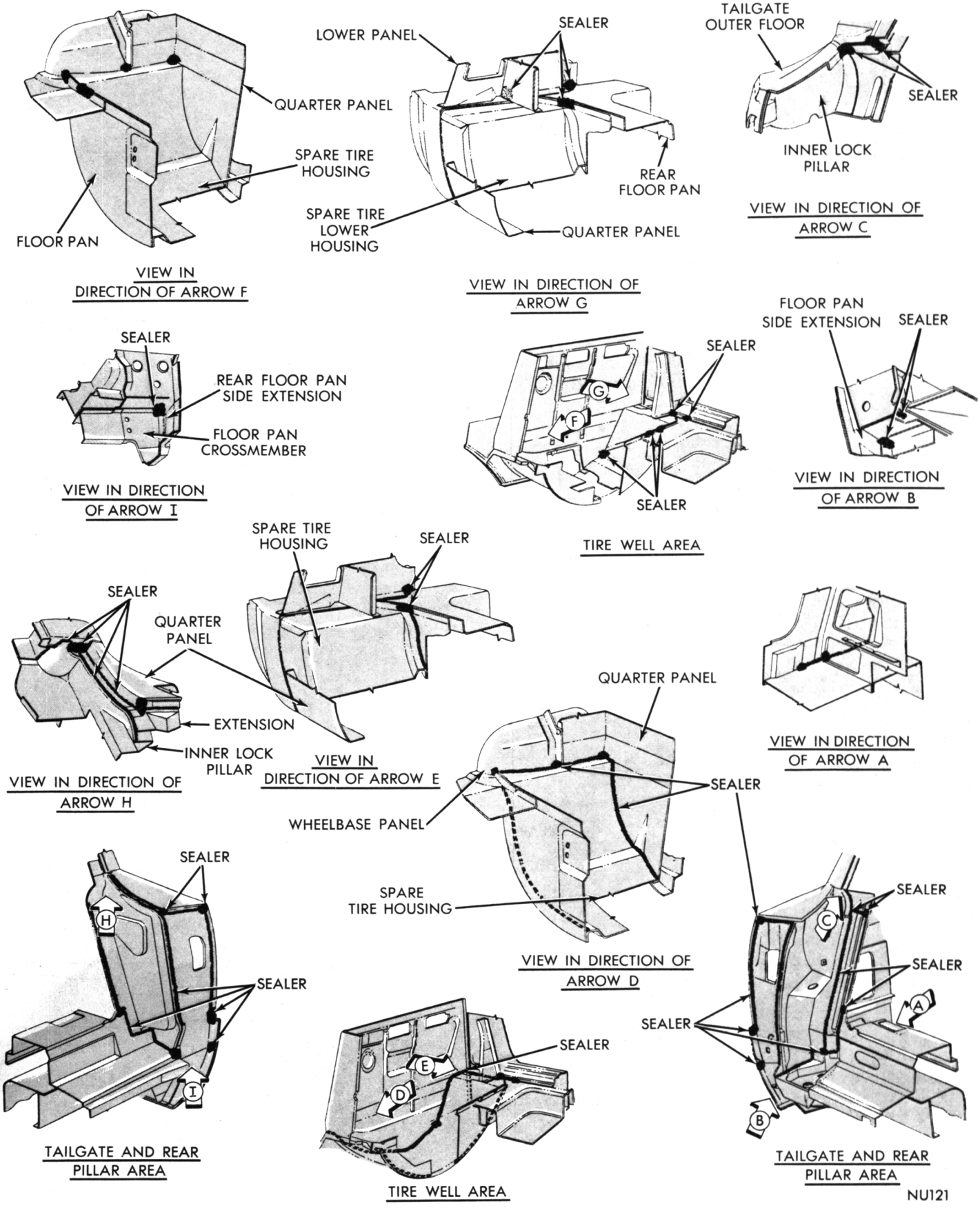

Station Wagon—Rear Areas—Satellite

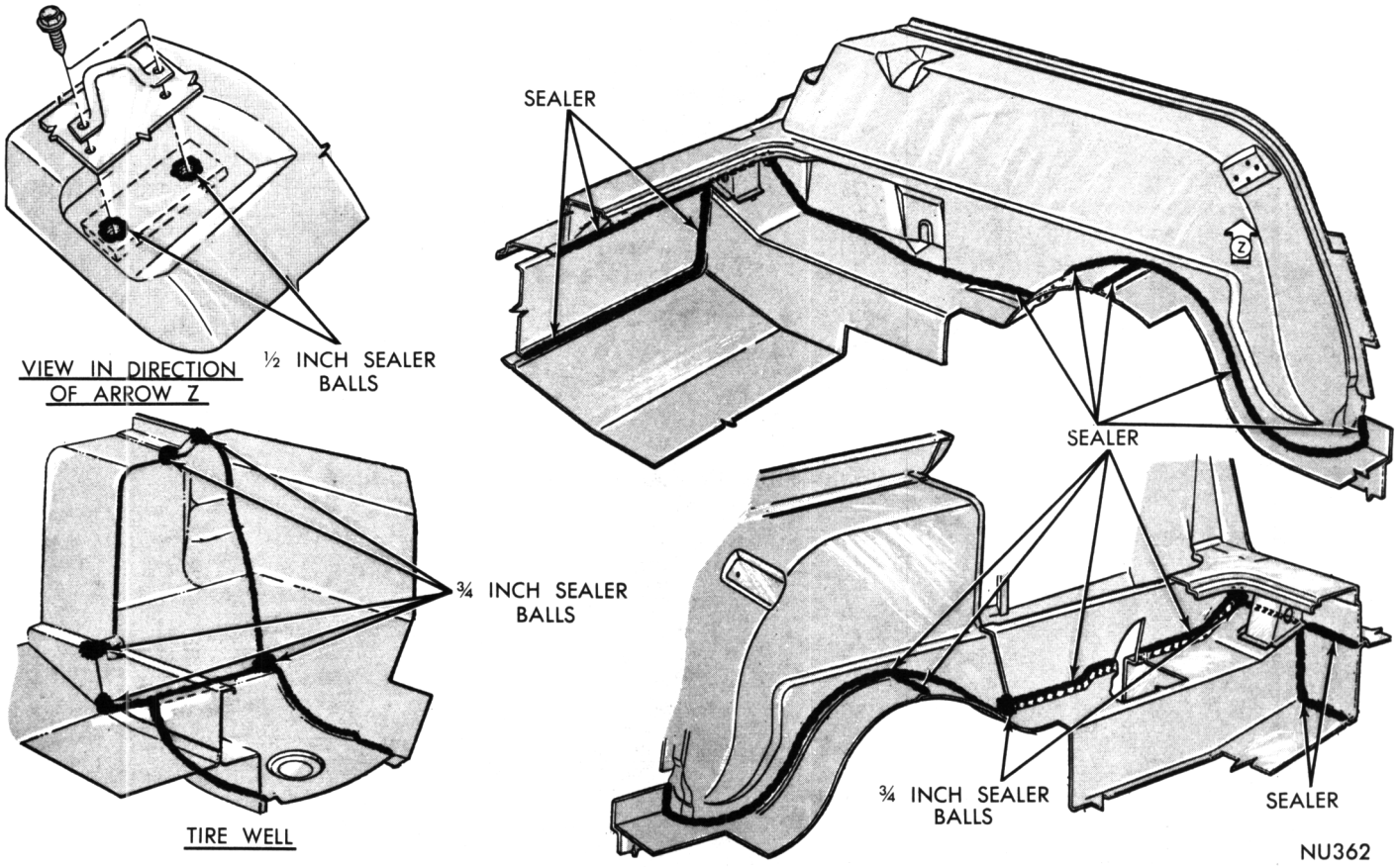

Tire Well and Floor Pan (Station Wagon)—Fury

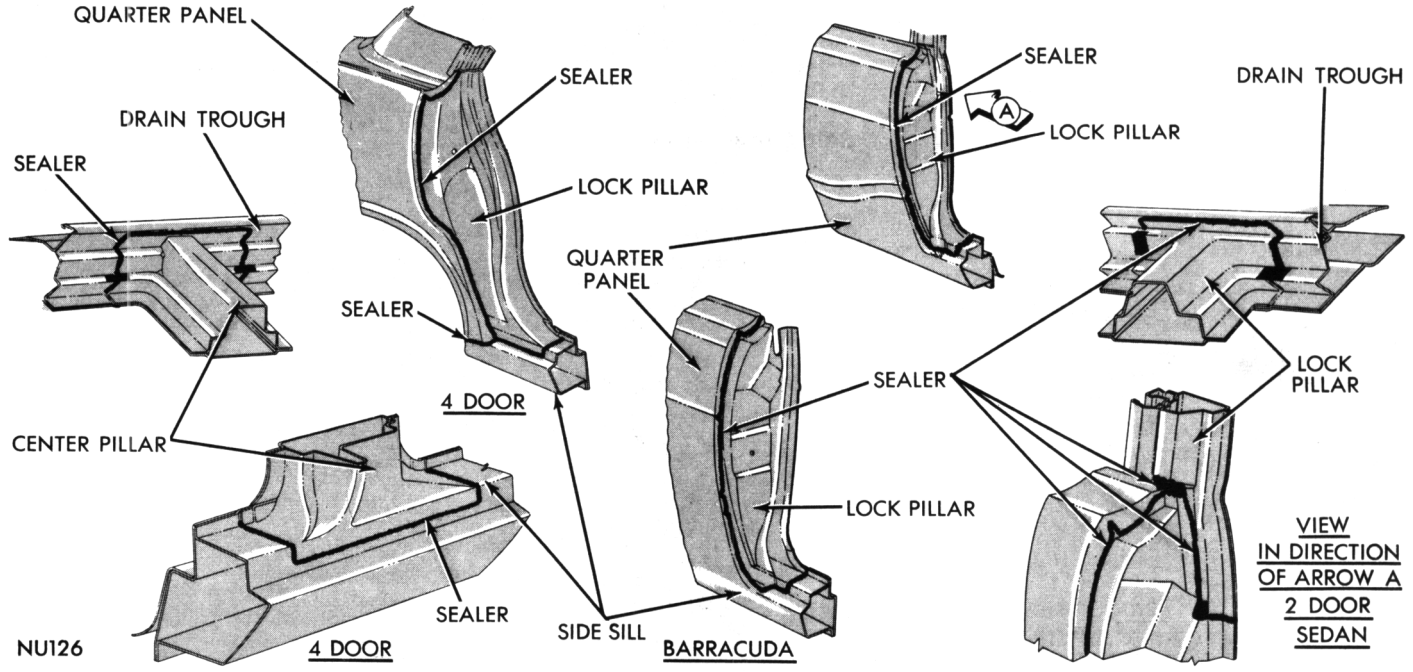

Pillar and Drain Trough Areas—Valiant-Barracuda

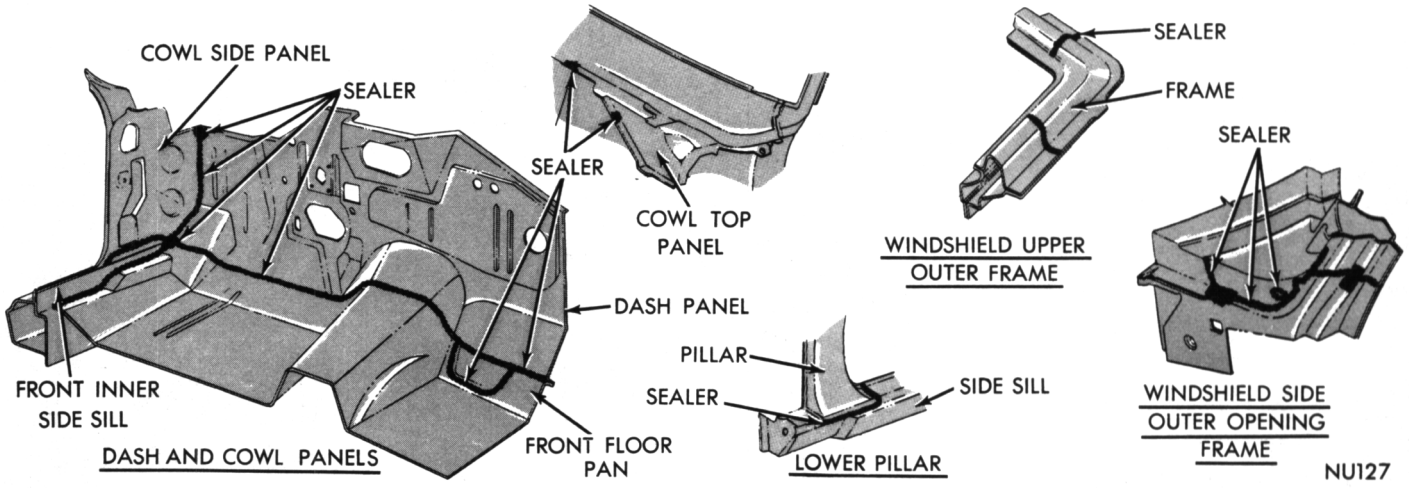

Cowl—Dash Panel—Floor Pan Area—Valiant-Barracuda

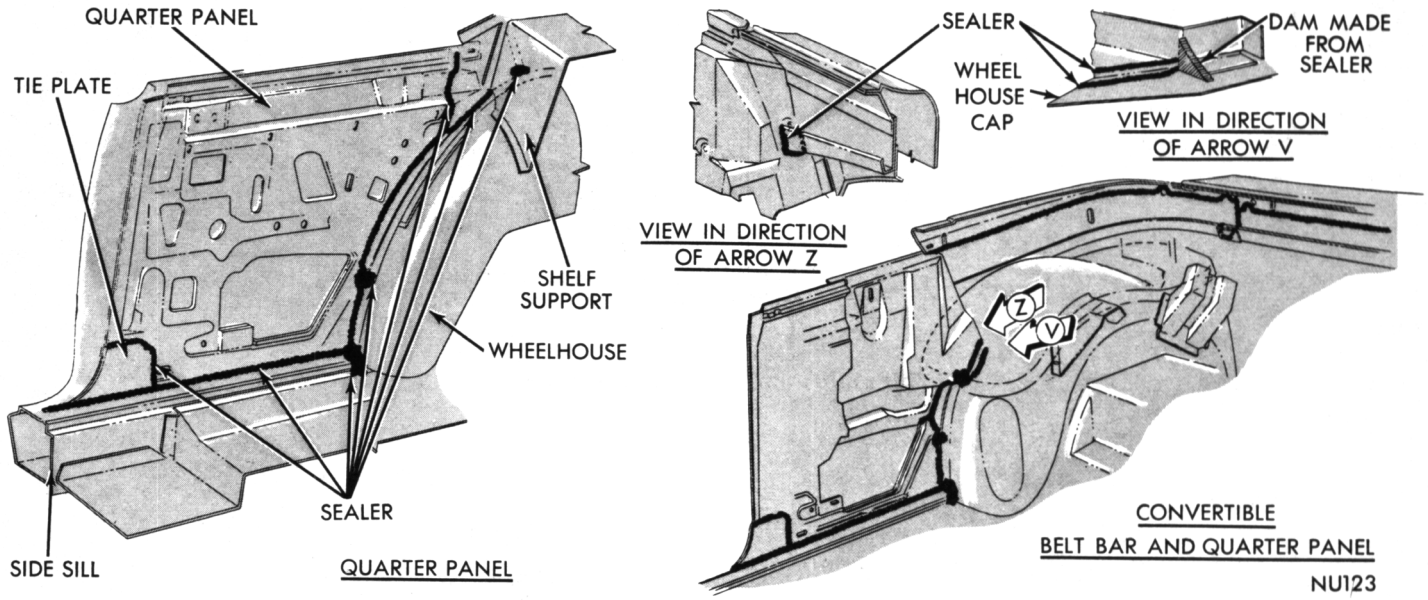

Belt Bar Area—Satellite

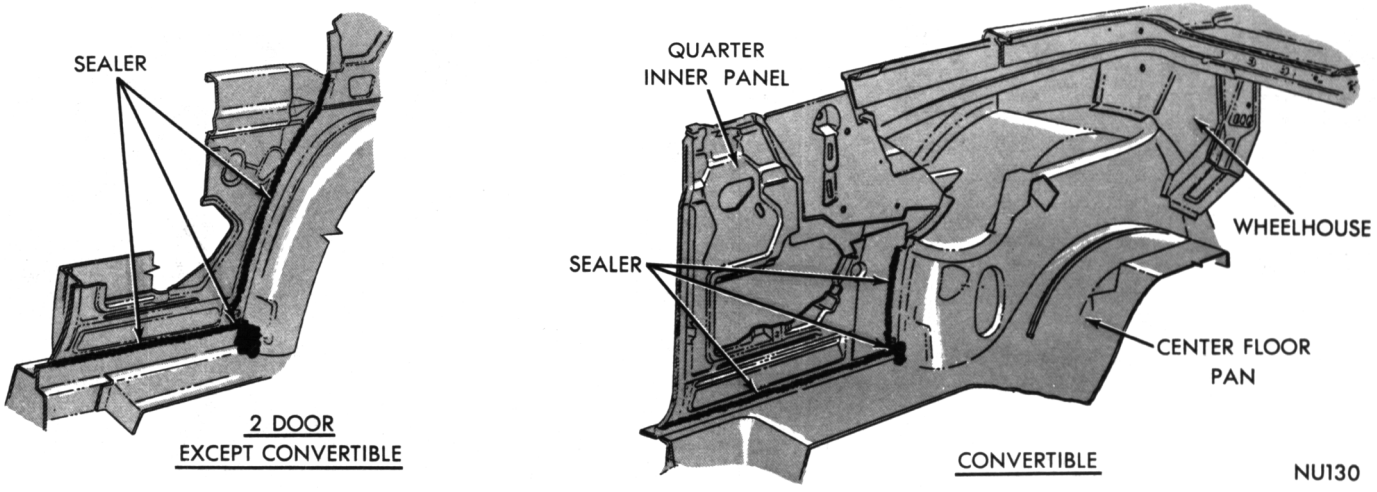

Quarter Inner Panels—Valiant-Barracuda

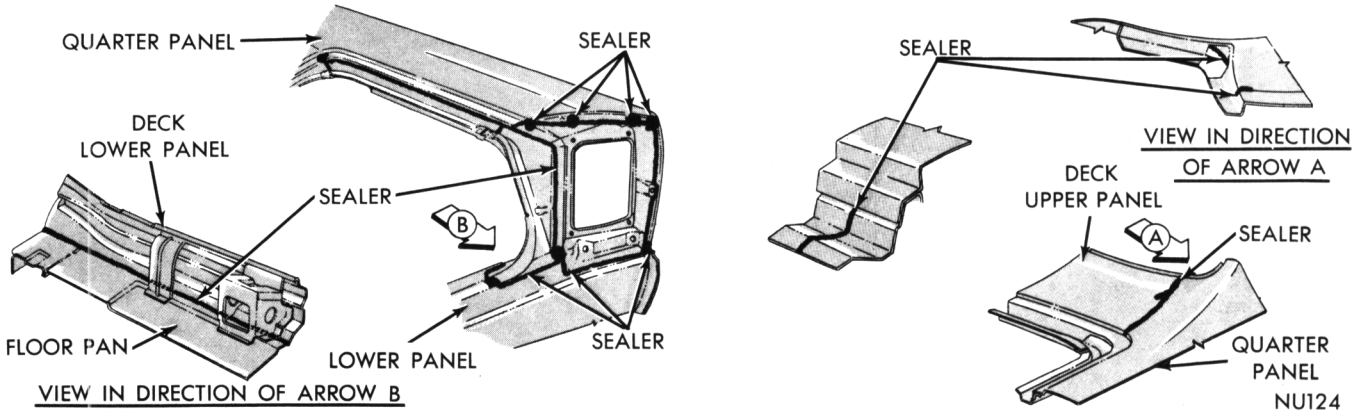

Deck Lid—Tail Light Areas—Satellite

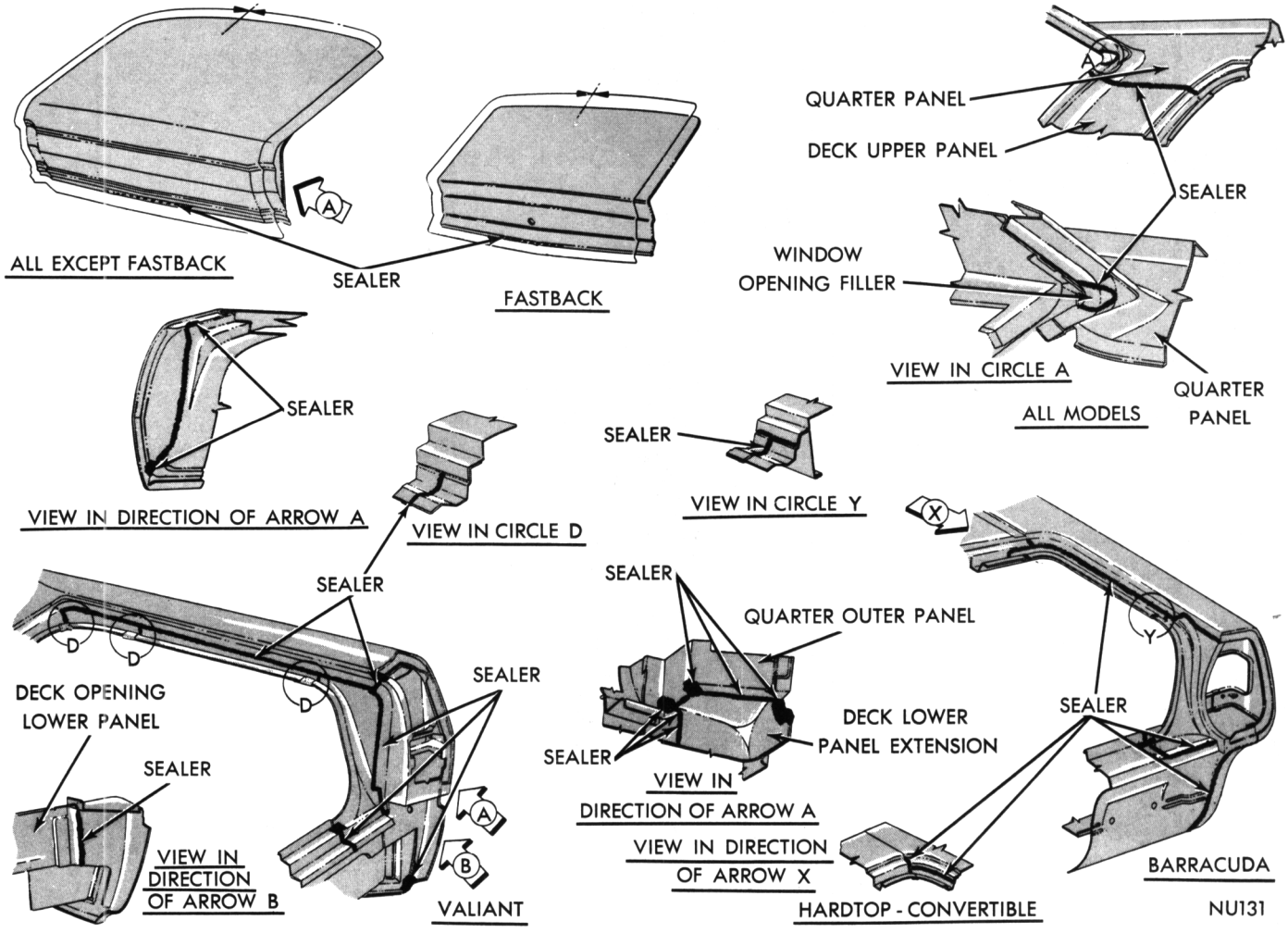

Deck and Tail Light Areas—Valiant-Barracuda

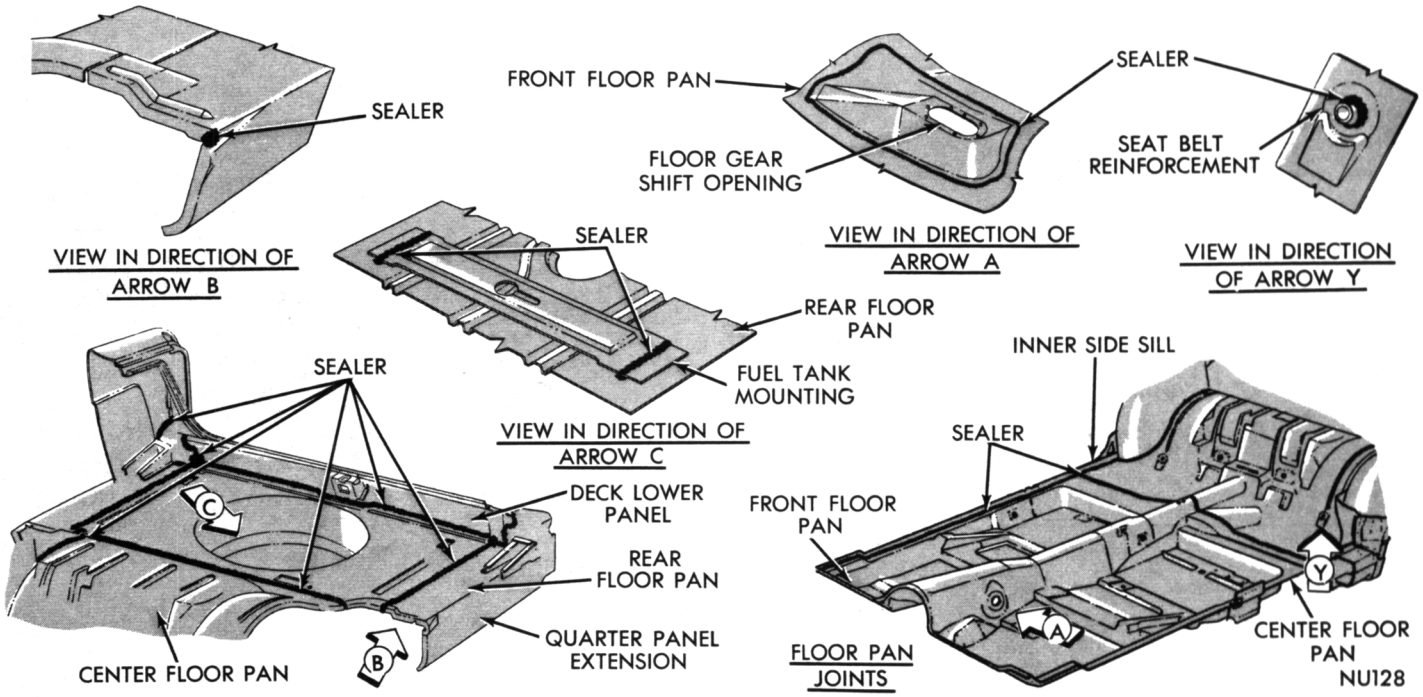

Floor Pan Areas—Valiant-Barracuda

VINYL ROOF COVERING

INDEX

	Page		Page
Air Bubble Removal	141	Cover Replacement	140

SERVICE PROCEDURES

COVER REPLACEMENT

Removal

(1) Remove windshield, rear window and mouldings. On cemented-in-type windows, remove mouldings only. To aid in installation of mouldings, mark clip hole locations with a removable type marker.

(2) Remove roof side mouldings and pull cover off of roof panel.

(3) Remove all sealer from drain trough, windshield and rear window reveals.

Installation

Inspect old cement to make certain there are no high or low areas, or areas without cement.

(1) Mask body (Fig. 1) from edge of drain trough across upper "A" pillar, windshield and rear window reveal, top of deck upper and bottom of roof panel at belt line.

(2) Locate and mark center line of roof panel and vinyl cover at front and rear ends.

(3) Apply a thin film of cement to center four inches of roof panel and vinyl cover.

(4) When cement becomes tacky, position cover on roof aligning centerline marks.

(5) Apply cement to one half of roof panel and extension and to the cover half on same side (Fig. 2).

(6) When the cement becomes tacky position cover on roof panel.

(7) Repeat steps 5 and 6 for the opposite side.

(8) Using a new paint roller, pressurize cover to the roof working from center area toward drain troughs.

(9) Press cover into windshield and rear window reveals using a dull pointed fiber tool (Fig. 3).

(10) Starting at top center, secure cover to wind-

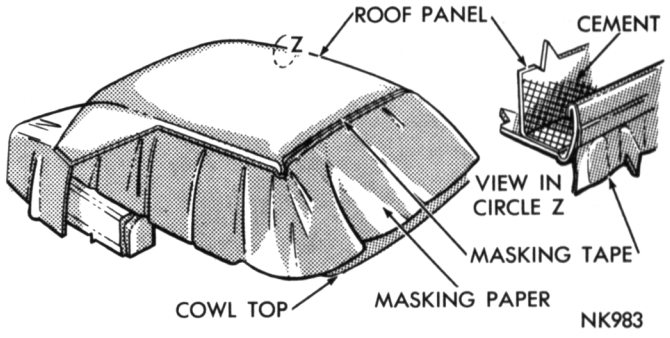

Fig. 1—Masking the Body

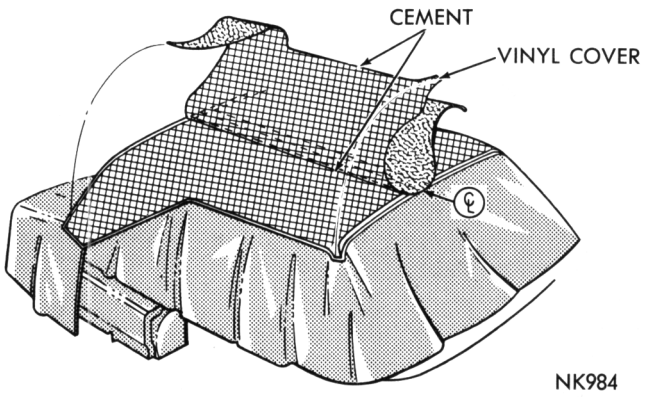

Fig. 2—Positioning Cover on Roof

shield reveal using staples spaced 1-1/2 inches apart (maximum) or tacks spaced 1/2 inch apart (Fig. 4).

(11) Position cover to roof panel extension making certain all wrinkles are removed.

(12) Starting at top center, secure cover to rear window reveal using staples spaced 1-1/2 inch apart (maximum) or tacks spaced 1/2 inch apart (Fig. 4).

(13) Trim fabric at base of windshield reveal, halfway between upper and lower edges of pillar moulding (Fig. 5).

(14) Trim fabric at base of rear window reveal.

(15) Using a dull pointed tool, press fabric into drain trough to achieve maximum contact of roof cover material to drain trough (Fig. 6).

(16) Grasp outboard edge of cover and while pulling material outward and down, use upper edge of drain trough flange as a breakover for draping material on to outboard drain trough flange face (Fig. 6). **Care must be taken to avoid pulling loose the cover material** applied to base of drain trough.

(17) Press material against drain trough flange face for full length of outboard sides of roof cover.

(18) Trim excess material hanging below drain trough flange about 1/8 inch above lower edge of flange (Fig. 6).

(19) Locate and drill index hole for front pillar moulding upper locating boss (Fig. 5) (original installation only).

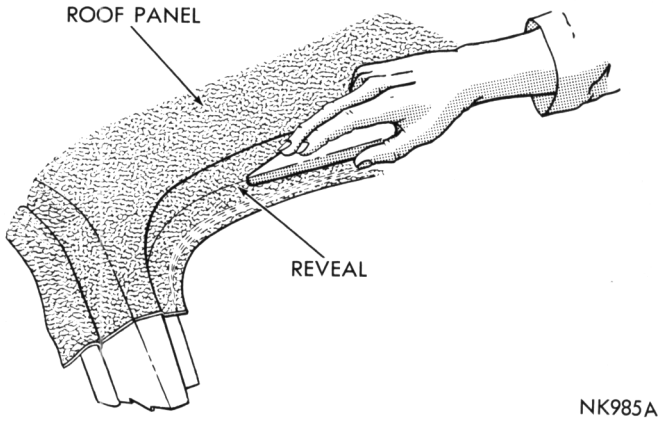

Fig. 3—Positioning Cover in Window Reveals

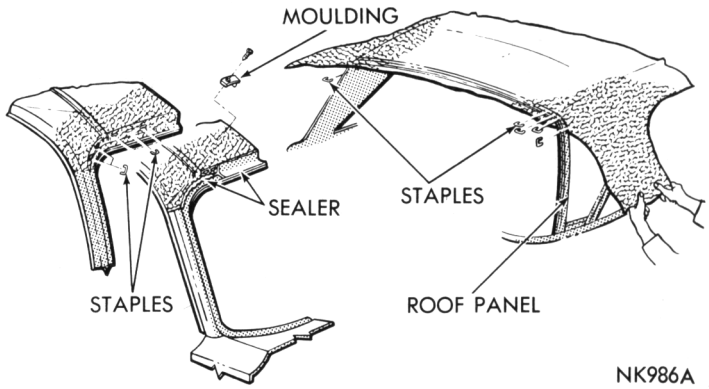

Fig. 4—Stapling Cover at Window Reveals

(20) Apply a bead of sealer to edge of cover and blend upward to form a seal over staples and cover edge. Extend sealer across trimmed edge on "A" post (Fig. 5).

(21) Locate and punch holes in cover at roof extension belt line.

(22) Trim cover on a line 1/4 inch below belt line moulding holes and curving upward to meet drain trough.

(23) Apply a bead of sealer to trimmed edge of cover at roof panel and smooth out to form a seal (Fig. 7).

Install sealer along entire length of outboard trimmed edges of cover material to seal exposed edge adjacent to drain trough flange.

(24) Apply a 1/4 inch ball of sealer to index studs of pillar mouldings.

(25) Position moulding by inserting a locating pin in index hole and align moulding.

(26) Using hole in moulding as a guide, drill a .120 diameter hole in pillar and fasten in place with a screw (original installation only).

(27) Install side drain trough mouldings, windshield and rear window mouldings.

(28) Remove masking material and inspect cover for air bubbles.

AIR BUBBLE REMOVAL

(1) Place strips of masking tape over surface of bubble.

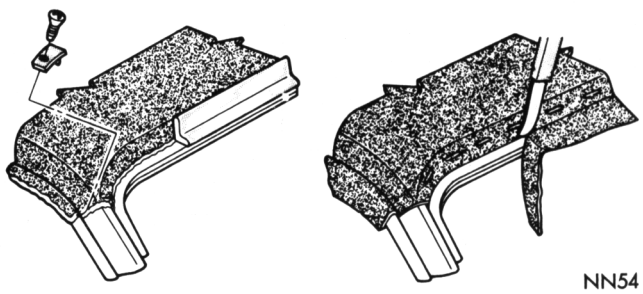

Fig. 5—Trimming and Sealing Cover at Windows

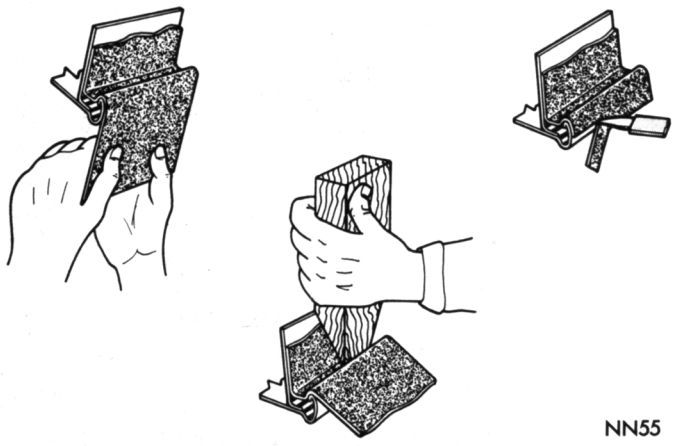

Fig. 6—Positioning Cover at Sides

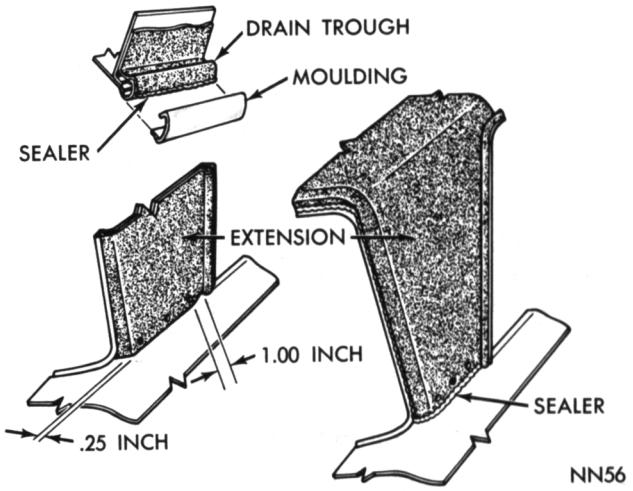

Fig. 7—Sealing Cover at Sides

(2) Using a No. 19 hypodermic needle and suitable syringe, insert 3M Vinyl Trim Adhesive No. 8064, or equivalent, into bubble area. **Extreme care must be used to avoid depositing any adhesive on the top surface of the vinyl cover.** The perforation must be made in center of bubble, through masking tape and vinyl material. Approximately 0.5 mil of adhesive per square inch should be used.

(3) Remove needle and work adhesive to cover affected area by pressing vinyl to roof carefully. This will also transfer some of adhesive to surface of vinyl cover.

(4) Allow cement to dry 5 minutes at room temperature.

(5) Heat bubble area with relative low heat (150°-160°F.) until bubble area begins to enlarge in circumference. Infra-red heat lamps provide a suitable source of heat.

(6) Remove heat source and allow cover to cool. A method of rapid cooling will be beneficial.

(7) Using a **DRY** No. 19 hypodermic needle, puncture cover 4 times equidistant around outer circumference of bubble to provide an escape route for entrapped solvent and air.

(8) After bubble collapses, press cover to metal surface, starting from one side of bubble and working toward opposite side until it conforms to metal surfaces and all raised surfaces disappear.

(9) Keep car from hot sunlight and other direct heat sources.

(10) Examine top after a 24 hour period.

WOOD GRAIN OVERLAY

INDEX

	Page
Application of Overlay	143
Inspection	144
Surface Preparation	142
Temperature	142
Wetting Solution	142

SERVICE PROCEDURES

SURFACE PREPARATION

The body surface to which the overlay will be applied must be free of grease, oil and other foreign material. Sand all areas to be covered with the overlay using No. 360 paper soaked in water or mineral spirits. The area to be sanded should be approximately 1/4 inch larger in all dimensions than the overlay, except when the overlay is turned at the door and other comparable areas. **All metal and/or paint nibs must be removed prior to application of overlay. Tack off all dust and dirt particles from the sanded areas.**

TEMPERATURE

The overlay is most easily handled when the air and application surface temperatures are between 70 and 90 degrees. For applications below 70 degrees, use heat lamps to warm the application surfaces.

WETTING SOLUTION

Thoroughly mix two to three level teaspoons of **mild powdered household detergent** per gallon of clean, warm (80 to 90 degree) water in a non-rusting type retainer.

APPLICATION OF OVERLAY (Figs. 1 and 2)

It is mandatory to remove the paper backing from the overlay and not the overlay from the backing, as possible stretching or tearing may result.

Cut overlay 1/2 inch larger than area to be covered and lay on a clean flat surface with the paper backing surface up. Hold overlay firmly and remove backing paper in a smooth 180 degree motion. Under hot, humid conditions, a slight jerking motion will aid in paper backing removal.

Thoroughly wet application surfaces of body and the adhesive surface of the overlay with the wetting solution and immediately apply overlay, grained side out, to the body. Adjust overlay so 1/2 inch of material shows beyond all edges and apply wetting solution to outer surface of overlay.

Flat Surfaces

Use a plastic squeegee having a cloth sleeve, or is teflon coated and pressurize all flat surfaces with firm, overlapping strokes to remove all air bubbles, water, wrinkles and to assure a good adhesive contact. On vertical surfaces, pressurize and level off entire top edge first with a 3 x 4 inch squeegee, then work from top to bottom.

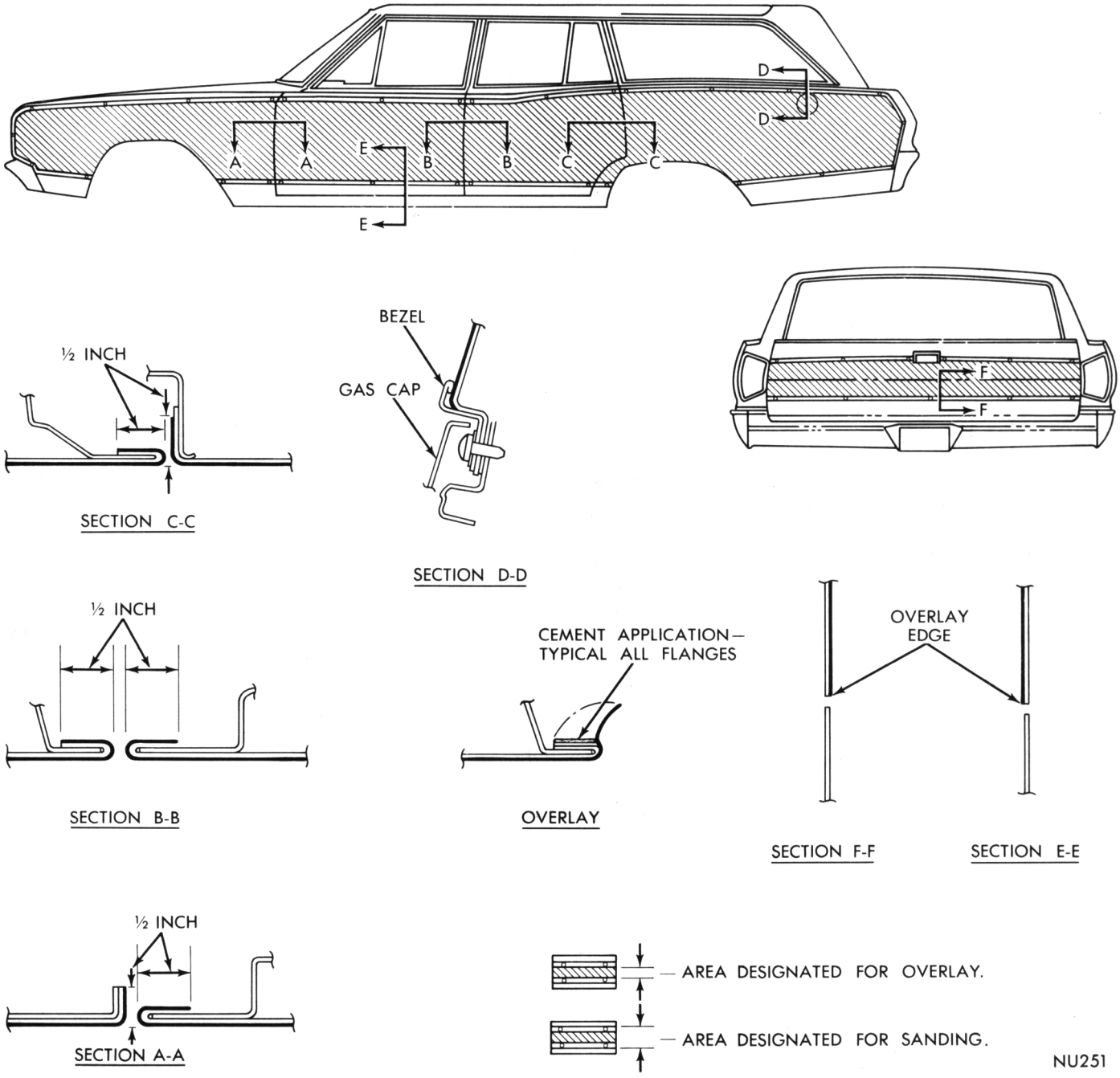

Fig. 1—Wood Grain Overlay Application—Satellite

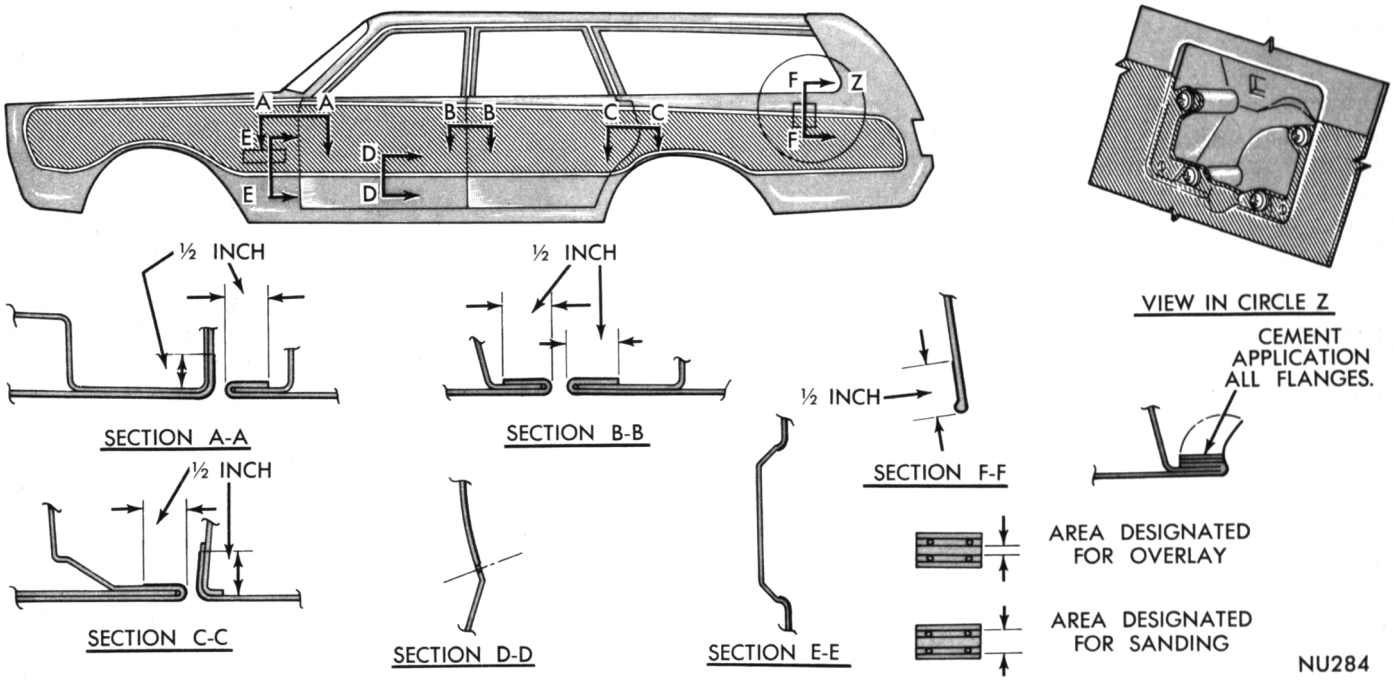

Fig. 2—Wood Grain Overlay Application—Fury

On horizontal surfaces, start at the center and work toward the edges using a 3 x 4 inch squeegee. **Do not apply pressure to edges that will be wrapped around doors, fenders, gas cap areas or to compound curve areas.**

Flange Areas

(1) After being sure all metal and/or paint nibs and sanding residue have been removed, hand brush 3M Vinyl Adhesive 8064 (Quart Size Only), or equivalent, to entire flange area with a smooth, even coverage.

(2) Warm the unapplied overlay with a heat lamp.

(3) **Avoid trapping air when turning the edge** and wrap overlay around flange area. Press firmly into position with the fingers, making sure overlay overlaps the flange.

(4) Using a single edge razor blade, trim off all material extending beyond flange.

(5) Pressurize flange area with a 2 inch rubber roller to be sure that overlay is well adhered to the painted metal surface.

Contoured Areas

(1) Warm the unapplied overlay with a heat lamp, working on an area no more than 1/2 inch larger than the squeegee.

(2) Using the 3 x 4 inch plastic squeegee, pressurize and level off the small warmed area.

(3) Repeat warming and pressurizing until entire contoured surface is completely adhered and free of air, water and wrinkles.

INSPECTION

Upon completion of an area, inspect for blisters due to trapped air or water. All blisters should be worked out with the squeegee, or punctured with a sharp needle or pin and then pressurized until the film adheres to the body surface. All edges must be adhered to the body surface.

BODY AND FRAME ALIGNMENT

INDEX

	Page
FORESTRUCTURE (STUB FRAME)	
Frame Dimensions (Fury Models)	144
Replacement	145
Body to Frame Alignment	146
BODY ALIGNMENT DIMENSIONS (Fury-Satellite-Valiant-Barracuda)	146

SERVICE PROCEDURES

FRAME DIMENSIONS—Fury Models

The various frame dimensions (Figs. 1, 2 and 3) may be used as a guide in measuring frame alignment. Diagonal measurements should be taken when straightening frame.

Measure distance between points connected by line "A", (Fig. 3). This distance should agree within 1/4

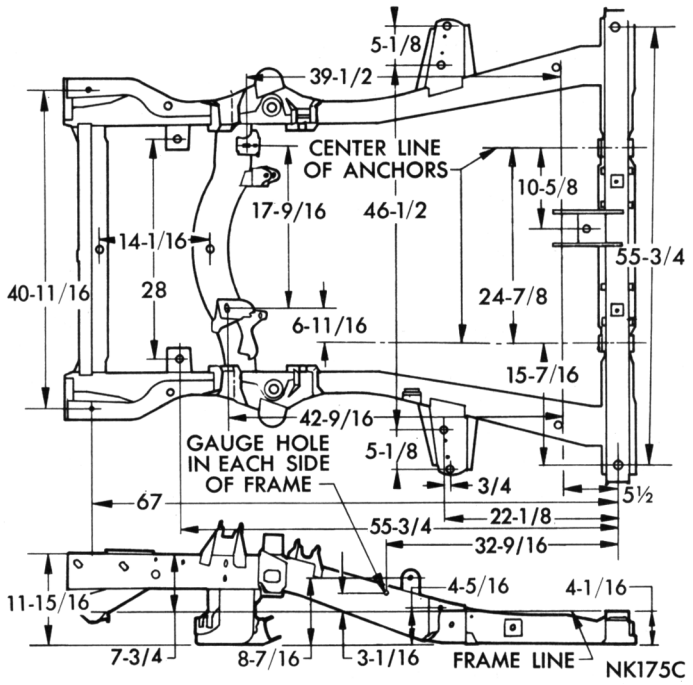

Fig. 1—Frame Dimensions—Fury 6-Cylinder

inch with distance between points connected by line "B".

The diagonals (Fig. 3) represent only one of the few that may be checked. **Care should be taken to make sure that any two diagonals compared represent exactly corresponding points on each side of the frame.**

Minor frame alignment can usually be corrected by straightening bent frame parts. A badly distorted frame can in most cases be replaced more economically than by attempting repairs.

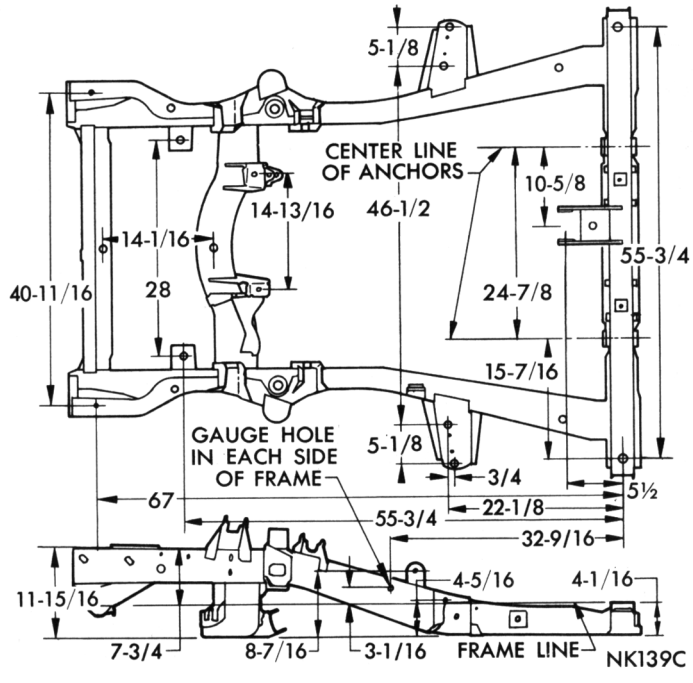

Fig. 2—Frame Dimensions—Fury 8-Cylinder

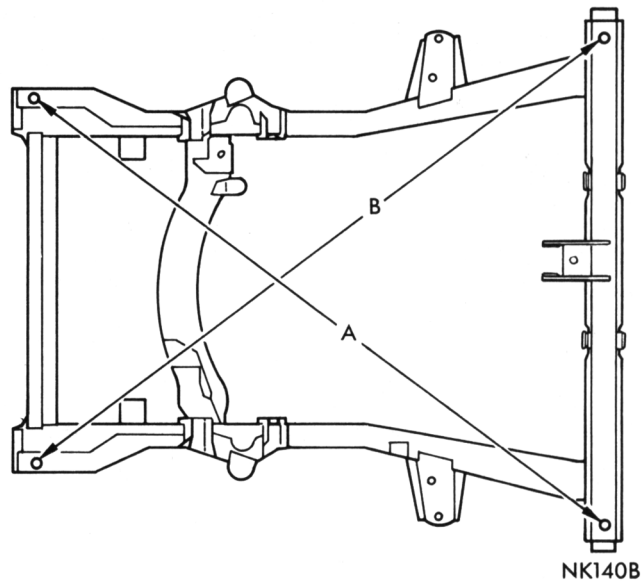

Fig. 3—Frame Diagonal Measurements

FRAME REPLACEMENT

The forestructure (stub-frame), engine, transmission, steering and suspension can be removed as an assembly for further disassembly out of the vehicle by two methods.

First method: remove hood and bumper, then remove fenders, wheel house panels, grille and radiator as an assembly, support vehicle at sill area and remove frame assembly.

Second method: support vehicle and lower frame assembly out of vehicle as follows:

(1) Remove battery and air cleaner, drain cooling system, remove radiator and shroud, disconnect heater hoses from engine, and disconnect battery tray from frame.

(2) Discharge air-conditioning system, (refer to "Group 24, Air-Conditioning" for discharging and charging the system), disconnect air-conditioning lines at firewall, discharge line at muffler and suction line at evaporator. **Seal open ends of air-conditioning fittings and connectors.**

(3) Disconnect throttle and speed control cables at carburetor, vacuum hose controlling accessories at engine manifold, remove or disconnect electrical wiring including engine to cowl ground strap.

(4) Remove roll pin from steering gear coupling, disconnect shift linkage, steering column floor pan and steering column from support bracket and move column up approximately 3 inches.

(5) Raise vehicle on twin post hoist, remove drive shaft, exhaust pipes, shift rod or clutch linkage at torque shaft, rear seat heater or air-conditioning clamps at side rail, wheel house bolts at frame side rails, radiator support brace, bumper assembly and hood lock vertical lower support.

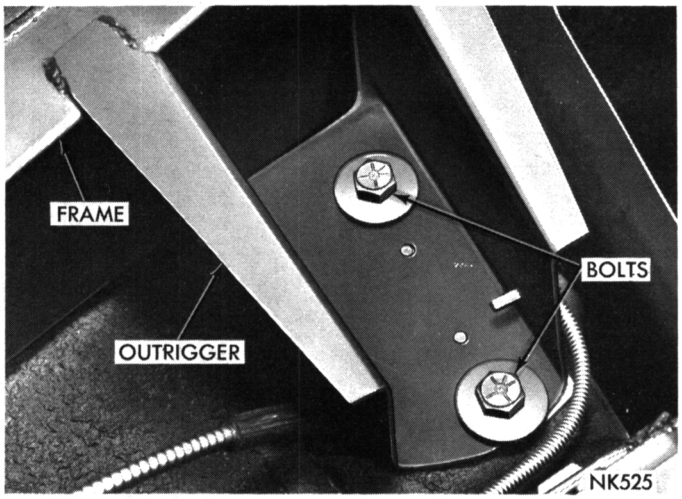

Fig. 4—Body to Outrigger Mounting

(6) Disconnect speedometer cable, electrical leads at starter, gas line at frame connection and plug line, emergency brake cable at rear cable attaching bracket and remove from rear frame crossmember.

(7) Support vehicle securely on stable floor stands (4,000 lbs. capacity) at rear of rear spring shackle boxes. At the front of vehicle place stands under body at rear of stub-frame at the side sill area, place a 4 x 4 inch x 7 foot wood beam across stands for extra strength and 2 x 4 x 6 inch pieces of wood on top of main support beam and to lower flat surface of the side sills. Then lower rear axle to lowest position to assist in balancing body weight when frame assembly is removed.

(8) Position a hydraulic transmission jack under the frame rear crossmember and remove the frame to body bolts (Fig. 4 and 5), and yoke to frame crossmember nuts and washers.

(9) Remove the frame assembly from the vehicle by lowering the front post and trasmission jack slowly at the same speed.

(10) If a twin post hoist is not available the vehicle can be supported on short stands about 36 inches high and using the same wood blocking with the use of floor jacks to support the transmission and suspension the stub-frame assembly removal can be accomplished.

(11) If frame is to be replaced transfer serviceable parts to new frame.

Installation

(1) With frame assembly raised into position guide frame rear crossmember into channel and studs and the front top edge of frame into slots in lower flange of the radiator support.

(2) Install body to frame bolts nuts and washers and tighten to 75 foot-pounds.

(3) Install nuts and washers on studs at radiator support lower flanges.

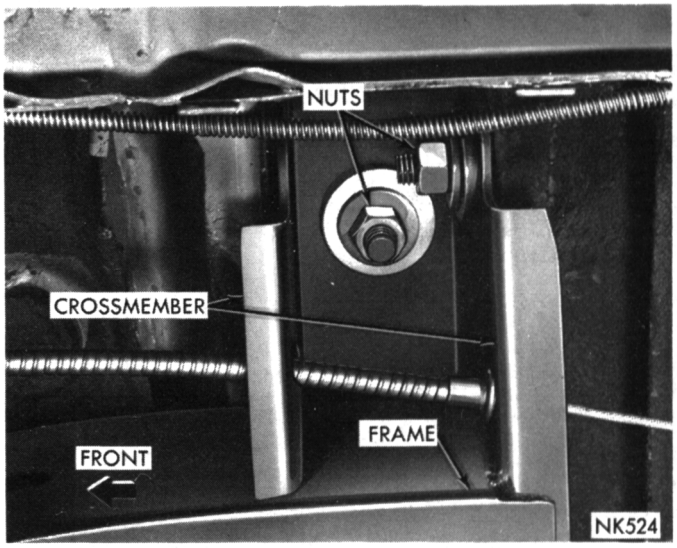

Fig. 5—Body to Crossmember Mounting

(4) Remove transmission jack and body support stands.

(5) Connect emergency brake cable, starter leads, gas line and speedometer cable.

(6) Install drive shaft, exhaust pipes, shift rod or clutch linkage at torque shaft, rear seat heater or air-conditioning piping clamps at side rails, wheel house and battery tray bolts at frame, radiator support brace, hood lock vertical lower support and bumper assembly.

(7) Lower vehicle, install and adjust steering column, accelerator and speed control cables.

(8) Install radiator and shroud, connect coolant lines, radiator and heater hoses, electrical wiring, vacuum and air conditioning lines.

(9) Install battery and air cleaner, fill cooling system and charge air-conditioning system.

Body To Frame Alignment

The body to frame alignment measurement should be performed whenever the stub frame has been removed, replaced or repaired. Use shims from original frame, when replacing frame, as a guide in accomplishing body to frame alignment.

Align front suspension and aim headlights after body to frame alignment has been completed. For body to frame alignment dimensions refer to "Body Alignment Dimensions (Fig. 1)". **Follow equipment manufacturers recommendations and procedures.**

BODY ALIGNMENT DIMENSIONS

(Fury—Satellite—Valiant—Barracuda)

Body alignment may be accurately measured by the following method. Elevate vehicle to a level position over a clean and smooth floor.

Refer to (Figs. 1, 2 and 3) and place the line of a plumb-bob on point "A" with the plumb-bob just contacting the floor. Mark the plumb-bob contact point

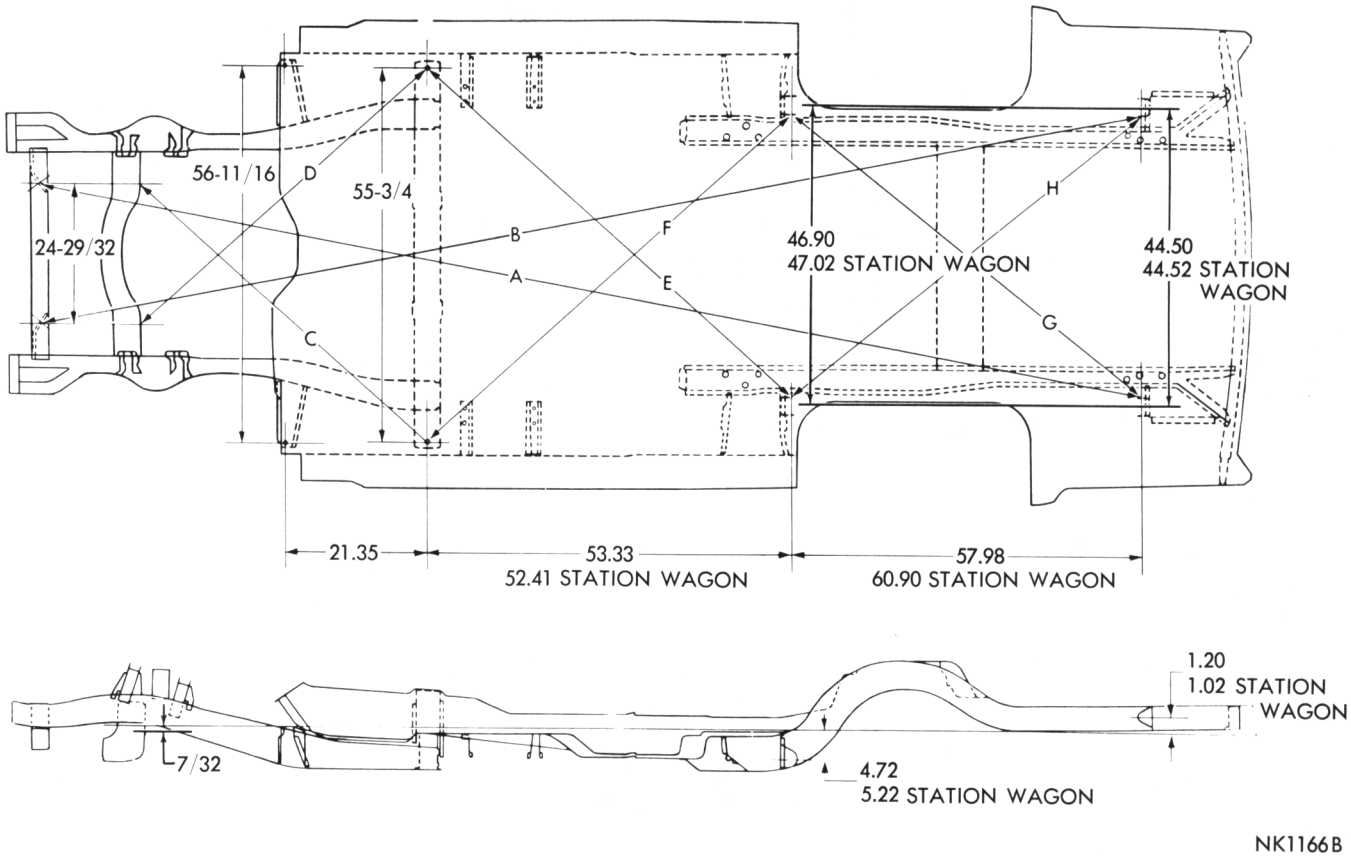

Fig. 1—Body Frame Dimensions—Fury

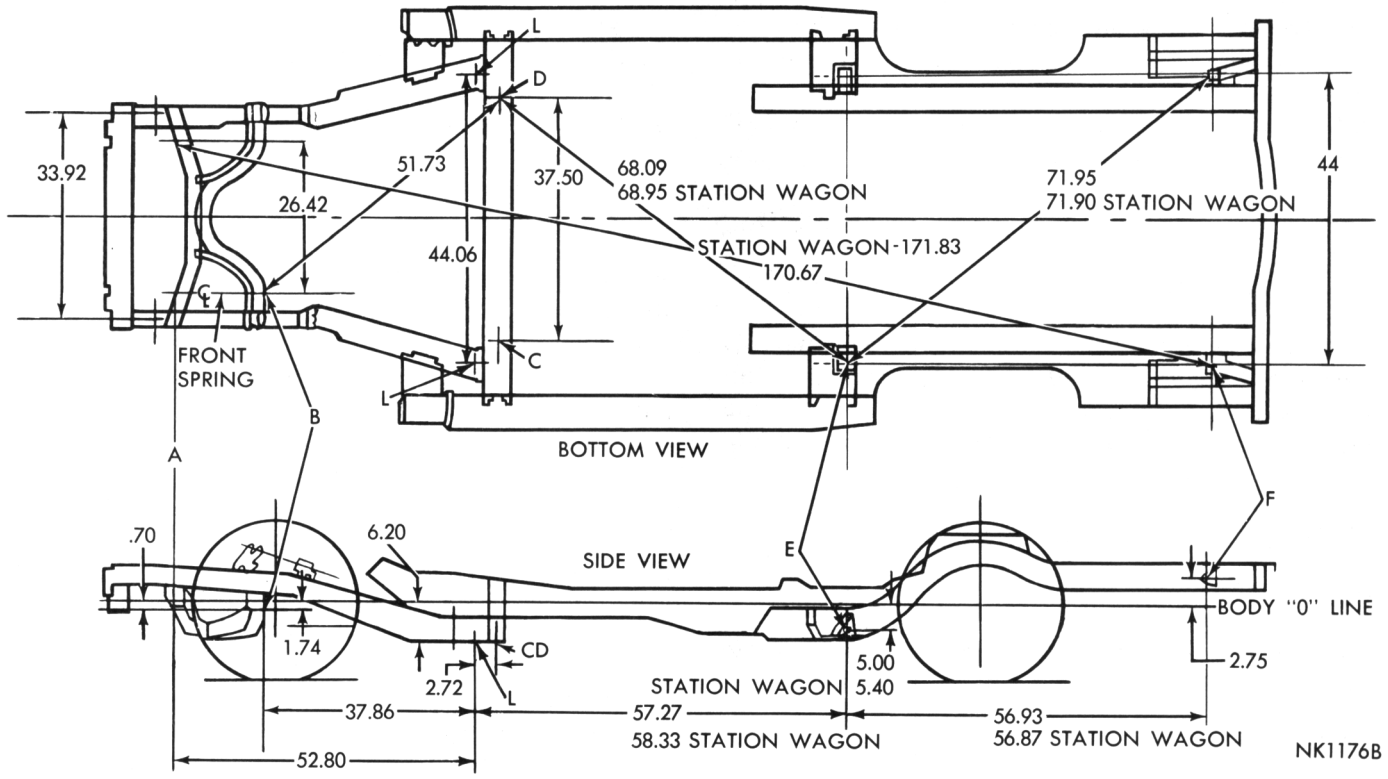

Fig. 2—Body Frame Dimensions—Satellite

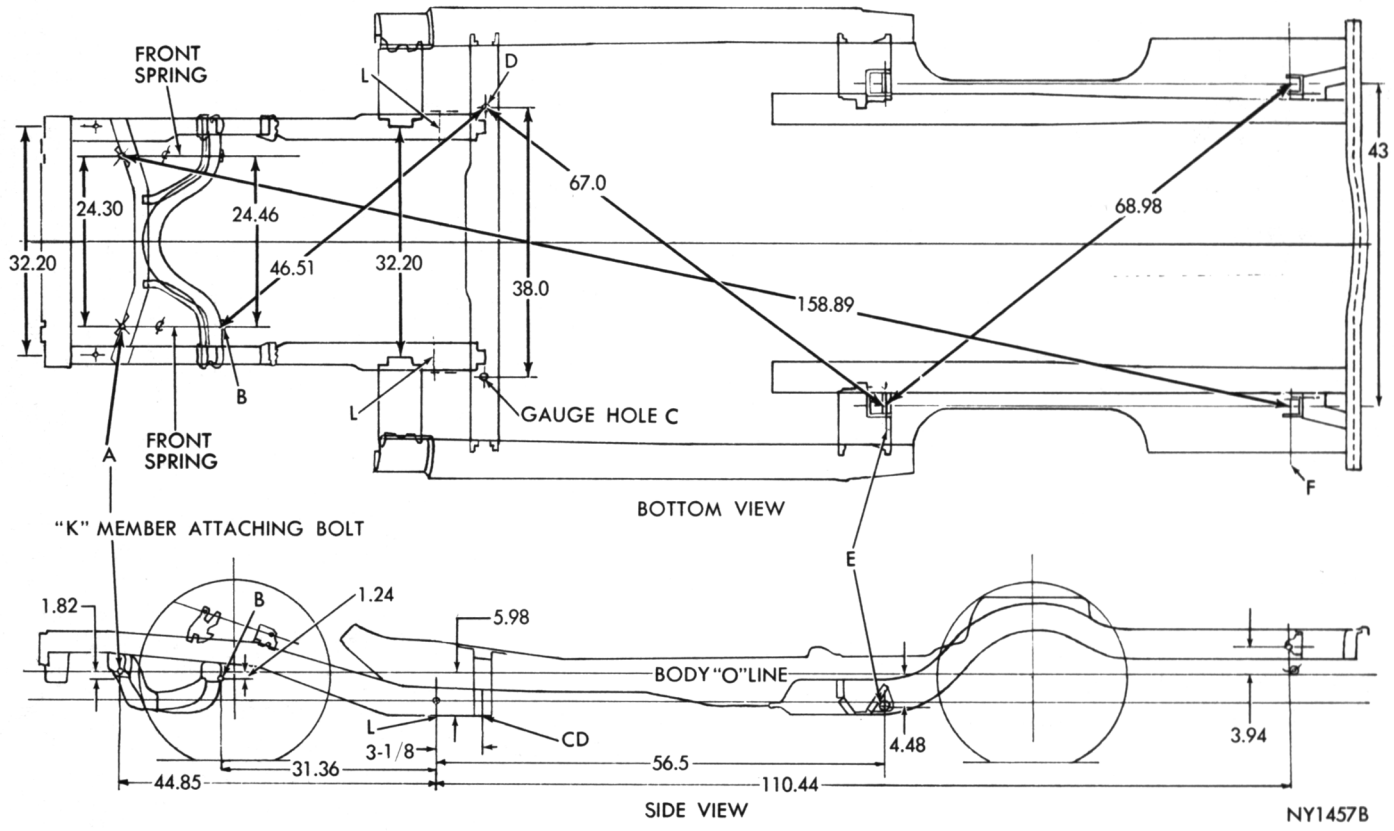

Fig. 3—Body Frame Dimensions—Valiant—Barracuda

on floor. Repeat process at points B, C, D, E and F on both sides of body. Snap a chalk line between points as illustrated. **Care should be taken that all diagonals compared represent the corresponding measuring points.**

Compare the dimensions with the specifications. All matching point to point dimensions should agree within 1/4 inch.

In making any body opening measurements, always compare the matching measurements of both sides of the vehicle. All dimensions must be measured at the welded joints of the body to insure uniform measurements.

REFINISHING PROCEDURES

ACRYLIC FINISHES

The vehicles are finished in an acrylic enamel. To determine the correct color and part number of the enamel used on the car, refer to the code on the body number plate and then locate the corresponding code on the paint chart.

DEFINITIONS OF TECHNICAL TERMS

COAT—SINGLE

This means one coat overlapping to give complete coverage.

COAT—DOUBLE

A double coat means to first spray a single coat with vertical strokes and then across with horizontal strokes, or vice versa.

DRYING

The drying or hardening of a film goes through several stages. The first is known as "dust-free" and is the time required for a film to reach the condition where, if any dust settles on it, the dust will not become imbedded, but may be wiped off after the film has hardened. The second stage is known as "tack-free" and is the time required for a film to reach the condition where it may be touched with light pressure of the finger. The third is "hard-dry" and is the time required for the film to become thoroughly hard so that it may be rubbed and polished.

FEATHER-EDGING

This is the tapering of the edges of a finish so that when the finger is passed over it no break will be felt. Feather-edging is usually done with water and sandpaper on a sanding block.

FERROUS AND NON-FERROUS METALS

Ferrous metals are those which are made from iron (steel). Non-ferrous metals are those which are not made from iron or do not present an iron (steel) surface, such as aluminum, aluminum alloys, brass, copper and magnesium.

FLASH

This is the term applied to a coat of a product when enough of the solvent has passed off for re-coating.

MIST COAT

This is a coat of thinner to which may be added a small amount of retarder and applied as a final coat to increase flow and lustre of lacquer-type finishes.

PRIMING

The function of a primer is to form a bond between the surface and the succeeding product.

PUTTYING

A glazing putty is used for filling in small imperfections which are too deep to be taken care of by surfacer coats. It may be applied either before or after the last coat of surfacer.

REDUCERS

Reducers are mixtures of volatile liquids used to reduce alkyd, synthetic and orthodox materials to the proper consistency for application.

SANDING BLOCK

As a rule a sanding block is a flexible rubber block, so arranged sandpaper may be fastened to it securely. It affords a good grip for the operator.

Wherever possible sanding should be done with a block as it distributes the pressures and gives a more uniform surface.

SURFACING

The function of a surfacer is to prepare a smooth surface for the color coats.

TACK RAG

This is a piece of cheesecloth that has been dipped in thin, non-drying varnish and then wrung out. It is kept in a container so that the varnish will not harden but will remain tacky. The tack rag is used to wipe off a surface or remove dust.

THINNERS

Thinners are mixtures of volatile liquids used to thin lacquer-type finishing materials to the proper consistency for application.

UNDERCOATS

All products used to prepare the surface to receive the color coats are classified as undercoats, such as primers, surfacers, putties, primer-surfacers and sealers.

PAINT REPAIRS ON GALVANIZED METALS

To perform paint repairs on galvanized rocker panels or any other galvanized steel surfaces, care must be exercised when preparing the bare galvanized surface to properly accept the primer-surfacer and finish paint. Do not use short cut methods or inter-mixing of materials.

Metal Preparation

(1) Thoroughly sand affected area to remove all corrosion products from exposed metal surface while carefully feathering all paint edges.

(2) Wire brush or steel wool entire metal surface and remove all grease or oil by wiping with a clean solvent.

(3) Treat bare metal panel with Galvaprep (Ditzler or DuPont) or R-M (Rinshed-Mason) 802 Galvanize and Zinc Conditioner or equivalent according to label directions.

(4) Rinse with clean water and blow off with compressed air.

Refinishing

(1) Apply one light coat of Ditzco Zinc Dust Primer DPE 659 (Ditzler) and as soon as thinner flashes off and within 30 minutes, apply a coat of Duracryl Sealer (Ditzler) or equivalent.

(2) Apply Ditzler A-L-E Primer Surfacer (DZL-3200 Light Gray, DZL-3400 Dark Gray, DZL-7200 Red Oxide) or Ditzco Speed-Sand Synthetic Primer Surfacers (DPS-70 Red Oxide, or DPS-30 Gray) DuPont Hi-Speed Primer-Surfacer, or Rinshed-Mason APS-403 Primer Surfacer Sealer or equivalent.

(3) Sand when dry and proceed with application of

finish coats according to paint manufacturers recommendations.

RUST PROTECTION

Prior to applying any paint to the sheet metal, clean the entire area to be repainted with a good wax and grease remover. **Eliminate all fingerprints.** Chemically treat all bare metal using a good metal conditioner. This conditions the exposed metal to resist rust.

BUFFING AND POLISHING

Minor imperfections in the paint finish normally can be removed by sanding, buffing and polishing. The following procedure should be used when working on these minor conditions:

(1) Oil sand by hand the affected area using #600 paper which has been soaked in mineral spirits. Caution should be used not to rub too hard over any of the affected areas or on ridges.

(2) Tack off the area with a clean soft cloth.

(2) Buff the entire area using a fine buffing compound.

(4) Polish the area with a good wax polish.

REFINISHING

Preparation Acrylic System— Over Old Acrylic

(1) Remove outside accessories, mouldings and bumper face bars (if necessary).

(2) Remove silicone polish, wax, or any other surface contamination with wax and grease remover. A chemically clean surface allows for effective sanding and assures adhesion of the undercoats and finish color.

(3) Sand old finish. This operation removes surface deterioration, feathers out scratches, nicks, stone bruises, or any other minor imperfections. Water sand with #360 grit paper or its equivalent.

(4) Blow off entire car, using high pressure air to eliminate dirt or dust from blowing out on to surface as paint is applied.

(5) Mask off areas not to be painted. If a complete color change is being made, mask off interior parts adjacent to door openings to prevent paint spray from soiling interior trim and upholstering.

(6) Reclean entire area to be painted with wax and grease remover, eliminating workman's fingerprints.

(7) Chemically treat bare metal. This conditions exposed metal to inhibit rust. Use a good metal conditioner.

Priming The Surface

This operation is the backbone or foundation for the finish color. It primes the metal to insure adhesion and fills minor surface imperfections. Use one of the recommended lacquer primer surfacers.

(8) Apply undercoats.

(9) To expedite repairs of other surface imperfections, use spot putty, glazing putty or all-purpose putty.

(10) Sand undercoats. Water sand with 400 or finer paper (or its equivalent if other sanding methods or systems are employed). This is the key operation in refinishing. The final finish will be as good as the foundation over which it is applied.

(11) Respray with primer surfacer any area that may have been sanded through to bare metal in step 10.

(12) Resand undercoat with 400 or finer paper.

(13) When color is being changed, wash door jambs and door opening areas. Spray interior.

(14) Remove overspray from exterior and reclean entire surface with wax and grease remover. This ensures positive adhesion.

(15) Tack rag entire surface to remove lint and dust.

(16) Apply acrylic color. (Four to six double coats.) Refinishing in the field must be done with acrylic lacquer. The acrylic lacquer can then be polished to match original finish gloss. Care must be exercised when selecting paint for refinishing Acrylic Metallics, to select the proper paint code. Acrylic metallics carrys a different code than non-acrylics.

(17) When color has dried hard, compound and polish.

SPOT REPAIRS

The procedures for making spot repairs with acrylic lacquer are the same as for complete panel refinishing with the following exceptions:

Sealer Coats

The use of a sealer is not practical where a spot repair is demanded, as it is difficult to spray sealer without leaving an edge. If care is taken in preparation of the surface, a satisfactory repair is possible by sanding the original finish about 2 or 3 inches beyond the area where the acrylic lacquer will be applied. Apply the lacquer directly on the sanded original finish, being careful not to overlap the color on the unsanded enamel.

APPLICATION OF COLOR COATS

Metallic color can appear to vary in richness. The variation can be described as:

A closed pattern that appears lighter with fine metallic dispersion.

An open pattern that appears richer with the metallic flakes less noticeable.

A closed pattern is best matched by reducing the DDL color 150% with DTL-135 Acrylic Thinner, or equivalent, adjusting the air pressure at the gun to 35 lbs. and applying medium wet coats.

An open pattern is achieved by lowering the air pressure to 20-30 lbs. **at the gun,** reducing the DDL color 100% with a blend of DTL-135 and DTX-1140 Retarder, or equivalent, and applying even wet coats. The blending of thinner and retarder can be varied in percentage as necessary depending on the room temperature.

Compounding Color Coats

Compound the sanded area that extends around the refinish lacquer and then compound the lacquer, blending it into the enamel. **The hard surface of the acrylic enamel will permit compounding without leaving scratches.**

PAINT CHARTS

EXTERIOR COLORS

VALIANT–BARRACUDA–SATELLITE–FURY

Paint Code	Color Name	Chrysler Code	Ditzler Code
A4	Silver Metallic	AY2EA4	2016
B3	Ice Blue Metallic	AY2EB3	2018
B5	Blue Fire Metallic	AY2EB5	2019
B7	Jamaica Blue Metallic	AY2EB7	2020
F3	Frost Green Metallic	AY2EF3	2023
F5	Limelight Metallic	AY2EF5	2024
F8	Ivy Green Metallic	AY2EF8	*43786
L1	Sandpebble Beige	AY1BL1	*22542
Q5	Seafoam Turquoise Metallic	AY2EQ5	*13534
R6	Scorch Red	AY1ER6	2029
T3	Honey Bronze Metallic	AY2ET3	2030
T5	Bronze Fire Metallic	AY2ET5	2031
T7	Saddle Bronze Metallic	AY2ET7	2032
W1	Alpine White	AY1EW1	2033
X9	Black Velvet	AY1TX9	*9300
Y2	Sunfire Yellow	AY1DY2	*81574
Y3	Yellow Gold	AY1DY3	*81575
Y4	Spanish Gold Metallic	AY2EY4	2034

*Carry-over color

ACCENT STRIP COLORS–LOWER BODY

VALIANT–SIGNET–BARRACUDA–SATELLITE

Color Name	Chrysler Code	Ditzler Code
White	AS1VW1	2033
Black	AS1TX9	9000
Brite Blue	AS1BB2	13074
Green	AS1EF3	43870
Brite Red	AS1BR5	71498

CORPORATE IDENTITY COLORS

Corporate White	8367
Corporate Blue	12785

Single Tone—X9-X9
Two Tone—X9-W1

First two digits are Accent or Roof Color.
Second two digits are Basic Body Color.
For special colors (coded 999) Furnish special order (SO) number and selling dealer with serial number of car.

Lower Deck Panel and Sill Area Argent Silver DX-8555

INTERIOR COLORS

VALIANT

EXTERIOR GLOSS FINISH COLORS

Used On: Door and Quarter Upper Inner Frames. Door and Quarter Upper and Lower Garnish Mouldings and "B" Pillars.

Color Name	Chrysler Code	Ditzler Code—DDL	Remarks
Black Velvet	AY1TX9	9300	
Medium Dark Blue Metallic	AY2EB7	2020	
Gold Metallic	AY2EY4	2034	
Light Bronze Metallic	AY2ET3	2030	
Dark Green Metallic	AY2EF8	43786	
Brite Red	AY1ER6	2029	

GLOSS FINISH COLORS

Used On: 2 Door Sedan Quarter Garnish Extension and Lock Pillar Upper. 4 Door Sedan "B" Pillar Cap.

		Ditzler Code—DIA	
Jewel Black	AB1TX9	9000	
Baltic Blue Metallic	AB2EB7	13697	
Golden Tan Metallic	AB2ET3	23086	
Giallo Gold Metallic	AB2EY4	23129	
Bayou Green Metallic	AB2EF8	43926	
Rally Red	AB1ER6	71685	

LOW GLOSS FINISH COLORS

Jewel Black	AB5TX9	9028	Front Seat Manual Adjuster Console.
Jewel Black (semi-gloss)	AB3TX9	9293	Optional for Front Seat Manual Adjuster.
Majesty Blue	AB5EB9	13686	Console Only.
Giallo Gold Metallic	AB6EY4	23074	Console Only.
Bayou Green Metallic	AB6EF8	43929	Console Only.

SUEDE FINISH COLORS

Used On: Instrument Panel. Glove Box Door. Ash Receiver. Steering Column Assembly and Bezel Rear Shelf Defogger.

Jewel Black	AC38VX9	9324
Baltic Blue Metallic	AC39EB7	13705
Laser Gold Metallic	AC39EY8	23062
Buckskin Tan	AC38ET8	23076
Bayou Green Metallic	AC39EF8	43925
Regatta Red	AC38ER8	71688

INTERIOR COLORS

BARRACUDA

EXTERIOR GLOSS FINISH COLORS

Used On: Integral Door Upper and Lower Garnish.
2 Door Hardtop Quarter Panel Lower Garnish.

		Ditzler Code—DDL
Black Velvet	AY1TX9	9000
Bright Blue Metallic	AY2EB5	2019
Light Bronze Metallic	AY2ET3	2030
Dark Green Metallic	AY2EF8	43786
Bright Red	AY1ER6	2029

GLOSS FINISH COLORS

Used On: 2 Door Hardtop Quarter Panel Upper Garnish Moulding.
Fastback Headlining Retainer Moulding.
Lower Wheelhouse Moulding. Rear Quarter Moulding.
Convertible Header and Defogger Intake Bezel.

Color Name	Chrysler Code	Ditzler Code—DIA	Remarks
Jewel Black	AB1TX9	9000	
Thunder Blue Metallic	AB2EB5	13693	
Golden Tan Metallic	AY2ET3	23086	
Bayou Green Metallic	AB2EF8	43926	
Rally Red	AB1ER6	71685	

LOW GLOSS FINISH COLORS

Jewel Black	AB5TX9	9028	Console only
Jewel Black (Semi-Gloss)	AB3TX9	9293	Optional for Front Seat Manual Adjuster
Majesty Blue	AB5EB9	13686	Console only
Buckskin Tan	AB5ET8	23061	Console only
Bayou Green Metallic	AB6EF8	43929	Console only
Rally Red	AB5ER6	71687	Console only

SUEDE FINISH COLORS

Used On: Instrument Panel. Glove Box Door. Ash Receiver and Steering Column Assembly.

Jewel Black	AC38VX9	9324
Baltic Blue Metallic	AC39EB7	13705
Sienna Tan	AC38ET8	23076
Bayou Green Metallic	AC39EF8	43925
Regatta Red	AC38ER8	71688

INTERIOR COLORS

SATELLITE

EXTERIOR GLOSS FINISH COLORS

Color Name	Chrysler Code	Ditzler Code—DDL	Remarks
White	AY1EW1	2033	Sill panel and tail gate garnish.
Black	AY1TX9	9300	Sill panel and tail
Medium Dark Blue Metallic	AY2EB7	2020	gate garnish.
Gold Metallic	AY2EY4	2034	Integral Door Garnish
Dark Bronze Metallic	AY2ET7	2032	Integral "B" Pillars.
Platinum Metallic	AY2EA4	2016	Integral Quarter Garnish.
Dark Green Metallic	AY2EF8	43786	Integral "B" Pillars.
Bright Red	AY1ER6	2029	Integral Quarter Garnish.

GLOSS FINISH COLORS

Used On: (a) Roof rail 2 Door Hardtop.
(b) Quarter upper garnish 2 Door Sedan and Hardtop. Quarter belt garnish 2 Door Hardtop.
(c) Station Wagon Rear Deck Seat Panel Assembly. Headliner Retainer Mouldings. "C" Pillar Cover and Quarter Window Garnish.
(d) Roof Bow Clips—Station Wagon.
(e) Convertible Rear Seat Shroud.

Color Name	Chrysler Code	Ditzler Code—DIA	Remarks
Aspen White	AB1VW1	8362	d
Dove White	AB1EW1	8743	a,b,e
Jewel Black	AB1TX9	9000	a,b,c,e,
Baltic Blue Metallic	AB2EB7	13697	a,b,c
Teak Tan Metallic	AB2ET7	23087	b,c,e
Saber Silver Metallic	AB2EA4	32722	b,c
Bayou Green Metallic	AB2EF8	43926	a,b,c
Rally Red	AB1ER6	71685	a,b

SEMI-GLOSS FINISH COLORS

Used On: (a) Backlite Moulding Clips (4 Door Sedan only)

Jewel Black (low gloss)	AB5TX9	9028	*Convertible Top Bow Assembly. *Front Seat Assembly Adjuster.
Jewel Black	AB3TX9	9293	Alternate for Adjuster.
Jewel Black	AB5TX9	9028	a
Baltic Blue Metallic	AB6EB7	13670	a
Desert Tan	AB5ET1	23079	a
Bayou Green Metallic	AB6EF8	43929	a

SUEDE FINISH COLORS

Used On: (a) Instrument Panel. Steering Column and Components. Windshield Garnish. Rear Window Defogger Bezel.
(b) Convertible Header and "A" Pillar.
(c) Glove Box Door—Inner.

Satin Black	AC38VX9	9324	a,b,c
Baltic Blue Metallic	AC39EB7	13705	a,b
Chestnut Tan Metallic	AC38ET8	23076	a,b
Bayou Green Metallic	AC39EF6	43925	a
Regatta Red	AC38ER8	71688	a

SPATTER FINISH

Three Tone Black and Gray	AC48CAA	DX-1768	Station Wagon 2nd. Seat Underside Plywood.

HEATERS AND AIR CONDITIONING

CONTENTS

	Page
HEATERS GENERAL INFORMATION	1
SERVICE DIAGNOSIS	1
SERVICE PROCEDURES	3
AIR CONDITIONER GENERAL INFORMATION	11
AIR CONDITIONER CONTROLS	14
AIR FLOW FOR EACH PUSH BUTTON POSITION	16
ELECTRICAL CONTROLS AND CIRCUITS	13-17
OPERATING INSTRUCTIONS FOR OWNERS	25
INSPECTION AND TEST PROCEDURES	13-18
SERVICE PROCEDURES	36
AUTO-TEMP FURY & VIP	67

HEATERS

INDEX

	Page
Valiant-Barracuda	
Assembly	9
Controls	(See Instrument Panels—Group 8)
Control Cable Adjustment	3
Disassembly	8
General Information	1
Installation	8
Satellite	
Blower Motor	7
Controls	(See Instrument Panels—Group 8)
Control Cable Adjustment	5
General Information	1
Heater Core	7
Heater Doors	8
Installation	5
Fury-V.I.P.	
Blower Motor	7
Blower Motor Resistor	8
Controls	(See Instrument Panels—Group 8)
Control Cable Adjustment	4
General Information	1
Heater Core	7
Heater Doors	8
Installation	6

GENERAL INFORMATION

All Plymouth models use a "Blend Air" type heater (Figs. 1, 2 and 3). Fresh air enters the heater through the cowl grille and passes through a plenum chamber to the heater core. A temperature control door in the heater housing directs the fresh air either through or past the heater core. The amount of "blend" is determined by the setting of the temperature lever on the instrument panel. Direction of the "blended air" is controlled by the "Heat-Defrost" lever on the instrument panel.

The blower switch determines the speed of the blower motor and the velocity of the air flow from the heater outlets.

On Valiant models, two fresh air ducts, for warm weather use, are located under each end of the instrument panel. By opening the doors on these ducts, fresh air bypasses the heater and is rammed into the vehicle (Fig. 4).

On all other Plymouth models, the ventilator doors are controlled by knobs mounted on the instrument panel. **Make sure these doors are closed during heater operation.**

SERVICE DIAGNOSIS

Condition	Possible Cause	Correction
INSUFFICIENT HEAT	(a) Carpet obstructing outlet.	(a) Reposition carpet to clear outlet.
	(b) Radiator hoses leaking.	(b) Correct leak. Replace hoses if necessary and bleed system of air.
	(c) Obstructed heater hose.	(c) Replace heater hoses.
	(d) Temperature door not closed or leaking.	(d) Adjust temperature control cable. See "Cable Adjustments."
	(e) Shut-off or defroster door improperly adjusted.	(e) Adjust the Heater-Defroster Control Cable. See "Cable Adjustments."

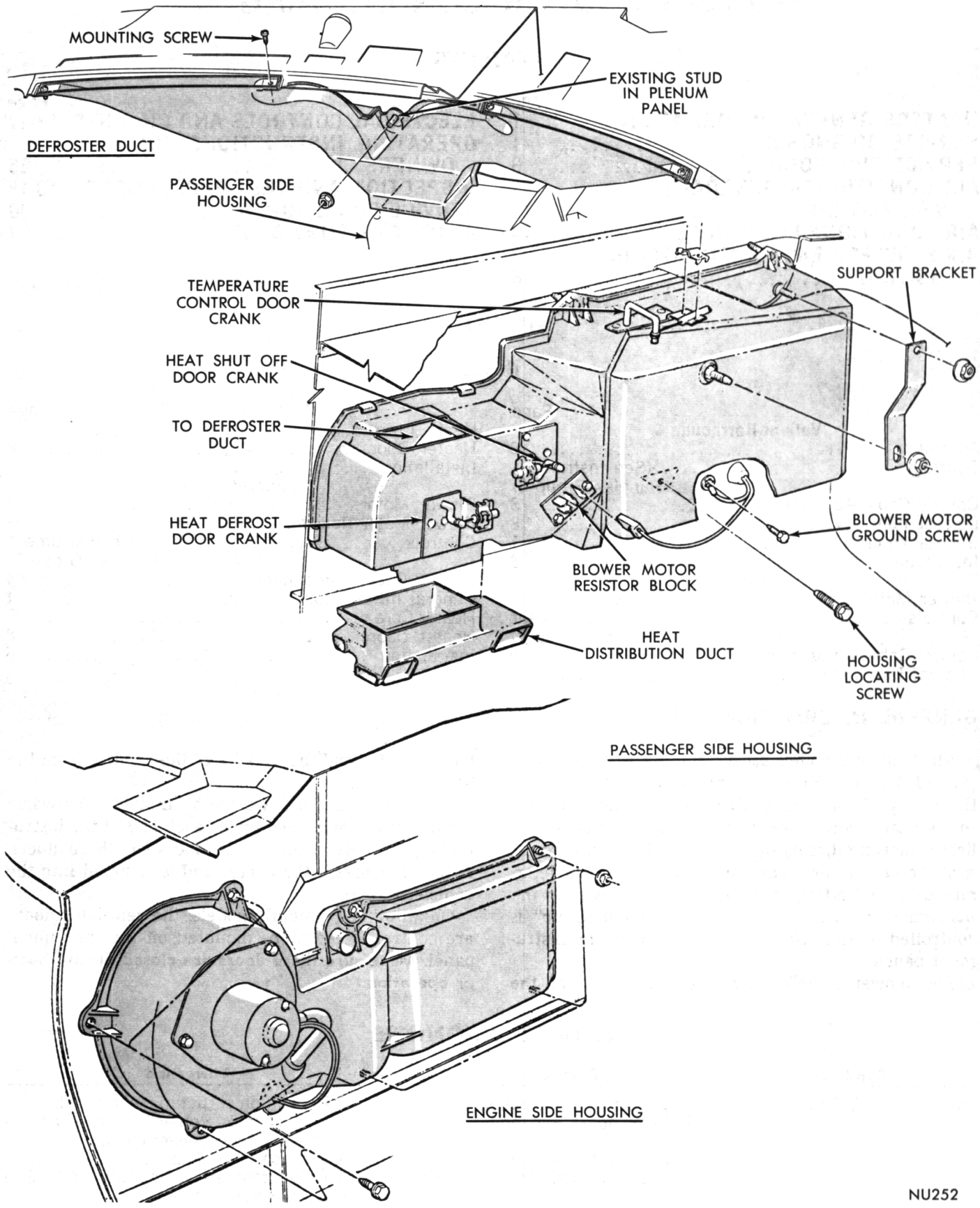

Fig. 1—Heater—Fury and V.I.P.

Condition	Possible Cause	Correction
	(f) Engine thermostat open.	(f) Replace thermostat. See Group 7, "Cooling System".
	(g) Coolant too low.	(g) Fill the radiator to recommended level.
TOO MUCH HEAT	(a) Disengaged cable on temperature door.	(a) Connect or replace cable.
	(b) Thermostat stuck in closed position.	(b) Replace thermostat. See Group 7, "Cooling System".
BLOWER MOTOR NOT OPERATING	(a) Blown fuse.	(a) Check for excessive resistance in circuit and replace fuse.
	(b) Faulty electrical connection.	(b) Tighten all electrical connections.
	(c) Faulty blower switch.	(c) Replace switch.
	(d) Faulty motor.	(d) Replace motor.
	(e) Faulty resistor.	(e) Replace resistor.

SERVICE PROCEDURES

HEATER CONTROL CABLE ADJUSTMENTS

To adjust heater control cables, the adjustment must be correct at the instrument panel control assembly first. It is necessary to remove the control assembly from the instrument panel to make these adjustments. See "Heater Controls" in "Instrument Panels," Group 8.

Valiant, Barracuda Models

(1) Disconnect the three cables at heater assembly.

(2) With control assembly removed from instrument panel, position the three control cables so the cable housing is flush with edge of the cable mounting bracket (Fig. 5). Install new clips.

(3) Install control assembly on instrument panel.

(4) Place top control lever in center or "Heat" position and connect heater defroster cable (right cable) to heater defroster door of heater assembly while holding door in extreme clockwise position.

(5) Connect fresh air cable (left cable) to air shut

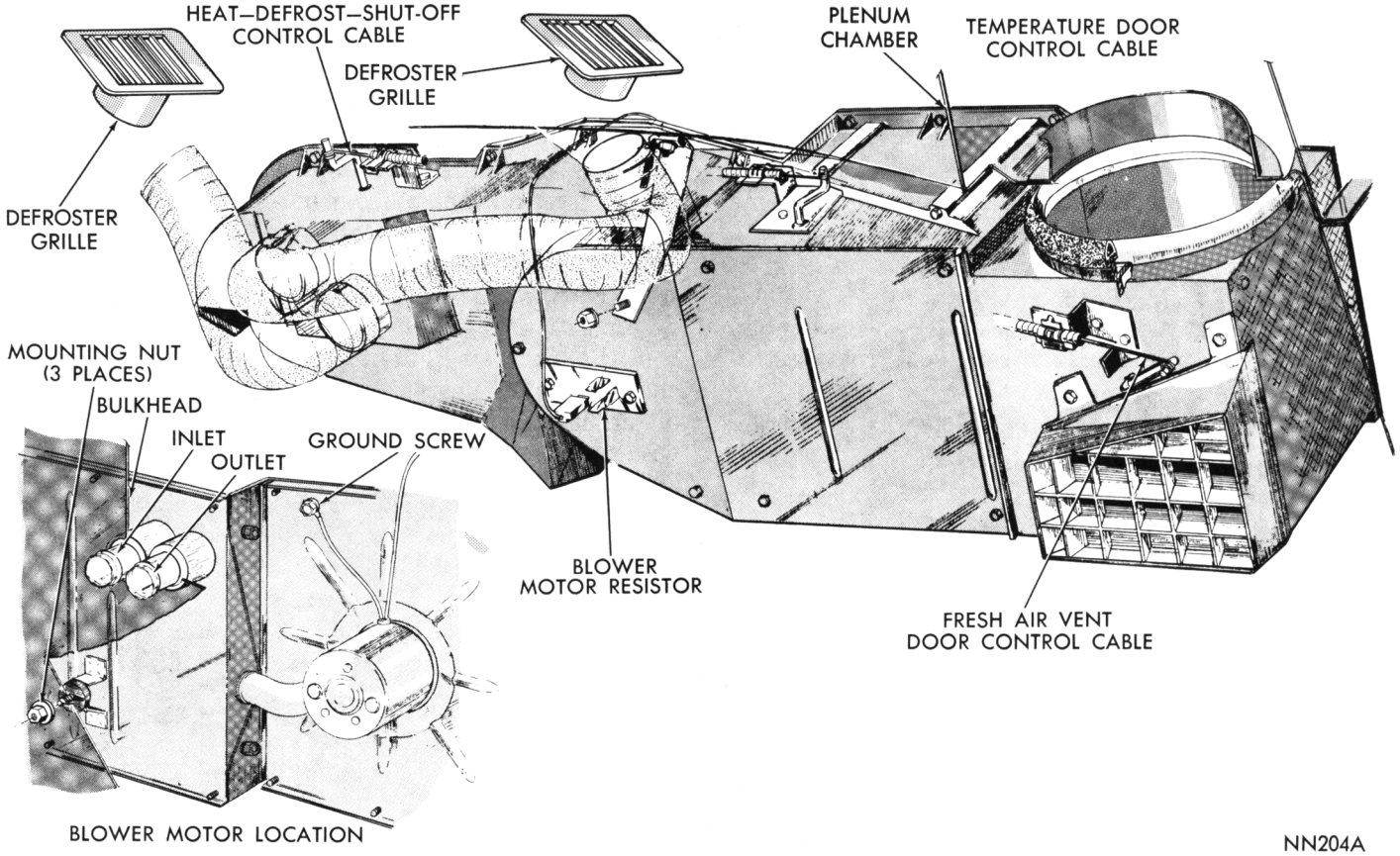

Fig. 2–Heaters–Satellite Models

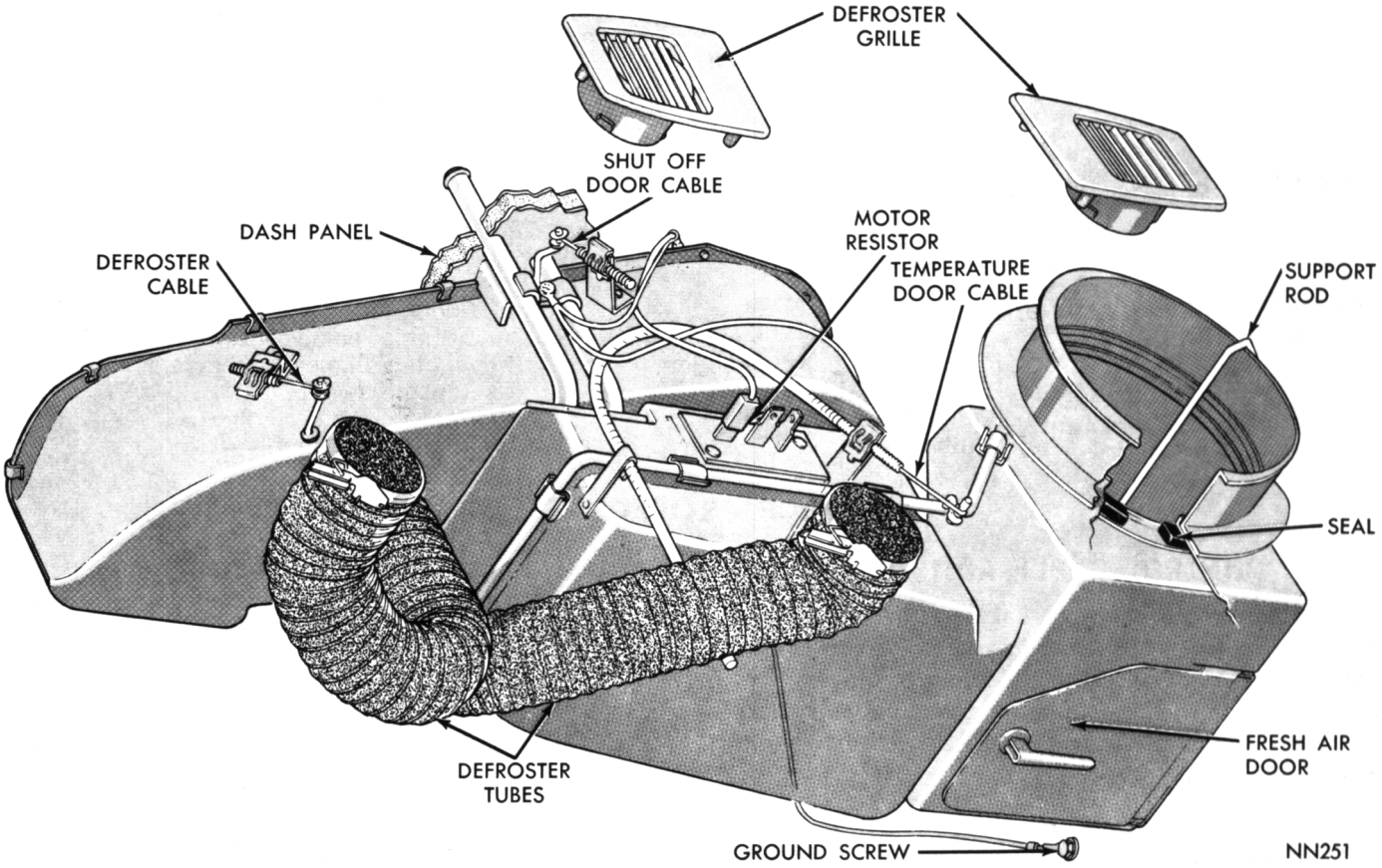

Fig. 3—Heater—Valiant and Barracuda

off door on heater assembly while holding door in extreme clockwise position.

(6) Place temperature control lever in extreme left, "Cool" position. Connect cable to right door of heater assembly while holding crank of door in extreme clockwise position.

Fury and V.I.P. Models

(1) Disconnect the three cables at heater assembly.

(2) With control assembly removed from instrument panel, position the three control cables so the cable housing is flush with edge of the cable mounting bracket (Fig. 5). Install cable mounting clips.

(3) Install control assembly on instrument panel.

(4) Place top control lever in center or "Heat" position and connect heater-defroster cable (left cable) to heat-defrost door (extreme left door) of heater assembly while holding crank in extreme counter clockwise position.

(5) Connect air shut-off cable (right cable) to air shut-off door of heater assembly (on the front surface of the heater), while holding crank in extreme clockwise position.

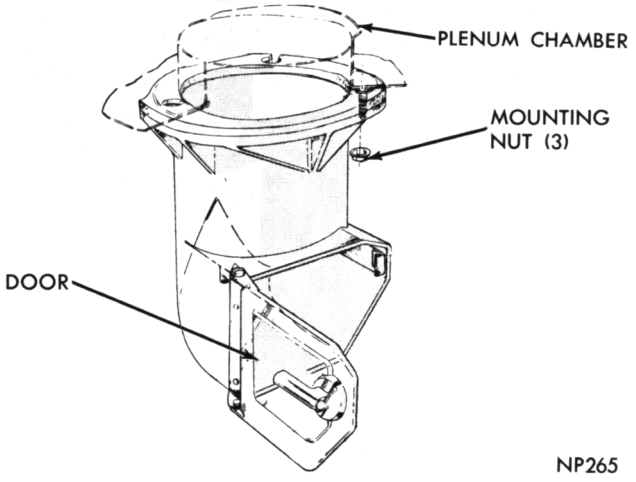

Fig. 4—Fresh Air Duct—Driver's Side

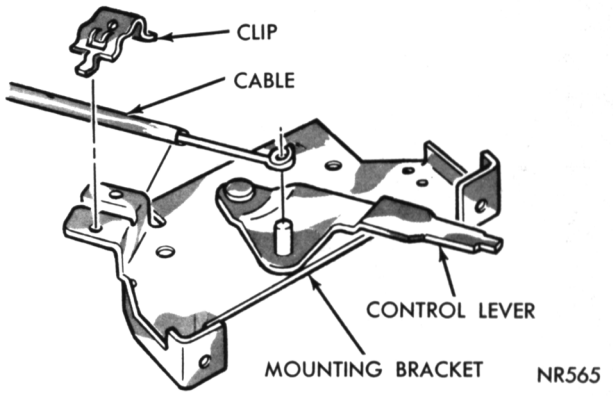

Fig. 5—Heater Control Cable Adjustment

(6) Place temperature control lever in extreme left, "Cool" position. Connect cable to right door of heater assembly while holding crank of door in extreme counterclockwise position.

Satellite Models

The Temperature control cable and the "Heat-Defrost" control cable should be positioned, at the control assembly, so that the ends of the cable housings are flush with the edge of the mounting plate. Final cable adjustments should be made at the heater ends of the cables.

To adjust the "Heat-Defrost" cable, place the control lever on the instrument panel in the defrost position. Remove the cable clip at the heat-defrost door and hold the door in full counterclockwise position. Attach clip. Be sure that the instrument panel control lever remains in the defrost position while installing the cable clip at the heater. Test the heater operation.

To adjust the "Temp" control cable, remove the cable clip at the temperature control door. Place the temperature control lever to the minimum heat position (closest to driver). Rotate the temperature control door shaft to the extreme clockwise position and reinstall the cable clip. Be sure the instrument panel control lever remains in the minimum heat position during this adjustment.

Fresh Air Vent Control Cable—Satellite Models

Push the fresh air control knob in (leave about 1/8 inch between knob and panel). Remove the control cable clip from the door control crank arm bracket. Rotate the crank arm of the door firmly to the closed position (left side counterclockwise; the right side clockwise) and reinstall the cable to the crank arm bracket.

Fresh Air Vent Control Cable—Fury and V.I.P. Models

(1) Push the fresh air control knob in (leave about 1/8 inch between the knob and panel).

(2) Remove the kick pad at the fresh air outlet.

(3) Remove the control cable clip from the vent door cable bracket.

(4) Rotate and hold the vent door firmly closed and attach cable clip.

(5) Reinstall kick pad.

HEATER—Satellite Models

On models equipped with console it is necessary to loosen and move the console rearward before removing the heater as follows:

(a) From inside console storage compartment remove, two console mounting bolts and two metal screws from the front sides in carpeting.

(b) Remove two shift indicator bezel screws, put gear selector in "Drive" position, pull bezel back and turn 90 degrees. Allow bezel to rest across top of console.

(c) Remove two mounting screws at rear of gear selector bracket, disconnect back up light switch connector and remove gear selector light bulb. Move console back. Heater may now be removed.

After heater is installed, the console is installed as follows:

(a) Align console to mounting brackets and install rear mounting bolts in console storage compartment, in rear of gear selector bracket and install two screws in front sides of console carpet.

(b) Connect back-up light switch wire and install gear selector light bulb.

(c) Install gear selector bezel by engaging front tabs under console housing lip and securing with the two metal screws at storage compartment end lip.

Removal

(1) Drain radiator and disconnect battery ground cable.

(2) Remove upper half of glove box.

(3) In engine compartment, disconnect heater hoses at bulkhead. Plug hose fittings on heater to prevent any coolant from spilling on interior trim as heater assembly is removed.

(4) From under instrument panel, remove heater to cowl support bracket.

(5) Remove defroster hoses and disconnect wiring from heater motor resistor.

(6) Disconnect fresh air vent control and shut-off door cables at heater from under instrument panel. Reaching through glove box, disconnect temperature control door cable.

(7) From inside engine compartment, remove three nuts that mount heater to bulkhead.

(8) Rotate heater assembly until mounting studs are up and carefully remove heater from under instrument panel.

Installation

(1) Position heater assembly under instrument panel (mounting studs up) and connect temperature control door and defroster door cables. See "Control Cable Adjustments."

(2) Rotate heater into position on bulkhead and support heater housing with a suitable block of wood.

(3) From inside engine compartment, install retaining nuts.

(4) Install heater hoses (Figs. 6, 7 and 8).

(5) Under instrument panel, install heater to cowl support bracket.

(6) Connect and adjust fresh air control and shut-

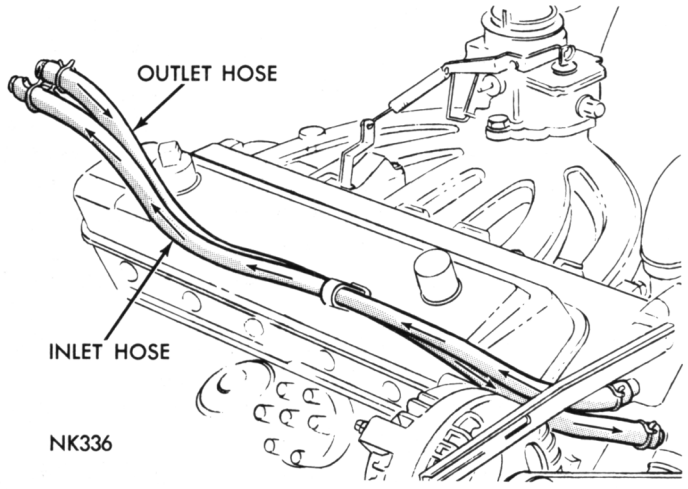

Fig. 6—Heater Hose Connections—225 Cu. In. Engine—All Models

off door cable at heater from under instrument panel. Connect temperature control door cable by reaching through glove box opening. See "Control Cable Adjustments."

(7) Connect defroster hoses and wiring to heater blower motor resistor.

(8) Refill cooling system and connect battery ground cable.

(9) Install upper half of glove box.

(10) Start engine, bleed system, inspect for leaks and test operation of heater.

Fury and V.I.P. Models
Passenger Side Housing

Removal

(1) Disconnect battery negative cable and drain radiator.

(2) In engine compartment disconnect heater hoses at dash panel. Plug hose fittings on heater to prevent any coolant from spilling on inside of vehicle as heater assembly is removed.

(3) Slide front seat back to allow room to remove unit from vehicle and unplug antenna lead from side of radio.

(4) Remove vacuum hoses from trunk lock if so equipped.

(5) Disconnect electrical connectors from blower motor resistor block on face of housing.

(6) Remove control cables from defroster door crank and heat shut off door crank.

(7) Remove bottom retaining nut from support bracket and swing bracket up out of the way.

(8) In engine compartment remove four retaining nuts from studs on engine side housing.

(9) Remove locating bolt from bottom center of passenger side housing.

(10) Roll or tip housing out from under instrument panel.

(11) Remove temperature control cable retaining clip and cable from heat shut off door crank.

Installation

NOTE: Before pressing housing to dash panel, be sure housing to panel seal is not misaligned or damaged.

(1) Position housing on front floor of vehicle under instrument panel and place temperature control cable in bracket. Place end of cable housing flush with end of bracket and install retaining clip.

(2) Tip housing up under instrument panel and press mounting studs through dash panel.

(3) While holding housing in position, install locating screw. Then swing mounting bracket down onto stud on face of housing and install mounting nut.

(4) In engine compartment install four retaining nuts and tighten securely. (24 inch pounds)

(5) Connect electrical connectors to resistor block and connect control cables to defroster door crank and heat shut off door crank.

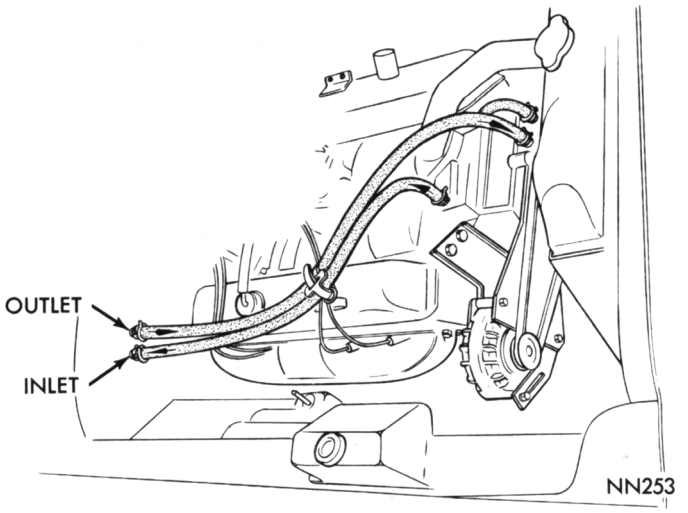

Fig. 7—Heater Hose Connections—272—318 Cu. In. Engines—All Models

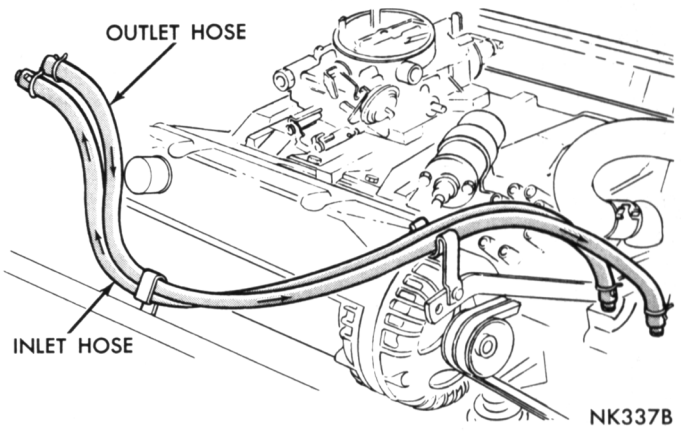

Fig. 8—Heater Hose Connections—383 and 440 Cu. In. Engines—All Models

(6) Plug antenna lead into radio and connect vacuum trunk lock hoses if so equipped.
(7) From engine compartment, remove plugs from core tubes and connect hoses to heater.
(8) Fill cooling system and connect battery negative cable.
(9) Start engine, operate heater and bleed air from system.

Engine Side Housing

Removal

NOTE: The right inner fender shield must be removed from vehicle to service heater blower motor or engine side housing. See Group 23 "Body and Frame" of this service manual for detailed illustrations of fender shield removal.

(1) Drain radiator and disconnect battery ground cable.
(2) Disconnect heater hoses at core tubes.
(3) Remove inner fender shield. (See note).
(4) From under instrument panel, disconnect blower motor feed and ground wires. Push wires and rubber grommet through dash panel into engine compartment.
(5) From engine compartment remove four retaining nuts and three screws from outer edge of housing and remove housing.

Installation

NOTE: Before pressing housing to dash panel, be sure housing to panel seal is not misaligned or damaged.

(1) Position housing on four studs on dash panel. Install four retaining nuts and three screws. Tighten securely.
(2) Push blower motor feed and ground wires through hole in dash panel and secure rubber grommet.
(3) From under instrument panel connect feed and ground wires.
(4) Install inner fender shield, connect heater hoses to core tubes.
(5) Fill cooling system and connect battery negative cable.
(6) Start engine, operate heater and bleed air from system.

BLOWER MOTOR—Fury and V.I.P. Models

The blower motor is mounted to the engine side housing under the right front fender between the inner fender shield and the fender. The inner fender shield must be removed to service either the blower motor ar engine side housing. See group 23 "Body and Frame" of this manual for detailed illustrations.

BLOWER MOTOR—Satellite Models

Removal

(1) Remove heater as outlined in "Heater Removal."
(2) Disconnect wiring from blower motor to heater assembly.
(3) Remove motor cooler tube.
(4) Remove heater backplate assembly from heater.
(5) Remove fan from motor shaft.
(6) Remove blower motor from backplate.

Installation

(1) Install blower motor on backplate.
(2) Install fan on motor shaft. Adjust for clearance between motor and fan.
(3) Install motor cooler tube.
(4) Install motor and backplate on heater.
(5) Connect blower motor feed wire.
(6) Install heater assembly as outlined in "Heater Installation".

HEATER CORE—Fury and V.I.P. Models

Removal

(1) Remove passenger side housing from vehicle. (See Passenger Side Housing Removal).
(2) From inside housing, remove two retaining nuts from right side of heater core and four screws from outside of housing.
(3) Remove core tube locating metal screw from top of housing.
(4) Carefully pull heater core out of housing.

Installation

NOTE: Examine core to housing seal for damage or misalignment before seating heater core in housing.

(1) Position core on studs in housing and install two retaining nuts.
(2) Install four core retaining screws from outside of housing and one core tube locating screw in top left of housing. Tighten all nuts and screws securely.
(3) Install housing under instrument panel. (See Passenger Side Housing Installation).

HEATER CORE—Satellite Models

Removal

(1) Remove heater as outlined in "Heater Removal."
(2) Remove heater cover to expose heater core.
(3) Remove screws that mount core to heater assembly and remove core.

Installation

(1) Position core in heater assembly and install core mounting screws.
(2) Install heater cover.

(3) Install heater as outlined in "Heater Installation."
(4) Install motor cooler tube.
(5) Connect wiring from heater assembly to motor.

HEATER—Valiant and Barracuda Models

Removal

To service the heater core or blower motor, it is necessary to remove the heater assembly from the vehicle.

(1) Disconnect battery ground cable and drain radiator.
(2) Disconnect heater hoses from heater and remove heater hoses at dash panel seal and retainer plate (Fig. 9).
(3) Disconnect wires from blower motor resistor (Fig. 3).
(4) Remove heater motor seal retainer plate and seal from dash panel (Fig. 9).
(5) Disconnect heater and defroster coutrol cables from heater assembly (Fig. 3).
(6) Remove defroster tubes from heater assembly.
(7) Disconnect heater housing support rod from fresh air duct (Fig. 3).
(8) Remove heater assembly.

Installation

(1) Position heater assembly on dash panel by sliding four mounting studs into their respective holes in dash panel.
(2) Connect and adjust heater-defroster cable and temperature control cables to their respective control arms.
(3) In engine compartment side, install heater to dash panel seal, seal retainer and mounting nuts.
(4) Position seal and seal retainer over heater tubes and install attaching screws.

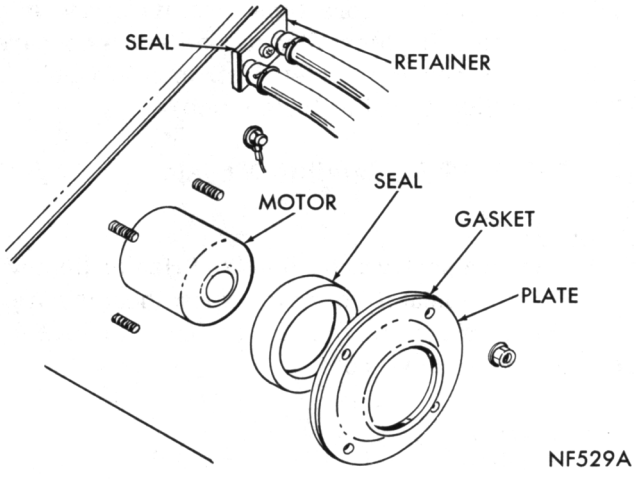

Fig. 9—Heater Mounting—Valiant and Barracuda Models

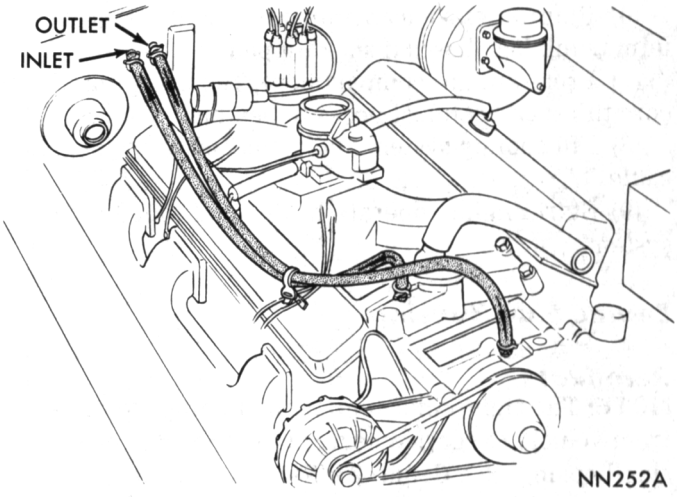

Fig. 10—Heater Hose Connections—273 Cu. In. Engines—Valiant and Barracuda Models

(5) Connect heater hoses to heaters (Fig. 10).
(6) On passenger compartment side, connect heater support rod to heater housing.
(7) Connect wire to heater motor resistor.
(8) Connect defroster tubes to heater.
(9) Fill cooling system, start engine and operate until normal engine operating temperature is obtained.
(10) Test operation of heater assembly.

Blower Motor Resistor Replacement—Satellite, Fury and V.I.P. Models

(1) From under instrument panel disconnect wiring to resistor.
(2) Remove the two screws that mount resistor assembly to heater and remove resistor.
(3) Position new or repaired resistor in heater and install the two mounting screws.
(4) Connect wiring to resistor assembly.

Heater Door Service—Satellite, Fury and V.I.P. Models

To service the heater fresh air door, heater regulator door or the heater defroster door, the heater must be removed from the vehicle and dissassembled. Refer to the "Heater Core" and "Blower Motor" Removal and Installation.

Disassembly—Valiant and Barracuda Models

(1) Remove heater as outlined in "Heater Removal." Remove seal from around heater motor mounting studs.
(2) Remove spring clips holding spacers and heater motor to heater housing.
(3) Remove fan from heater motor.
(4) Remove mounting support plate from heater motor.
(5) Remove heater motor resistor assembly from heater housing (Fig. 3).

(6) Remove fresh air door seal from either inner or outer heater housing half only.

(7) Remove retainer clips attaching heater housing halves together.

(8) Separate heater housing halves.

(9) Remove screw attaching seal retainer and seal around heater core tubes.

(10) Remove heater core tube support clamp.

(11) Remove screws attaching heater core to heater housing and remove core.

(12) Remove seal retainer and seal from heater core.

Assembly

(1) Position heater core in heater housing.

(2) Slide seal retainer and seal over heater core tubes and up against housing. Install attaching screw.

(3) Install heater core to housing screws.

(4) Position support clamp over heater core tubes and install attaching screw.

(5) Install support plate on heater motor.

(6) Install fan on heater motor. Turn fan to make certain it does not hit motor support plate.

(7) Position heater motor and support plate over mounting studs on heater housing.

(8) Install spacers and retainers on heater motor mounting studs.

(9) Position both housing halves together and install retainer spring clips. Add sealer between two halves before reassembly.

(10) Install heater motor resistor assembly.

(11) Position and cement seal around fresh air door opening.

(12) Position heater housing to dash panel seal around heater housing mounting studs.

(13) Install heater as outlined in "Heater Installation."

AIR CONDITIONING

INDEX

	Page
General Information	11
Vacuum Circuits	
Fury and VIP	13
Air Flow for Each Push Button	
Satellite	16
Fury and VIP	13
Valiant	21
Anti-Freeze Recommendations	37
Blower Motor	
Fury and VIP	49
Satellite	55
Valiant	61
Charging the System	65
Correcting Low Refrigerant Level	30
Discharge and Recharge	61
Discharging the System	62
Electrical Controls and Circuits	
Satellite	17
Fury and VIP	13
Valiant	22
Evacuate the System	65
Evaporator	
Fury and VIP	49
Satellite	53
Valiant	59
Expansion Valve	
Fury, VIP and Satellite	48
Valiant	56
Expansion Valve and EPR Valve Test (Single)	35
Expansion Valve and EPR Valve Test (Dual Unit)	66
EPR Valve (Evaporator Pressure Regulator)	43
Gauge Set Manifold and Installation	26
Handling Tubing and Fittings	36
Heater Core	
Fury and VIP	49
Satellite	52
Valiant	58
Inspection and Test Procedures	
Fury, VIP and Satellite	13-18
Valiant	23
Magnetic Clutch	42
Oil Level—Compressor	45
Operating Instructions for Owners	
Satellite	25
Fury and VIP	25
Valiant	25
Operation of all Controls	
Satellite	19
Fury and VIP	14
Valiant	23
Push Button Control Chart	
Satellite	20
Fury and VIP	15
Valiant	24
Radiator Pressure Cap	38
Refrigerant Level	28
Refrigerant Charge	62
Remove Sweep-Test Charge	64
Replace the Receiver Drier	65
Safety Precautions	27
Servicing the Compressor	43
Sweep-Test Charge	63
Testing the System for Leaks	29-64
Test System Pressure	28
Vacuum Control Systems Adjustments and Tests	
Satellite, Fury and VIP	38
Valiant	40
Water Temperature Control Valve Test	
Satellite	19
Fury and VIP	14
Valiant	25

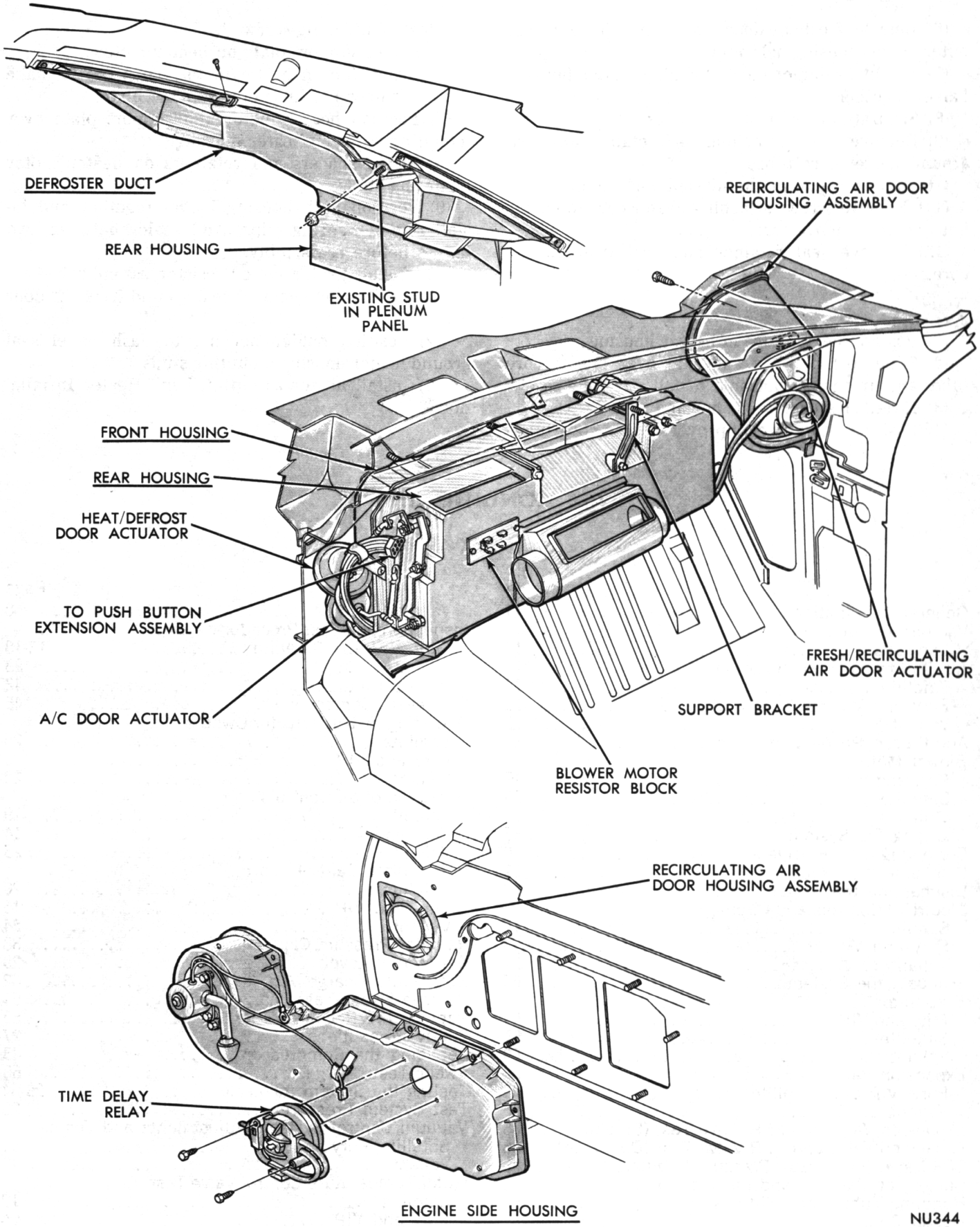

Fig. 1—Air Conditioner—Heater Assembly (Fury-VIP)

GENERAL INFORMATION

FURY and VIP

Three air conditioner options are available. The first option (Front Unit) (Fig. 1), is a combination air conditioning and heating unit contained in two housings separated by the dash panel. The evaporator and heater core are inside the housing installed under the instrument panel, this housing is called the "Passenger Side Housing". The blower motor and time delay relay are installed on the housing attached to the engine side of the dash panel, this housing is called the "Engine Side Housing". The controls and cooling air outlets are integral with the instrument panel. This system functions on the reheat principle.

In the "reheat" air conditioner unit all the air entering the system passes through both the evaporator coil and the heater core, regardless of whether the heater, defroster or air conditioning is in use. All output air temperatures are controlled by a single slide lever in the instrument panel, which operates the heater water flow control valve through a vacuum regulator. Airflow is controlled and directed through the unit by a series of doors operated by vacuum actuators and mechanical linkages. The blower is turned on by any of four push buttons.

The second option is the Automatic Temperature Control System which automatically controls the heating and air conditioning operation of the vehicle to maintain a selected interior temperature. In cold weather, the system provides heat as soon as the warm air is available. When outside temperature increases, the system provides cool dehumidified air.

The unit will heat or cool according to ambient temperature, interior temperature, and control setting; in varying degrees of either heating or cooling without any action on part of operator other than dialing desired temperature and setting system on "Auto."

The basic air conditioning package has not changed. The controls have changed and various sensor components have been added and are described in detail in the "Automatic Temperature Control" section of this manual.

The third option (Station Wagons Only), includes the first or second option plus a roof mounted evaporator assembly.

The roof mounted unit operates automatically in conjunction with the front unit and is not available as a single unit without the front unit.

Controls for the front system (Standard A/C) consists of five push buttons, a temperature control slide

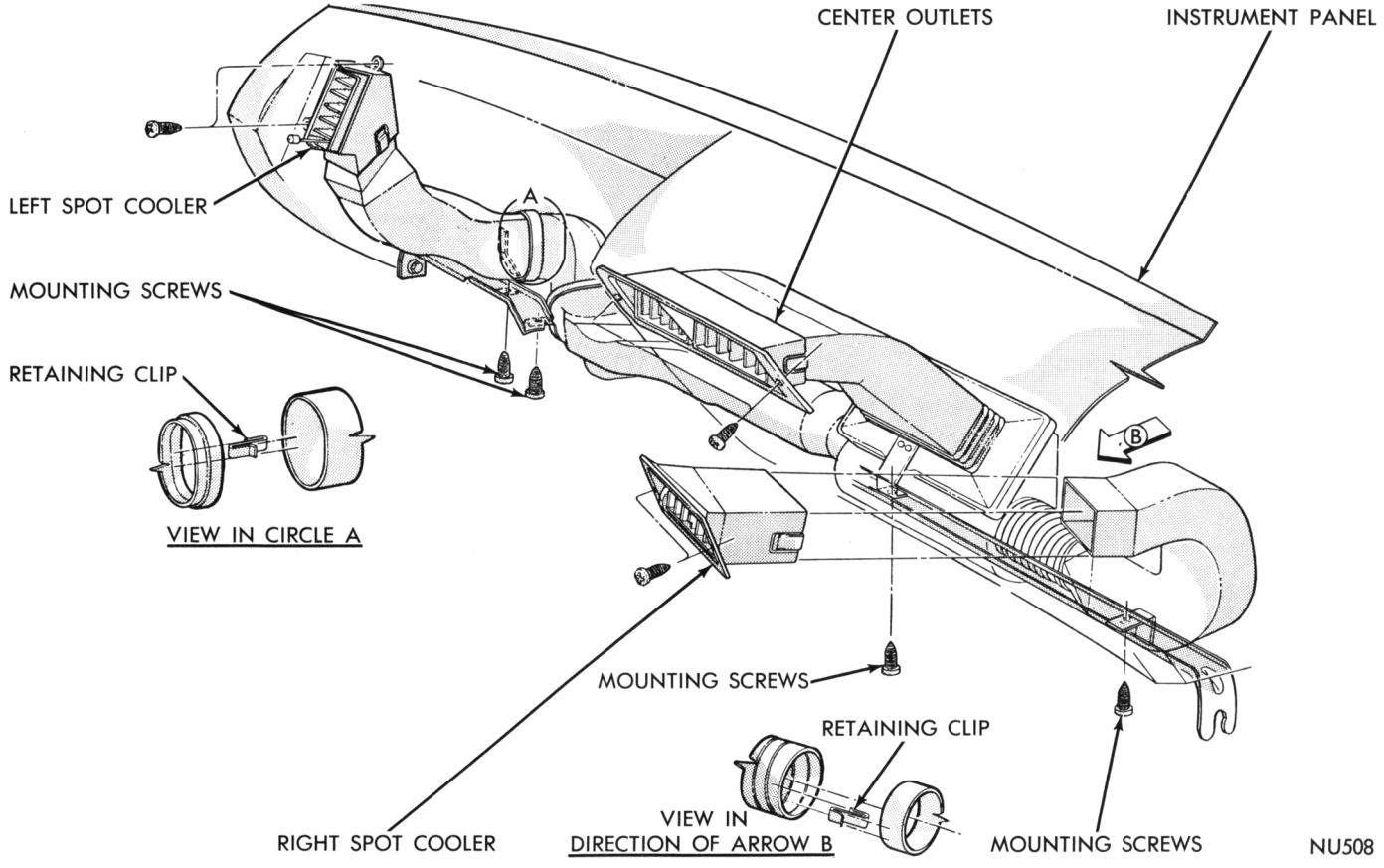

Fig. 1A—Air Conditioning Ducts

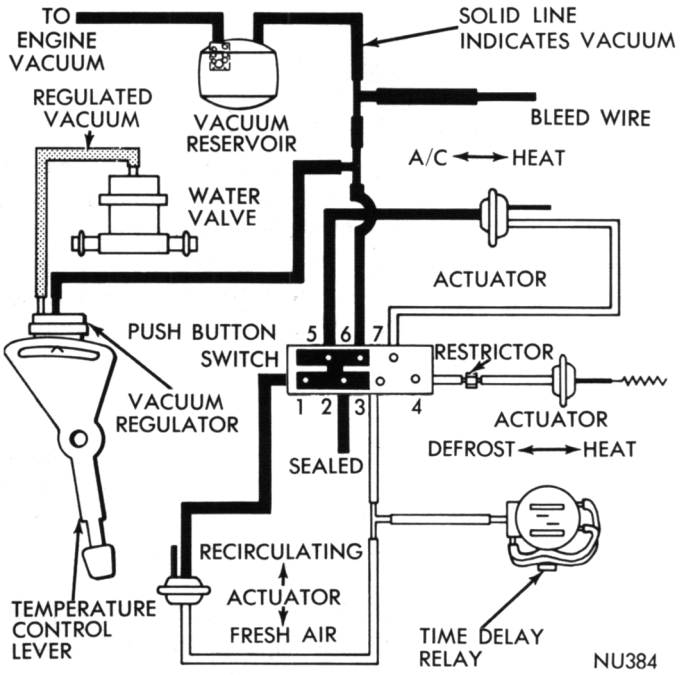

Fig. 2—Vacuum Circuit—Off—Max A/C Position

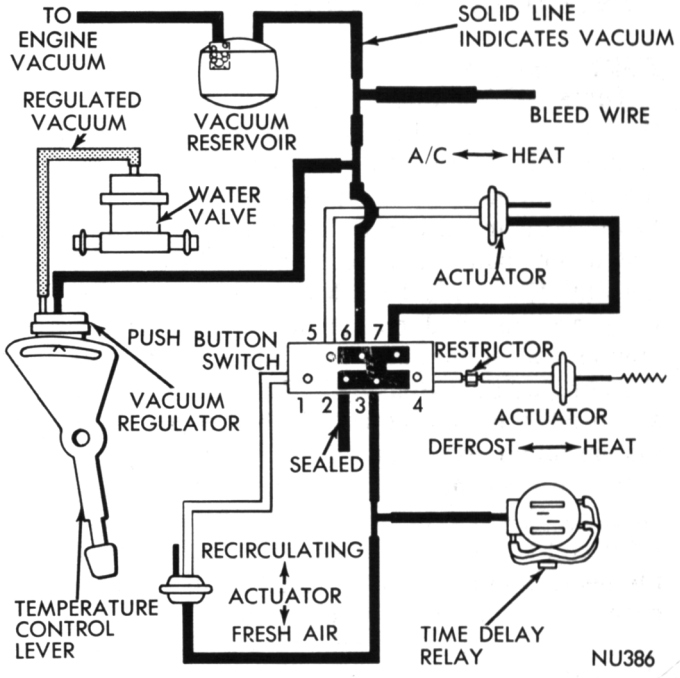

Fig. 4—Vacuum Circuit—Heat Position

lever and a three-position toggle-type fan blower switch.

Control for the roof mounted system consists of a rotary two speed switch.

Push Buttons—Control the source and route of circulating air. "Off" (turns off system); "MAX A/C" (maximum air conditioning); "A/C" (fresh air—air conditioning); "HEAT" (for heater use only);"DEF" (windshield defroster).

Temperature Control Slide Lever—Maintains any desired temperature by sliding the lever right or left when operating either the heater or air conditioner.

Fan Switch—Permits selection of low, medium or high blower speeds. "LOW" (far left); "MEDIUM" (center) and "HI" (far right) used when operating either the heater or air conditioner.

Air Directional Vanes—One at each end, and two in the center of the instrument panel. These are adjusted manually to direct cool air to suit the requirements of the driver and passengers.

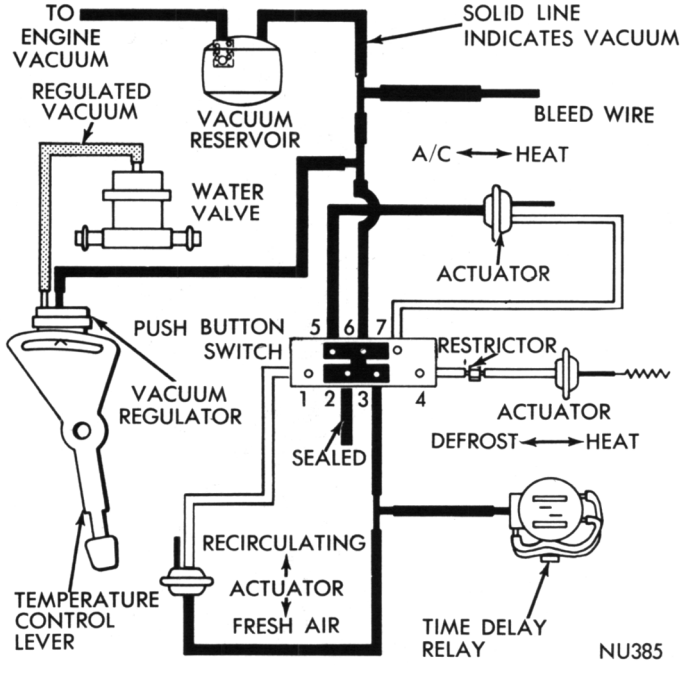

Fig. 3—Vacuum Circuit—A/C Position

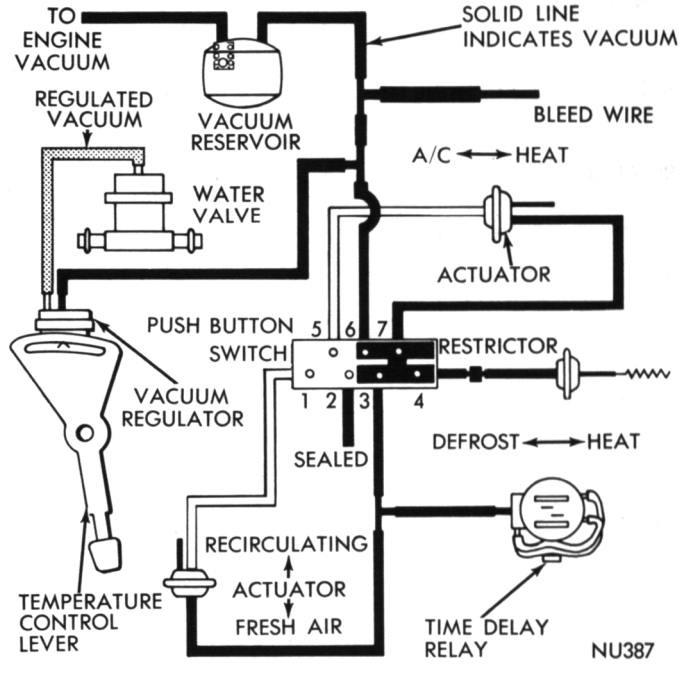

Fig. 5—Vacuum Circuit—Defrost Position

The center outlets are units that can be rotated to direct air up or down; adjustable vanes direct air to either side. (Fig. 1A)

The outlets at each end of the instrument panel are also adjustable or can be shut-off by a damper operated by a vertical slide lever or a horizontal slide lever depending on car model.

VACUUM CIRCUITS FOR EACH PUSH BUTTON POSITION (Fury and VIP)

When testing or adjusting the doors in the distribution system, it is necessary to know the correct position of each door for each push-button position. It is also necessary to know which vacuum hoses are activated for each push-button position. In the following illustrations air flow is indicated as the vacuum actuator hoses are activated for each push-button position (Figs. 2 through 5).

Ventilation

While driving, outside air can be brought into the interior through the inlets in the side cowls. These inlets are opened by pulling the control knobs, located on the lower edge of the instrument panel on both sides of the steering column. The knob to the left of the column controls the air inlet on the left side of the car and the right hand knob controls the right side. The amount of air intake is regulated by the distance the knobs are pulled out. Pushing the knobs all the way in closes off the air intake.

Be sure the air intake controls are pushed all the way in before operating the air conditioning system.

ELECTRICAL CONTROLS AND CIRCUITS

There are two switches, a push button switch (air conditioner and heater vacuum switch), and a fan switch (air conditioner and heater blower switch).

Push Button Control

The power feed circuit is shown in Figure 6. A 20 ampere fuse in the fuse block protects the circuit.

The compressor clutch circuit is energized when either the "Max. A/C" (maximum air conditioning) or the "A/C" push buttons are depressed. The "OFF" button turns off the system.

TEST PROCEDURES

FURY and VIP

Satisfactory performance of the combined air-conditioning and heating system is dependent upon proper operation and adjustment of all operating

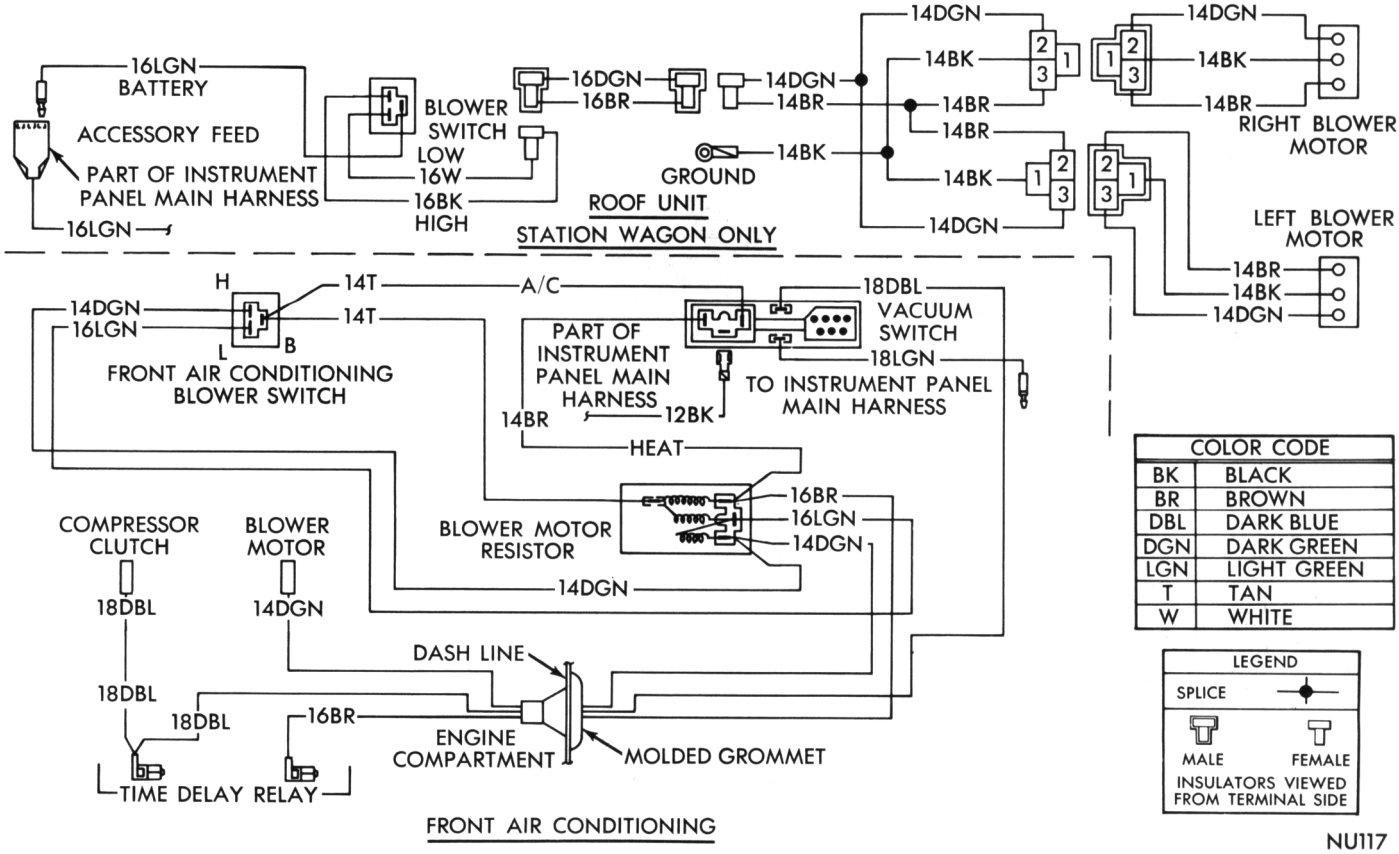

Fig. 6—Electrical Control Circuits (Fury-VIP)

controls, as well as proper functioning of all refrigeration system units. The inspections, tests and adjustments should be used to locate the cause of a malfunction. The inspections and tests in this manual have been arranged in a logical sequence that has proved to be the surest and shortest route to accurate diagnosis. It is recommended that they be followed and performed in the order in which they are presented.

OPERATION OF ALL CONTROLS

Operating controls must be tested in the following sequence.

(1) Inspect and adjust compressor drive belt.

(2) Open vehicle windows.

(3) Move temperature control slide lever to "Off" position.

(4) Start engine and adjust engine speed to 1130 rpm. Use a reliable tachometer.

(5) Push the "A/C," button in.

(6) Fresh-recirculating door should be open to fresh air.

(7) Test the blower operation at all three speed positions. If the blower does not operate correctly, refer to "Electrical Controls and Circuits." Leave the blower switch in the "Low" position.

(8) The compressor clutch should be engaged, the compressor operating, and the air conditioning system in operation. If the clutch does not engage, test the circuit as outlined under "Electrical Controls and Circuits."

Push Button Operation

Reduce the engine speed to normal idle. With the engine operating at idle speed, the vacuum will be high and the vacuum actuators should operate quickly.

If the actuator operation is slow, check the source hose connection at the engine manifold.

Push each button to test the over-all operation of the electrical and vacuum controls.

The "Push Button Control Chart" summarizes the actions that should take place when each button is pushed. See "Chart." Also refer to "Vacuum Circuits for Each Push Button Position."

If all the controls operate in the proper sequence but the action of the dampers and doors is slow or incomplete, inspect for mechanical misalignment, binding or improper linkage adjustment.

Vacuum Actuated Water Valve

The water temperature control valve is operated by engine vacuum which is modulated by a regulator on the back of the temperature control lever. (Fig. 7)

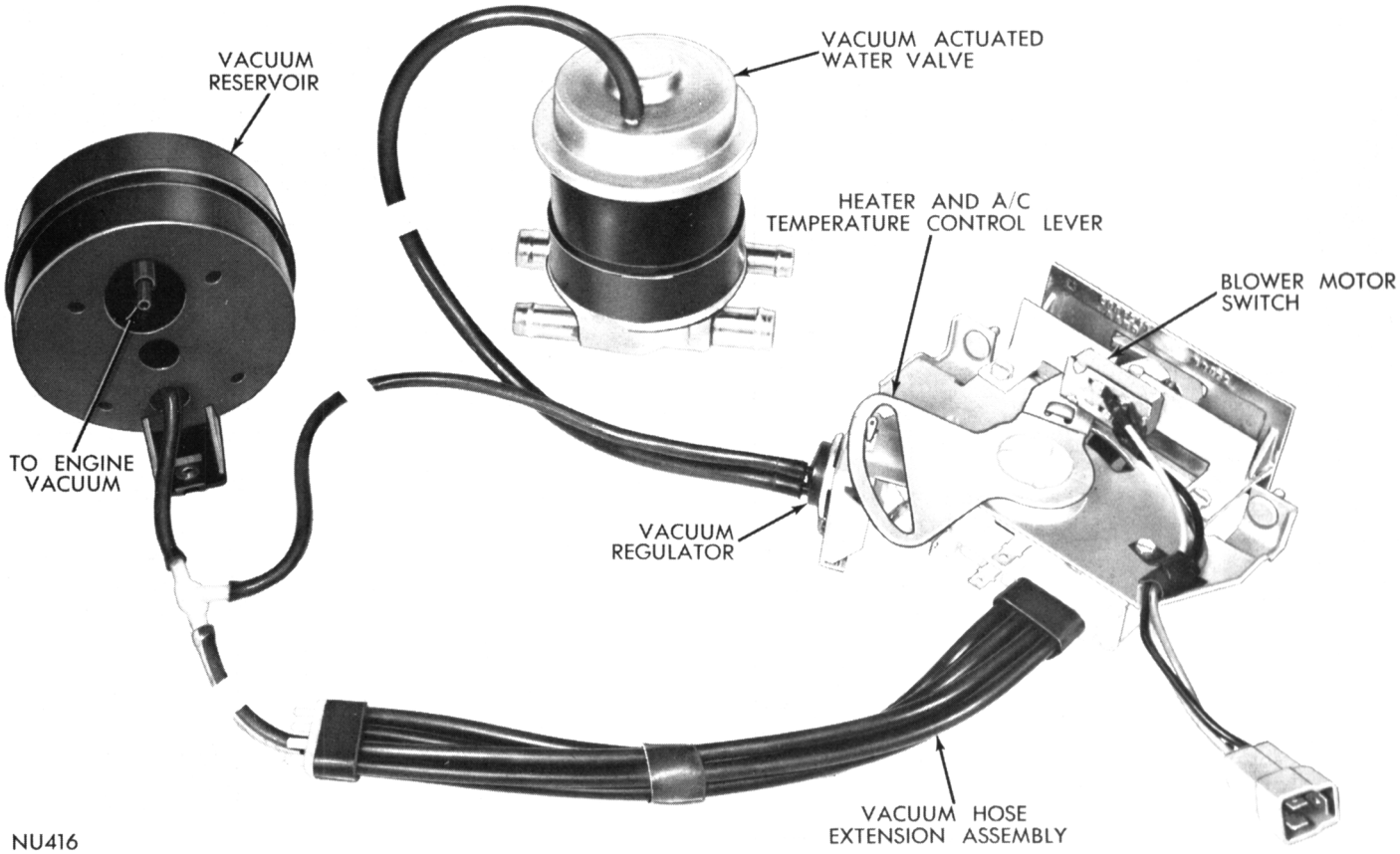

Fig. 7—Vacuum Controls (Fury-VIP)

PUSH BUTTON CONTROL CHART—FURY, VIP

Button	Off	Max. A/C	A/C	Heat	Defrost
Fresh Air Door	Closed	Closed	Open	Open	Open
Recirculating Door	Open	Open	Closed	Closed	Closed
Air Conditioning Door	Open	Open	Open	Closed	Closed
Heater Door	Closed	Closed	Closed	Open	Closed with Air Bleed
Defroster Doors	Closed	Closed	Closed	Closed with Air Bleed	Open
Blower Speed	Off	Hi-Med. Low	Hi-Med. Low	Hi-Med. Low	Hi-Med. Low
Compressor Clutch	Off	On	On	Off	Off

Movement of the control lever to the extreme right (Heat) position allows full vacuum through the regulator and full water flow through the water valve. When the control lever is placed to the left (OFF) position, no vacuum will be present at the water valve and water will not circulate through the heater core.

Time Delay Relay

A vacuum actuated time delay relay is located on the face of the engine side housing in the engine compartment. The purpose of this relay is to reduce the interior windshield condensation to an acceptable level.

When the ambient temperature is above 25 degrees, and the heat or defrost buttons are pressed, the air conditioner will go on for a period of 2 to 10 minutes.

If the system is shut down for less than 10 minutes no delay will occur upon restarting. The relay will reset automatically after 10 minutes shut down.

Restrictor

The time delay system includes, in addition to the time delay relay, a plastic restriction in the vacuum hose leading to the heater door actuator. This restrictor provides some delay in the opening of the defroster door after the "HEAT" or "DEFROST" button is depressed. This delay gives the blower time to expel condensation from the evaporator housing through the heater outlets before it can be blown onto the windshield.

Should it become necessary to replace the vacuum hose leading to the heater door actuators, the correct restrictor should be used.

SATELLITE

The air conditioner used on Satellite models is a combination air conditioning and heating unit which is installed inside the passenger compartment behind the instrument panel. The controls and cooling air outlets are integral with the instrument panel. This system functions on the reheat principle.

In the reheat air conditioner unit all the air entering the system passes through both the evaporator coil and the heater core, regardless of whether the heater, defroster or air conditioning is in use. All output air temperatures are controlled by a single slide lever in the instrument panel, which operates the heater water flow control valve through a bowden cable. Air-flow is controlled and directed through the unit by a series of doors, operated by vacuum actuators and mechanical linkages. The blower is turned on by any of four push buttons.

Controls

Controls for the system consist of five push buttons, a temperature control slide lever and a three-position toggle-type fan blower switch.

Push Buttons—Control the source and route of circulating air. "Off" (turns off system); "Max-A/C" (maximum air conditioning); "A/C" (fresh air—air conditioning); "Heat" (for heater use only); "Def" (windshield defroster).

Temperature Control Slide Lever—Maintains any desired temperature by sliding the lever right or left when operating either the heater or air conditioner.

Fan Switch—Permits selection of low, medium or high blower speeds—used when operating either the heater or air conditioner.

Air Directional Vanes—One at each end, and two in the center of the instrument panel. These are adjusted manually to direct cool air to suit the requirements of the driver and passengers.

The center outlets can be rotated to direct air up or

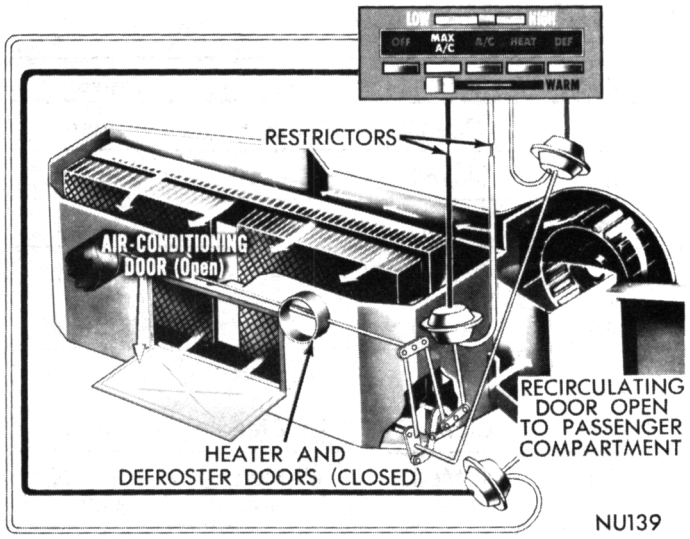

Fig. 8—Off Position Same As Max A/C

down; adjustable vanes direct air to either side.

The outlets at each end of the instrument panel are also adjustable or can be shut-off by a damper operated by a slide lever.

AIR FLOW FOR EACH PUSH BUTTON POSITION (SATELLITE Models)

When testing or adjusting the doors in the distribution system, it is necessary to know the correct position of each door for each push-button position. It is also necessary to know which vacuum hoses are activated for each push-button position. In the following illustrations air flow is indicated as the vacuum actuator hoses are activated for each push-button position (Figs. 8 through 11) and "Push Button Control Chart" page 15.

OFF

The OFF button turns the system off. Vacuum application and door positions are the same as MAX A/C position (Fig. 8).

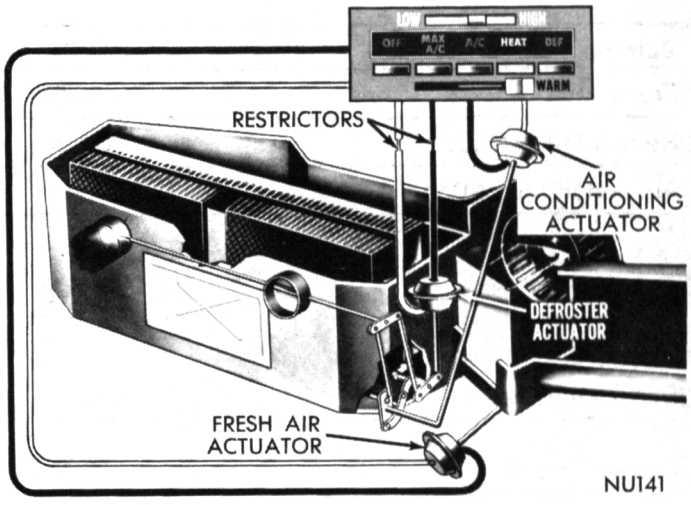

Fig. 10—Heat Position

MAX A/C

The MAX A/C button turns on the blower motor and engages the compressor clutch. The vacuum application is at the back side of all three actuators. The heater and defroster doors are closed and the air-conditioning door is opened. The fresh air-recirculating door closes off the fresh-air inlet and opens the recirculating inlet (Fig. 8).

A/C

When the car has been cooled to the desired temperature and the A/C button is pushed, the vacuum application at the fresh air-recirculating door actuator is transferred to the rod side. This moves the door away

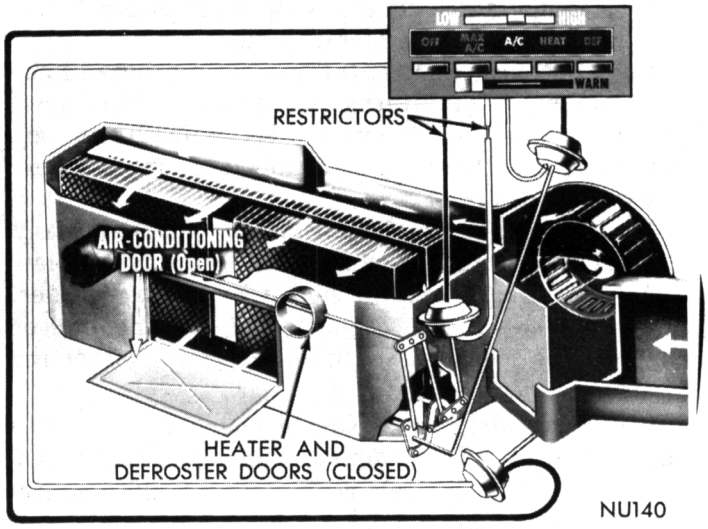

Fig. 9—A/C Position

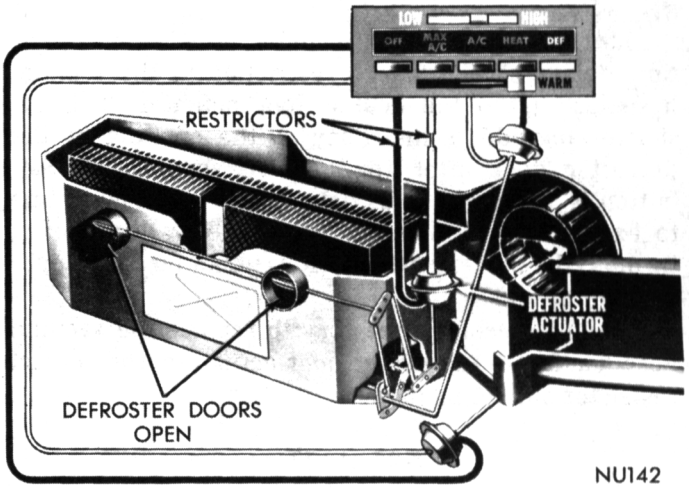

Fig. 11—Defrost Position

from the fresh-air inlet and closes the recirculating inlet. All other vacuum applications and door positions are the same as for the MAX A/C button (Fig. 9).

HEAT

Pressing the HEAT button starts the blower, applies vacuum to the rod side of the air conditioning door actuator and the fresh air recirculating door actuator and to the back side of the defroster door actuator. The fresh air-recirculating door pivots away from the fresh-air inlet and closes off the recirculating inlet, supplying fresh air to the blower, which forces it through the evaporator coils and the heater core. Since the compressor clutch is not engaged, the evaporator has no effect on the airflow temperature. The amount of heat added to the air by the heater core depends on the setting of the water flow control valve (Fig. 10).

The air-conditioning door actuator forces the door closed. A coil spring, attached to the air-conditioning door linkage, pulls up on the heater door arm, opening the passage to the heater outlets in the bottom of the housing. At the same time a rod between the air conditioning door bell crank and the defroster door pivot bell crank forces the defroster doors open slightly, overcoming the defroster actuator, to provide an air bleed to the windshield defrosters. This defroster bleed amounts to about 30 percent of the total airflow.

DEFROST

When the heater section is operating on defrost, there is a 30 percent bleed through the heater outlets. The vacuum applications at the air-conditioning door actuator and the fresh air-recirculating door actuator are on the rod side, the same as for heater operation. The application at the defroster door actuator is transferred from the back to the rod side, opening the defroster doors all the way. As the defroster actuator bell crank is pushed down by the rod, it carries the heater door arm with it, against the coil spring force, toward the closed position. The heater door stops short of the fully closed position, providing the 30 percent bleed to the heater outlets (Fig. 11).

AIR-CONDITIONING OPERATION

The air-conditioning refrigeration system operates at full capacity constantly when either the "MAX. A/C" or "A/C" button is pushed. (Full capacity meaning maximum refrigeration according to the existing ambient temperature and humidity.) The temperature of the air at the outlets is controlled by reheating the airflow after it has passed through the evaporator coils.

REHEAT COOLING CONTROL

The heater core inlet line divides into two branches to feed the core, (Fig. 12). One branch feeds 30 percent of the tubes, around the perimeter of the core. The other branch feeds the 70 percent in the center of the core. The center feed is equipped with a valve, operated by the air-conditioning door, to shut off the flow to the center tubes during air-conditioner operation. The outer 30 percent reheats the refrigerated air to the selected temperature. The amount of reheating is determined by the slide lever of the water flow valve. The temperature can be controlled very closely, and the maximum refrigeration removes excess moisture from the air on extremely humid days.

CONDENSATION DRAIN TUBES

The system has two drain tubes running from the evaporator drain pan into the engine compartment. These tubes must be kept open to avoid an accumulation of water, which would be blown out of the heater or air-conditioning outlets.

Ventilation

While driving, outside air can be brought into the interior through the left inlet under the instrument panel. This inlet is opened by pulling the control knob, located on the lower edge of the instrument panel at the right side of the steering column. Amount of air intake is regulated by the distance the knob is pulled out. To stop air flow, push the knob all the way in. **Be sure this knob is pushed all the way in before operating the air conditioning system.**

ELECTRICAL CONTROLS AND CIRCUITS

There are two switches, a push button switch (air conditioner and heater vacuum switch), and a fan switch (air conditioner and heater blower switch).

The power feed circuit is shown in (Fig. 13). A 20 ampere fuse in the fuse block protects the circuit.

The compressor clutch circuit is energized when either the "Max.-A/C" (maximum air conditioning)

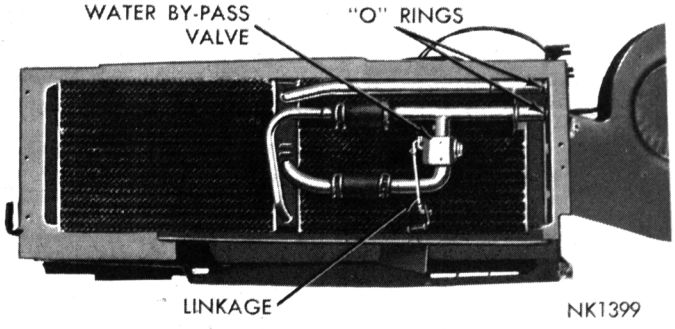

Fig. 12—Heater Core and By-Pass Valve Assembly

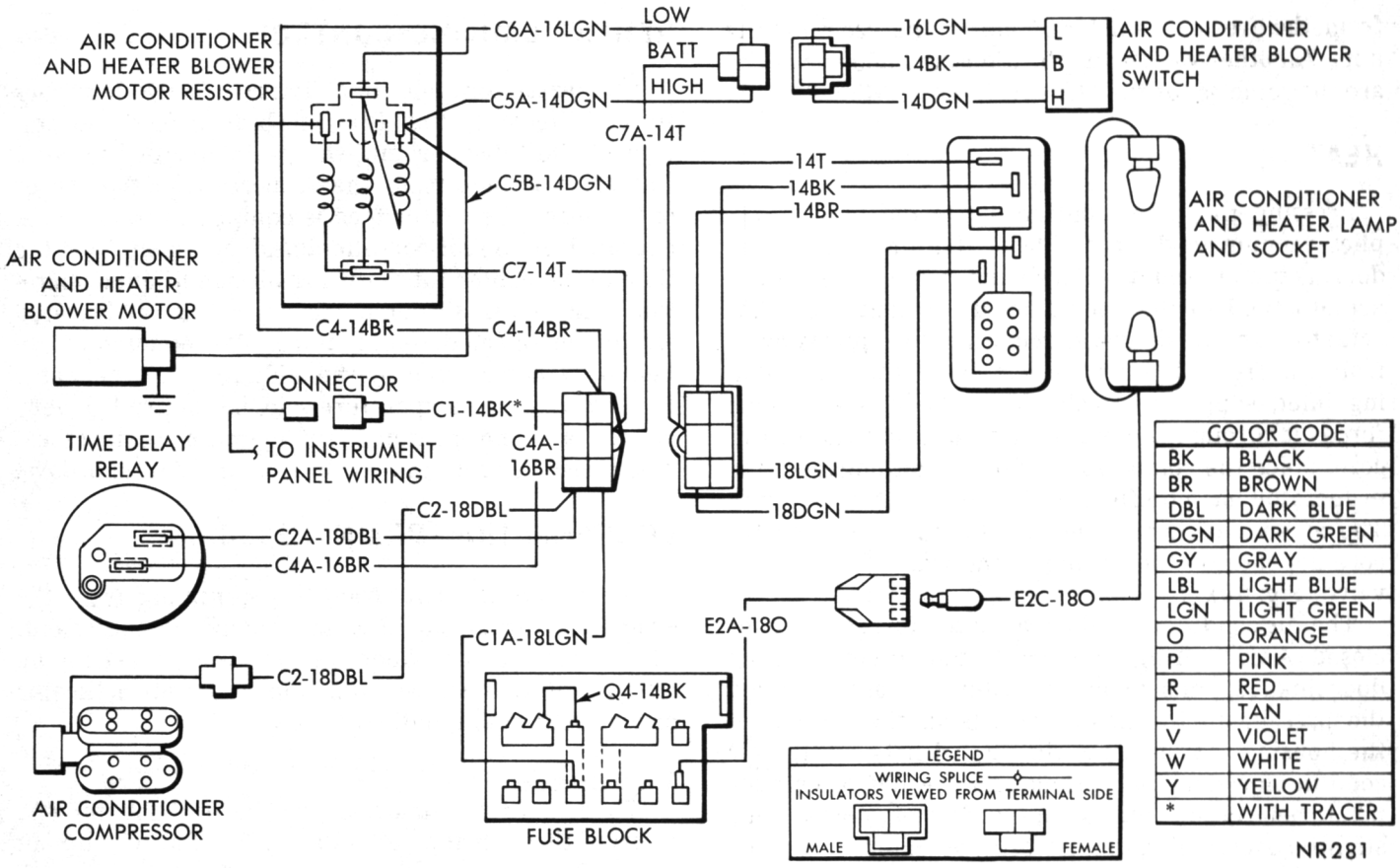

Fig. 13—Electrical Control Circuit (Satellite Models)

or the "A/C," (fresh air—air conditioning) push buttons are depressed. The "OFF" button turns off the system.

Blower Motor (Fan Switch)

The power feed line from the push-button switch to the blower switch is energized only when the ignition is on and any push button, other than "Off," is depressed.

The switch is controlled by moving the control lever from left (low) to right (high).

Time Delay Relay

A vacuum actuated time delay relay is located on the bottom of the fresh-recirculating air door housing. The purpose of this relay is to reduce the interior windshield condensation to an acceptable level.

When the ambient temperature is above 25 degrees, and the heat or defrost buttons are pressed, the air conditioner will go on for a period of 2 to 10 minutes.

If the system is shut down for less than ten minutes no delay will occur upon restarting. The relay will reset automatically after ten minutes shut down.

Restrictors (Satellite Models)

The time delay system includes, in addition to the time delay relay, a plastic restriction in each of the two vacuum hoses leading to the heater door actuator. These restrictors provide some delay in the opening of the defroster door after the "HEAT" or "DEFROST" button is depressed. This delay gives the blower time to expel condensation from the evaporator housing through the heater outlets before it can be blown up onto the windshield.

Should it become necessary to replace either of the vacuum hoses leading to the heater door actuators, the correct restrictor should be used.

INSPECTION AND TEST PROCEDURES

SATELLITE Models

Satisfactory performance of the combined air-conditioning and heating system is dependent upon proper operation and adjustment of all operating controls, as well as proper functioning of all refrigeration system units. The inspections, tests and adjustments should be used to locate the cause of a malfunction. The tests in this manual have been arranged in a logical sequence that has proved to be

the surest and shortest route to accurate diagnosis. It is recommended that they be followed and performed in the order in which they are presented.

OPERATION OF ALL CONTROLS

Operating controls must be tested in the following sequence.

(1) Inspect and adjust compressor drive belt.

(2) Open vehicle windows.

(3) Move temperature control slide lever to "Off" position.

(4) Start engine and adjust engine speed to 1600 rpm for 6 cylinder engines and 1300 rpm for 8 cylinder engines. Use a reliable tachometer.

(5) Push the Max. A/C button in.

(6) Fresh-recirculating door should be closed to fresh air.

(7) Test the blower operation at all three speed positions. If the blower does not operate correctly, refer to "Electrical Controls and Circuits." Leave the blower switch in the "Low" position.

(8) The compressor clutch should be engaged, the compressor operating, and the air conditioning system in operation. If the clutch does not engage, test the circuit as outlined under "Electrical Controls and Circuits."

Push Button Operation

Reduce the engine speed to normal idle. With the engine operating at idle speed, the vacuum will be high and the vacuum actuators should operate quickly.

If the actuator operation is slow, check the source hose connection at the engine manifold.

Push each button to test the over-all operation of the electrical and vacuum controls.

The "Push Button Control Chart" summarizes the actions that should take place when each button is pushed. See "Chart." Also refer to "Air Flow for Each Push Button Position."

If all the controls operate in the proper sequence but the action of the dampers and doors is slow or incomplete, inspect for mechanical misalignment, binding or improper linkage adjustment.

Water Valve Test (Figs. 14 and 15)

The temperature control water valve is mounted from the engine compartment side of the dash panel.

The sensing unit is located at the lower right-hand corner of the air conditioning housing.

Remove the radiator cap to minimize pressure in the car's cooling system.

Move the temperature control slide lever on the instrument panel to the extreme "Warm" position and then back to the "Off" position.

Push the "Max A/C" button in, and with the blower in the "Low" position, run the air conditioning system for five minutes, then test the water valve by momentarily disconnecting the heater outlet hose at the upper side of the heater.

CONTROL CABLE (Turnbuckle) (Fig. 14)

A turnbuckle has been incorporated in the air conditioning temperature control cable. This turnbuckle

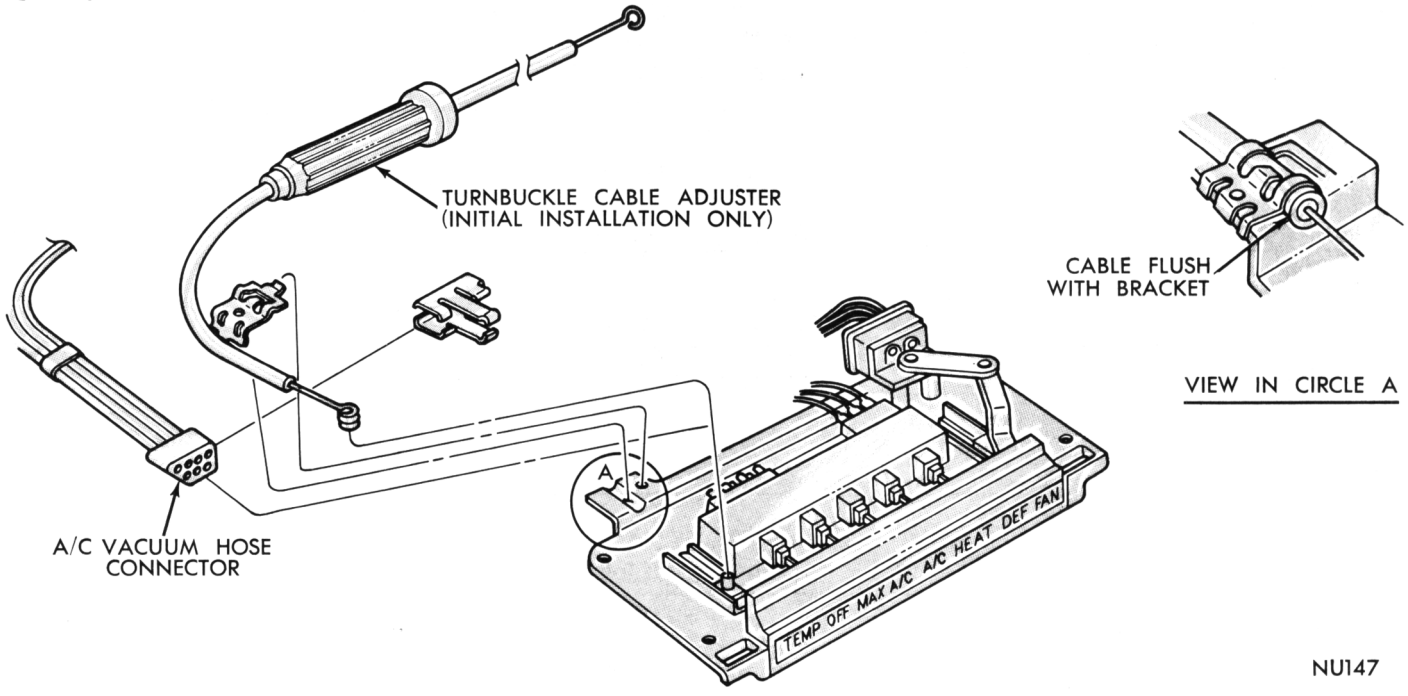

Fig. 14—Water Temperature Control Cable Adjustment

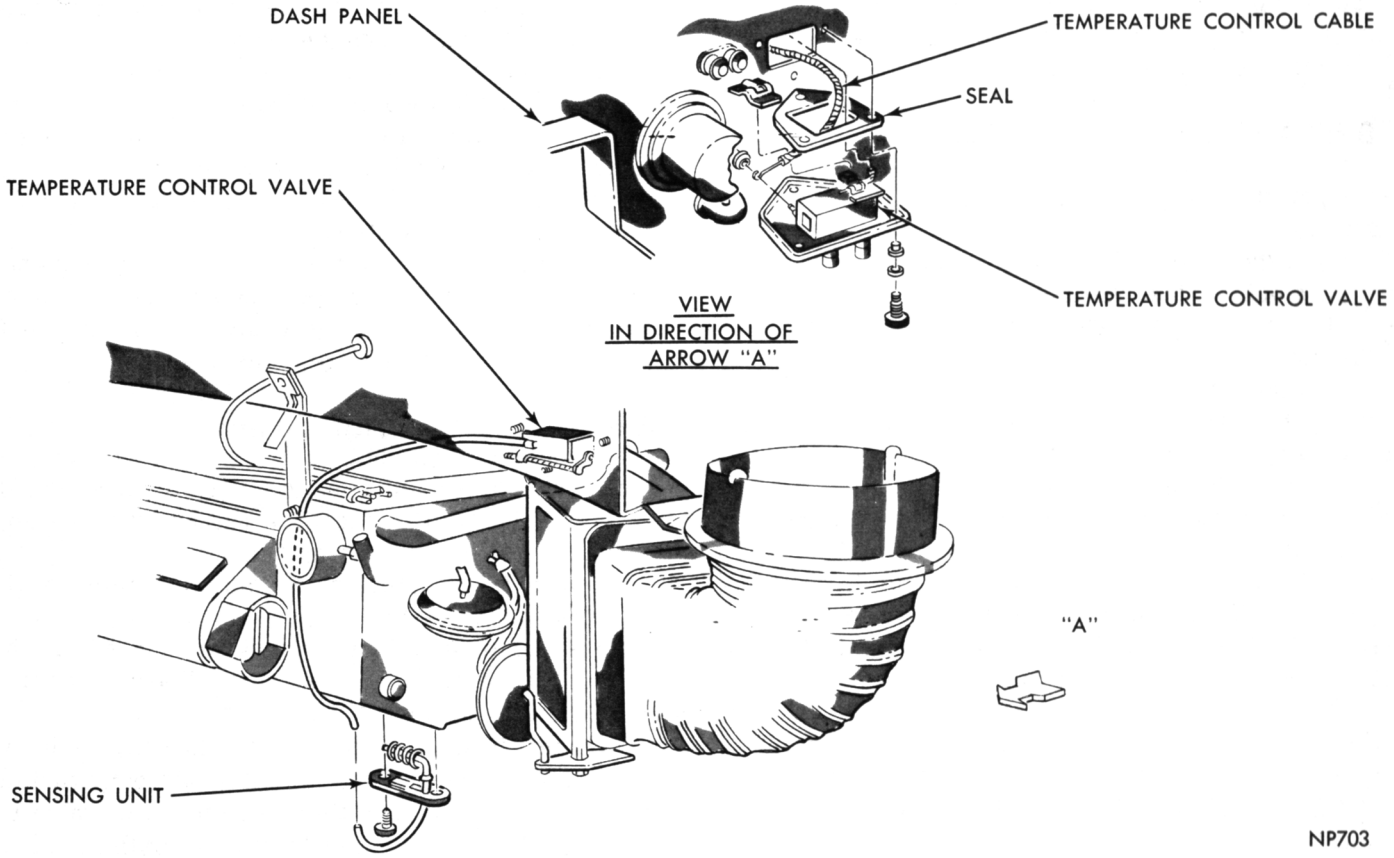

Fig. 15—Water Temperature Control Lever Adjustment at Dash Panel

is used to adjust the length of the cable housing without removing it from the instrument panel control or the water valve.

Adjustment

If the water valve does not fully open or close, the control cable housing may be shortened or lengthened by rotating the turnbuckle (remove glove box on Coronet and Charger models to adjust). Replacement cable will be of the standard type. (See control cable adjustment).

Control Cable Adjustment

To adjust the temperature control cable, place the water valve in the full open position and position the end of the control cable housing against the bracket

SATELLITE PUSH BUTTON CONTROL CHART

Button	Off	Max. A/C	A/C	Heat	Defrost
Fresh Air Door	Closed	Closed	Open	Open	Open
Recirculating Door	Open	Open	Closed	Closed	Closed
Air Conditioning Door	Open	Open	Open	Closed	Closed
Heater Door	Closed	Closed	Closed	Open	Closed with Air-Bleed
Defroster Doors	Closed	Closed	Closed	Closed with Air-Bleed	Open
Blower Speed	Off	Hi.-Med. Low	Hi.-Med. Low	Hi.-Med. Low	Hi.-Med. Low
Compressor Clutch	Off	On	On	Off	Off

stop. Install eyelet on lever and install the retaining clip.

When adjusting the temperature control valve cable on the instrument panel, place the temperature control lever in the extreme right-hand position (Warm).

Place the water valve in the open position, attach the temperature control cable assembly to the control arm, and clamp the cable housing to the control bracket with the retaining clip.

If the temperature control valve does not close completely, reposition the control cable housing in the retaining clip so that the valve does close completely. If the valve cannot be closed completely by adjustment, replace the water valve and retest the adjustment.

VALIANT and BARRACUDA

The combination heater-air conditioner used on Valiant and Barracuda Models controls and directs airflow by opening and closing a series of doors. The blend air door, which controls the temperature of the heater output, is opened and closed by a bowden cable from the temperature control slide lever in the instrument panel. All the other doors, and the heater water flow valve are operated by vacuum actuators. A single blower serves both heater and air conditioner. In fact, all of the components in the blower motor circuit are common to the heater and air conditioner. Controls and cooling air outlets are integral with the instrument panel.

Three cooling air outlets are contained in one unit secured to the lower edge of the instrument panel. Each outlet can be adjusted independently to direct air up, down, or to either side. Two fixed openings in the distribution duct installed under the instrument panel direct cooling air to the floor.

Controls for the system consists of five push buttons, a temperature control slide lever and a fan blower switch.

Push Buttons—Control the source and route of circulating air. "Off" (turns off the entire system); "Max. A/C" (maximum air conditioning): "A/C" (fresh air air conditioning); "Heat" (for heater use only); "Def" (windshield defrosting).

Temperature Control Slide Lever—Maintains any desired temperature by sliding the lever right or left when operating either the heater or air conditioner and controls the automatic cycling of the refrigeration system.

Fan Switch—Permits selection of "Low," "Medium" or "High" blower speed. "Low" (far left), "Medium" (center) and "High" (far right) used when operating either the heater or air conditioner.

Air Directional Vanes—Located on the lower edge of the instrument panel. These are manually adjusted up, down, or to either side to deflect cool air to suit requirements of driver and passengers.

AIR FLOW FOR EACH PUSH BUTTON POSITION (Valiant and Barracuda)

(Figs. 16 thru 19)

When testing or adjusting the doors in the distribution system, it is necessary to know the correct position of each door for each push-button position. In the illustrations which follow; air flow is indicated, also which vacuum actuator hoses are activated for each push-button position.

Warm Weather Ventilation—Two "summer" doors are provided, one below each end of the instrument panel. These doors can be opened manually for fresh air ventilation during warm weather. **Before using the air conditioner be sure both ventilation doors are closed and latched.**

OFF

When the heater-air conditioner is off, the fresh-air door is closed and the recirculating door is open. The air-conditioning door closes off the heater outlet duct and opens the passage to the evaporator coil, and the heater water flow valve is closed (Fig. 16).

MAX A/C

With the "MAX A/C" button pushed in, all of the doors and the water valve are in the same position they are in when the "OFF" button is pushed. The "MAX A/C" push button merely closes the electrical circuits to the blower motor resistor block and the evaporator temperature control switch. The temperature control switch regulates the air-conditioning out-

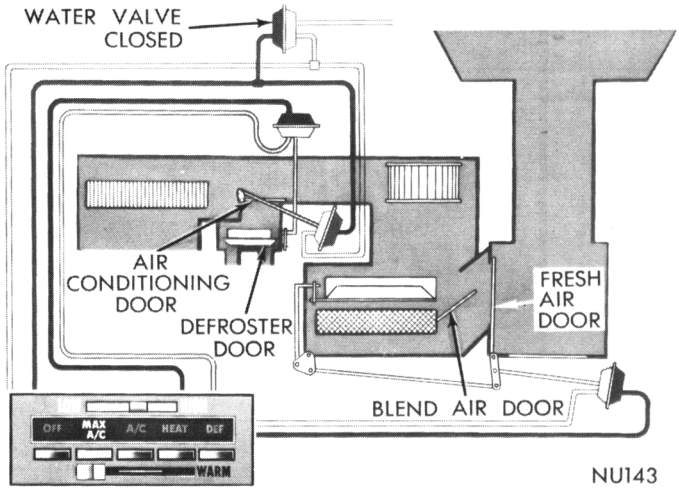

Fig. 16—Off Position Same As Max A/C

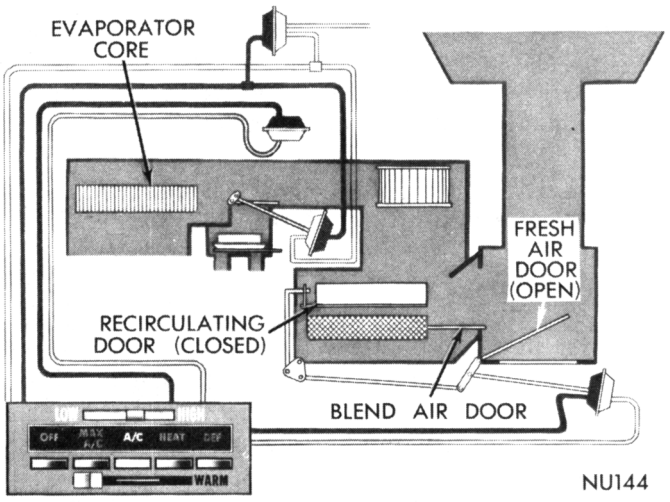

Fig. 17—A/C Position

let air temperature, by engaging and disengaging the compressor clutch (Fig. 16).

A/C

The "A/C" button re-routes fresh-air door vacuum to the rod side of the actuator. This opens the fresh-air door and operates the linkage to close the recirculating door. The recirculating door and the fresh-air door always operate simultaneously. Any time one of them is open, the other is always closed. All the other doors remain in the same position as for MAX A/C operation (Fig. 17).

HEAT

With the "HEAT" button in and the temperature control lever all the way to the right, the fresh-air door is opened to the cowl ventilation inlet. At the same time, the fresh-air door actuator closes the recirculating door. The blend air door is held closed by a bowden cable from the temperature control slide lever so all the airflow from the cowl passes through the heater core and into the blower (Fig. 18).

Vacuum is applied to the rod side of the air-conditioning door actuator, closing off the passage to the evaporator core, and opening the passage to the heater-defroster manifold. Since the heater-defroster door is raised, the full flow of heated air goes through the heater outlets, except for a small amount that bleeds off through the defroster outlets.

DEFROST

When the defroster button is pushed, all conditions are the same as for heater operation, except that vacuum is now applied to the rod side of the defroster door actuator. The door moves away from the defroster outlets and partially closes off the heater outlets. The heater outlets are left open far enough to allow about 30 percent of the blower output to bleed off. The other 70 percent is defroster air (Fig. 19). The full range of temperature control is available during defroster operation, as are all three blower motor speeds.

ELECTRICAL CONTROLS AND CIRCUITS

The system is controlled by the following switches:

(a) Push button switch (air conditioner and heater vacuum switch).

(b) Fan switch (air conditioner and heater blower switch).

(c) Temperature control switch (temperature control slide lever).

The power feed circuit is shown in Figure 20. A 20 ampere fuse in the fuse block protects the circuit.

The compressor clutch circuit is energized when either the "Max A/C," (maximum air conditioning) or the "A/C" (fresh air-air conditioning) push buttons are depressed. The "Off" button turns off the system.

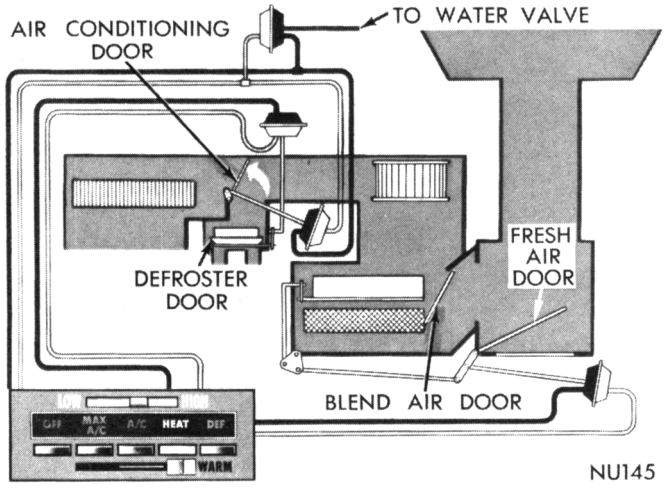

Fig. 18—Heat Position

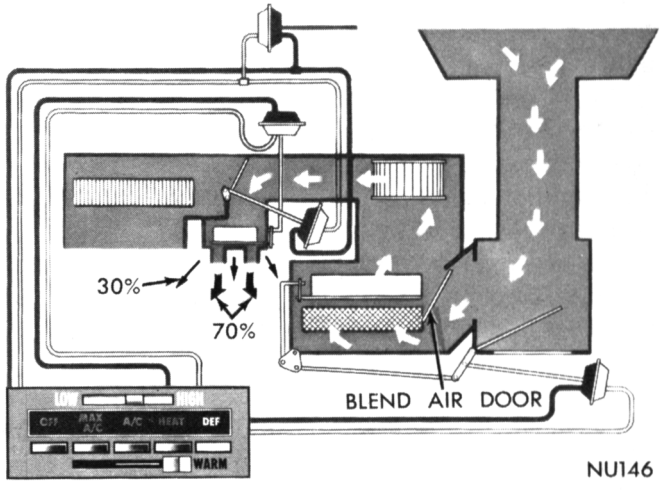

Fig. 19—Defrost Position

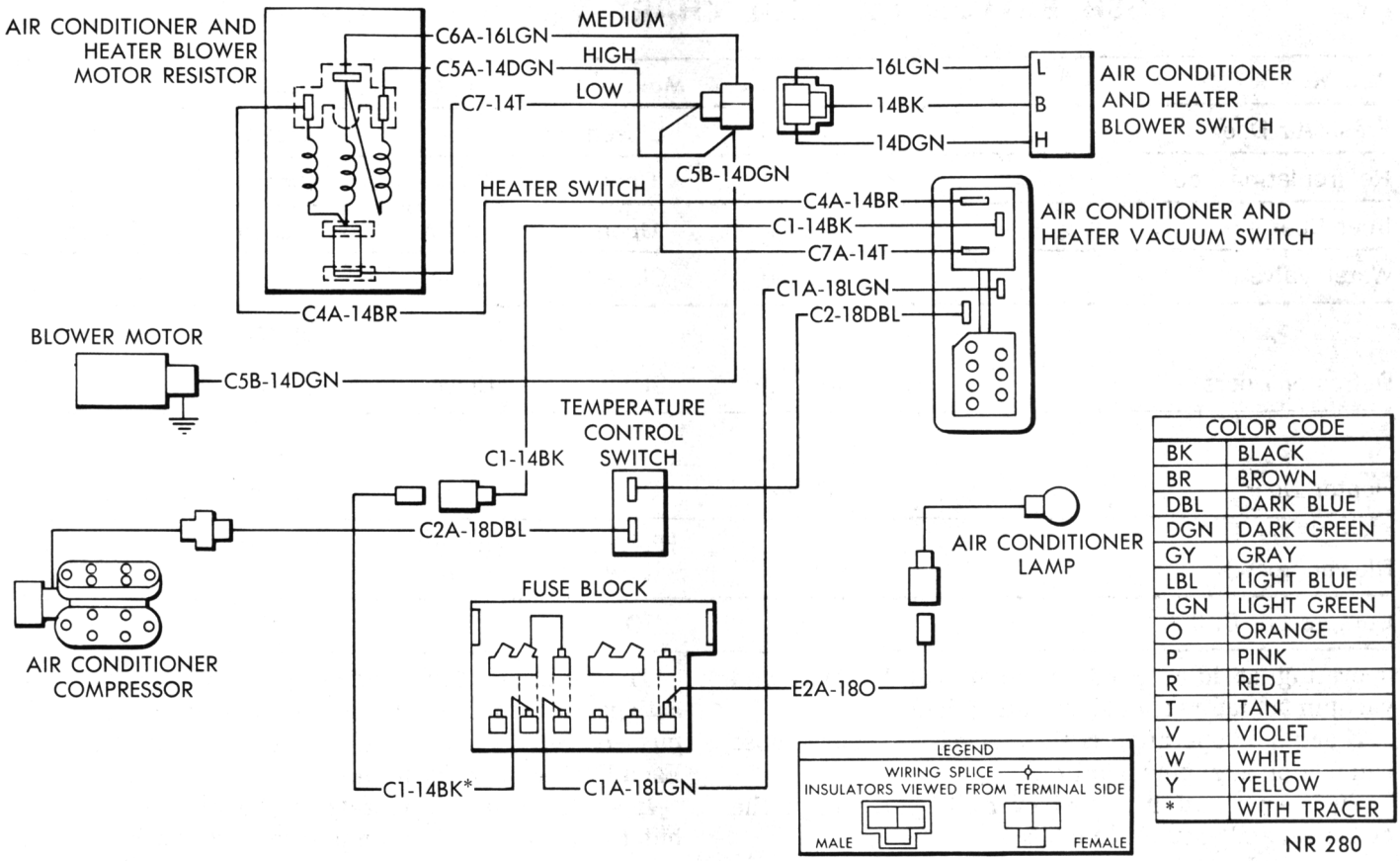

Fig. 20—Electrical Control Circuit (Valiant-Barracuda)

Blower Motor (Fan Switch)

The power feed line from the push-button switch to the blower switch is energized only when the ignition is on and any push button, other than "Off," is depressed.

The fan switch is controlled by moving the control lever from left "Low" to right "High."

Temperature Control Switch

The temperature control switch controls the temperature of the evaporator by automatically cycling the compressor clutch. As the clutch is cycled on and off, the temperature of the evaporator is held at the setting of the temperature control lever.

INSPECTION AND TEST PROCEDURES

VALIANT and BARRACUDA

Satisfactory performance of the combined air-conditioning and heating system is dependent upon proper operation and adjustment of all operating controls, as well as proper functioning of all refrigeration system units. The inspections, tests and adjustments should be used to locate the cause of a malfunction. The tests in this manual have been arranged in a logical sequence that has proved to be the surest and shortest route to accurate diagnosis. It is recommended that they be followed and performed in the order in which they are presented.

OPERATION OF ALL CONTROLS

(Valiant and Barracuda)

(1) Inspect, test, and adjust compressor drive belt.

(2) Remove radiator pressure cap.

(3) Start engine and adjust engine speed to 1600 rpm for 6 cylinder and 1300 rpm for 8 cylinder engines. Use a reliable tachometer.

(4) Move temperature control lever to "Off" position and push the "A/C" button.

(5) The fresh air door should be open to fresh air. Open vehicle windows.

(6) Test the blower operation at all three speed positions. If the blower does not operate correctly, refer to "Electrical Controls and Circuit." Leave the blower switch in the "High" (Hi) position.

(7) The compressor should be running and the air conditioning system in operation.

Push Button Operation

Reduce engine speed to normal idle. With engine

PUSH BUTTON CONTROL CHART—VALIANT BARRACUDA

Button	Off	Max. A/C	A/C	Heat	Defrost
Fresh Air Door	Closed	Closed	Open	Open	Open
Recirculating Door	Open	Open	Closed	Closed	Closed
Inlet Door	Open	Open	Open	Closed	Closed
Water Valve	Closed	Closed	Closed	Open	Open
Defroster Doors	Closed	Closed	Closed	Closed with Air Bleed	Open
Heater Door	Open	Open	Open	Open	Closed with Air Bleed
Blower Speed	Off	Hi.-Med. Low	Hi.-Med. Low	Hi.-Med. Low	Hi.-Med. Low
Compressor Clutch	Off	On	On	Off	Off

operating at idle speed, vacuum will be high and vacuum actuators should operate quickly.

If actuator operation is slow, check the source hose connection at engine manifold.

Push each button to test over-all operation of the electrical and vacuum controls.

The "Push Button Control Chart" summarizes the actions that should take place when each button is pushed. See "Chart." Also, refer to "Air Flow for Each Push Button Position."

If all the controls operate in the proper sequence but the action of the dampers and doors is slow or

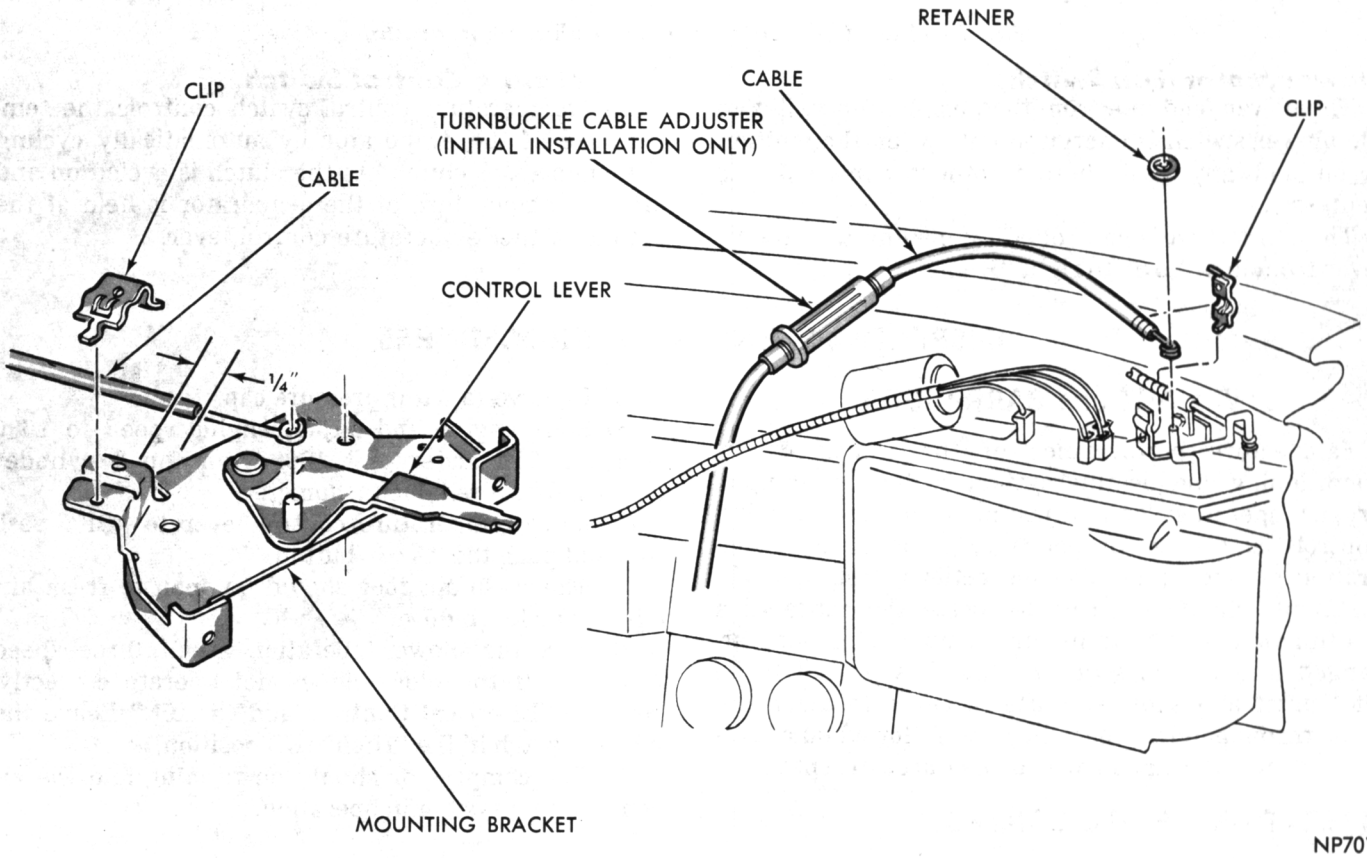

Fig. 21—Water Temperature Control Lever Adjustment (Valiant-Barracuda)

incomplete, inspect for mechanical misalignment, binding or improper linkage adjustment.

Water Temperature Control Valve Test (Fig. 21)

The water temperature control valve is mounted from the engine compartment side of the dash panel. The sensing unit is located at the right hand corner of the air conditioning housing.

Remove the radiator cap to minimize pressure in the vehicle's cooling system.

With the "MAX A/C" or "A/C" button pushed in, test water valve by momentarily disconnecting heater outlet hose. A slight spillage of water when the hose is removed is normal. A continuous flow of water indicates that the valve is not closing properly or the vacuum hoses are not properly connected.

If the temperature control valve does not close completely, replace the valve.

OPERATING INSTRUCTIONS FOR OWNERS (ALL MODELS)

Fast Cool Down

If the car has been parked in the hot sun, open the windows and drive the car for several minutes to expel the warm air, and at the same time:

(1) Slide the temperature control lever to the "Off" position.

(2) Push the "Max.-A/C" button in.

(3) Move the fan switch to "High".

(4) Adjust the four cooling outlet vanes to direct cooled air to the desired area.

Normal Cooling (Cooling with Fresh Air)

When the desired amount of cooling is obtained with the "Max.-A/C" button, you can continue cooling with fresh outside air for added comfort by pushing the "A/C" button and adjusting the fan switch to change fan blower speed. If less cooling is desired, move the fan switch lever to "Low" speed and readjust the cooling outlets for indirect cooling. For warmer air, move the temperature control lever to the desired temperature.

Cooling for Special Conditions

The air conditioner provides maximum dehumidified air at the most comfortable weather conditions above 50°F.

During rainy or muggy weather, operate the system as usual, using the temperature control lever to clear the windows and provide interior comfort.

If the outside air is extremely humid or too warm for cooling with fresh air as previously described, push the "Max.-A/C" button.

This method is also recommended when driving through areas which are extremely dusty or have objectionable odors.

Operation in Traffic

In extremely slow traffic, additional cooling may be required.

When pulling a trailer, when driving through heavy traffic at 10 to 15 mph. or when pulling up steep hills additional engine cooling may be required. If any or all of these situations are encountered, put the transmission in a lower gear. At stop lights and other stops put transmission in Neutral and increase engine speed by pressing accelerator pedal.

Radiator Cap

Air conditioned vehicles must be equipped with a radiator cap having a holding pressure of 15 to 16 psi. Replace the radiator cap that does not test within these specifications.

Condenser

Inspect the condenser for obstruction for foreign matter. Clean if necessary.

Any obstruction to the free flow of air across the condenser will decrease heat dissipation from the condenser, decrease the efficiency of the condenser and, in turn, decrease the evaporator's efficiency. These conditions result in increasing the discharge pressure and horsepower load on the engine. The use of a bug screen is not recommended as it, too, will decrease the free flow of air.

Inspect the condenser for bent or damaged fins. The bent fins on the condenser deflect air flow across the bent portions, decreasing the condenser area.

Off-Season Operation (Valiant and Barracuda)

During the off-cooling season, suggest to the owners that they operate the air-conditioning system for at least five minutes once a week with the "Max.-A/C" button depressed and the temperature control lever in the warm position. This will cause the air conditioner compressor to pump oil to the compressor seal, preventing the seal from drying out and causing loss of refrigerant.

AntiFreeze Required for Summer Operation

Air conditioned cars must be protected with a permanent type antifreeze during summer to +15°F. or lower to prevent the heater core from freezing. However, this protection does not provide sufficient corrosion inhibitors for the engine cooling system.

Summer protection to —15°F. will provide adequate inhibitors for protection of engine cooling system against corrosion. **Do not use the same antifreeze for more than one year.**

Bug Screens (All Models)

Bug screens should not be installed on vehicles equipped with air conditioner. A bug screen installed in front of the condenser will reduce air flow and effect air conditioner performance. Under severe heat conditions a bug screen may cause the engine to over-heat.

THE GAUGE SET MANIFOLD INSTALLATION (ALL MODELS)

The Gauge Set Manifold is an indispensable test and diagnosis instrument. The gauge set manifold Tool C-3740 has two compound suction gauges and one discharge pressure gauge. Two accurately calibrated suction pressure gauges are required for the evaporator pressure regulator valve test. (Fig. 21 and 22). **The hoses are shown in the test illustrations for quick reference to distinguish the various adaptations.**

Evaporator Suction Gauge—at the left side of the manifold set is calibrated to register 0 to 30 inches of vacuum and 0 to 150 psi. This gauge is connected to the suction service port of the compressor. On Valiant installations this gauge is connected to the compressor inlet service port. A special service port adapter, supplied with the gauge set, provides the means of connecting the gauge set manifold hose to the service port. When the adapter is installed at the port and tightened, the stem of the valve in the service port is depressed, opening the service port valve.

Discharge Pressure Gauge—at the center of the manifold set is calibrated to register 0 to 300 psi. For all tests this gauge is connected to the discharge service port of the compressor. A service port adapter is used to make this connection. The needle valve, located below the discharge pressure gauge, is used to damp out gauge needle oscillations so that accurate readings can be obtained.

Compressor Inlet Gauge—is mounted at the right side of the manifold set. This mounting is for convenience only. There are no passages between this gauge and the gauge manifold. The compressor inlet gauge is calibrated to register 0 to 30″ of vacuum and 0 to 150 psi. This gauge and the evaporator suction gauge must be accurately calibrated so that the needles of both gauges are exactly at 0 before making tests. The compressor inlet gauge is connected to the compressor inlet service port by a special service port adapter. **This gauge is used, when checking the EPR Valve.** Not used on Valiant installations (Fig. 23).

Center Manifold Outlet—provides the necessary connection for a long service hose used when dis-

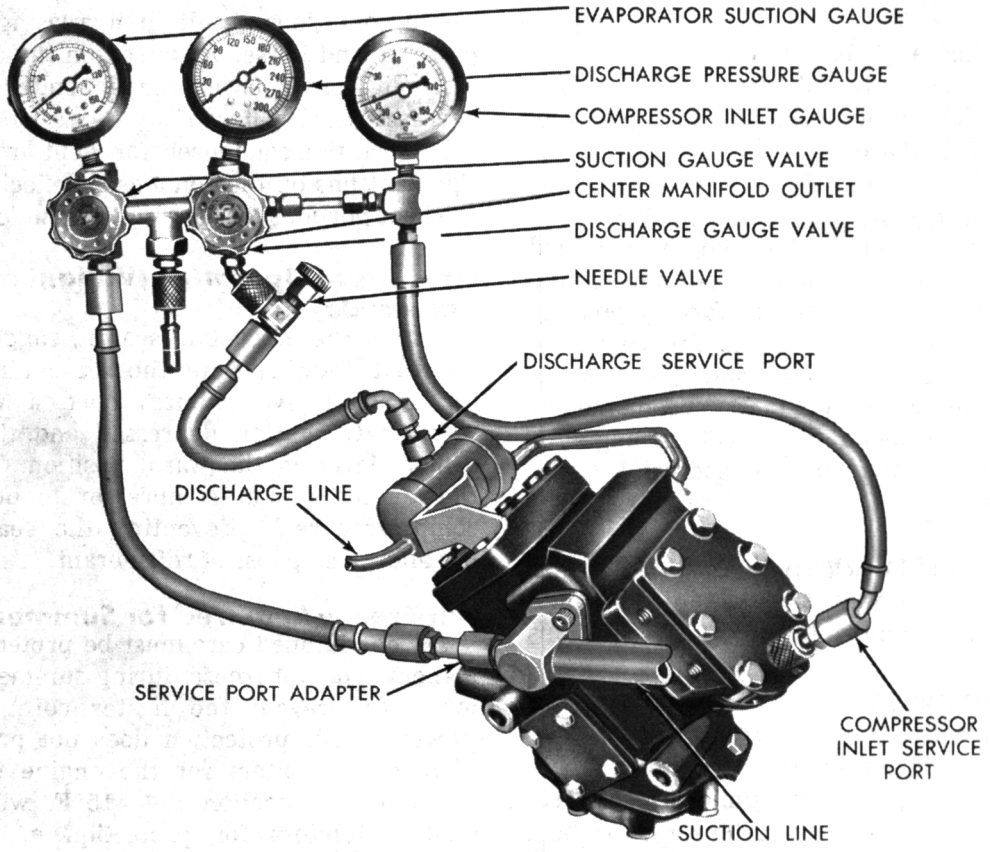

Fig. 22—Gauge Set Manifold Connections—(Fury, VIP and Satellite)

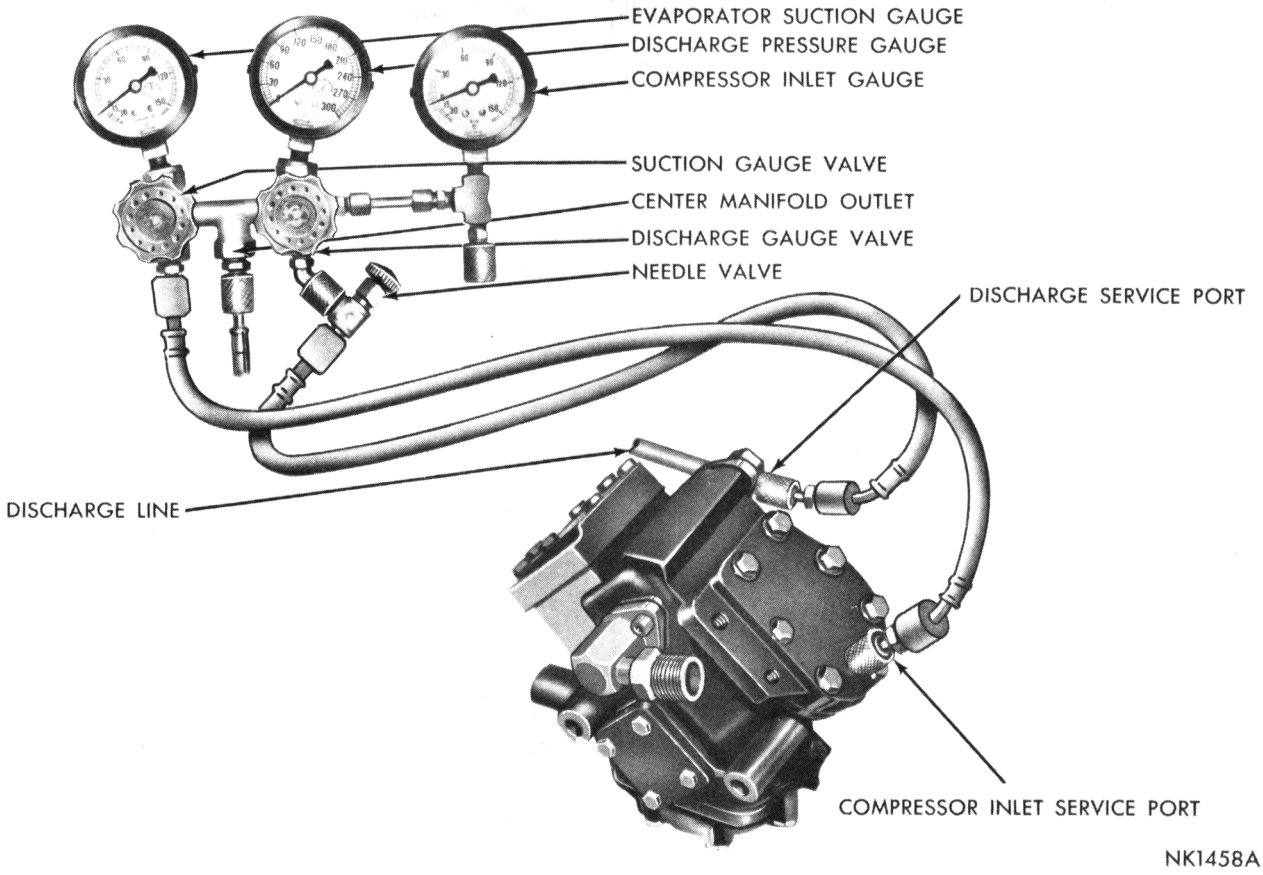

Fig. 23—Gauge Set Manifold Connections—(Valiant)

charging the system, using a vacuum pump to "pull a vacuum" before charging the system, and for connecting the supply of refrigerant when charging the system.

Manifold Gauge Valves—should be closed when connecting the gauge set manifold to the service ports of the compressor. The suction gauge valve at the left is opened to provide a passage between the suction gauge and the center manifold outlet. The discharge gauge valve at the right is opened to provide a passage between the discharge pressure gauge and the center manifold outlet.

Detailed instructions for proper use of the gauge set manifold are contained in the test covering each test and service operation employing these gauges.

SAFETY PRECAUTIONS

The refrigerant used in all air-conditioning installation is Refrigerant 12. It is transparent and colorless in both the liquid and vapor state. Since it has a boiling point of **21.7 degrees F. below zero,** at atmospheric pressure, it will be a vapor at all normal temperatures and pressures. The vapor is heavier than air, non-flammable and nonexplosive. It is nonpoisonous except when it is in direct contact with open flame. It is noncorrosive except when combined with water. The following precautions must be observed when handling Refrigerant 12.

CAUTION: Wear safety goggles when servicing the refrigeration system.

Refrigerant 12 evaporates so rapidly at normal atmospheric pressures and temperatures that it tends to freeze anything it contacts. For this reason, extreme care must be taken to prevent any liquid refrigerant from contacting the skin and especially the eyes.

Always wear safety goggles Tool C-3355 when servicing the refrigeration part of the air-conditioning system. Keep a bottle of sterile mineral oil and a weak solution of boric acid handy when working on the refrigeration system. Should any liquid refrigerant get into the eyes, use a few drops of mineral oil to wash them out. Refrigerant 12 is rapidly absorbed by the oil. Next, wash the eyes with the weak solution of boric acid. Call your doctor immediately even though irritation has ceased after first aid treatment.

CAUTION: Do not heat refrigerant 12 above 125 degrees F.

In most instances, moderate heat is required to bring the pressure of the refrigerant in its container above the pressure of the system when charging or adding refrigerant. A bucket or large pan of hot water not over 125 degrees F. is all the heat required

for this purpose. Do not heat the refrigerant container with a blow torch or any other means that would raise temperature and pressure above this temperature. Do not weld or steam clean on or near the system components or refrigerant lines.

CAUTION: Keep Refrigerant 12 containers upright when charging the system.

When metering Refrigerant 12 into the refrigeration system, keep the supply tank or cans in an upright position. If the refrigerant container is on its side or upside down, liquid refrigerant will enter the system and damage the compressor.

CAUTION: Always work in a well-ventilated room.

Always maintain good ventilation in the working area. Always discharge the refrigerant into the service bay exhaust system or outside the building. Large quantities of refrigerant vapor in a small, poorly ventilated room can displace the air and cause suffocation.

Although Refrigerant 12 vapor is normally nonpoisonous, it can be changed into a very poisonous gas if allowed to come in contact with an open flame. Do not discharge large quantities of refrigerant in an area having an open flame. A poisonous gas is produced when using the flame-type leak detector. Avoid inhaling the fumes from the leak detector.

CAUTION: Do not allow liquid refrigerant to touch bright metal.

Refrigerant will tarnish bright metal and chrome surfaces. Avoid splashing refrigerant on any surface. Refrigerant in combination with moisture is very corrosive and can cause great damage to all metal surfaces.

TEST 1

TEST SYSTEM PRESSURE

(Engine not Running)

Install the gauge set manifold. For identification of test hose connections at service ports see Figures (22 and 23). After tightening service port adapters, make sure that the needle valve located below the discharge pressure gauge is open. Purge air from the gauge hoses (Figs. 24 and 25) as follows:

(1) Open suction gauge valve momentarily, then close it.

(2) Open discharge gauge valve momentarily, then close it.

(3) Loosen compressor inlet suction hose connection at the manifold momentarily, then tighten it.

Step three not necessary with "Valiant" installations.

If vehicle has been parked and the air conditioning system not operating, gauge pressure should be normal for temperature of the system. Refer to the Temperature-Pressure Relationship Chart.

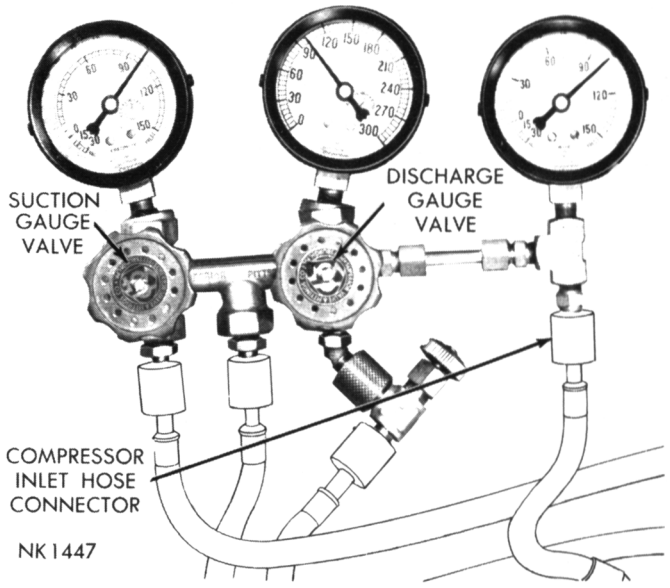

Fig. 24—Purge Gauge Hoses (Fury, VIP, and Satellite)

If no pressure is indicated on the gauges it means that the system is empty, due to a leak. It will be necessary to evacuate, charge with a sweep-test charge, locate and correct the leak, purge the test charge, replace the drier, vacuum the system and charge the system with the proper amount of Refrigerant 12.

If pressures are normal, proceed with the next test and adjustment.

TEST 2

REFRIGERANT LEVEL

The system must be operated at high blower speed, with vehicle doors and windows open, if the system is

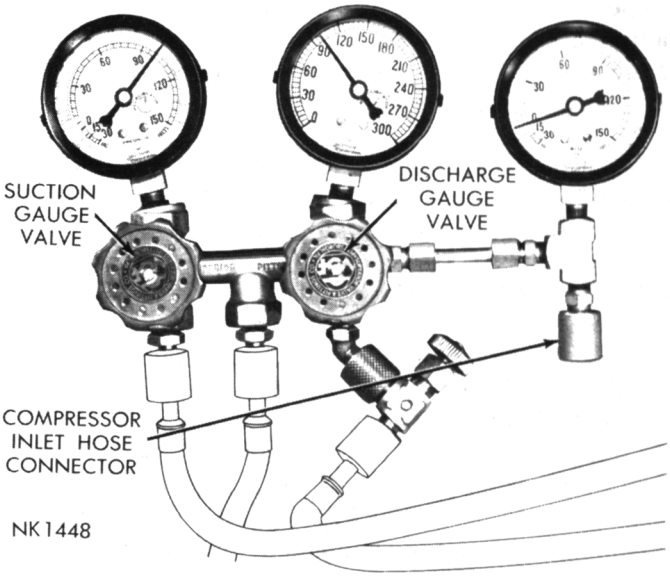

Fig. 25—Purge Gauge Hoses (Valiant)

TEMPERATURE-PRESSURE RELATIONSHIP CHART (FOR REFRIGERANT 12)

Temp. F.	Press. PSI	Temp. F.	Press. PSI	Temp. F.	Press. PSI	Temp. F.	Press. PSI	Temp. F.	Press. PSI
0	9.2	35	32.6	60	57.7	85	91.8	110	136.4
2	10.2	36	33.4	61	58.9	86	93.3	111	138.4
4	11.2	37	34.3	62	60.1	87	94.7	112	140.5
6	12.0	38	35.2	63	61.3	88	96.5	113	142.6
8	13.5	39	36.1	64	62.5	89	98.2	114	144.7
10	14.6	40	37.0	65	63.8	90	99.8	115	146.8
12	15.8	41	37.9	66	65.0	91	101.5	116	148.9
14	17.1	42	38.9	67	66.3	92	103.1	117	151.1
16	18.4	43	39.8	68	67.6	93	104.8	118	153.2
18	19.7	44	40.7	69	68.9	94	106.5	119	155.4
20	21.0	45	41.7	70	70.2	95	108.3	120	157.7
21	21.7	46	42.7	71	71.5	96	110.0	121	159.9
22	22.4	47	43.6	72	72.9	97	111.7	122	161.2
23	23.2	48	44.7	73	74.2	98	113.5	123	164.4
24	23.9	49	45.7	74	75.6	99	115.3	124	166.7
25	24.6	50	46.7	75	77.0	100	117.2	125	169.1
26	25.4	51	47.7	76	78.4	101	119.0	126	171.4
27	26.1	52	48.8	77	79.8	102	120.9	127	173.8
28	26.9	53	49.9	78	81.3	103	122.7	128	176.2
29	27.7	54	51.0	79	82.7	104	124.6	129	178.6
30	28.5	55	52.5	80	84.2	105	126.6	130	181.0
31	29.3	56	53.2	81	85.7	106	128.5	131	183.5
32	30.1	57	54.3	82	87.2	107	130.4	132	185.9
33	30.9	58	55.4	83	88.7	108	132.4	133	188.5
34	31.7	59	56.6	84	90.2	109	134.4	134	191.0

a dual system, both units must be operated simultaneously at high blower speed when this test is made, and when adding to the charge.

The sight glass is an integral part of the receiver-strainer-drier. The outlet line (liquid) from the condenser must be attached to the connection marked IN. The word IN is stamped on the top face of the inlet connection (Fig. 26). If the receiver-strainer-drier is reversed and the lines are connected wrong, the system must be purged, the lines reversed and the system recharged.

Block the air flow across the condenser to raise the discharge pressure to 225 to 250 psi, and check the sight glass for foam. There should be no foam. If sight glass is clear, remove the air restriction from the condenser and allow the discharge pressure to return to normal.

If the foam shows in the sight glass when the discharge pressure is 225 to 250 psi, it indicates the system is low on refrigerant. The proper amount of refrigerant required to complete a full charge may be added to the system as follows: Maintaining the discharge pressure at 225 to 250 psi, add refrigerant gas through the suction side of the system until foam is cleared from sight glass, then add exactly one-half (1/2) pound of refrigerant.

TEST 3

TESTING THE SYSTEM FOR LEAKS

The Leak Detector Torch Tool C-3569 is a propane gas-burning torch used to locate a leak in any part of the refrigeration system. Refrigerant gas drawn into the sampling or "snifter" tube will cause the flame to change color in proportion to the size of the leak. A very small leak will produce a flame varying from yellowish-green to bright green. A large leak

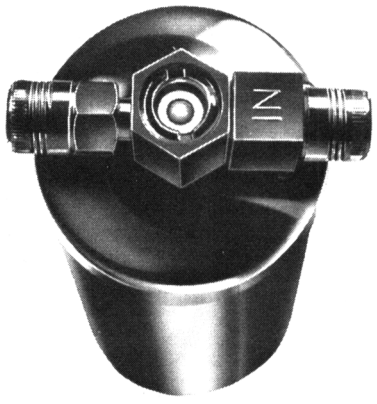

NF105

Fig. 26—Receiver Drier

will produce a brilliant blue flame.

(1) Open the torch valve until you hear a faint hiss of escaping gas. Light the test torch and adjust the valve until the flame is very small. A small flame will detect large as well as small leaks, whereas a large flame will detect only large leaks. As soon as the reaction plate seen through the window in the burner shield becomes red hot, the tester is ready for use.

(2) Examine all tube connectors and other possible leak points by moving the end of the sampling hose from point to point. Since Refrigerant 12 is heavier than air, it is good practice to place the open end of the sampling hose directly below the point being tested. Be careful not to pinch the sampling tube since this will shut off the air supply to the flame and cause a color change.

(3) Watch for a change in the color of the flame. Small leaks will produce a green color and large leaks a bright blue color. If leaks are observed at tube fittings, tighten the connection, using the proper flare wrenches, and retest.

CAUTION: Do not use the lighted detector in any place where explosive gases, dust or vapors are present.

Do not breathe the fumes that are produced by the burning of refrigerant gas. Large concentrations of refrigerant in the presence of a live flame become dangerously toxic. Observe the flame through the window of the burner shield, not through the top of the shield.

If the flame remains bright yellow when the tester is removed from possible leak point, insufficient air is being drawn in through the sampling tube, or the reaction plate is dirty.

Remove Sweep-Test Charge

If the system is free of leaks; or after correcting a leak, and if no air conditioning components have been removed, add the necessary refrigerant as described under TEST 4 "Correcting Low Refrigerant Level." If any parts of the refrigerant system were disconnected, remove the sweep test charge. Close the refrigerant manifold valve so that any refrigerant remaining in the container is sealed. Remove the long test hose from the refrigerant manifold. Insert the free end of this test hose into an exhaust system outlet. Open the right-hand gauge set manifold valve a fraction of a turn to let the sweep-test charge escape slowly. Allow the system to discharge until the discharge pressure gauge registers zero. Open the left-hand gauge valve to allow any refrigerant trapped in the suction side of the system to escape.

TEST 4

CORRECTING LOW REFRIGERANT LEVEL

Since the refrigeration system is completely sealed, refrigerant level will not be low unless there is a leak in the system or refrigerant has been allowed to escape by depressing one of the service port valves. For detailed instructions on the proper procedure for checking refrigerant level, refer to "Refrigerant Level" TEST 2.

Before adding refrigerant where cause of low level is not known, the system should be tested for leaks. Assuming no leaks are present, or that leaks have been corrected without discharging the system, proceed with partial charge.

Install and connect gauge set manifold valves (Figures 27 and 28).

(1) Close both of the gauge set manifold valves. Open the gauge set manifold needle valve.

(2) Connect the suction gauge test hose to the suction service port of the compressor.

On **"Valiant"** installations, install the suction gauge test hose to the compressor inlet service port.

On all models connect the discharge gauge test hose to the discharge service port of compressor.

(3) Connect one end of long test hose to center manifold outlet, other end to refrigerant dispensing manifold.

(4) Close two of the dispensing manifold valves and open remaining dispensing manifold valve. Remove protective cap from opened valve.

(5) Screw a can of Refrigerant 12 to the opened manifold valve. Be sure gasket is in place and in good condition. Tighten refrigerant can and manifold locking nut to insure a good seal. Do not over-tighten since 6 to 8 foot-pounds is sufficient if gasket is in good condition.

(6) Turn manifold valve (above the refrigerant can) completely clockwise to puncture the can. This closes the valve and seals the refrigerant in the can.

(7) Place the refrigerant in a large pan of water heated to 125°F. Place pan of water containing the refrigerant can on an accurate scale Tool C-3429 so that the amount of refrigerant added can be weighed. Open the refrigerant manifold valve.

(8) Purge all air from test hoses. Air in the system will be trapped in the condenser causing abnormally high discharge pressures and interfering with condensing of the refrigerant.

(9) Loosen both test hoses at the gauge set manifold. Tighten the hoses as soon as the air is purged.

(10) Loosen charging hose connection at gauge set manifold. This will purge air from the charging hose. Tighten connection as soon as air is purged.

(11) With vehicle windows open and hood up, operate engine as shown in following chart:

(12) Push in "A/C" button, fan switch on high. On dual installation both blowers must be on high speed during charging operation.

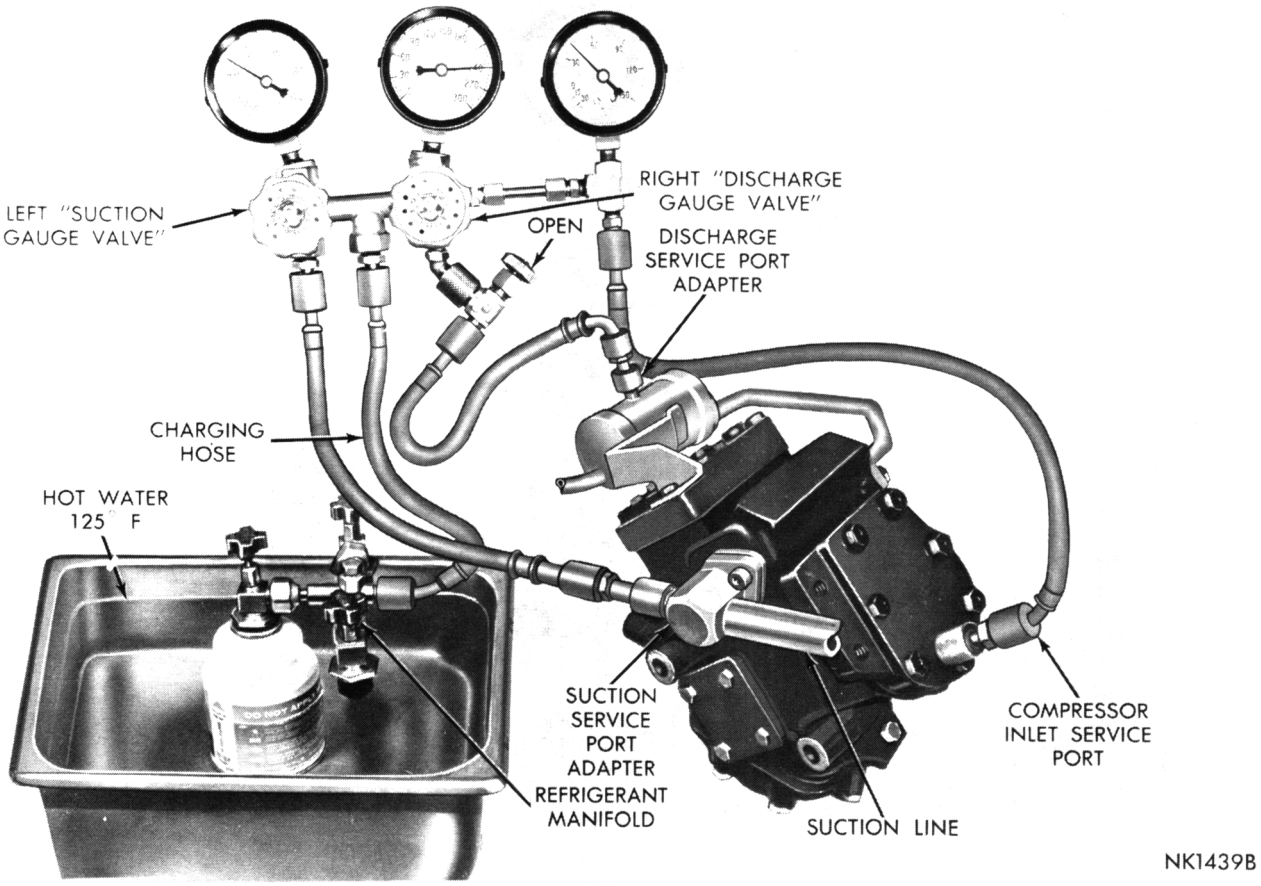

Fig. 27—Adding Partial Charge (Fury, VIP and Satellite)

	Engine	Engine R.P.M.
Fury, VIP and Satellite	6 Cyl.	1600
	8 Cyl.	1300
Valiant	6 Cyl.	1250
	8 Cyl.	1000

On Valiant installations, push in the "A/C" button and fan switch on high.

(13) If necessary, block the condenser to maintain a discharge pressure of 225 to 250 psi. The system must be charged through the evaporator suction service port as follows:

(a) Slowly open the suction service gauge valve. Meter flow of refrigerant by adjusting the suction service gauge valve so that pressure registered at the suction service gauge does not exceed 50 psi. **Keep refrigerant container upright.**

(b) Add refrigerant gas until there is no foam visible at the sight glass. As soon as all foam clears, note the weight registered on the refrigerant scale.

(c) Watch the refrigerant weighing scale and add **exactly** 1/2 pound more refrigerant to the system. Close the suction gauge valve. **Too much refrigerant in the system can cause abnormally high discharge pressures. Care must be used so that exactly 1/2 pound of refrigerant is added after foam clears in the sight glass.**

(d) Close dispensing manifold valve. Remove test hoses and adapters from the service ports of compressor, and install protective caps at service ports.

TEST 5

OVER-ALL PERFORMANCE TEST

Humidity (the amount of moisture in the air) has an important bearing on the temperature of the air delivered to the vehicle's interior. This is true of all air-conditoned systems whether in the home, office or vehicle. It is important to understand the effect humidity has on the performance of the system. When humidity is high, the evaporator has to perform a double duty. It must lower the air temperature and the temperature of the moisture carried in the air. Condensing the moisture in the air transfers a great deal of heat energy into the evaporator fins and tubing. This reduces the amount of heat the evaporator can absorb from the air. In other words, high humidity greatly reduces the evaporator's ability to lower the temperature of the air delivered to the vehicle interior.

Evaporator capacity used to reduce the amount of moisture in the air is not wasted. Wringing some of the moisture out of the air entering the vehicle adds

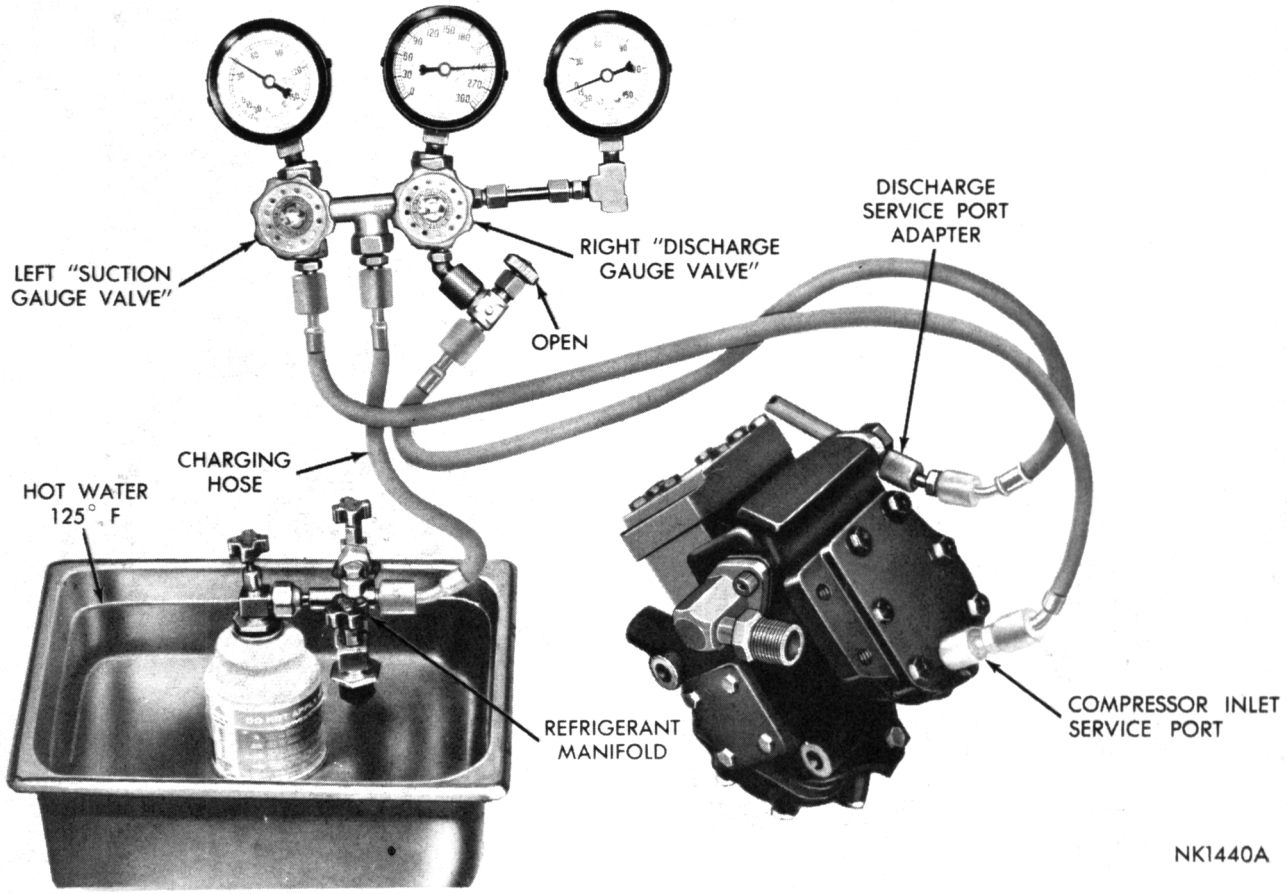

Fig. 28—Adding Partial Refrigerant Charge (Valiant)

materially to the comfort of the passengers. However, an owner may expect too much from his air-conditioning system on humid days. A performance test is the best way to determine whether or not the system is performing up to standard. This test also provides valuable clues to the possible cause of trouble.

The preliminary inspections in TESTS 1 thru 4, outlined previously, should be made before the "Over-All Performance Test." Install gauge set as shown in Figures 22 and 23. **Air temperature in test room must be 75°F. minimum for this test.**

FRONT UNIT PERFORMANCE TEST

Start the engine, open the windows, temperature control lever must be in the off position.

Push in "A/C" button, fan switch on high. Open all grille outlets. **When testing the front unit of a dual system, leave roof unit blower turned off.**

Valiant installations—push in "A/C" button and move fan switch to high. Open grille outlets.

	Engine	Engine R.P.M.
Fury, VIP and Satellite	6 Cyl.	1600
	8 Cyl.	1300
Valiant	6 Cyl.	1250
	8 Cyl.	1000

Adjust engine RPM as outlined in the following chart:

Arrange gauge set manifold hoses and tachometer leads to allow hood to be lowered, then close hood.

Place motor-driven psychrometer Tool C-3704 at cowl inlet opening. Distilled water should be used with this meter to prevent drying out and hardening the wet sock.

Place thermometer Tool C-3623 fully into right outlet grille opening. The left outlet should be fully extended and directed towards rear of vehicle.

Operate the air-conditioning system until a stabilized condition on the gauges and thermometers has been established. One of the most important steps in making the over-all performance test is that the engine must be operated at the RPM as indicated on the above chart for approximately five minutes to allow all the under-hood components of the system to reach their operating temperature.

Partially close the needle valve, located below the discharge pressure gauge, to minimize oscillation of the pointer. Do not close the needle valve completely since this would prevent the discharge pressure gauge from registering pressure.

This test should be performed with the discharge

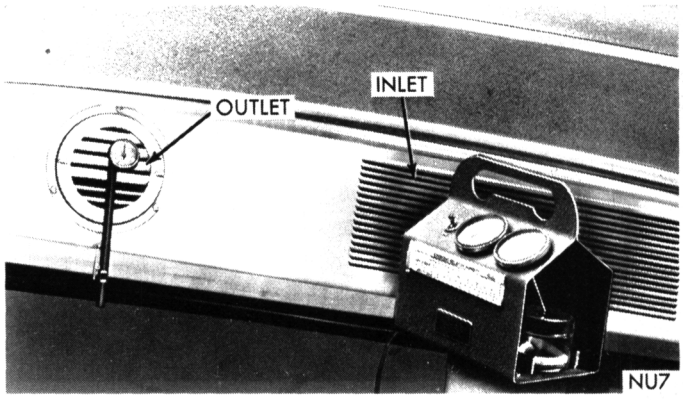

Fig. 29—Roof Unit Performance Test

pressure from 190 to 210 psi. The 190 to 210 pound pressure is for **test purposes only.** To increase pressure restrict the air flow across the condenser using cardboard or paper. To decrease pressure, increase air flow across condenser with external floor fans.

Observe and record both the "Inlet Dry Bulb Temperature" and "Inlet Wet Bulb Temperature" as registered on the psychometer.

Observe and record "Discharge Air Temperature" registered by thermometer at right hand grille outlet.

From the appropriate "Performance Temperature Chart," for vehicle and type installation being tested (Figs. 30 thru 33), determine the maximum allowable discharge air temperature for the prevailing "Dry" and "Wet" bulb temperatures recorded. If the vehicle's discharge air temperature is at or below the temperature given on the Performance Chart, the air-conditioning is delivering its cooling capacity. However, to assure trouble-free operation, continue with the "Evaporator Pressure Regulator Test 6."

If discharge air temperature at the outlet grilles is above the maximum allowable on Performance Chart, perform the "Evaporator Pressure Regulator and Expansion Valve Test" until proper performance is obtained.

ROOF UNIT PERFORMANCE TEST

The method used to test the roof unit of a dual installation is essentially the same as for a front unit. The front unit should be tested before testing the roof unit. When testing the roof unit of a dual system, turn the front unit off by pushing the "OFF" button. Connect a jumper from the positive terminal of the battery to the compressor so that the refrigeration part of the entire system can be operated without air-flow through the front unit.

Open the windows, adjust engine speed to 1600 rpm for 6 cylinder engines and 1300 rpm for 8 cylinder engines and close the hood. Turn roof unit blower motor switch to "high" speed position.

Place motor-driven psychrometer Tool C-3704 near roof unit air outlet grille and a thermometer Tool C-3623 in right-hand air outlet grille (Fig. 29).

Operate the air-conditioning system until a stabilized condition on the gauges and thermometers has been established. One of the most important factors in making the over-all performance test is that the engine must be operated at 1600 rpm for 6 cylinder engines and 1300 rpm for 8 cylinder engines for a sufficient time to build up to operating temperatures and allow all the under-hood components of the system to be subjected to the under-hood operating temperatures for a period of time.

Partially close the needle valve, located below the discharge pressure gauge, to minimize oscillation of the discharge gauge point. Do not close the needle valve completely since this would prevent discharge pressure gauge from registering discharge pressure.

Read the discharge pressure on the gauge. This test should be performed with the discharge pressure from 190 to 210 psi. The 190 to 210 pound-pressure is for test purposes only. These pressures change according to the ambient temperature, humidity and the efficiency of the entire system.

Take the necessary steps to bring and maintain the

SINGLE UNIT

INLET AIR WET BULB TEMPERATURE

55	56	57	58	59	60	61	62	63	64	65	66	67	68	69	70	71	72	73	74	75	76	77	78	79	80	81	82	83	84	85	86	87	88	89	90
41	42	43	44	45	46	47	48	49	50	50	50	51	51	52	52	53	53	53	54	54.	55	56	57	58	59	59	60	62	64	66	67	68	69	70	71

DISCHARGE AIR DRY BULB TEMPERATURE

INLET AIR DRY BULB TEMPERATURE MUST BE BETWEEN 75° AND 110°F NK1342A

Fig. 30—Performance Temperature Chart—Single Unit Fury, VIP and Satellite

FRONT UNIT OF DUAL

INLET AIR WET BULB TEMPERATURE

55	56	57	58	59	60	61	62	63	64	65	66	67	68	69	70	71	72	73	74	75	76	77	78	79	80	81	82	83	84	85	86	87	88	89	90
43	44	45	46	47	48	49	50	51	52	52	52	53	53	54	54	55	55	55	56	56	57	58	59	60	61	61	62	64	66	68	69	70	71	72	73

DISCHARGE AIR DRY BULB TEMPERATURE

INLET AIR DRY BULB TEMPERATURE MUST BE BETWEEN 75° AND 110°F NK1343A

Fig. 31—Performance Temperature Chart—Front Unit Only Fury and VIP

ROOF UNIT OF DUAL

INLET AIR WET BULB TEMPERATURE

55	56	57	58	59	60	61	62	63	64	65	66	67	68	69	70	71	72	73	74	75	76	77	78	79	80	81	82	83	84	85	86	87	88	89	90
52	53	54	55	56	57	58	59	60	61	61	61	62	62	63	63	64	64	64	65	66	67	68	69	70	71	71	72	74	76	78	79	79	80	80	81

DISCHARGE AIR DRY BULB TEMPERATURE

INLET AIR DRY BULB TEMPERATURE MUST BE BETWEEN 75° AND 110°F NK1344A

Fig. 32—Performance Temperature Chart—Roof Unit of Dual Fury and VIP

discharge pressure within these limits.

To increase the discharge pressure, restrict the air flow across the condenser using cardboard or paper. In high ambient temperatures and high humidity areas, it may be necessary to put an electric fan in front of the condenser in order to keep the pressure down to these limits.

Observe and record both the "Inlet Dry Bulb Temperature" and "Inlet Wet Bulb Temperature" as registered on the psychrometer.

Observe and record "Discharge Air Temperature" registered by the thermometer at right-hand grille outlet.

From the appropriate Roof Unit Performance Temperature Chart for vehicle and type installation being tested (Figs. 30 thru 33), determine the maximum allowable discharge air temperature for the prevailing "Dry" and "Wet" bulb temperatures. If the

SINGLE UNIT

INLET AIR WET BULB TEMPERATURE

55	56	57	58	59	60	61	62	63	64	65	66	67	68	69	70	71	72	73	74	75	76	77	78	79	80	81	82	83	84	85	86	87	88	89	90
40	41	42	43	44	45	46	47	48	49	50	50	51	51	52	52	53	53	54	54	55	56	57	58	59	60	61	62	64	66	68	69	70	71	72	73

DISCHARGE AIR DRY BULB TEMPERATURE

INLET AIR DRY BULB TEMPERATURE MUST BE BETWEEN 75° AND 100°F NK1341A

Fig. 33—Performance Temperature Chart—Single Unit Valiant

discharge air temperature is at or below the temperature given on the Performance Chart, the roof unit is delivering its rated cooling capacity.

If the discharge air temperature at the outlet grilles is above the maximum allowance on the "Performance Chart," perform the Evaporator Pressure Regulator and Expansion Valve Test," until proper performance is obtained.

TEST 6

EXPANSION AND EPR TEST (In Car)

SINGLE UNIT

Test must be made at room ambient temperature of 75°F., under hood temperature 86°F. minimum.

After performing tests 1 through 5 conduct the Expansion Valve and EPR (Evaporator Pressure Regulator) Valve Test as follows:

(a) Close the windows and operate the engine at the rpm shown below. Set air conditioning controls for "Max A/C", high blower and temperature control lever to full reheat position.

Set RPM's at:

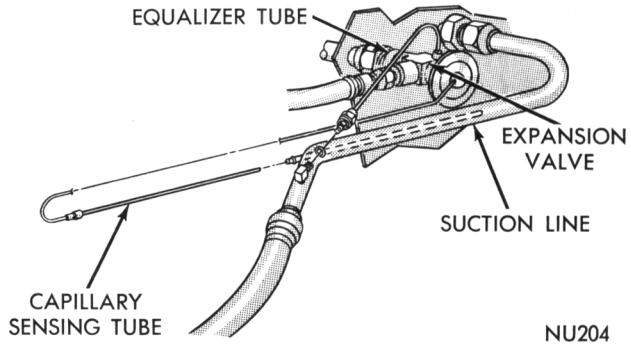

Fig. 34—Expansion Valve Details (Typical)

800 for all 8 cylinder engines.

900 for 6 cylinder engines.

(b) Operate the system for at least five minutes to obtain partial stabilization and sufficient reheat to load the system. Pressure at the discharge service port should reach 140-210 psi. If this pressure cannot be obtained, check the pressure drop across the EPR valve as described in paragraph (D) and replace if necessary. If EPR valve is satifactory (open), proceed with steps (C), (E) and (F).

(c) Remove the expansion valve thermo bulb from its internal well in the suction line (Fig. 34) and hold it in your hand for several minutes until the suction pressure stabilizes. The evaporator suction pressure

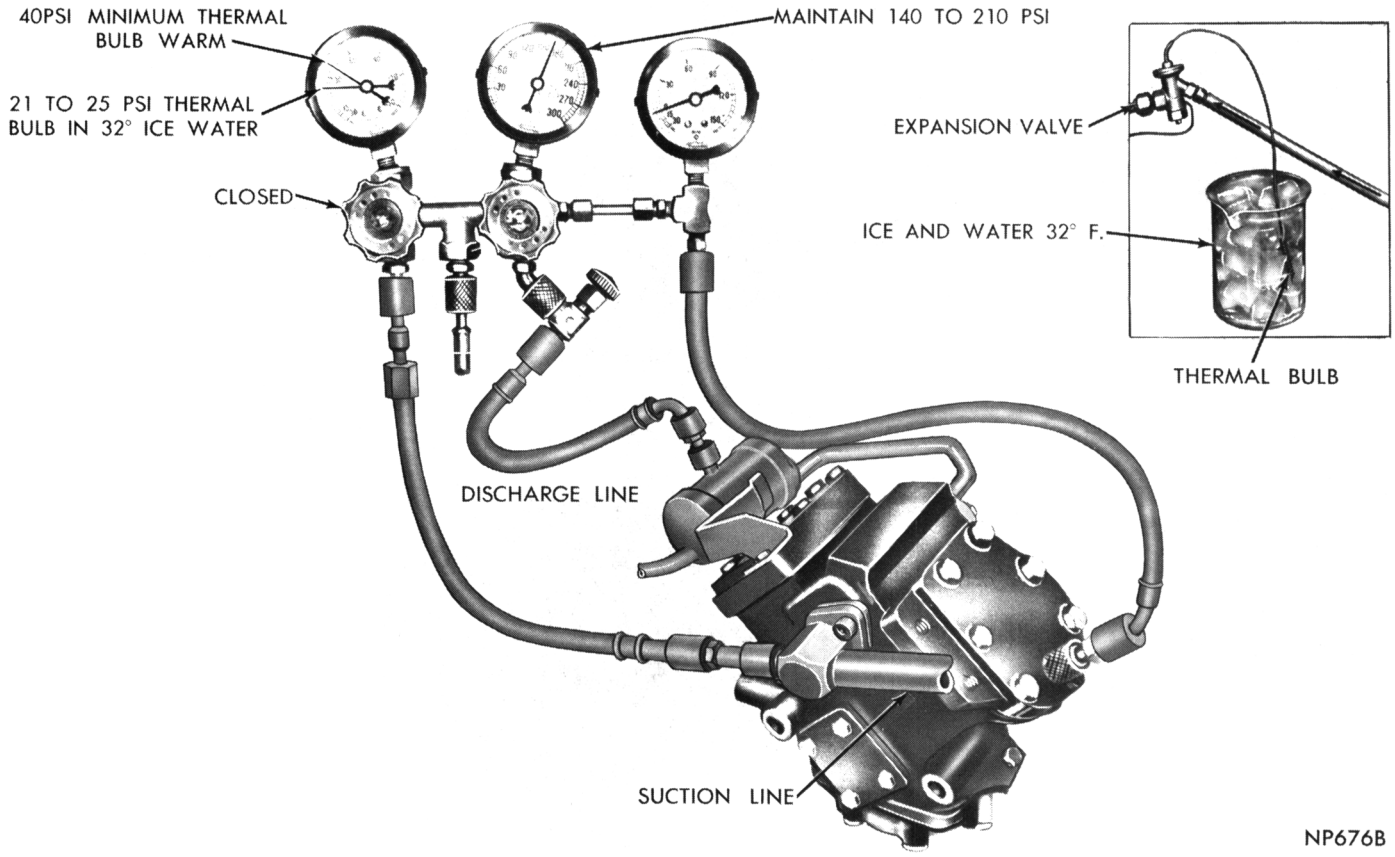

Fig. 35—Expansion Valve and EPR Valve Test

should read a minimum of 40 psi. Any expansion valve which does not produce this reading is faulty and should be replaced.

(d) The EPR valve should now be wide open, and the pressure drop across it should be no greater than 1-4 psi. The pressure drop can be established by the difference between evaporator and compressor inlet pressures. If the pressure drop is greater than 1-4 psi, the EPR valve is faulty, and should be replaced.

(e) Remove the expansion valve thermo bulb from its internal well and immerse it 5 inches into a container 32°F ice and water (Fig. 35). The evaporator suction pressure should now read 21-25 psi. If the evaporator suction pressure does not pull down to 25 psi, then either the compressor or the expansion valve is faulty. To determine which is the bad component, raise the engine speed to 1750 RPM. If the evaporator suction pressure now reduces to 21-25 psi range, the expansion valve is operating satisfactorily, but the compressor is faulty.

(f) Immerse the expansion valve in 32°F ice water. If the evaporator suction pressure reads 21 to 25 psi, the compressor inlet pressure should be 17 psi or less. If the compressor inlet pressure is higher than 17 psi, the EPR valve should be replaced.

If the expansion valve passes Tests A through F, then the compressor valve plate should be removed and the gaskets and valves inspected. Replace gaskets and any damaged valve plate assemblies. **Make sure that all of the old gasket material is removed from the valve plates, cylinder head and crankcase before rebuilding the compressor.** For "Roof Unit Expansion Valve and EPR Test," see Page 66.

SERVICE PROCEDURES

HANDLING TUBING AND FITTINGS

Kinks in the refrigerant tubing or sharp bends in the refrigerant hose lines will greatly reduce the capacity of the entire system. High pressures are produced in the system when it is operating. Extreme care must be exercised to make sure that all connections are pressure tight. Dirt and moisture can enter the system when it is opened for repair or replacement of lines or components. The following precautions must be observed.

The system must be completely discharged before opening any fitting or connection in the refrigeration system. Open fittings with caution even after the sys-

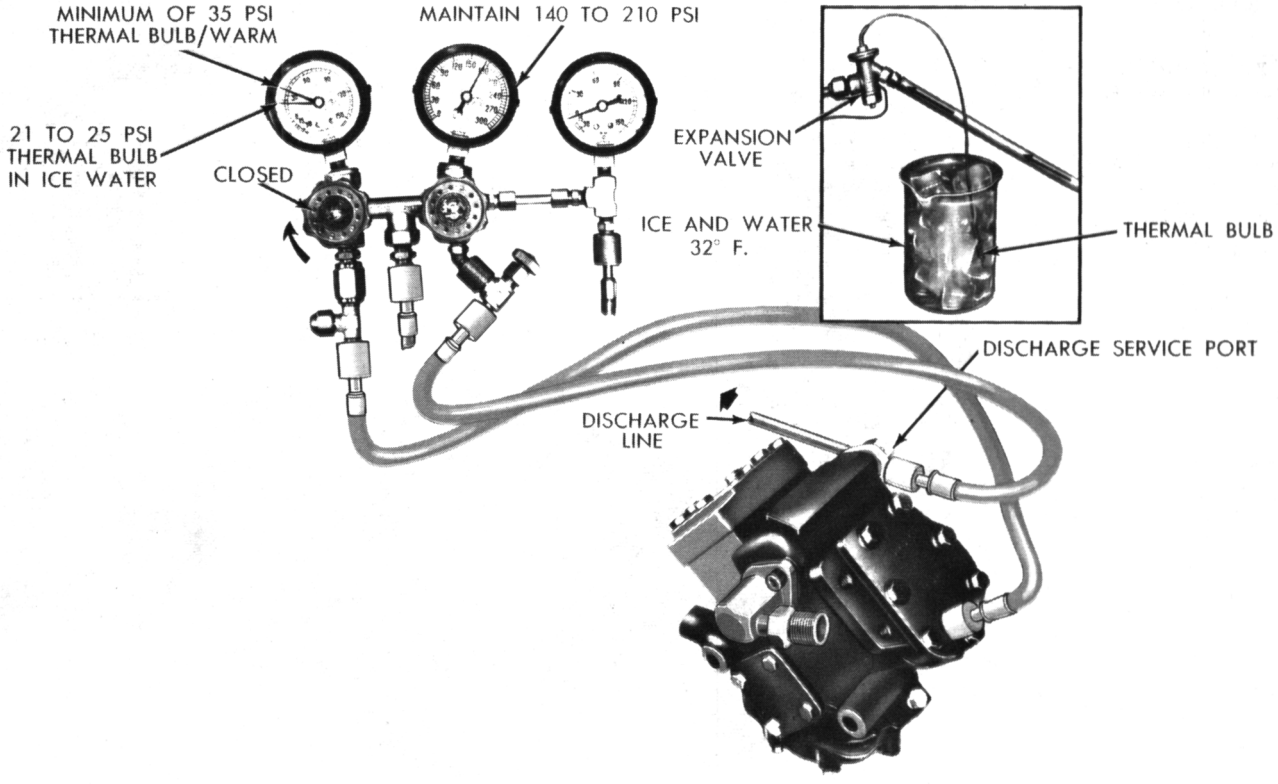

Fig. 36—Expansion Valve Test—Valiant

tem has been discharged. If any pressure is noticed as a fitting is loosened, allow trapped pressure to bleed off very slowly. Use a suitable tube bender Tool C-3362 when bending the refrigerant lines to avoid kinking. **Never attempt to rebend formed lines to fit. Use the correct line for the installation you are servicing.**

A good rule for the flexible hose lines is keep the radius of all bends at least 10 times the diameter of the hose. Sharper bends will reduce the flow of refrigerant. The flexible hose lines should be routed so that they are at least 3 inches from the exhaust manifold. It is good practice to inspect all flexible hose lines at least once a year to make sure they are in good condition and properly routed.

"O" rings and fittings must be in good condition. The slightest burr or foreign material may cause a leak. "O" rings and fittings must be coated with refrigerant oil to allow the connections to seat squarely and to be tightened evenly to the proper torque. Fittings which are not oiled with refrigerant oil are almost sure to leak (Fig. 37).

The use of proper wrenches when making connections is very important. Improper wrenches or improper use of wrenches can damage the fittings. Always use two wrenches when loosening or tightening tube fittings to prevent distorting of lines and components.

The internal parts of the refrigeration system will remain in a state of chemical stability as long as pure-moisture-free Refrigerant 12 and refrigerant oil is used. Abnormal amounts of dirt, moisture or air can upset the chemical stability and cause operational troubles or even serious damage if present in more than minute quantities.

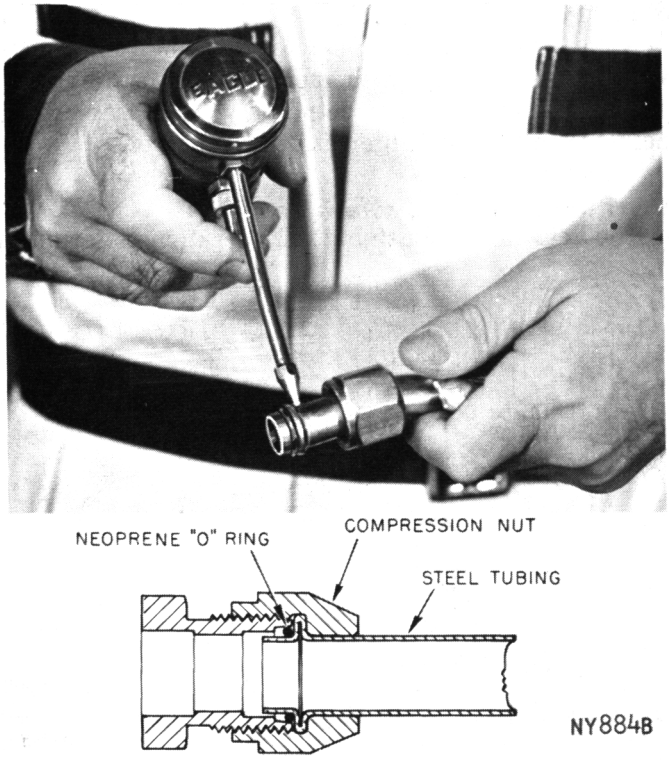

Fig. 37—Lubricate with Refrigerant Oil—Typical

When it is necessary to open the refrigeration system, have everything you will need to service the system ready so that the system will not be left open any longer than necessary. Cap or plug all lines and fittings as soon as they are opened to prevent the entrance of dirt and moisture. All lines and components in parts stock should be capped or sealed until they are ready to be used.

All tools, including the refrigerant dispensing manifold, the gauge set manifold and test hoses should be kept clean and dry.

The special refrigeration oil supplied for the system is as clean and dry as it is possible to make it. **Only refrigeration oil** should be used in the system or on the fittings and lines. The oil container should be kept tightly capped until it is ready for use, and then tightly capped after use to prevent entrance of dirt and moisture. Refrigerant oil will quickly absorb any moisture with which it comes in contact.

COMPRESSOR DRIVE BELT ADJUSTMENT

Satisfactory performance of the air-conditioning system is dependent upon drive belt condition and tension. If the proper tensions are not maintained, belt slippage will greatly reduce air-conditioning performance and drive belt life. To avoid such adverse effects, the following service procedure should be followed:

(1) Any belt that has operated for a minimum of a half-hour is considered to be a "used" belt. Adjust air-conditioning drive belts at the time of new-car preparation. See Chart, "Accessory Belt Drives."

(2) Measure drive belt tension at regular service intervals using torque method, and adjust as needed.

(3) On all new-belt installations, new-belt tension specifications should be used when the belt is first installed to obtain proper tension. Thereafter, these replacement belts should be serviced according to the above procedure. Always replace belts in pairs if so equipped, otherwise the old belt will have insufficient tension and the load will be primarily on the new belt. See Chart, "Accessory Belt Drives," "Group 7 Cooling."

ANTIFREEZE RECOMMENDATIONS

The Air-Conditioning System requires the engine's cooling system to be protected to +15°F. with a permanent type antifreeze for summer operation. This is to prevent freezing of the coolant in the heater core.

However, this protection does not provide sufficient corrosion inhibitors for the engine cooling system. Summer protection to —15°F. will provide adequate inhibitors for protection of engine cooling system against corrosion.

In the springtime, after the winter's operation with the cooling system protected with permanent-type antifreeze for the temperatures of the area, it is suggested the system be drained and flushed out with water. When draining, flushing and refilling, have the temperature control lever in the extreme hot position so the heater core is drained, flushed and refilled. Install a gallon of permanent type antifreeze in the system, and add enough water to fill the system.

Do not re-use the old antifreeze. The permanent type antifreeze does not lose its antifreeze qualities during the winter season operation, but the chemical inhibitors for rust and corrosion prevention are weakened and finally exhausted by extended use. Do not add new inhibitor to used antifreeze in hope of revitalizing the used antifreeze.

The chemical inhibitors come in various chemical compositions, some are compatible, some neutralize each other, and some form violent reactions to each other causing foaming and other undesirable reactions. Play it safe and use new permanent-type antifreeze.

RADIATOR PRESSURE CAP

All air conditioned vehicles must be equipped with a 15 to 16 psi radiator cap.

A radiator pressure cap testing below these specifications will permit loss of coolant during a hard pull on a hot day, or in slow moving traffic, or when the engine is stopped on a hot day.

Test the radiator pressure cap, using Tool C-4080 (Fig. 38). Before assembling adapter and radiator pressure cap to the pump, dip radiator cap and both ends of adapter into clean water to assure a tight seal.

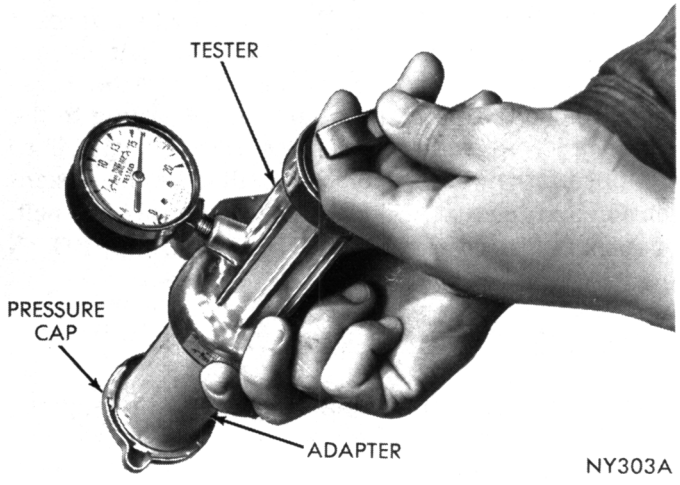

Fig. 38—Radiator Cap Tester

Hold the assembled tester in a vertical position with the radiator cap downward, (Fig. 38). Stroke the tester pump plunger until the gauge indicates the pressure cap is relieving pressure. It must relieve at a pressure between 14 to 17 psi. If within these specifications, reinstall on the radiator. **These test specifications are for caps tested at average altitudes. In high altitudes, the test specifications are lowered about one (1) psi for each 2,000 feet above sea level.**

If the radiator cap does not test within these specifications, replace it with a cap that does.

VACUUM CONTROL SYSTEM ADJUSTMENTS AND TESTS (Fury, VIP and Satellite Models)

Linkage Adjustment

Fury and VIP

With vacuum applied to pot side of air conditioning door actuator, place the air conditioning door in full open position and defroster door in full closed position. Then tighten adjustment screw on linkage to dimension shown in Figure 39.

Linkage Adjustment

(SATELLITE Models)

With the air conditioner door in the full open position and vacuum applied to the top of the air conditioner and heater door vacuum actuators, raise the heater door vacuum actuator mounting bracket until the levers **A, B,** and **C** touch; then, tighten the bracket mounting nuts (Fig. 40).

Apply vacuum to shaft side of air conditioner door vacuum actuator and with vacuum applied to top side of heater door vacuum actuator, apply pressure at points **D** and **E** and tighten adjustment screw.

Vacuum Control System Test

The test of the push-button operation determines

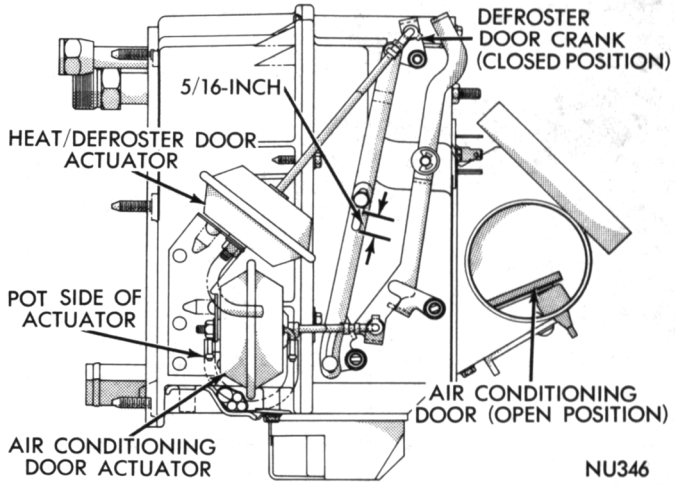

Fig. 39—Linkage Adjustment (Fury and VIP)

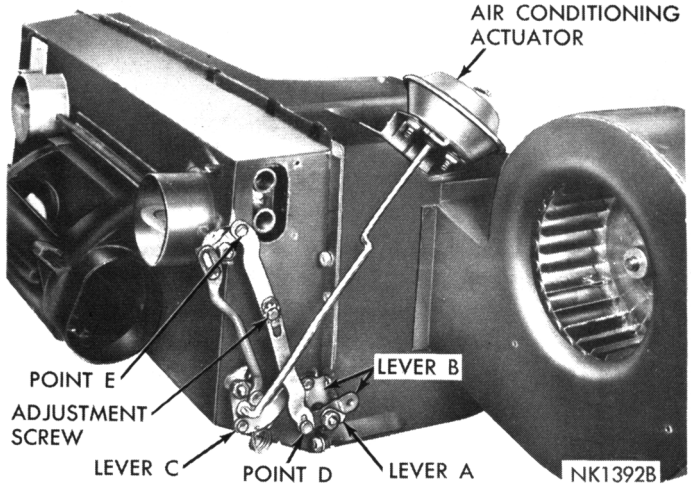

Fig. 40—Linkage Adjustment (Satellite Models)

whether or not the vacuum and electrical circuits are properly connected and the controls are functioning properly. However, it is possible that a vacuum control system that operates perfectly at the high vacuum provided at engine idle speed may not function properly at high engine speeds. Before starting this test, stop engine and make certain the vacuum source hose at engine intake manifold is tight on its connector.

Start vacuum pump (Tool C-3652) and connect to the vacuum test set (Tool C-3707). Adjust bleed valve on test set to obtain exactly 8 inches of vacuum with a finger blocking the prod on end of test hose (Fig. 41).

It is essential that the bleed valve be adjusted so the vacuum gauge pointer will return to exactly 8 inches when the prod is covered by a finger. Otherwise a false reading will be obtained when the control circuit is tested.

CAUTION: Alternately release and reblock the hose prod several times. Make sure the bleed valve is adjusted so the vacuum gauge pointer returns to exactly 8 inches of vacuum when the prod is covered with a finger.

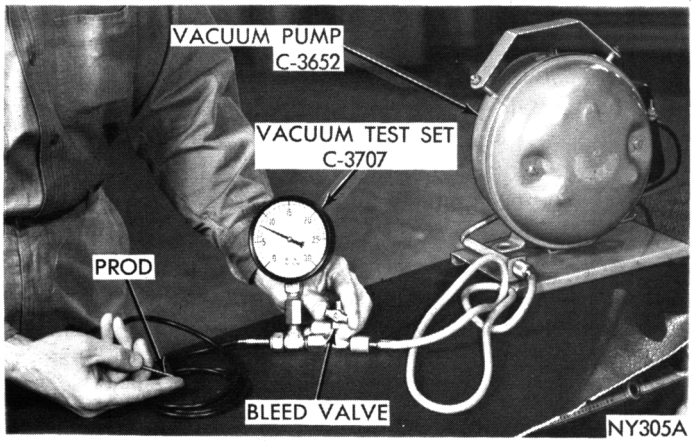

Fig. 41—Adjust Vacuum Test Bleed Valve

Disconnect engine vacuum source hose at engine intake manifold and insert vacuum tester hose prod into source hose leading to control switch. Place vacuum gauge on the cowl so it can be observed from the driver's position as push buttons are operated.

Start the test by pushing the "HEAT" button. Vacuum tester gauge needle will drop until the actuator has operated, and then will return to 8 inches. Note how much the vacuum drops below 8 inches. Continue to push buttons; "Off," "Max. A/C" "A/C," "Defrost" and "Heat" allowing time for actuators to operate after each button is pushed, and note the vacuum drop below 8 inches after each operation. The maximum allowable vacuum drop below 8 inches after each operation is 3/4 inch.

If the vacuum drop is more than 3/4 inch, first recheck the tester for reading exactly 8 inches. If correct, inspect the fit of the 7-hole hose connector plug on the control switch (Fig. 42). This plug must be positioned all the way on the 7 prods on the control switch.

CAUTION: Do not use lubricant on the switch prods or in the holes in the plug, as lubricant will ruin the vacuum valve in the switch. If it is impossible to properly position the connector plug all the way on the switch prods, put a drop or two of clean water in the holes of the connector plug. This will allow the plug to slide completely on the switch prods.

If vacuum drop is now within limits, proceed with the over-all performance test. If vacuum drop is still in excess of 3/4 inch, remove connector plug from the switch. Insert the vacuum test prod alternately in each of the connector holes except the source hose connector hole (Fig. 43). Note amount of vacuum drop **below** 8 inches after each actuator has operated. If vacuum test gauge comes back to 8 inches at each of the 6 holes, the hoses and actuators are not leaking. The control switch is faulty and must be replaced. If excessive vacuum drop shows up at one or more holes in connector block, isolate faulty hose or actuator.

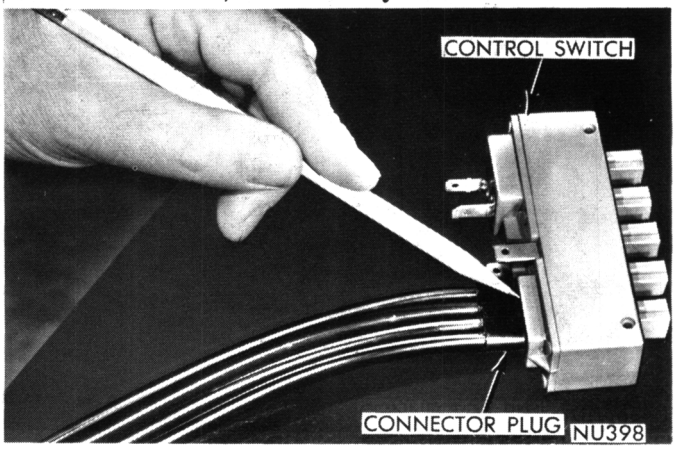

Fig. 42—Push Button Vacuum Test

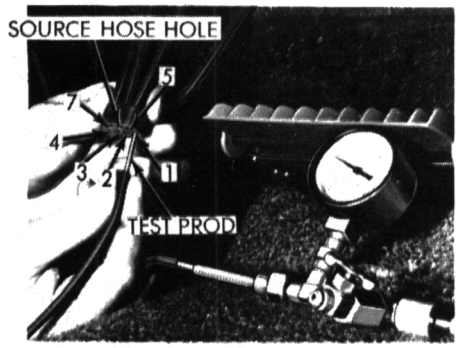

Fig. 43—Vacuum Tube Assembly Test

Inspect hose connections to the actuator involved. Then test whether actuator or hose is at fault; use the test hose on the actuator involved (Fig. 44).

A leak in a hose may be detected with leak tester by running the fingers along the hose and watching vacuum gauge reading. A faulty spot may be cut out and the hose spliced, using 1/8 inch 00 copper tubing.

A vacuum drop in excess of 3/4 inch below the 8 inches needed in this test would not interfere with the engine operation, other than perhaps to cause a rough idle. It could, however, interfere with the proper operation of the air-conditioning and heating controls at high speeds and during acceleration.

VACUUM CONTROL SYSTEM ADJUSTMENTS AND TESTS

Recirculating Door Linkage (Valiant and Barracuda)

To adjust the recirculation door, remove the glove box, push the "Max A/C" (Maximum Air Conditioning) button in. Vacuum will then be applied to the top of the fresh air recirculation actuator closing the fresh air door, opening the recirculating door (Fig. 45).

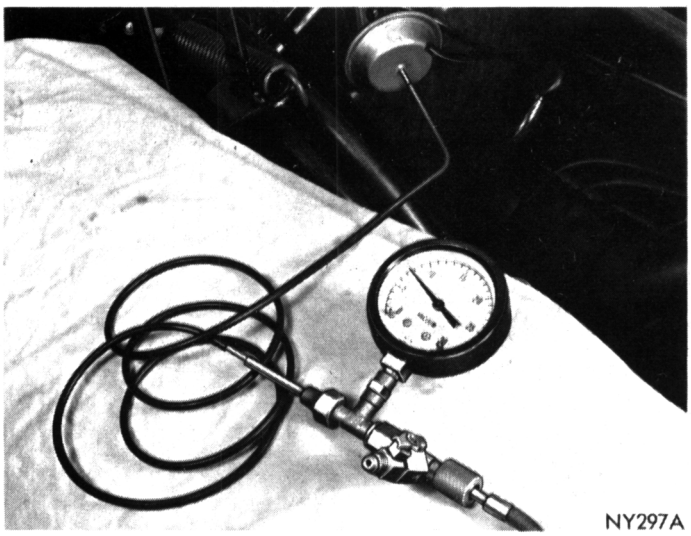

Fig. 44—Vacuum Actuator Test

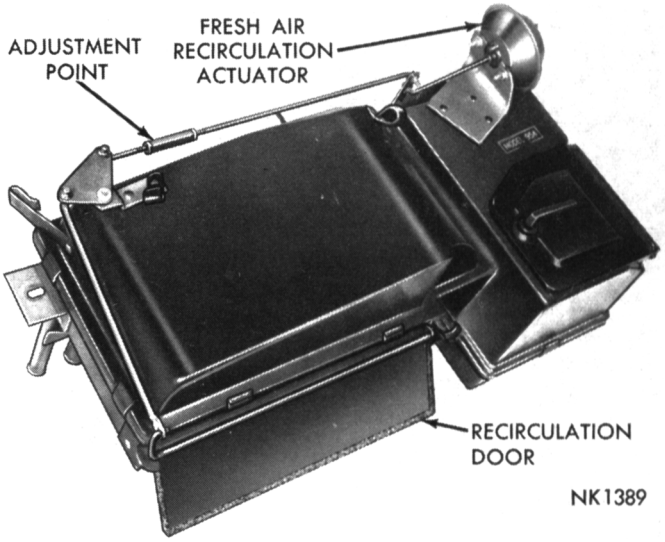

Fig. 45—Recirculating Door Linkage

The top connecting rod has a turnbuckle nut and lock nut. The length of the rod can be adjusted by using two 7/16 inch open-end wrenches. The recirculating door should be adjusted to give the **maximum** possible opening when the fresh air door is completely closed. Push in the "A/C" (Air Conditioning) button and inspect to see that the recirculating door has moved to its fully closed position. Install the glove box.

Vacuum Control System Test

The test of the push-button operation determines whether or not the vacuum and electrical circuits are properly connected and the controls are functioning properly. However, it is possible that a vacuum control system that operates perfectly at the high vacuum provided at engine idle speed may not function properly at high engine speeds. Before starting this test, stop the engine.

Start the vacuum pump, Tool C-3652, and connect to the vacuum test set, Tool C-3707. Adjust the bleed valve on the test set to obtain exactly 8 inches of vacuum, with a finger blocking the prod on the end of the test hose (Fig. 46).

It is absolutely essential that the bleed valve be adjusted so the vacuum gauge pointer will return to exactly 8 inches when the prod is covered by a finger. Otherwise a false reading will be obtained when the control circuit is tested.

CAUTION: Alternately release and reblock the hose prod several times. Make sure the bleed valve is adjusted so the vacuum gauge pointer returns to exactly 8 inches of vacuum when the prod is covered with a finger.

Disconnect the engine vacuum source hose at the engine intake manifold and insert the vacuum tester hose prod into the source hose leading to the control switch. Place the vacuum gauge on the cowl so it can

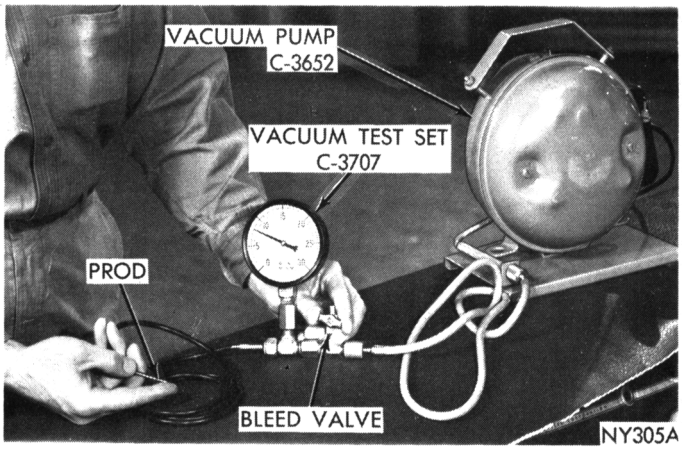

Fig. 46—Adjust Vacuum Test Bleed Valve

be observed from the driver's position as the push buttons are operated.

Start the test by pushing the "Def" (Defroster) button. The vacuum tester gauge needle will drop until the actuator has operated, and then will return to 8 inches. Continue to push button "Heat," "A/C," "Max A/C," and "Off" allowing time for actuators to operate after each button is pushed, and note the vacuum drop below 8 inches after each complete operation. The maximum allowable vacuum drop is 3/4 inch after each complete operation.

If the vacuum drop is more than 3/4 inch, first recheck the tester for reading exactly 8 inches. If correct, inspect the fit of the 7-hole connector plug on the control switch (Fig. 47). This plug must be positioned all the way on the 7 prods on the control switch.

CAUTION: Do not use lubricant on the switch prods or in the holes in the plug, as lubricants will ruin the vacuum valve in the switch. If it is impossible to properly position the connector plug all the way on the switch prods, put a drop or two of clean water in the holes of the connector plug. This will allow the plug to slide completely on switch prods.

If vacuum drop is now within limits, proceed with

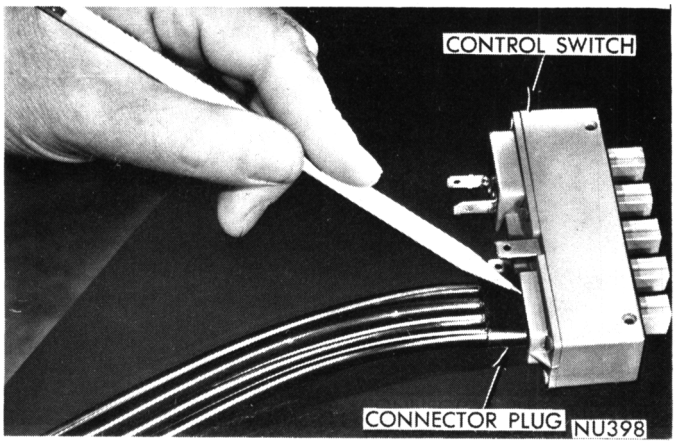

Fig. 47—Connector Plug Installed

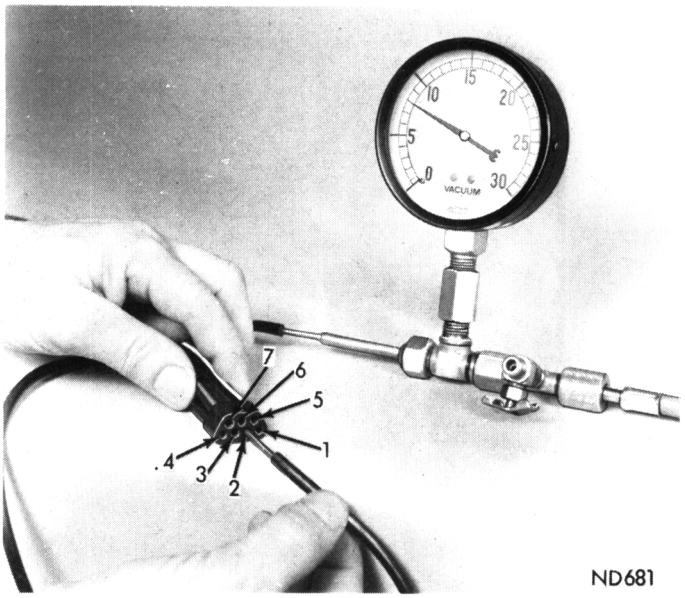

Fig. 48—Vacuum Tube Assembly Test

1. Fresh Air Door Closed
2. Defroster Door Open
3. Fresh Air Door Open
4. Defroster Door Closed
5. A/C Inlet Door Closed
6. Vacuum Source
7. A/C Inlet Door Open

TEST 1, "Test System Pressure." If vacuum drop is still in excess of 3/4 inch, remove connector plug from switch. Insert the vacuum test prod alternately in each of the connector holes except the source hose connector hole (Fig. 48). Note the amount of vacuum drop below 8 inches after each actuator has operated. If the vacuum test gauge comes back to 8 inches at each of the 6 holes, the hoses and actuators are not leaking. The control switch is faulty and must be replaced. If excessive vacuum drop shows up at one or more holes in the connector plug, isolate the faulty hose or actuator.

If the vacuum drop occurs at number 5 or 7 holes, first check the tee connectors under the instrument panel that tie numbers 5 and 7 to 8 and 9 respectively. Number 8 and 9 hoses operate the water valve actuator. Test whether the actuator or hose is at fault; use the test hose on the actuator involved (Fig. 49).

MAGNETIC CLUTCH

Two types of magnetic clutches (Figs. 50 and 51) are used. Both use a stationary electromagnet attached to the compressor. Since the electromagnet does not rotate, collector rings and brushes are eliminated.

Testing Electromagnet Current Draw

To test the coil for a short or open circuit, connect an ammeter (0-10 ampere scale) in series with a fully charged 12 volt battery and the field coil lead. The current draw at 12 volts and 68° temperature should be as follows:

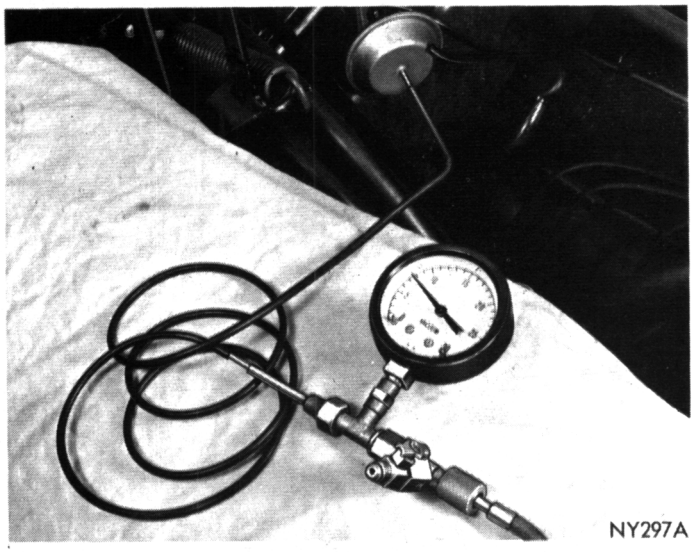

Fig. 49—Vacuum Actuator Test

2.7 to 3.3 amperes for Warner (Copper Wire).

4.0 to 4.6 amperes for Warner (Aluminum Wire).

Note: Housings on Aluminum coils bear the letter "AL".

3.5 to 4.2 amperes for Pitts (Electro-Loc) on 383 and 440 Cu. In. Engine and 2.9 to 3.3 amperes on all others.

Removal (All)

(1) Loosen and remove the belts. Disconnect clutch field lead wire at the connector.

(2) Remove the special locking bolt and the washer from the compressor crankshaft at the front center of the clutch.

(3) Insert a 5/8"-11 x 2-1/2" cap screw into the threaded portion of the hub assembly.

(4) Support clutch with one hand, then tighten cap screw until clutch is removed.

(5) Remove the three hexagon head screws attaching the clutch field assembly to the compressor and lift off the assembly.

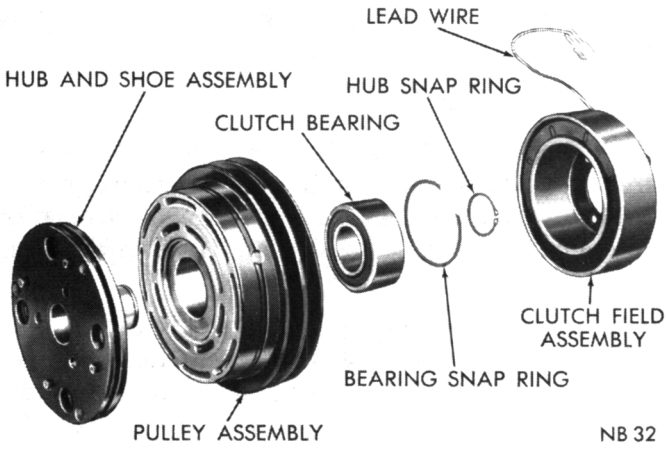

Fig. 50—Warner Clutch Plate Type

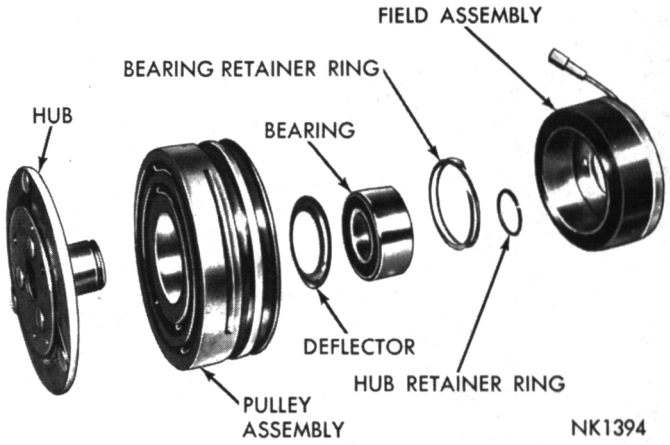

Fig. 51—Pitts Electro-Loc Clutch

Installation (All)

(1) Install clutch field coil assembly on the base of compressor bearing housing. Make sure coil assembly is positioned so lead wire points to left of compressor as viewed from the front. Install the three mounting screws and tighten to 17 inch-pounds.

(2) Insert woodruff key in the crankshaft.

(3) Insert clutch assembly on crankshaft.

(4) Install washer and a new self-locking bolt. Hold clutch from turning with a spanner wrench inserted in the holes of front bumper plate. Tighten to 20 foot-pounds.

(5) Connect field lead wire.

(6) Install belts and tighten to the specified tension.

Disassembly

(1) Remove the small snap ring from the drive hub with Tool C-3128 or equivalent.

(2) On Warner clutch, install drive hub puller Tool C-3787 aligning the three pins of the Tool in the three holes in the hub and shoe assembly. Tighten the hex head bolt down until the drive hub is removed from the bearing (Fig. 52).

(b) On Pitts Electro-Loc, install a bolt 5/8-11 X 2-1/2 inch into the rear of the hub and while holding the pulley in the hand use a soft hammer and drive hub from the pulley.

(3) Remove bearing snap ring from pulley.

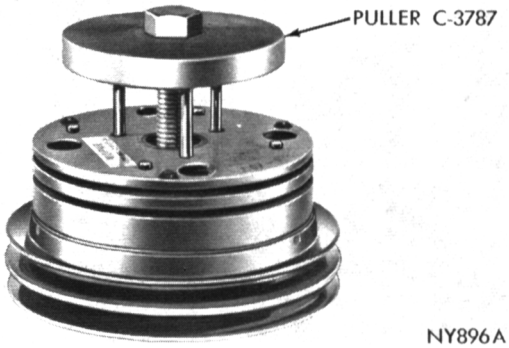

Fig. 52—Removing Hub and Shoe Assembly

(4) Place pulley assembly on an arbor press, with pulley side down, and bearing hub centered on Tool C-3835. Install Tool SP-3496 on inner race of bearing and press the bearing from pulley assembly (Fig. 53).

A new bearing must be installed every time the magnetic clutch is disassembled.

Assembly

(1) Install pulley assembly with pulley side up on an arbor press and insert a **new** bearing into the bore. Install Tool C-3807 against the bearing and press into position (Fig. 54).

(2) Install pulley assembly with pulley side facing down on Tool C-3807.

(3) Start drive hub into the inner bearing race, and press hub into position with an arbor press.

(4) Install bearing snap ring and hub snap ring.

CAUTION: The pulley assembly and hub assembly are mated parts. They are burnished at the factory before shipment. No attempt should be made to replace either unit separately as this may reduce the initial torque of the clutch.

SERVICING THE COMPRESSOR

The compressor is a two-cylinder, reciprocating-type designed specifically for the Chrysler Air-Conditioning System. Service parts are available so that the compressor can be repaired in the field.

Figure 55 is a disassembled view of the compressor with the nomenclature of the parts. Some parts are serviced individually and some are serviced in packages which include two or more service parts. Refer to the parts book for this information.

CAUTION: The refrigerant oil used in the compressor is carried through the entire system by the refrigerant. Some of this oil will be trapped and retained in the system when the refrigerant is discharged for testing or unit replacement. If the compressor is to be removed for repair or replacement, measure the refrigerant oil level in the compressor before the compressor is removed from the vehicle so that the same oil level can be established when the new or repaired compressor is installed on the vehicle.

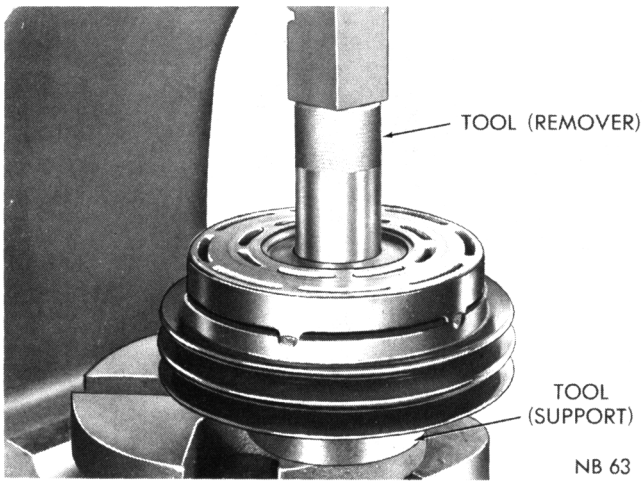

Fig. 53—Removing Bearing From the Pulley Assembly

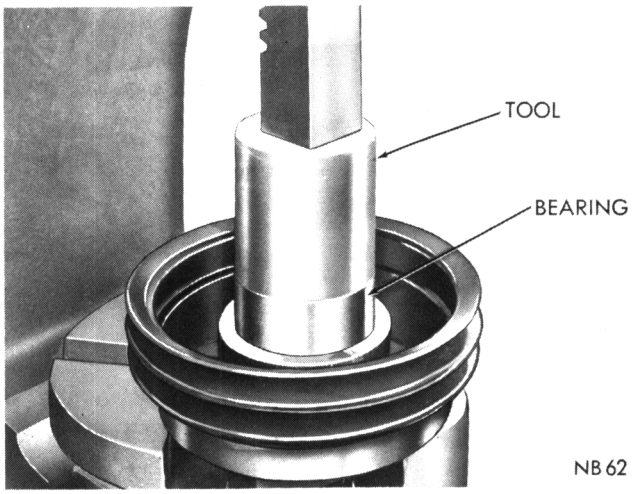

Fig. 54—Installing a New Bearing in the Pulley Assembly (Typical)

Too much refrigerant oil in the system can cause abnormal operating pressures and reduce the performance of the entire system.

Complete disassembly and assembly of the compressor must be performed with the compressor removed from the vehicle. On some models however, the valve plate and crankshaft gas seal assemblies can be repaired with compressor installed on vehicle.

CAUTION: The system must be completely discharged before attempting to perform any disassembly or repair service to the compressor. Before bleeding system down, cover clutch with a cloth to prevent contamination of clutch pole faces.

Before disassembling the compressor, clean exterior surfaces thoroughly.

Cleanliness is extremely important. The work area must be clean and free of air-borne dust and dirt. All parts must be thoroughly cleaned and blown dry before reassembly.

Do not use air to dry the crankshaft front main bearing. Wash bearing in **clean** mineral spirits and shake out all excess cleaning fluid. Saturate bearing with **clean refrigerant oil** and assemble immediately. Any dirt in the front main bearing assembly will cause noisy operation and possible damage to bearing.

CAUTION: Before reassembly of any unit, all contact surfaces must be liberally coated with clean refrigerant oil. Refrigerant oil must be kept in a sealed container until ready for use to prevent entrance of moisture and dirt. Never use engine oil as a substitute for refrigerant oil.

EPR Valve (Evaporator Pressure Regulator) Removal (System Discharged)

(1) Remove the two "EPR" Valve suction line fit-

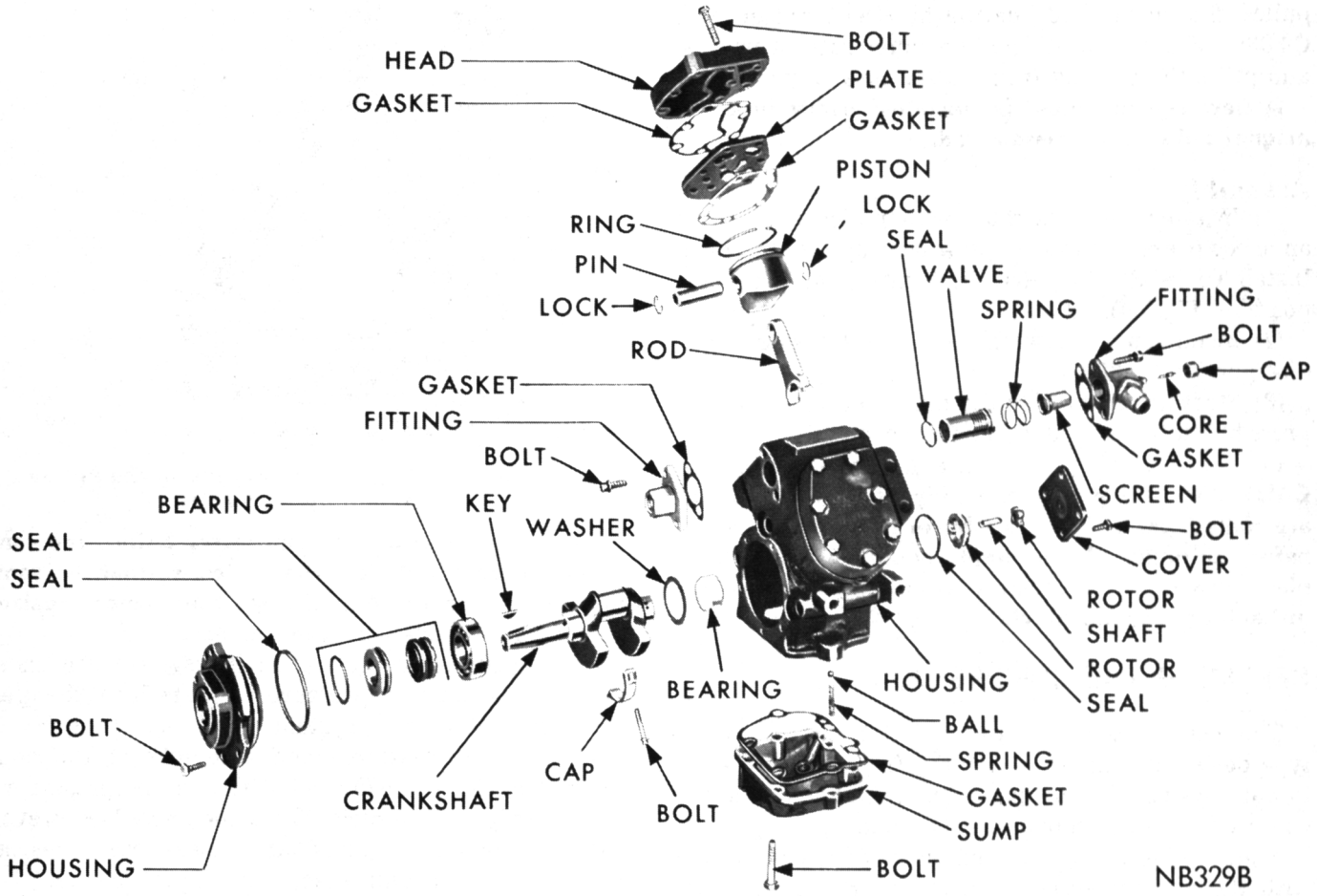

Fig. 55—Compressor Disassembled

ting bolts, the fitting which also contains the compressor suction screen, spring, and the gasket.

(2) Remove the "EPR" Valve and "O" ring from the compressor using Tool C-3822 by rotating the valve coonterclockwise slightly (Fig. 56).

CAUTION: Do not handle the "EPR" Valve more than necessary. The valve should be inspected externally and wiped clean with a lint-free cloth. Place the valve in a plastic bag until ready to be installed.

Installation

(1) Install new "O" ring on the "EPR" Valve.

(2) Lubricate "O" ring with refrigerant oil and install "EPR" Valve in the compressor with Tool C-3822 while rotating the valve counterclockwise.

(3) Install compressor suction screen in the "EPR" Valve suction line fitting.

(4) Install suction line fitting gasket, spring, fitting, and tighten the attaching bolts to 8 to 14 foot-pounds.

(5) Recharge System.

Compressor

Removal

(1) Discharge the system.

(2) Measure and record the refrigerant oil level so that the oil level of a replacement or repaired compressor can be adjusted to the **exact level in the compressor removed from the vehicle.** See "Oil Level."

(3) Disconnect suction line from suction muffler and the discharge line from the muffler fitting.

CAUTION: Plug or cap all the lines as soon as they

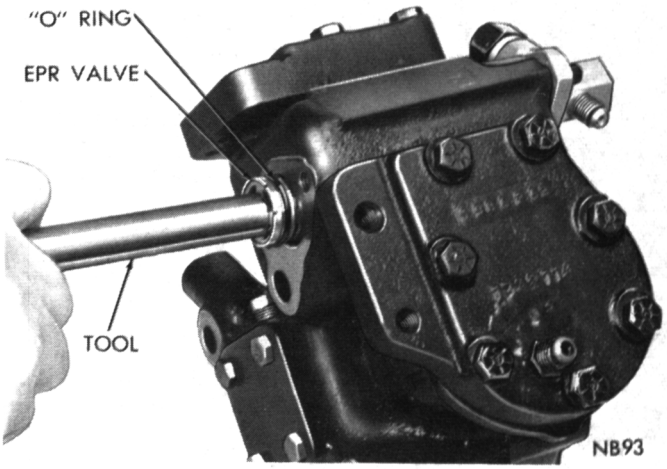

Fig. 56—Removing the EPR Valve

are disconnected to keep the moisture out of the system.

(4) Disconnect the magnetic clutch-to-control-unit wire.

(5) Loosen and remove compressor pulley belts.

(6) Remove the compressor-to-bracket attaching bolts, and remove compressor.

Installation

(1) Install the compressor to the bracket, and tighten the attaching bolts.

(2) Install compressor pulley belts.

(3) Connect magnetic clutch-to-control-unit wire.

(4) Remove the caps or plugs and connect the suction line to the suction muffler and connect discharge line to the muffler fitting.

CAUTION: When replacing the compressor assembly, the crankshaft should be rotated by hand at least two complete revolutions to clear oil accumulation from the compressor head before the clutch is energized to avoid damaging the compressor reed valves.

Oil Level—Compressor

When a new compressor is installed at the factory, the compressor contains 10 to 11 ounces of a special wax-free refrigerant oil. While the air conditioning system is in operation, the oil is carried through the entire system by the refrigerant. Some of this oil will be trapped and retained in various parts of the system. Consequently, once the system has been in operation, the amount of oil left in the compressor will always be less than the original charge of 10 to 11 ounces. **The compressor oil level should be checked as a matter of routine, whenever the refrigerant has been released from the system.**

(1) Operate the system for 15 minutes at 1000 engine rpm for eight cylinder engines and 1100 engine rpm for six cylinder engines. These engine settings will provide a compressor speed of approximately 1200 rpm.

(2) Open car windows and keep engine hood raised.

(3) Press the "A/C" button and turn blower switch to high. **On completion of the above operations, shut the air conditioning off, without changing any of the described settings.**

After the system has been bled down, wait ten minutes for refrigerant to boil off and then measure the oil in the compressor by inserting a dipstick (made up as shown in Figure 57) through the crankcase oil filler hole. Measure the height on the dipstick and determine the amount of oil in the unit by referring to the following chart: **Dipstick reading should be at least six ounces and not more than eight ounces.**

If the sump contains less than six ounces of oil, add fresh clean refrigerant oil to bring the level to the minimum shown in the table above. **Remove any oil in excess of eight ounces.**

Cubic Inch Engine	Dipstick Reading	
	Inches @ 6 ounces Minimum	Inches @ 8 ounces Maximum
225 Valiant, Barracuda	1-5/8"	2-1/8"
225 Fury, VIP		
225 Belvedere-Satellite	2-1/8"	2-3/4"
All 8 Cylinder engines	1-9/16"	2-3/8"
Compressor Set Vertically on Bench	1-9/16"	2-3/8"

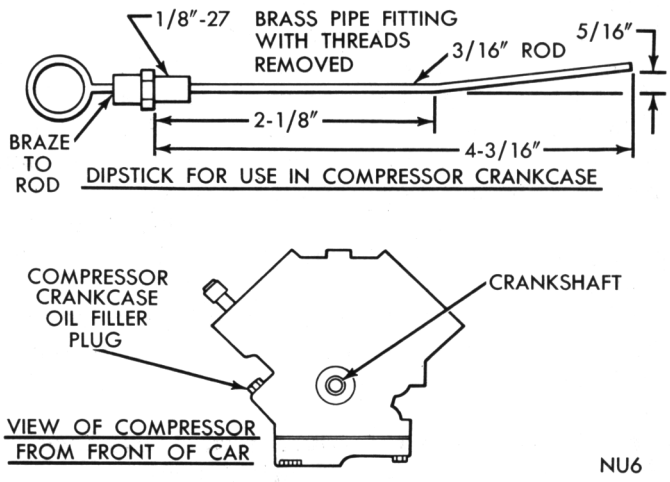

Fig. 57—Compressor Dip Stick Chart

Cylinder Head and Valve Plate Assembly Removal

Remove the cylinder head bolts, head and valve plate assembly. If plate does not separate from head, tap the removing lip on the valve plate lightly with a plastic hammer (Fig. 58). Do not pry apart.

Inspection

After removal of head, plate and gaskets, examine the valves. If valves are broken and the damage extends to cylinder bores, examine bores to see if they can be repaired by removing light scoring, scuffing or scratches with a crocus cloth. After conditioning cylinder bores, clean surfaces of cylinder block, valve plate and head thoroughly with mineral spirits.

Use care to remove all shreds of old gasket from plate, block and head surfaces. Clean attaching stud holes in the block. If valve plate or cylinder head is damaged, replace, using a complete compressor valve plate replacement package.

CAUTION: Do not touch or pry the reed valves.

Installation

(1) The valve plate and the cylinder head must be assembled with the reed assembly (Fig. 59).

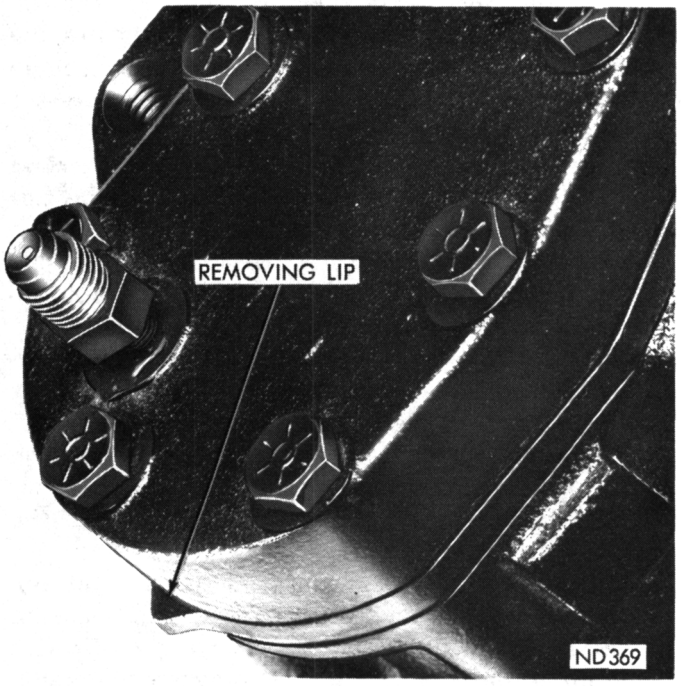

Fig. 58—Valve Plate and Head Removing Lip

(2) Using the pilot studs as a guide, install the valve plate gasket, valve plate, cylinder head gasket and cylinder head (Fig. 60).

(3) Install the attaching bolts. Tighten each bolt alternately and evenly to 18 to 24 foot-pounds (name plate bolts) and 20 to 26 foot-pounds on the remaining bolts.

Piston and Connecting Rod Removal

(1) Drain oil from compressor.

(2) Remove sump attaching bolts.

(3) Separate the sump from the case by tapping

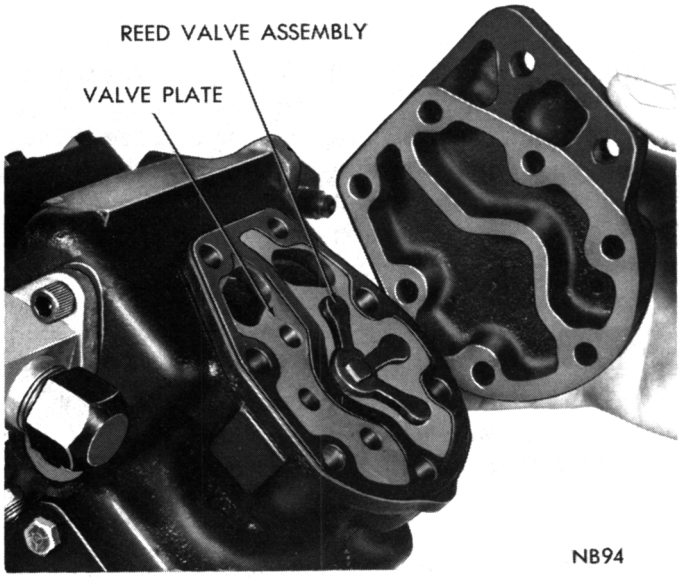

Fig. 59—Valve Plate—Installed Position

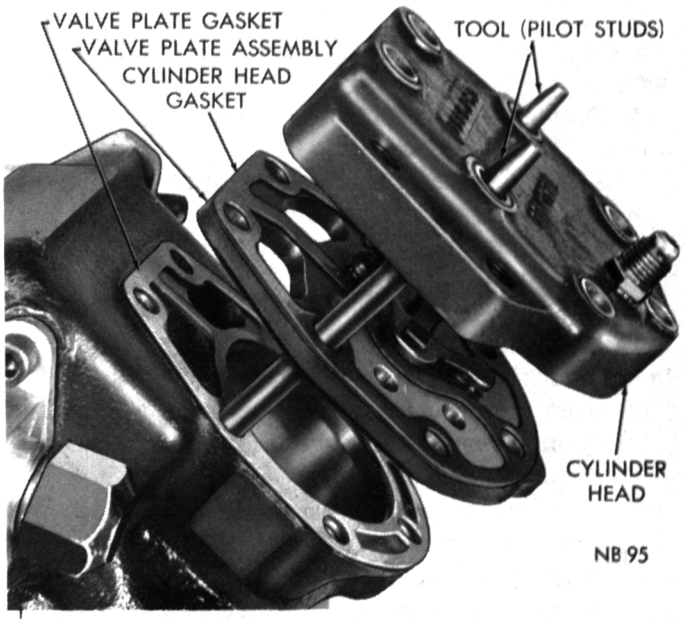

Fig. 60—Installing Valve Plate and Cylinder Head

with a plastic hammer being careful not to distort the oil pressure relief spring.

(4) Remove oil relief spring and (rubber) ball from crankcase.

(5) Remove cylinder heads and valve plates. **Before removing the pistons, rods or rod caps, mark all parts to insure reassembly in the original position.**

(6) Remove rod caps; remove piston and rod assembly from cylinder.

Inspection

Inspect piston and rings for score marks. Inspect rod bearing for pits and for chipping. Replace parts if damaged.

Installation

(1) Remove bearing cap and install piston in bore. Use piston ring compressor to prevent ring damage.

(2) Install bearing caps, and tighten screws 50 to 60 inch-pounds. Be sure each cap is installed in its original position.

(3) Install valve plates and cylinder heads.

(4) Turn compressor upside down. Install pilot studs, gasket, oil pressure relief ball and spring.

(5) Install the sump over pilot studs (Fig. 61) making sure the oil pressure relief spring depresses uniformly as the sump is lowered on the case.

(6) Tighten sump bolts finger tight to prevent spring misalignment, then tighten 14 to 20 foot-pounds.

(7) Refill with new refrigerant oil after the compressor is installed on vehicle. Do not re-use the oil that was previously drained.

Crankshaft Bearing Housing and Gas Seal Replacement (System Discharged)

The gas seal may be replaced with the compressor

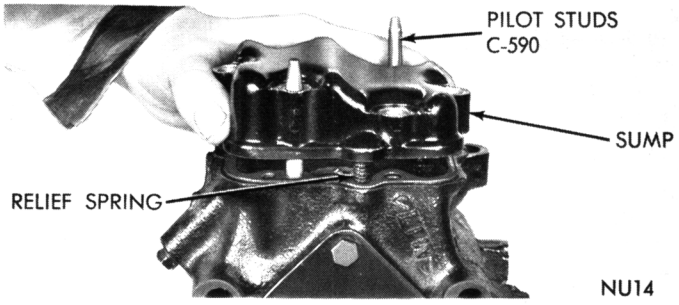

Fig. 61—Installing Compressor Sump

installed in the vehicle or with the compressor removed and placed on a workbench.

Special care should be taken when installing the new seal in a compressor mounted on the engine, that the carbon ring does not fall out of its housing. Adequate lubrication of the rotating seal assembly prior to installation on the compressor shaft, will prevent the carbon ring from falling out of place.

If the compressor has been removed from the vehicle, it should be placed on its back, to facilitate seal replacement.

The crankshaft gas seal replacement package consists of the crankshaft gas seal assembly and crankshaft bearing housing seal seat plate. Two types of crankshaft seals are supplied for service (Fig. 63). If the replacement package contains the cartridge-type seal, follow the entire installation procedure given below. If the replacement package contains the unitized type seals, follow the appropriate sections only.

Removal

(1) Loosen belt, remove clutch, coil and drive key.

(2) Remove crankshaft bearing housing seal bolts.

(3) Remove bearing housing from crankshaft, using two screwdrivers inserted in the slots provided, to pry the housing from the case (Fig. 62).

(4) Remove bearing housing oil seal.

(5) Remove gas seal seat plate from the bearing housing. This is part of the gas seal replacement package and must be replaced when the gas seal assembly is replaced.

(6) Clean the front bearing housing thoroughly.

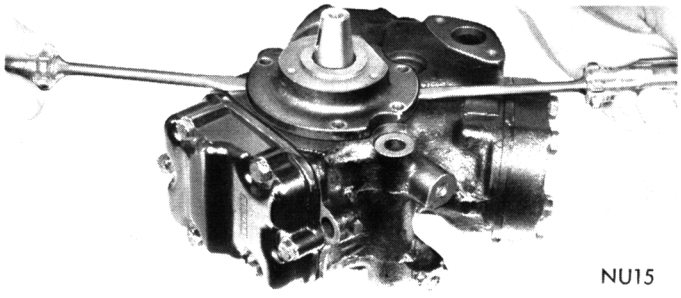

Fig. 62—Removing Crankshaft Bearing Housing

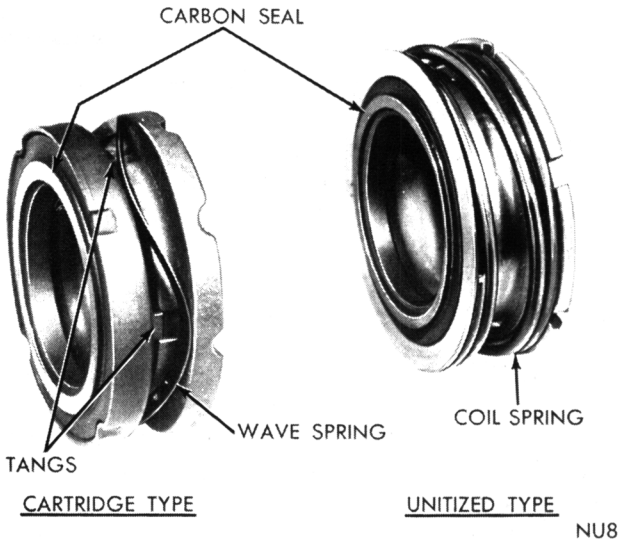

Fig. 63—Gas Seal Identification

Installation

(1) Immerse the new seal seat in clean refrigerant oil and install in the bearing housing with the smooth (micro finish) side up. Use a sleeve with the minimum inside diameter of 1-3/8″ to avoid damaging the micro finish sealing surface of the face plate. Tap the sleeve lightly until the seal seat is fully seated in the housing.

(2) Before installing the cartridge-type assembly, inspect the assembly to make sure that the tangs of the carbon seal are indexed in the slots of the mating, steel part (Fig. 63).

(3) Immerse the seal assembly in clean refrigerant oil, carbon ring up.

(4) Hold the seal assembly firmly at the outside edge, at the same time preventing the ring from coming out of position. Do not touch the sealing face of the carbon seal.

(5) When the seal bottoms against the crankshaft bearing, inspect the indexing tangs of the carbon ring again.

(6) Oil the bearing housing oil seal and install. (Make certain that the seal is evenly stretched into position.)

(7) Wipe the seal seat clean with a lint-free cloth, and re-oil with refrigerant oil.

(8) Install the bearing housing, taking care to ensure that the "nose" of the crankshaft does not touch the seal seat in the bearing housing.

(9) Insert 5, 1/4 x 20 screws and pull bearing housing squarely into position. This must be done 1/2 turn at a time per screw so that the ball bearing outer race will not be jammed by the bearing housing.

(10) Replace drive key in shaft.

(11) Assemble clutch to compressor and turn crankshaft by turning clutch armature. No more than 10

inch-pounds of torque should be required to turn crankshaft. If shaft is tight, remove clutch and loosen the bearing housing screws until shaft loosens up. Again, slowly tighten screws.

(12) Check the oil level which should meet the requirements of the oil check.

(13) Install clutch package on compressor, applying 20 ft-lbs. torque to tighten the clutch center mounting bolt. Install and tighten belts. Evacuate system and recharge.

Crankshaft and Ball Bearings

Removal

(1) Remove cylinder heads and valve plates.

(2) Remove pistons and connecting rods.

(3) Remove crankshaft bearing housing and gas seal. **The pistons and rods must be completely removed before the crankshaft removal.**

(4) Remove crankshaft and thrust washer from crankcase.

(5) To remove the crankshaft ball bearing, use a small arbor press. Make sure bearing is properly supported before pressing bearing from shaft.

Inspection

Clean and inspect all the parts. Replace questionable parts as required. If the crankshaft ball bearing is in good condition and clean, protect it against entry of dirt and re-use it. If bearing is serviceable but dirty, or there is evidence of dirt, clean it carefully with mineral spirits and shake dry. Saturate bearing with clean refrigerant oil and assemble immediately. If a new bearing is to be installed, leave it wrapped in its protective package until ready for installing. **Do not wash a new bearing assembly before installation. Do Not spin bearing with air.**

Installation

(1) Press crankshaft ball bearing on crankshaft using a sleeve which bears on inner race **only.**

(2) Install crankshaft, making sure the thrust washer is on the rear bearing journal before placing crankshaft in the crankcase.

(3) Rotate crankshaft to engage the oil pump shaft in the crankshaft slot.

(4) Install new gas seal and crankshaft bearing housing. Use a suitable tool, (Fig. 64) to assure free axial movement.

(5) Install pistons and connecting rods.

(6) After pistons and connecting rods are installed, turn the crankshaft to check freeness. Shaft should turn without binding.

(7) Install oil sump, valve plates and cylinder heads, using new gaskets.

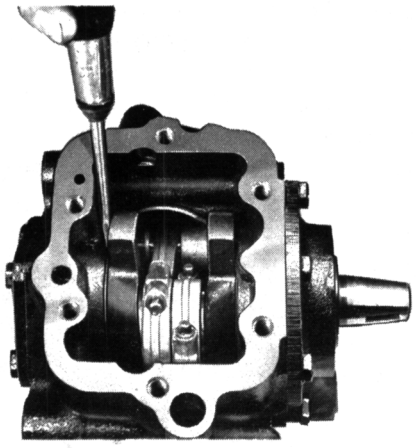

Fig. 64—Measuring Crankshaft Axial Movement

Oil Pump

Removal

To remove oil pump, it is not necessary to drain the refrigerant oil from the crankcase.

(1) Remove oil pump cover plate and oil seal.

(2) Remove drive shaft and rotors.

Installation

(1) Install oil pump drive shaft by rotating the shaft until tang end engages in the crankshaft slot.

(2) Install inner rotor on the drive shaft, engaging the drive.

(3) Install outer rotor, and rotate it until it will slide forward over inner rotor cams. Turn compressor crankshaft with the oil pump in this position to determine that rotors do not bind.

(4) Install oil pump cover plate and oil seal.

(5) Tighten bolts 8 to 14 foot-pounds.

Expansion Valve

Removal (Fury, VIP and Satellite)

The system must be completely discharged before opening any of the refrigerant lines.

(1) Disconnect equalizer from suction line fitting (Fig. 65).

(2) Disconnect expansion valve from liquid line and evaporator. Use two wrenches to loosen each of these connections.

(3) Carefully pull out capillary sensing tube from suction line well.

(4) Remove rubber seal from the capillary sensing tube. Inspect condition of inlet screen.

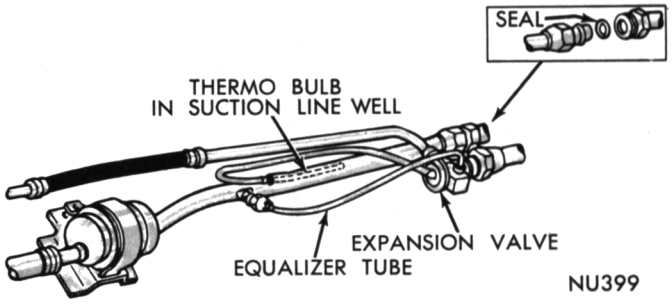

Fig. 65—Expansion Valve Details—Typical

Installation

(1) With new "O" rings and clean refrigerant oil on all fittings, connect expansion valve to liquid line and evaporator assembly using two wrenches to prevent rotation and twisting of the lines.

(2) Connect equalizer tube to the fitting on suction line.

(3) With a rubber seal on the capillary sensing tube, carefully insert the tube in the suction line well as far as it will go (approximately five inches).

(4) After expansion valve is installed, it must be completely tested and the system must be tested for leaks and recharged. **Do Not permit capillary line to touch air cleaner or distributor.**

HEATER CORE

Removal (Fig. 66)

The heater core is located in the front cover of the passenger side housing. To remove the heater core **only,** the air conditioning system need not be discharged or disconnected.

(1) Disconnect negative battery cable, drain cooling system, remove air cleaner and disconnect heater hoses.

(2) Plug both heater core tubes to prevent spilling coolant when core is removed.

(3) Remove steering column cover and left spot cooler duct.

(4) Disconnect two actuator rods at linkage on left side of housing, and remove two cover retaining screws.

(5) Remove five screws retaining heat distribution duct. When heat duct is removed, three screws in bottom lip of front cover will be exposed, remove these screws.

(6) Remove glove box and remove center spot cooler, air distribution housing and right spot cooler duct.

(7) From glove box opening, remove two top retaining screws and three screws from right side of housing.

(8) Disconnect wires at resistor block and vacuum hoses from recirculating housing actuator.

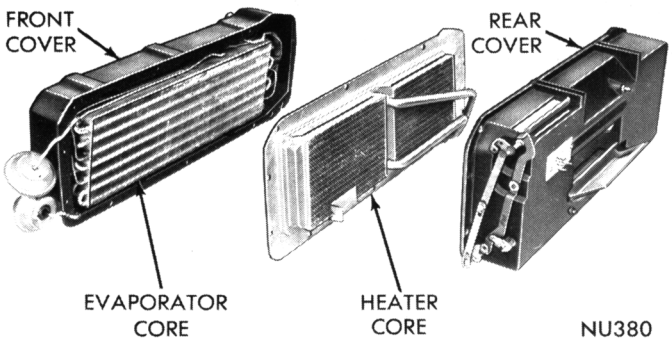

Fig. 66—Heater and Evaporator Core—Passenger Side

(9) Remove nut from housing end of support bracket and swing bracket up out of the way, carefully roll front cover and heater core out from under instrument panel.

Installation

(1) Place heater core in front cover and position core and cover on evaporator housing. Hold front cover in place and swing support bracket down over existing stud on face of front cover. Install retaining nut.

(2) From glove box opening, install two top housing retaining screws and three screws at right side of front cover.

(3) From under instrument panel, install five remaining screws surrounding housing.

(4) Install heat distribution duct to bottom of housing.

(5) Connect actuator rods.

(6) Connect all vacuum hoses to actuators and electrical connectors to resistor block.

(7) Install air distribution housing, center spot cooler duct and right spot cooler duct through glove box opening.

(8) Install steering column cover and left spot cooler duct. Install glove box assembly.

(9) Connect heater hoses and fill cooling system. For summer operation as well as winter operation, be sure the system is protected with the proper type and amount of anti-freeze.

(10) Install air cleaner and connect battery ground cable.

(11) Start engine, operate until normal engine operating temperature is obtained and test operation of heater.

BLOWER MOTOR

The blower motor is mounted to the engine side housing under the right front fender between the inner fender shield and the fender. The inner fender shield must be removed to service the blower motor, recirculating housing (Fig. 67), or engine side housing. See Group 23 "Body and Frame" of this manual for detailed illustrations.

EVAPORATOR

(Fury and VIP)
Removal

The refrigerant system must be completely discharged before opening any of the refrigerant lines.

To remove the evaporator, the entire unit housing must be removed from under the instrument panel.

(1) Disconnect negative battery cable, drain cooling system, remove air cleaner and disconnect heater hoses. Plug both core tubes to prevent spilling coolant when unit is removed (Fig. 68).

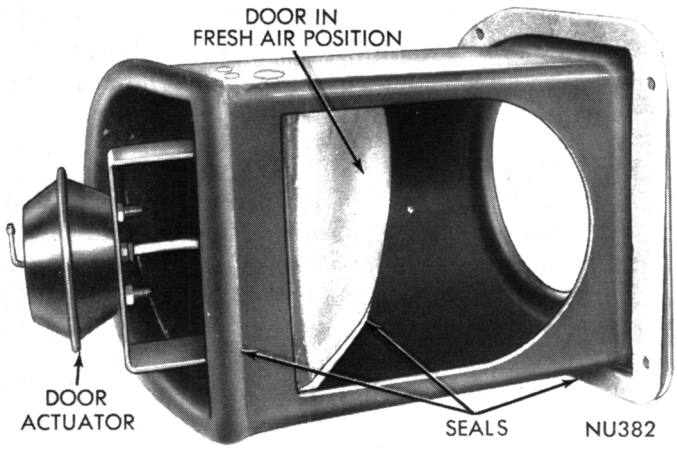

Fig. 67—Fresh Air Recirculating Door Housing

(2) Disconnect suction line and expansion valve from evaporator tubes. Use two wrenches to loosen each of these connections. **Cap all refrigerant openings to prevent the entrance of dirt or moisture.**

(3) Remove steering column cover and remove left spot cooler duct.

(4) Remove glove box and remove center spot cooler, air distribution housing and right spot cooler duct.

(5) From glove box opening, disconnect wires at resistor block and vacuum hoses from recirculating housing actuator.

(6) Unplug antenna wire from radio and place wire out of the way.

(7) From engine compartment remove seven retaining nuts surrounding engine side housing.

(8) Through glove box opening remove retaining nut from housing end of support bracket and swing bracket up out of the way.

(9) Carefully roll housing out from under instrument panel.

(10) Place unit on bench, disconnect actuator rods, remove heat distribution duct, and seperate front cover from evaporator housing by removing eleven screws surrounding the housings.

(11) From the tube side of the evaporator housing, remove six screws and carefully lift out the evaporator (Figs. 69 and 70).

Installation

(1) Position evaporator core in housing, align holes and install six mounting screws.

(2) Place heater core and front cover on evaporator core and secure the two covers with eleven screws.

(3) Install heat distribution duct to bottom of housings.

(4) Connect actuator rods and adjust linkage if necessary.

(5) Position unit under instrument panel and place

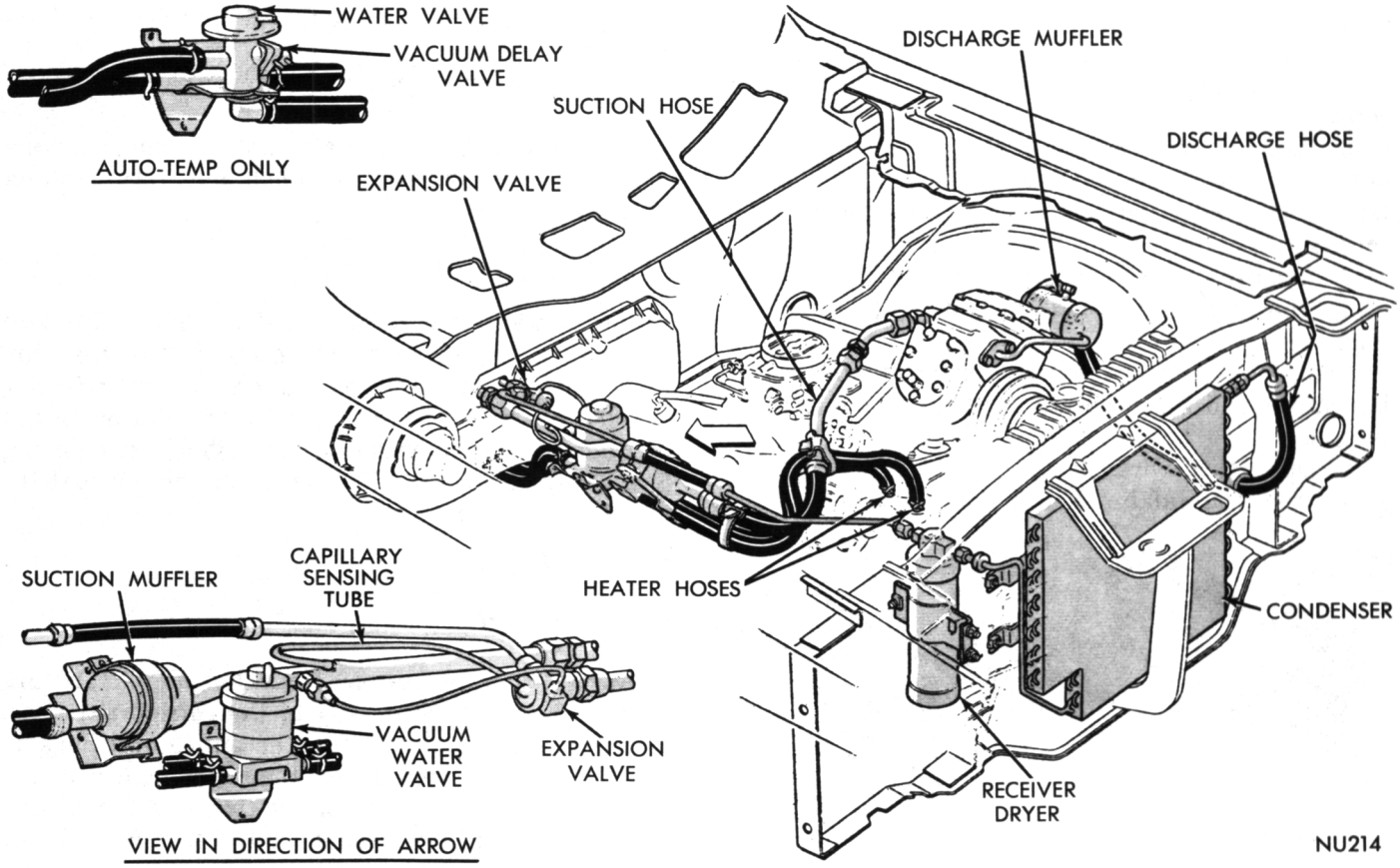

Fig. 68—Air Conditioning and Heater Plumbing (383 and 440 Cu. In. Engines) Fury and VIP

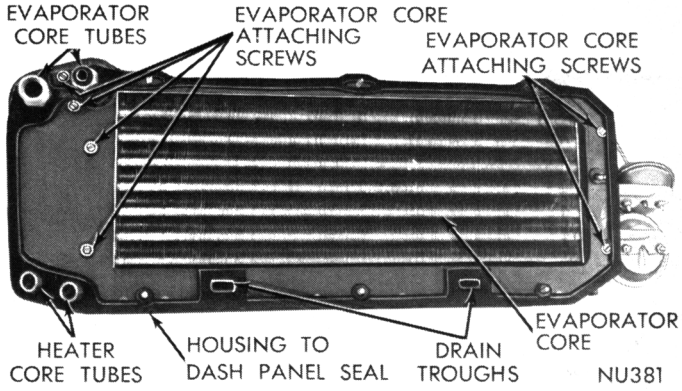

Fig. 69—Evaporator—Back Side of Front Cover

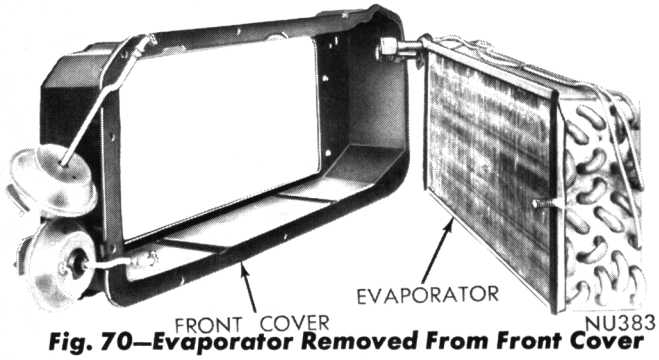

Fig. 70—Evaporator Removed From Front Cover

support bracket over existing stud on face of housing. Install retaining nut.

(6) From engine compartment, install seven retaining nuts to studs surrounding engine side housing.

(7) From glove box opening, connect wire to resistor block and vacuum hoses to recirculating housing actuator.

(8) Install center air distribution housing, center spot cooler and right spot cooler duct. Plug antenna wire into radio and replace glove box.

(10) Connect vacuum hoses to actuator on left side of housing.

(11) Install steering column cover.

(12) Install left spot cooler duct.

(13) Connect suction line and expansion valve. Use two wrenches to tighten fittings (Figs. 71 and 72).

(14) Connect heater hoses, fill cooling system and inspect for leaks.

(15) Install air cleaner and connect battery cable.

After the evaporator and heater assembly is installed in the vehicle, it will be necessary to sweep the system, test for leaks and charge the system with the proper amount of refrigerant. It is recommended that the operation of all controls be tested and an overall performance test be made after the repair or replacement of the evaporator assembly.

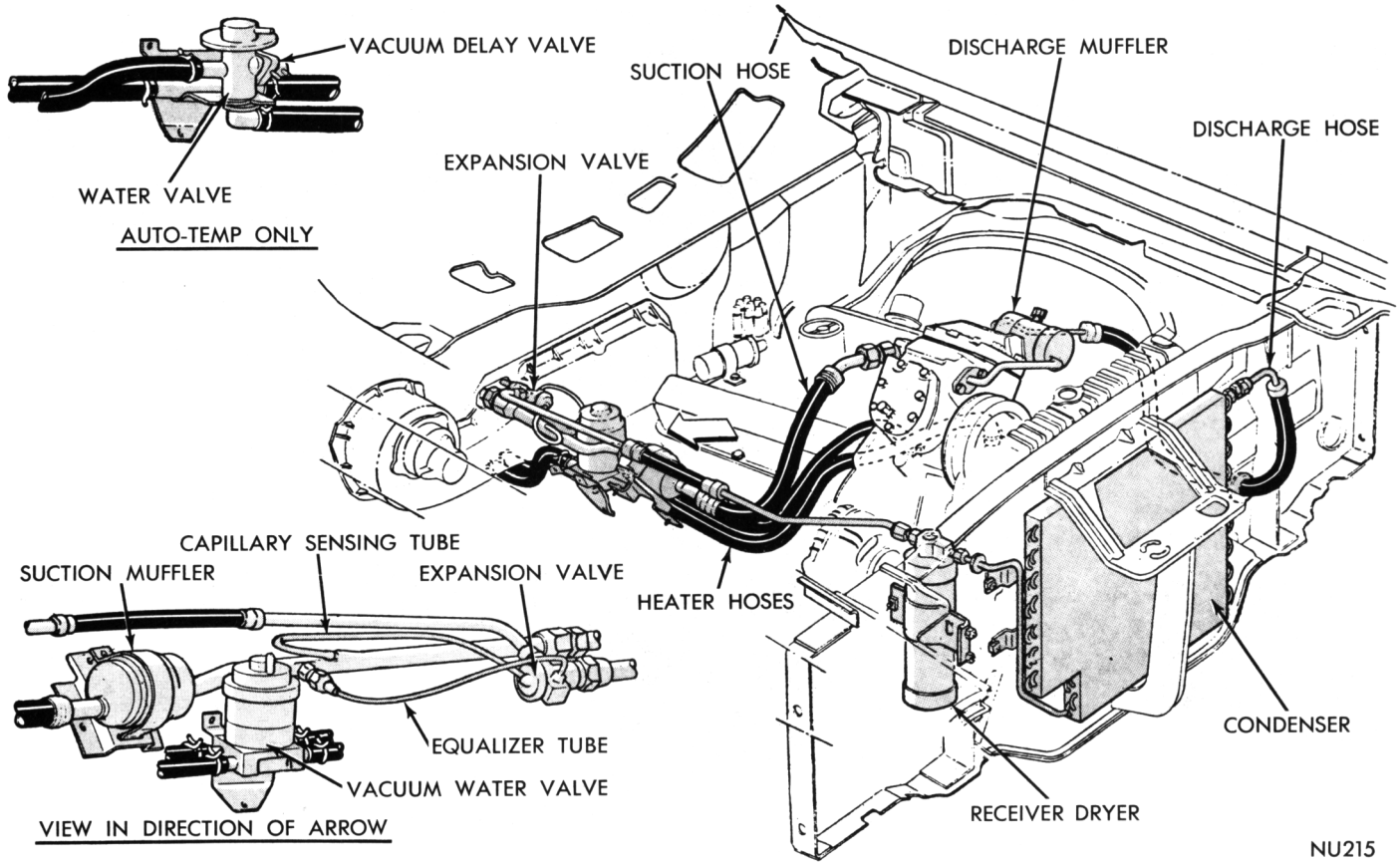

Fig. 71—Air Conditioning and Heater Plumbing (273, 318 Cu. In. Engine) Fury

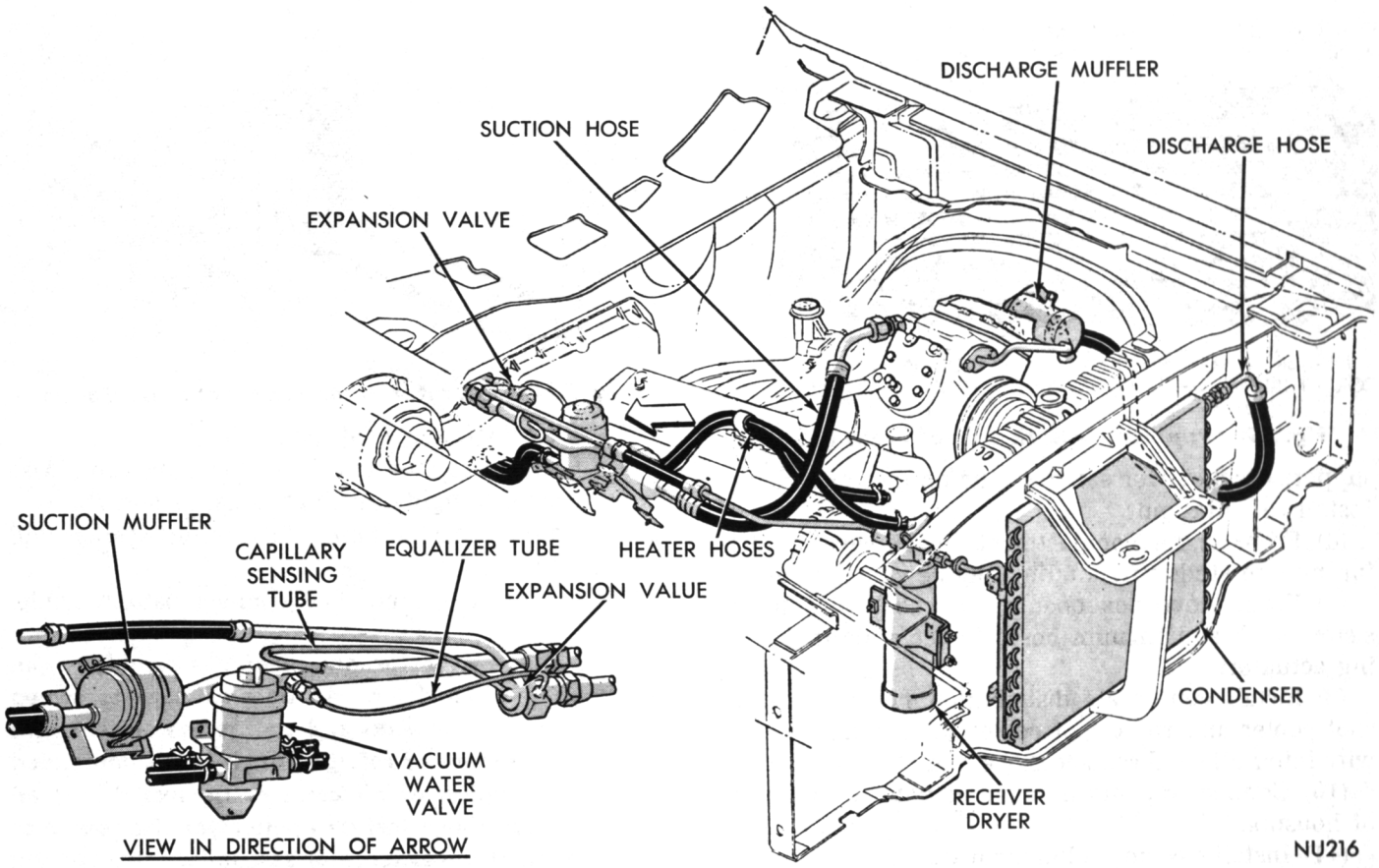

Fig. 72—Air Conditioning and Heater Plumbing (225 Cu. In. Engine) Fury

HEATER CORE

Removal (Satellite Models)

The heater core is located behind a separate cover attached to the evaporator case forward of the instrument panel (Figs. 73 and 74).

(1) Disconnect cable at battery, drain cooling system, remove air cleaner, and disconnect heater hoses.

(2) Remove distribution housing (Fig. 73) glove box and heater core inlet-outlet tube assembly (Fig. 75).

(3) Remove fresh air-recirculating air inlet hose.

(4) Disconnect floor air actuator rod from linkage.

(5) Disconnect actuator vacuum hoses and remove fresh air-recirculating door housing assembly (Fig. 76).

(6) Remove defroster hoses, disconnect electrical connections from resistor block.

(7) Remove the two screws attaching the water bypass valve to heater cover and remove the operating link attaching screw (Fig. 77).

(8) Disconnect air conditioning door actuator from mounting bracket and remove the two support braces.

(9) Remove five retainer spring clips and ten screws attaching cover to the case.

(10) To remove the cover and heater core it will be necessary to pull lower edge rearward, then lift assembly 3/8 inch to unhook the cover lip from the case.

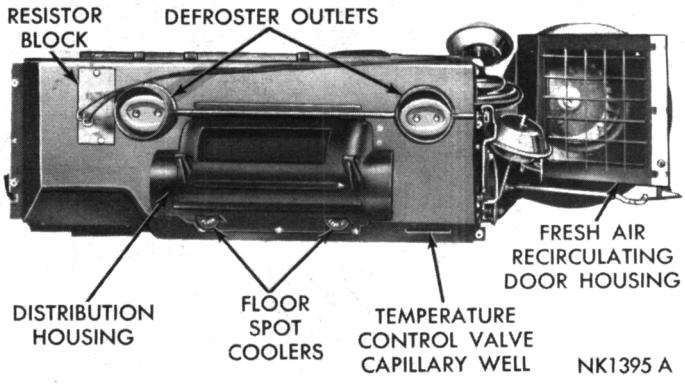

Fig. 73—Heater and Evaporator—Passenger Side

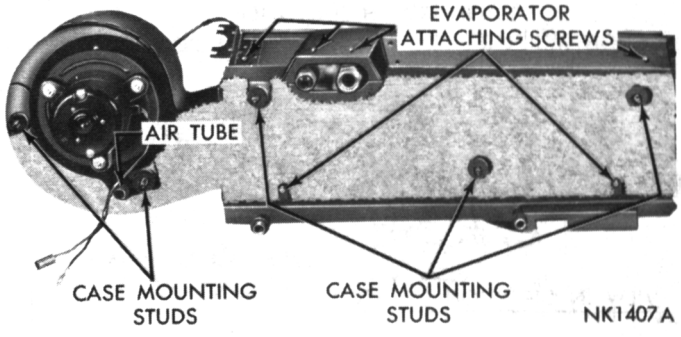

Fig. 74—Heater and Evaporator—Engine Side

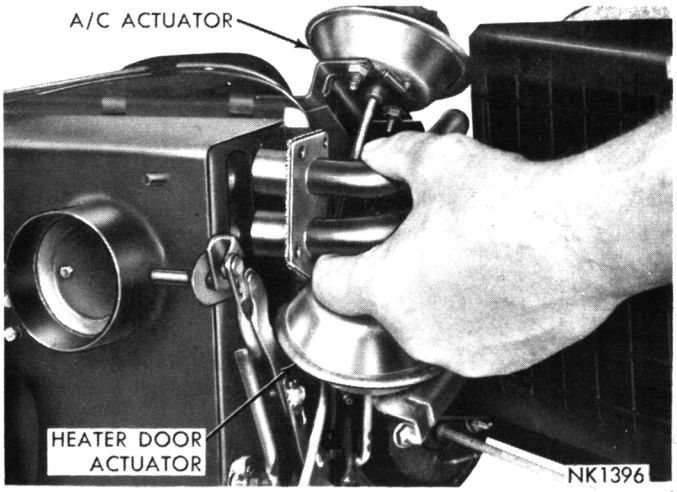

Fig. 75—Heater Core Water Tube Assembly—Removal and Installation

Carefully lower the assembly out to the right side.

Installation

Install the water by-pass valve with linkage to the heater core (if removed). Use new "O" rings on the inlet and outlet tubes (Fig. 78).

(1) Position heater core on evaporator case.

(2) To install the cover it is necessary to hook the cover lip on the evaporator case and roll it down into position. Secure the cover with five retainer spring clips on top and ten screws on the two sides and bottom.

(3) Attach water by-pass valve to heater cover and the operating link to air conditioning door.

(4) Install air conditioning door actuator with the vacuum hoses (hose with red stripe to the rod side), and the two support braces.

(5) Install electrical connections to resistor block.

(6) Install the vacuum hoses to floor air actuator and the fresh air-recirculating actuator (hose with red stripe to the rod side) and install the fresh air-recirculating door housing. Connect floor air actuator rod to the linkage with the retainer clip.

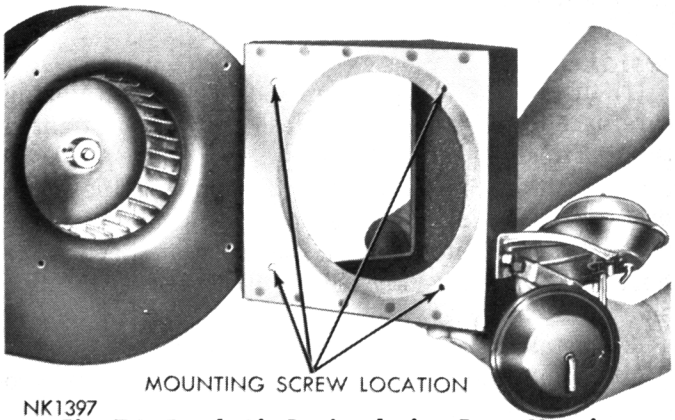

Fig. 76—Fresh Air-Recirculating Door Housing Removal and Installation

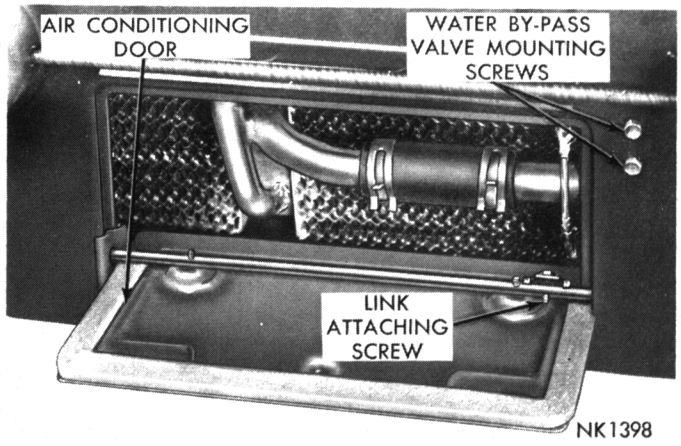

Fig. 77—Water By-Pass Valve Link Attaching Screw

(7) Install fresh air-recirculating air inlet hose.

(8) Install the heater core inlet-outlet tube assembly, a drop or two of clean water on the "O" rings will facilitate installation.

(9) Install temperature control valve capillary tube in heater core cover.

(10) With the air conditioning door open approximately one inch, install the distribution housing.

(11) Install the flexible hoses to the instrument panel outlets.

(12) Install glove box assembly.

(13) Connect the heater hoses (Figs. 79 thru 81) and fill cooling system. For summer operation as well as winter operation, be sure the system is protected with the proper type and amount of antifreeze.

(14) Install air cleaner and connect battery cable.

(15) Start engine, operate until normal engine operating temperature is obtained and test operation of the heater assembly.

EVAPORATOR (Figs. 82 and 83)

Satellite Models

Removal

The system must be completely discharged before opening any of the refrigerant lines.

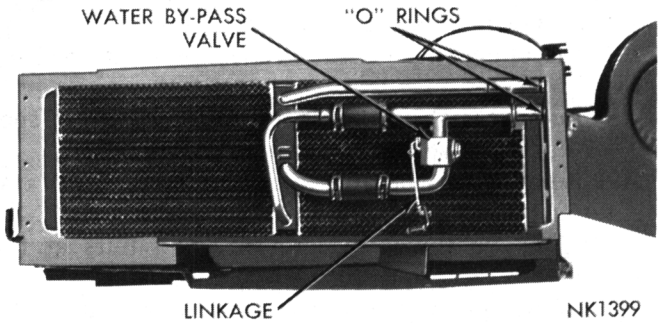

Fig. 78—Heater Core and By-Pass Valve Assembly

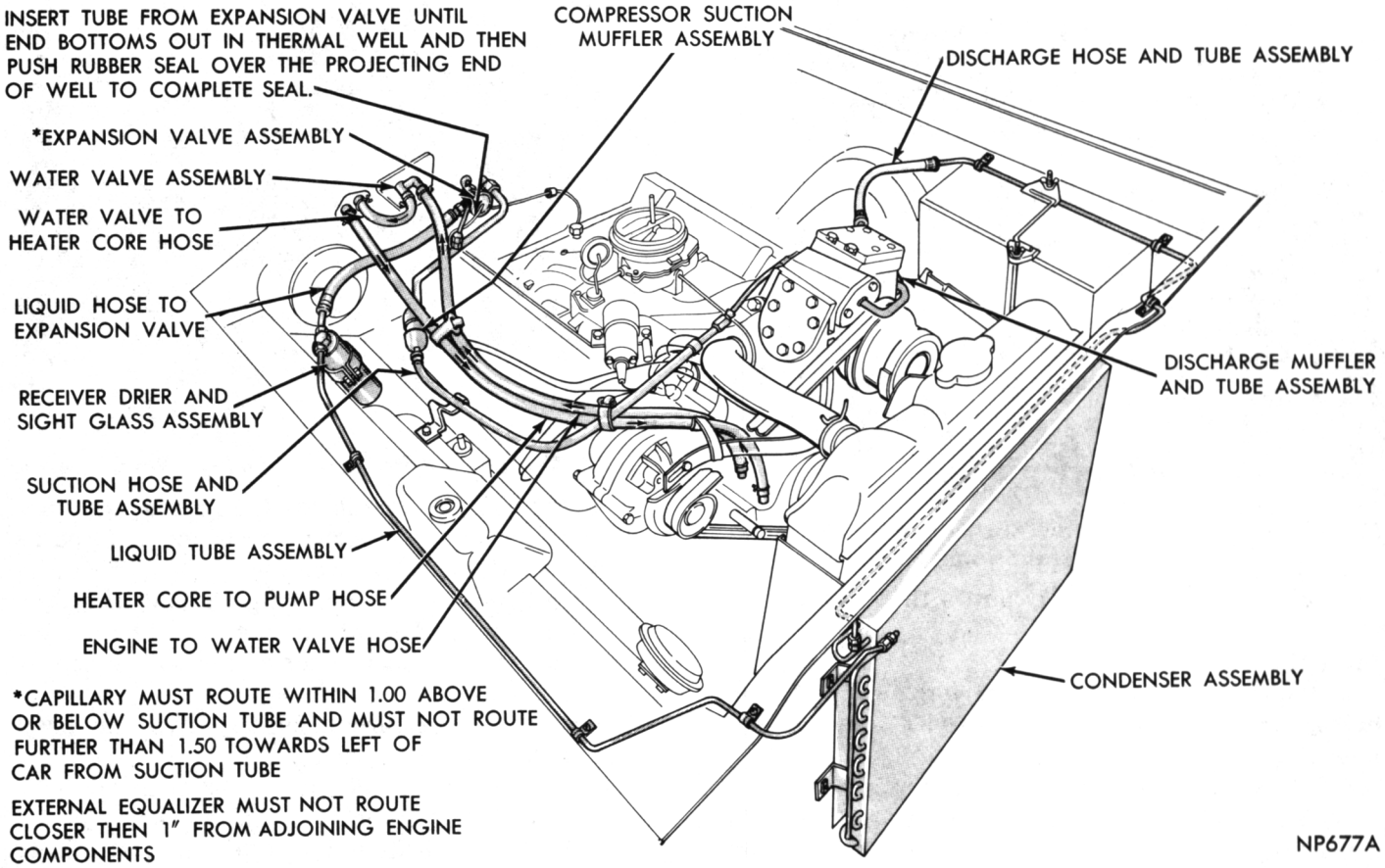

Fig. 79—Conditioning and Heater Plumbing (383, 440 and 426 Cu. In. Engine) Belvedere, Satellite

To remove the evaporator and case assembly, remove the heater and evaporator as an assembly as follows:

(1) Disconnect cable at battery negative post, drain cooling system, remove air cleaner, disconnect heater hoses (Figs. 79 thru 81) and remove blower motor air hose.

(2) Disconnect suction line and expansion valve from evaporator. Use two wrenches to loosen each of these connections. **Cap all refrigerant openings to prevent the entrance of dirt and moisture.**

(3) Remove cooler duct and hoses.

(4) Remove distribution housing, defroster hoses and fresh air hose.

(5) Remove glove box.

(6) Disconnect actuator vacuum hose cluster at control switch and at "Tee" source connector.

(7) Disconnect electrical connections at resistor block.

(8) Remove right hand spot cooler duct and spot cooler (held by two button head spring clips).

(9) Remove Ranco valve sensing tube and brace at center of housing.

(10) Remove the five mounting stud nuts at the firewall.

(11) Pull the unit towards rear of car until all studs are clear of firewall, then move the unit towards the right, tilting the unit down and remove from under the instrument panel and to the work bench for disassembly.

(12) Remove the floor air actuator bracket.

(13) Remove heater core housing seven attaching screws and the two screws attaching the actuator to the housing to facilitate removing the four stud nuts.

(14) Raise heater core housing slightly to release from lip of evaporator housing and separate the heater unit from the evaporator unit.

(15) Remove the six evaporator attaching screws and carefully remove the evaporator and drain pan from case (Fig. 82).

Installation

(1) Install the evaporator and drain pan, being careful not to damage the case insulation; tighten the six attaching screws.

(2) Position the heater core housing on the evaporator case by hooking the housing lip on the evaporator case and pull it down into position. Secure the housing with the spring clips and screws on the two sides and bottom.

(3) Install the floor actuator and bracket.

(4) Install the collars and insulators on the two drain tubes (Fig. 83).

(5) Enter the complete heater and evaporator under

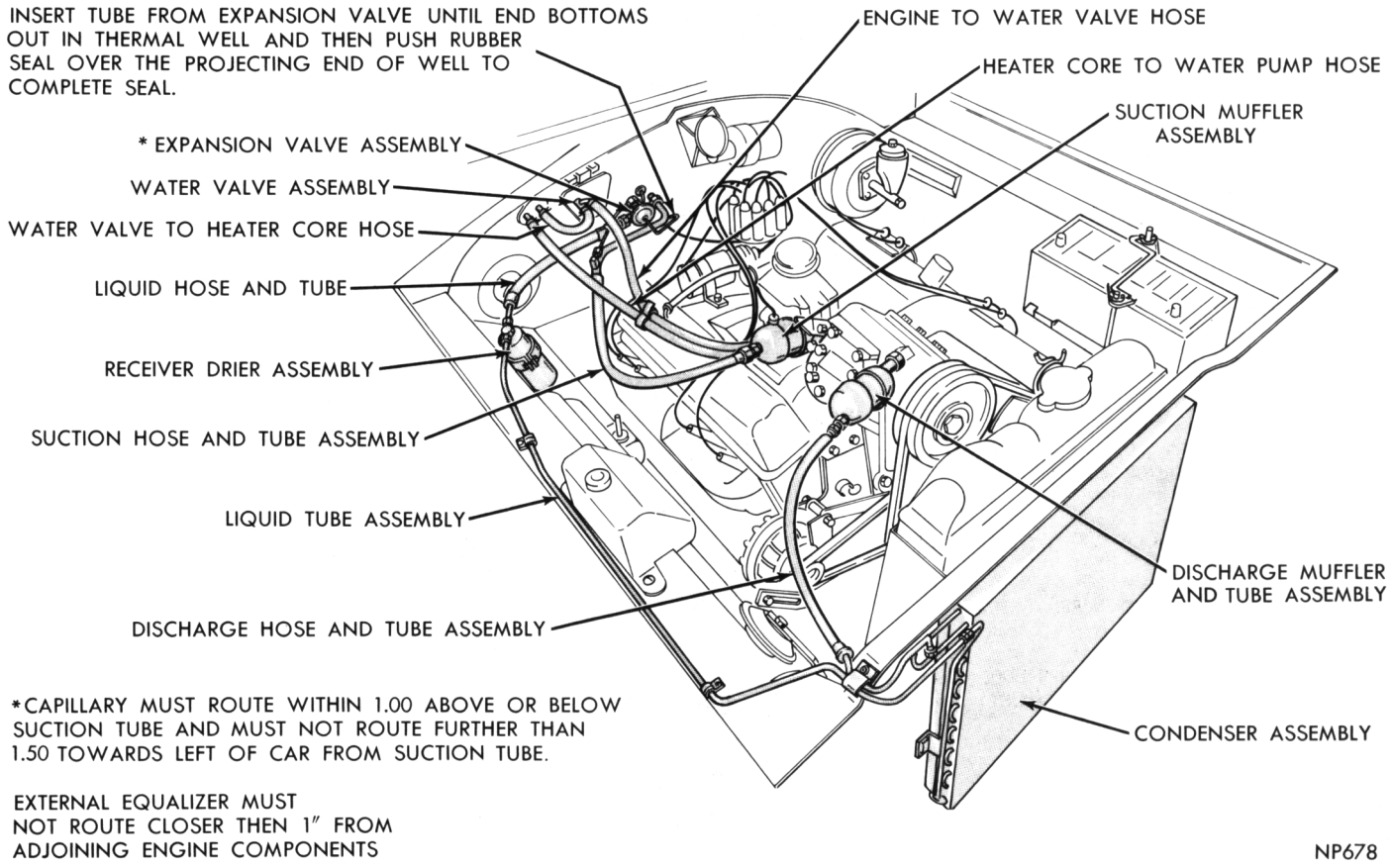

Fig. 80—Air Conditioning and Heater Plumbing (273 and 318 Cu. In. Engine) Belvedere, Satellite

the instrument panel and position the unit against the firewall, indexing the tubes and mounting studs with corresponding holes in the firewall, then carefully move unit forward until unit is positioned against the firewall. Install the stud nuts but do not tighten until all nuts have been installed and studs centered in their respective holes.

(6) Install blower motor wires and air tube.

(7) Use new "O" rings with clean refrigerant oil on all connections, then install the suction line and the expansion valve to the evaporator fittings. **Use two wrenches to prevent rotation and twisting of the lines.**

(8) Connect the heater hoses (Figs. 79 thru 81).

(9) Install the Ranco valve sensing tube.

(10) Install the right hand spot cooler and duct.

(11) Connect electrical connections at resistor block.

(12) Install the vacuum hoses to floor actuator and the fresh air-recirculating actuator (hose with red stripe to the rod side). Connect floor air actuator rod to the linkage with the retainer clip.

(13) Connect actuator vacuum hose cluster at control switch and vacuum source hose at "Tee" connection.

(14) Install cooler duct and distribution housing.

(15) Install all flexible hoses to instrument panel outlets.

(16) Install glove box assembly.

(17) Fill cooling system. For summer operation as well as winter operation, be sure the system is protected with the proper type and amount of anti-freeze.

(18) Install air cleaner and connect battery cable. **After the evaparotor and heater assembly is installed in the vehicle, it will be necessary to sweep the system, test for leaks and charge the system with the proper amount of refrigerant. It is recommended that the operation of all controls be tested and an overall performance test be made after the repair or replacement of the evaporator assembly.**

BLOWER MOTOR

(Satellite Models)

All service to the blower motor is made from the engine compartment side.

Removal

(1) Disconnect feed wire at the connector and the ground wire. Remove air tube.

(2) Remove the three sheet metal screws located on the outer surface of mounting plate (Fig. 84).

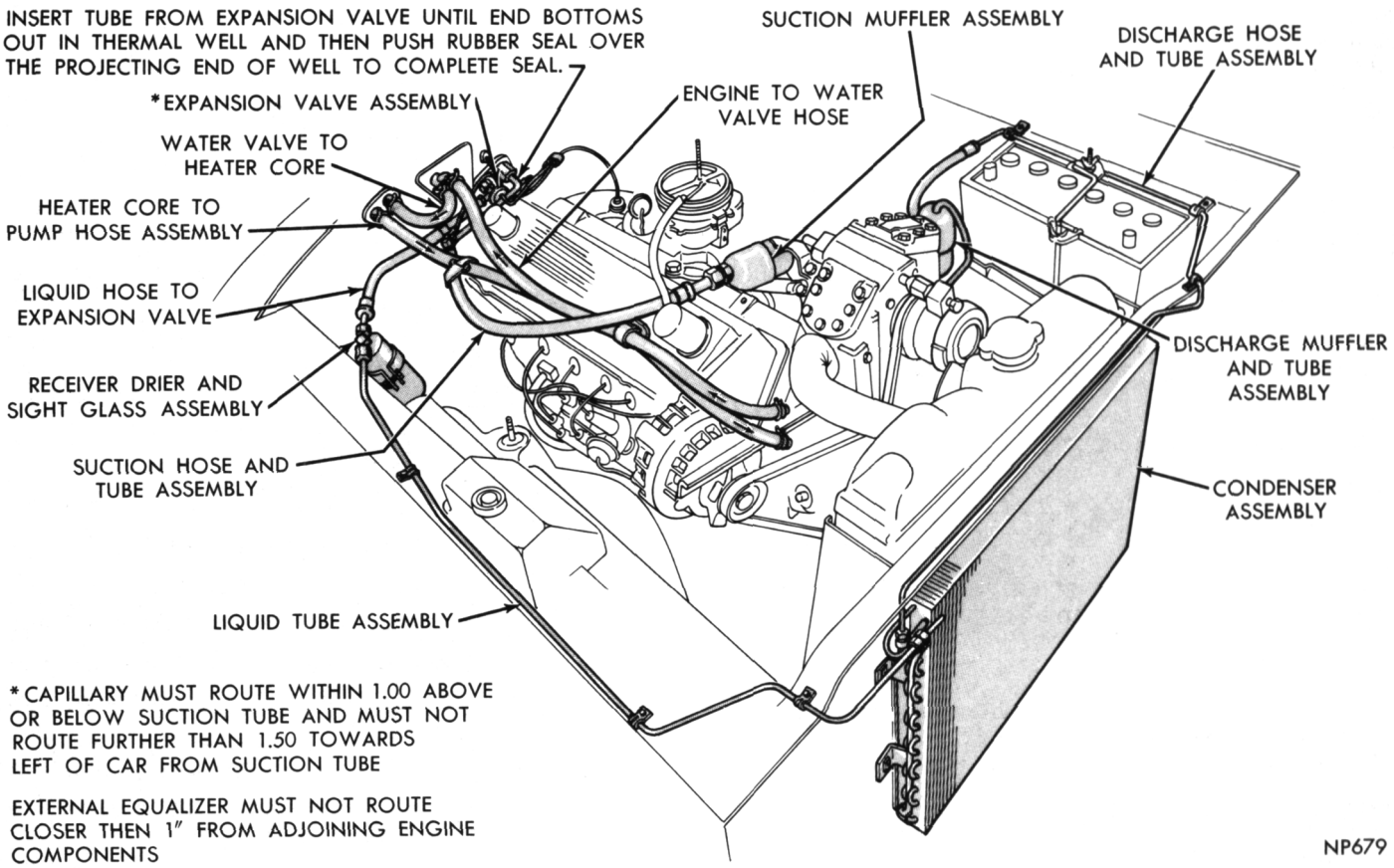

Fig. 81—Air Conditioning and Heater Plumbing (225 Cu. In. Engine) Satellite

(3) Remove mounting plate, blower motor and fan as an assembly.

Installation

If the blower was removed from the mounting plate, be sure the mounting grommets are installed at the attaching bolts. Be sure the blower wheel is free and does not rub.

(1) Install blower motor assembly to the evaporator case with the air tube opening to the bottom. Secure with the three sheet metal screws.

(2) Install air tube, motor ground wire and connect the feed wire.

(3) Test operation of blower.

EXPANSION VALVE "Valiant"

Removal

The system must be completely discharged before opening any of the refrigerant lines.

(1) Remove equalizer tube from evaporator suction line fitting (Fig. 85).

(2) Disconnect expansion valve from elbow assembly and liquid line. Use two wrenches to loosen each of these connections.

(3) Carefully pull out capillary sensing tube from

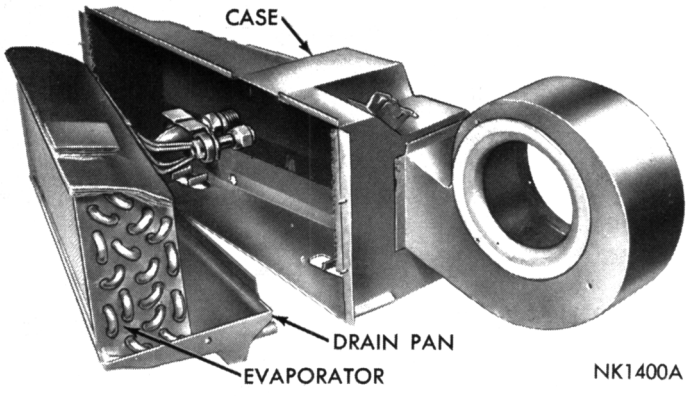

Fig. 82—Evaporator Removed from Case

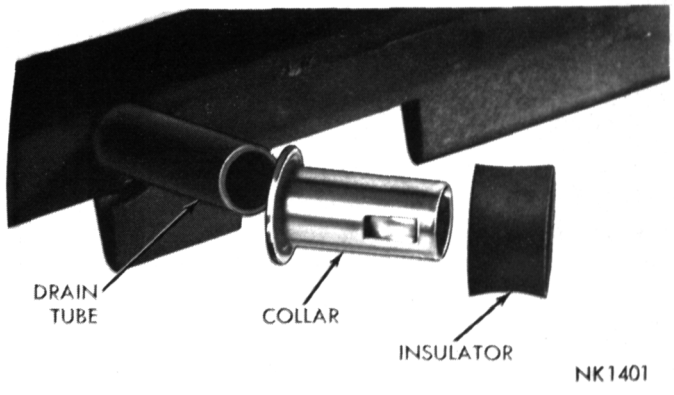

Fig. 83—Evaporator Drain Tube Collar and Insulator

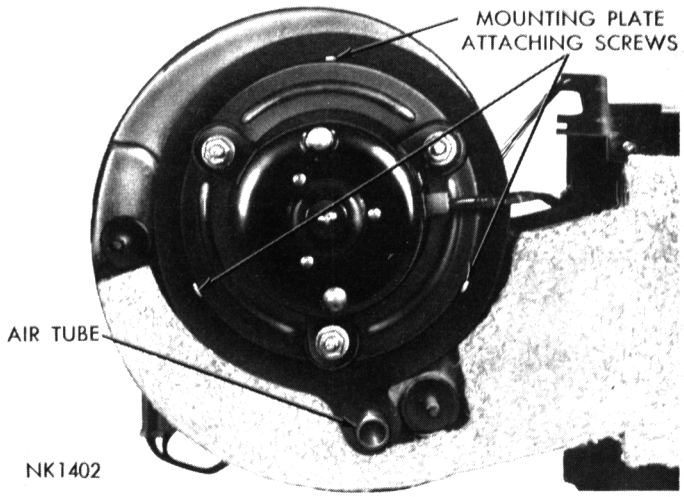

Fig. 84—Blower Motor Installed

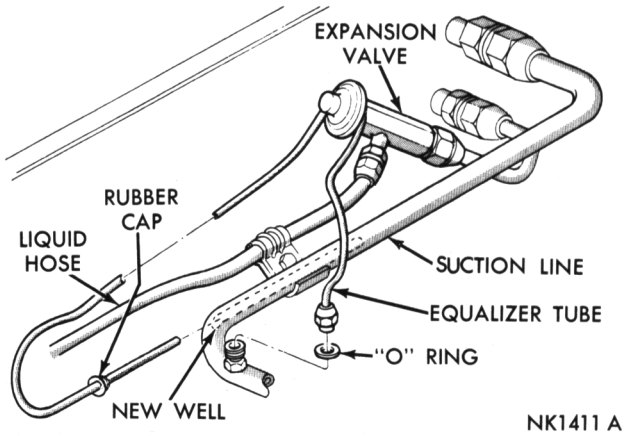

Fig. 85—Expansion Valve Details

well located in suction line. Remove rubber seal from capillary sensing tube. Inspect inlet screen.

Installation

(1) With new "O" rings and clean refrigerant oil on all fittings, install the expansion valve to the liquid line and elbow assembly using two wrenches to prevent rotation and twisting of the lines.

(2) Connect equalizer tube to the fitting on the evaporator suction line.

(3) With a rubber seal on the capillary sensing tube, carefully install the tube in the well located in the suction line as far as it will go (approximately five inch depth).

(4) After expansion valve is installed, it must be completely tested. Then the system must be tested for leaks and recharged.

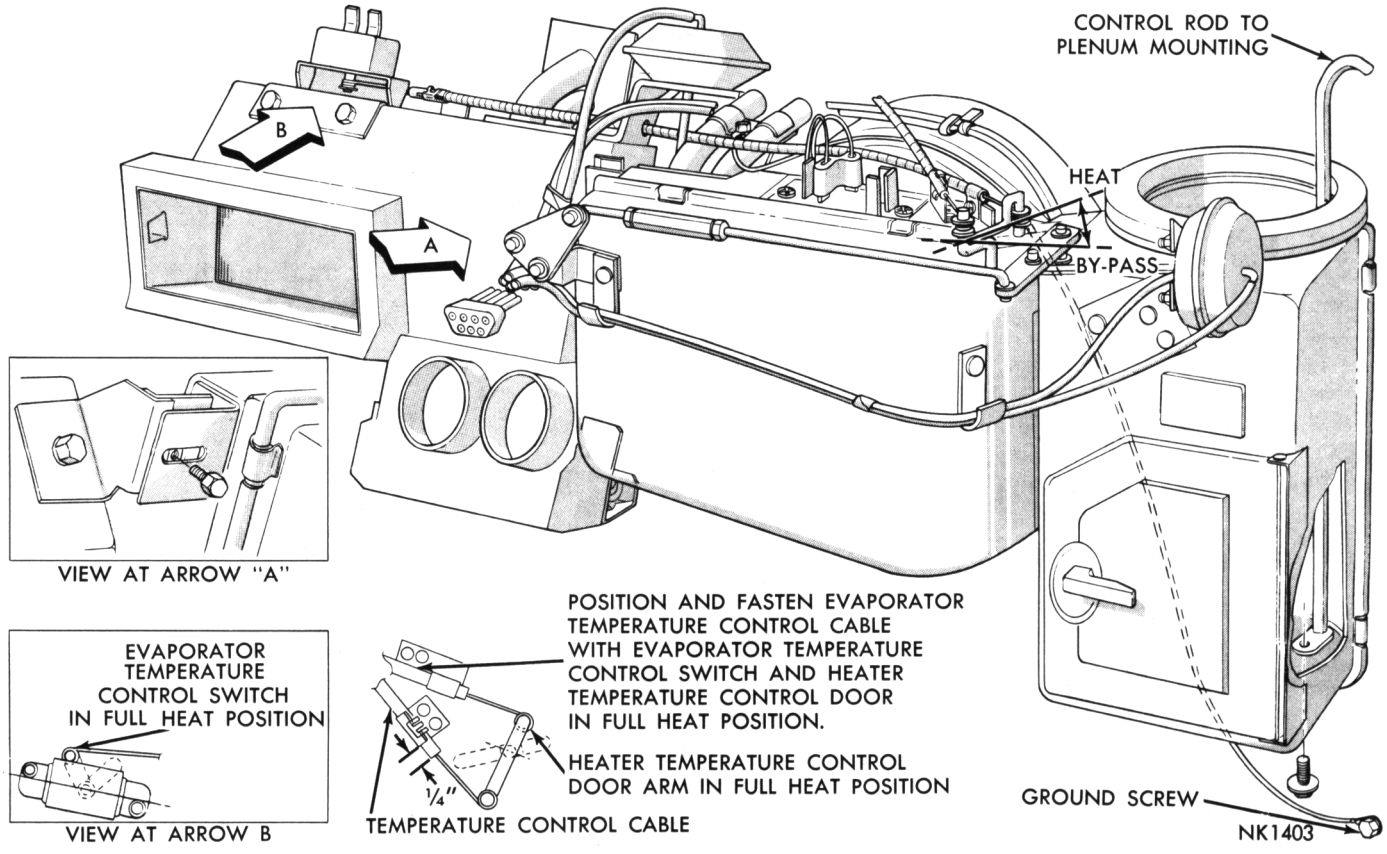

Fig. 86—Heater and Evaporator Assembly—Passenger Side—Typical

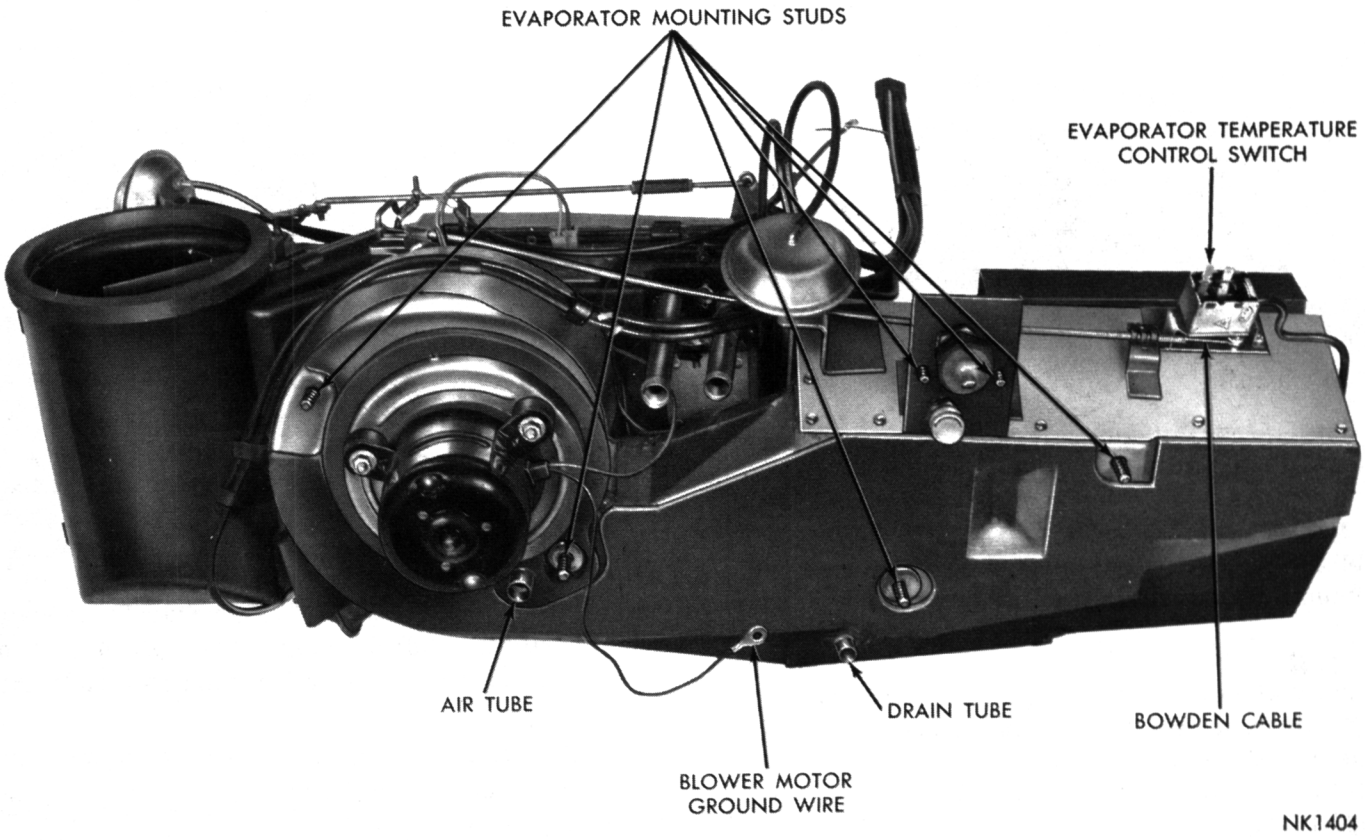

Fig. 87—Heater and Evaporator Assembly—Engine Side—Typical

HEATER CORE

"Valiant"

The heater core is located behind a separate cover forward of the instrument panel. The core is held in position in its cover by four sheet metal attaching screws. The core and cover are removed and installed as an assembly.

Removal (Figs. 86 and 87)

(1) Disconnect battery and remove air cleaner.

(2) Drain cooling system and remove heater hoses from the core.

(3) Remove air outlet assembly, glove box assembly and right defroster tubing.

(4) Disconnect electrical wires from resistor block, vacuum hoses from the fresh air-recirculating actuator, the temperature control cable, evaporator temperature control switch control cable and heater core ground wire.

(5) Remove the screw securing the heater assembly to the evaporator assembly (View A, Fig. 86).

(6) Disconnect heater housing support rod from the fresh air duct (Fig. 87).

(7) Remove heater assembly.

(8) Remove fresh air-recirculating door actuator.

(9) Remove operating link between bellcrank and recirculating door.

(10) Remove the fresh air inlet seal from either front or rear heater housing half only.

(11) Remove the retainer clips attaching the heater housing halves together and separate the heater housing halves.

(12) Remove the screws attaching the heater core to heater housing and remove the core.

Installation

(1) Place a small bead of sealer in heater housing flange.

(2) Install heater core in the heater housing and secure the four attaching screws.

(3) Cement the weatherseal on the inner lip of heater core flange (Fig. 88).

(4) Place a small bead of sealer on heater housing cover.

(5) Position both housing halves together and install the eleven retainer spring clips. Remove any excess sealer.

(6) Cement fresh air inlet seal into position.

(7) Install operating link between bellcrank and recirculating door. Adjust if necessary. With recirculating door closed, fresh air door should be fully open.

(8) Install fresh air recirculating actuator.

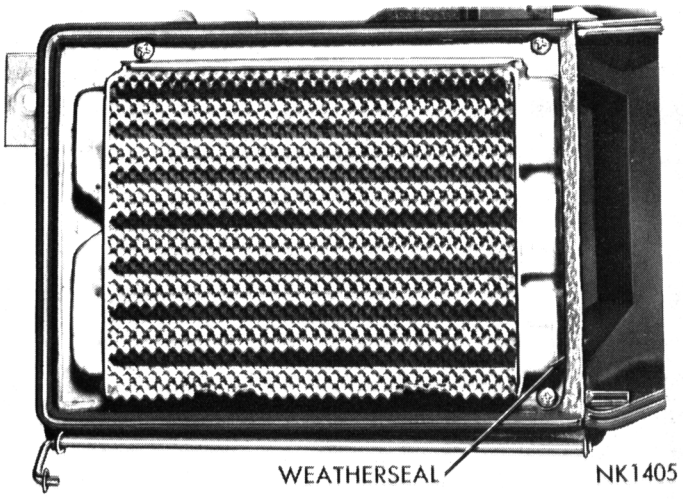

Fig. 88—Weatherseal Positioned

(9) Position heater assembly in the vehicle and proceed as follows:

(a) Install temperature control cable on outer operating arm in full heat position with end of cable housing 1/4 inch beyond edge of retainer clip (Fig. 86).

(b) Install the evaporator temperature control switch cable on the inner operating arm in full heat position with the end of the cable housing 1/4 inch beyond the edge of the cable clip.

(10) Position heater assembly on dash panel and secure heater support rod to the fresh air duct and the screw to the evaporator assembly.

(11) Install electrical wires to resistor block, vacuum hoses to fresh air-recirculating actuator (red stripe to rod side) and heater core ground wire.

(12) Install right defroster tubing, glove box assembly and air outlet assembly.

(13) Install heater hoses, (Figs. 89 and 90), fill cooling system, connect battery terminal and install air cleaner.

(14) Start engine, operate until normal engine operating temperature is obtained and test operation of heater assembly.

EVAPORATOR "Valiant"

The evaporator assembly includes the evaporator core, the evaporator housing with the evaporator inlet and defroster doors. To remove the evaporator assembly, it is necessary to remove the heater assembly, See "Heater Removal." The system must be completely discharged before opening any of the refrigerant lines.

Removal

(1) Disconnect elbow assembly and suction lines from evaporator. Use two wrenches to loosen each of

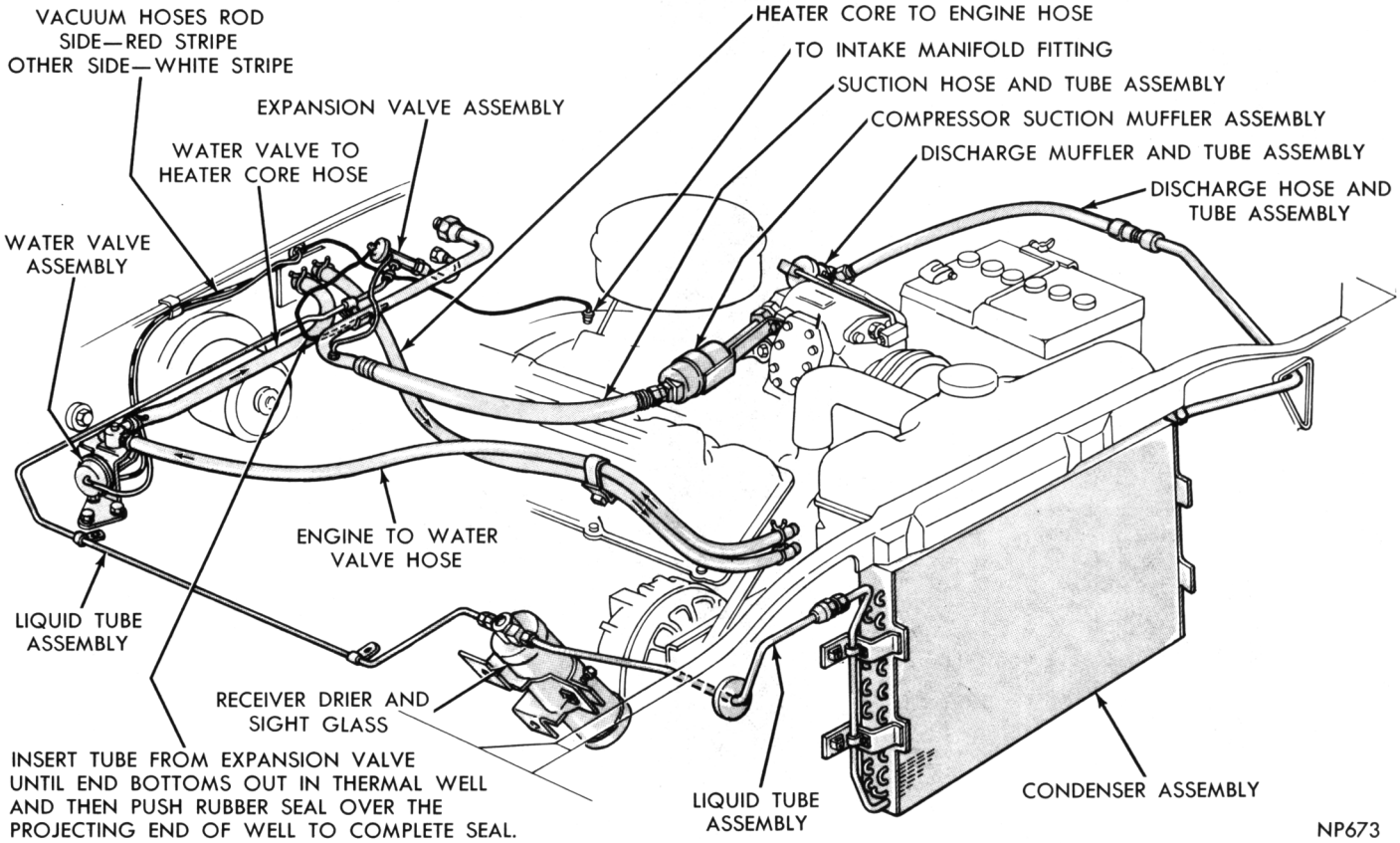

Fig. 89—Air Conditioning and Heater Plumbing (Valiant) 225 Cu. In. Engine

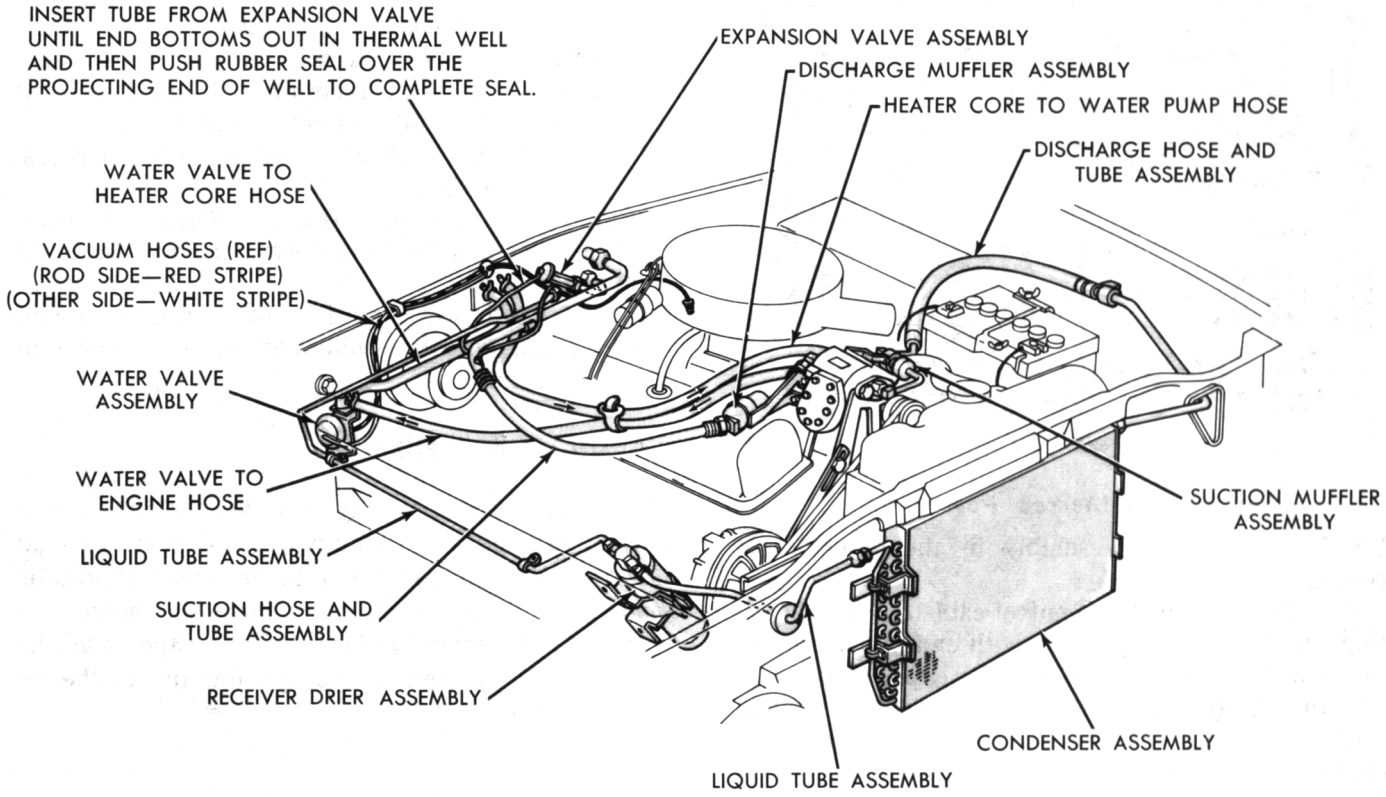

Fig. 90—Air Conditioning and Heater Plumbing (Valiant) 273 Cu. In. Engine

these connections. Cap all the refrigerant openings to prevent entrance of dirt and moisture.

(2) Disconnect blower motor wires and air tube.

(3) Disconnect actuator hoses.

(4) Remove mounting stud nuts and remove evaporator assembly with blower motor as a single unit (Fig. 91).

(5) Remove defroster actuator, evaporator tempera-

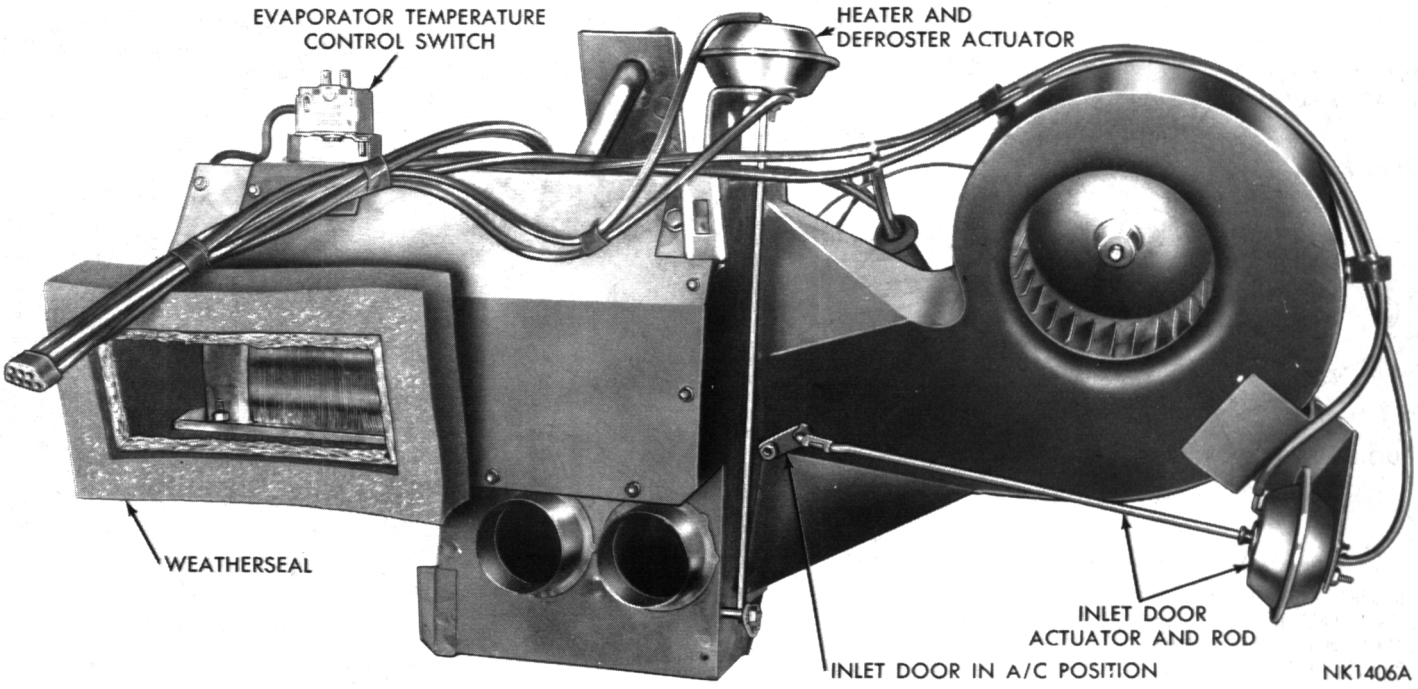

Fig. 91—Evaporator Assembly Removed—Typical

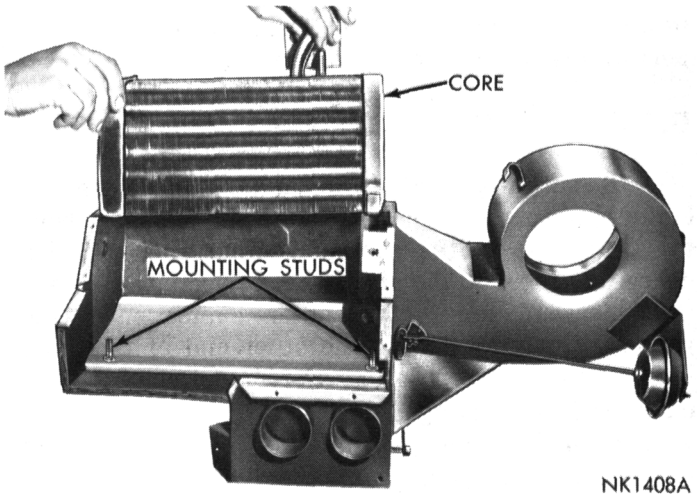

Fig. 92—Removing Evaporator Core—Typical

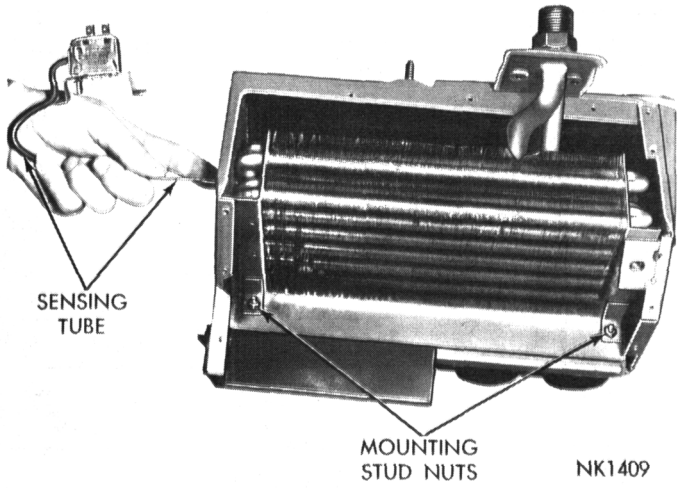

Fig. 93—Installing Capillary Sensing Tube

ture control switch, and carefully withdraw the capillary sensing tube.

(6) Remove the weatherseal around the air outlet opening, and remove cover screws and cover.

(7) Remove the attaching stud nuts and remove evaporator from case (Fig. 92).

Installation

(1) Position evaporator in the case and secure with attaching stud nuts.

(2) Place a small bead of sealer on case flange, install case cover and secure the attaching screws. Remove any excess sealer.

(3) Carefully install capillary sensing tube through the case into the evaporator **to the full depth** (Fig. 93). Position evaporator temperature control switch and secure with attaching screws (Fig. 93).

(4) Install defroster actuator and cement the weatherseal around air outlet opening.

(5) Position evaporator assembly on the dash panel and install the stud nuts that attach the assembly to dash panel.

(6) Install blower motor wires and air tube.

suction line. Use two wrenches to prevent rotation

(7) Use new "O" rings with clean refrigerant oil on all connections, install the inlet elbow assembly and and twisting of the lines.

(8) Install actuator hoses (hose with red stripe to rod side).

(9) Install heater as described in "Heater Installation."

(10) After the evaporator and heater assemblies are installed in the vehicle, it will be necessary to sweep the system, test for leaks and charge the system with the proper amount of refrigerant. It is recommended that the operation of all controls be tested and an overall performance test be made after the repair or replacement of the evaporator assembly.

BLOWER MOTOR

"Valiant"

All service to the blower motor is made from the engine compartment side.

Removal

(1) Disconnect feed wire at connector and ground wire. Remove air tube.

(2) Remove the three sheet metal screws located on the outer surface of mounting plate.

(3) Remove mounting plate, blower motor and fan as an assembly.

Installation

If the blower was removed from the mounting plate, be sure the mounting grommets are installed at the attaching bolts. Be sure the blower wheel is free and does not rub.

(1) Install blower motor assembly to the evaporator case with air tube opening to the bottom. Secure with the three sheet metal screws.

(2) Install air tube, motor ground wire and connect the feed wire.

(3) Test operation of blower motor.

COMPLETE SYSTEM DISCHARGE AND RECHARGE

REFRIGERANT SERVICE

Use only Refrigerant 12 in the air-conditioning system. Refrigerant 12 is available in bulk tanks or in sealed 15 ounce cans. The use of canned refrigerant is preferred by most technicians because it pro-

vides a very quick and simple means of adding refrigerant or charging the system completely. Refer to the Refrigerant Charge Chart.

An accurate scale must be used to insure charging with the proper amount of refrigerant.

Since the use of canned refrigerant is preferred universally, only that method is described.

REFRIGERANT CHARGE

	Single	Dual*
Fury, VIP Satellite	3 lbs. 2 oz. to 3 lbs. 6 oz.	4 lbs. 2 oz. to 4 lbs. 6 oz.
Valiant	2 lbs. 10 oz. to 2 lbs. 14 oz.	

* Not used on Satellite Models

Before the system can be opened for replacement of lines or components, the system must be completely discharged. Whenever the system has been opened, it must be swept with a partial charge, and the entire system tested for leaks. Compressor oil level should be checked and adjusted, if necessary. See "Oil Level". The drier should be replaced and the system evacuated using a vacuum pump to remove all air and moisture. The system should be charged with the proper amount of refrigerant. Detailed instruction for performing these operations follow.

DISCHARGE THE SYSTEM

(1) Be sure the valves of the gauge manifold set are closed before attaching the gauge set manifold (suction test hose to the suction service port and discharge test hose to the discharge service port). Attach the long test hose to the center connection of the gauge set manifold. Lead the other end of this hose into an exhaust ventilation system outlet or to the outside of the building.

(2) Open the gauge set manifold needle valve and close both of the gauge set manifold gauge valves.

(3) With the vehicle windows open and hood up, operate the engine as shown in the following chart:

(4) Push in "A/C" button, fan switch on high. On

	Engine	Engine R.P.M.
Fury, VIP and Satellite	6 Cyl. 8 Cyl.	1600 1300
Valiant	6 Cyl. 8 Cyl.	1250 1000

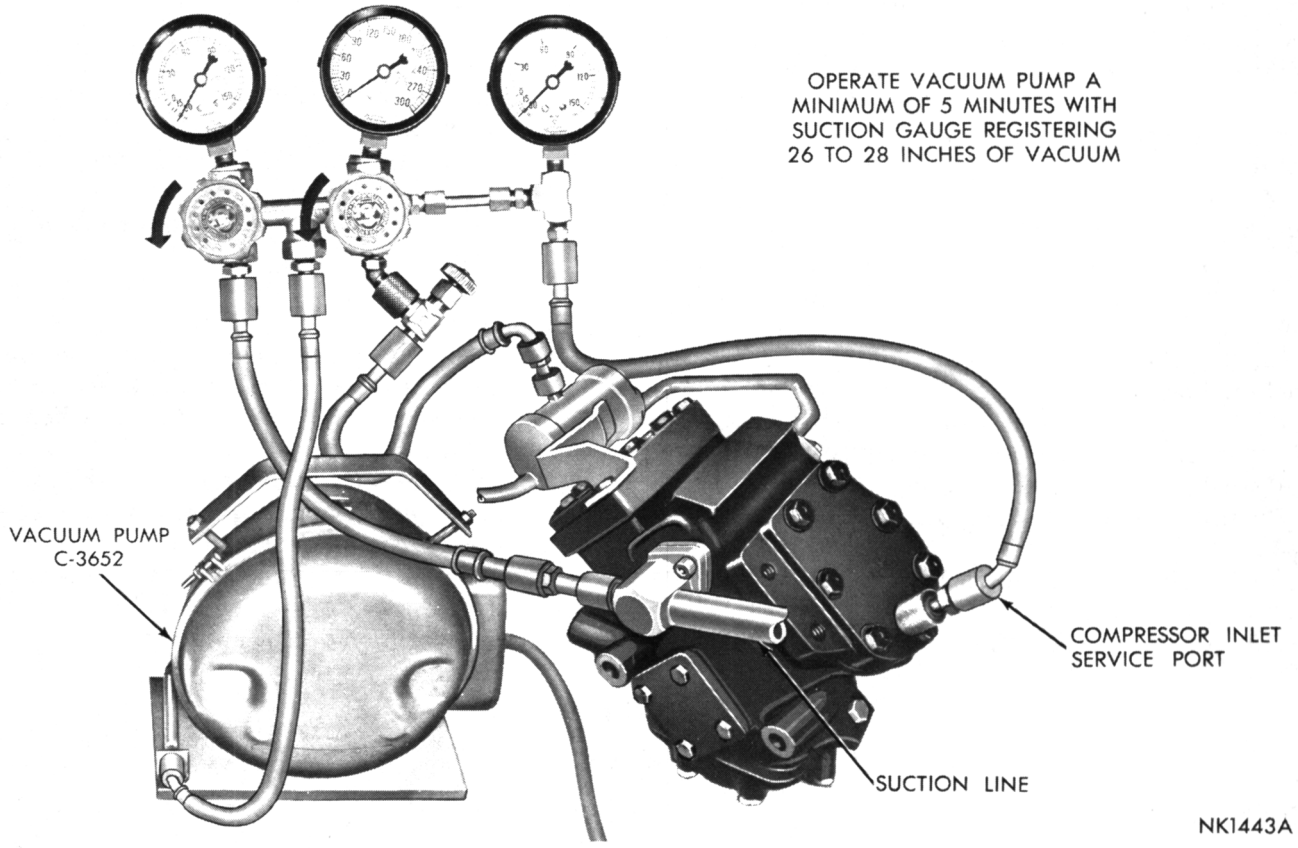

Fig. 94—Evacuating the System—Fury, VIP, and Satellite

dual installation both blowers must be on high speed during the charging operation.

"Valiant installation—push in the "A/C" button and fan switch on high.

(5) Allow the system to operate at full capacity for at least 15 minutes at the rpm shown in the chart. This will cause most of the compressor oil in the system to return to the compressor crankcase.

(6) Open the discharge right-hand gauge valve a small amount. This will allow the refrigerant vapor to discharge **slowly.**

CAUTION: Do not allow the system to discharge rapidly since this would sweep some of the refrigerant oil out of the compressor.

(7) Allow the system to discharge until the discharge pressure gauge registers zero. Open the left-hand valve to release any vapor trapped at the suction side of the system.

SWEEP-TEST CHARGE

The purpose of the sweep-test charge is to pressurize the system so that a leak test can be made. The sweep-test charge also serves the purpose of drying the system or sweeping out trapped moisture. Repairs and component replacement must be completed before charging with the sweep-test charge.

(1) Close both gauge set manifold valves and open the gauge set manifold needle valve.

(2) Attach the free end of the long hose used for discharging to the refrigerant dispensing manifold.

(3) Attach a single can of Refrigerant 12 to the dispensing manifold. Place the refrigerant in 125 degree water. For detailed instructions on attaching refrigerant can for charging, see "Charging the System" in this section.

(4) With vehicle windows open and hood up, proceed with test as follows:

(5) Start engine and adjust R.P.M. as indicated in chart under "Discharge The System".

(6) Push in "A/C" button, fan switch on high. On dual installation both blowers must be on high speed during the charging operation.

"Valiant installation—push in the "A/C" button and fan switch on high.

(7) Slowly open the left-hand gauge set manifold valve to meter the refrigerant into the system. When the full can of refrigerant has been metered into the system, close the gauge set manifold valves and the refrigerant manifold valve.

If the system has been opened for repair or replacement, a complete leak test must be made to make sure the system is sealed. Also, if the system has accidentally lost its charge it will be necessary to

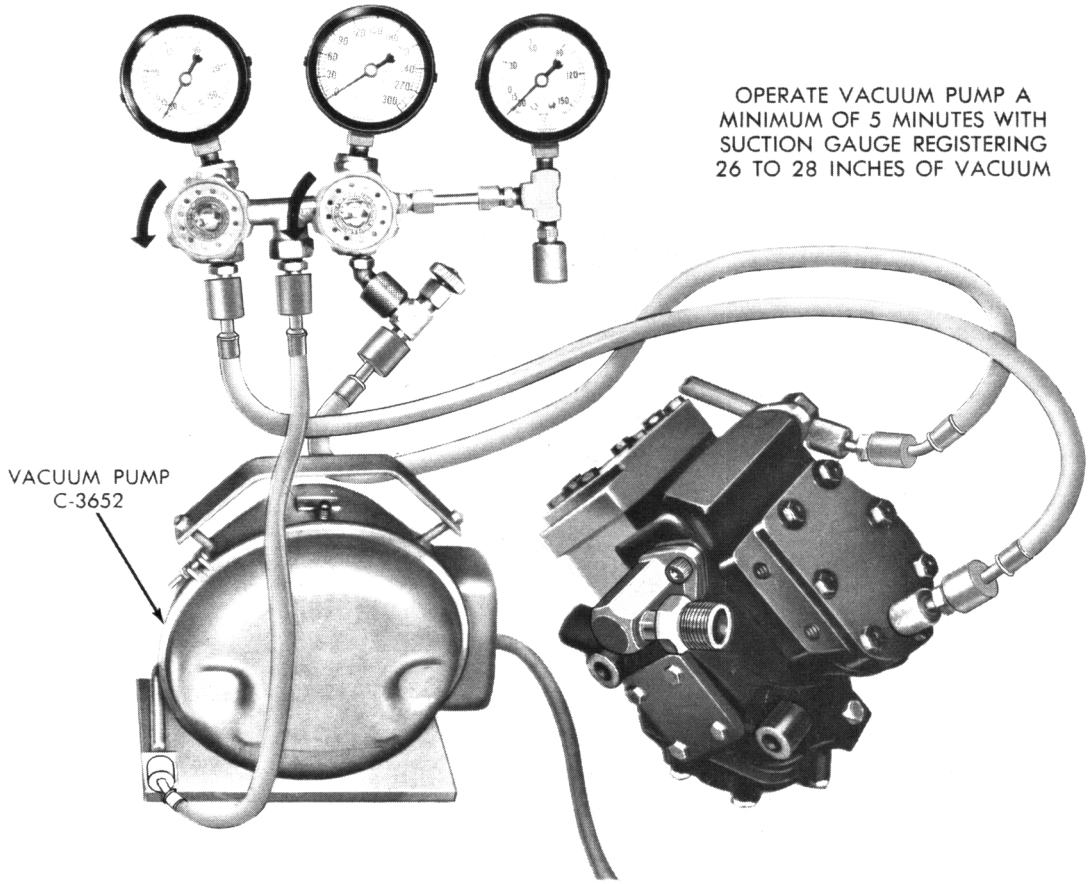

Fig. 95—Evacuating the System—Valiant

perform a leak test while the sweep-test charge is in the system. Stop the engine and disconnect the test hoses and adapters from the compressor service ports.

TESTING THE SYSTEM FOR LEAKS

The leak detector torch Tool C-3569 is a propane gas-burning torch used to locate a leak in any part of the refrigeration system. Refrigerant gas drawn into the sampling or "snifter" tube will cause the flame to change color in proportion to the size of the leak. A very small leak will produce a flame color varying from yellowish-green to bright green. A large leak will produce a brilliant blue flame.

CAUTION: Do not use the lighted detector in any place where explosive gases, dust, or vapor are present. Do not breathe the fumes that are produced by the burning of refrigerant gas. Large concentrations of refrigerant in the presence of a live flame become dangerously toxic. Observe the flame through the window of the burner shield, not through the top of the shield.

(1) Open the torch valve until you hear a faint hiss of escaping gas. Light the test torch and adjust the valve until the flame is very small. A small flame will detect large as well as small leaks, whereas, a large flame will detect only large leaks. As soon as the reaction plate seen through the window in the burner shield becomes red hot, the tester is ready for use.

(2) Examine all the tube connectors and other possible leak points by moving the end of the sampling hose from point to point. Since Refrigerant 12 is heavier than air, it is good practice to place the open end of the sampling hose directly below the point being tested. Be careful not to pinch the sampling tube since this will shut off the air supply to the flame and cause a color change.

(3) Watch for a change in the color of the flame. Small leaks will produce a green color and large leaks a bright blue color. If leaks are observed at the tube fittings, tighten the connection, using the proper flare wrenches, and retest.

If the flame remains bright yellow when the tester is removed from a possible leak point, insufficient air is being drawn in through the sampling tube, or the reaction plate is dirty.

REMOVE SWEEP-TEST CHARGE

If the system is free of leaks, or after correcting a leak, and if no air-conditioning components have been removed, add the necessary refrigerant as described under "Correcting the Low Refrigerant Level." If any parts of the refrigerant system were disconnected remove the sweep-test charge. Close the refrigerant

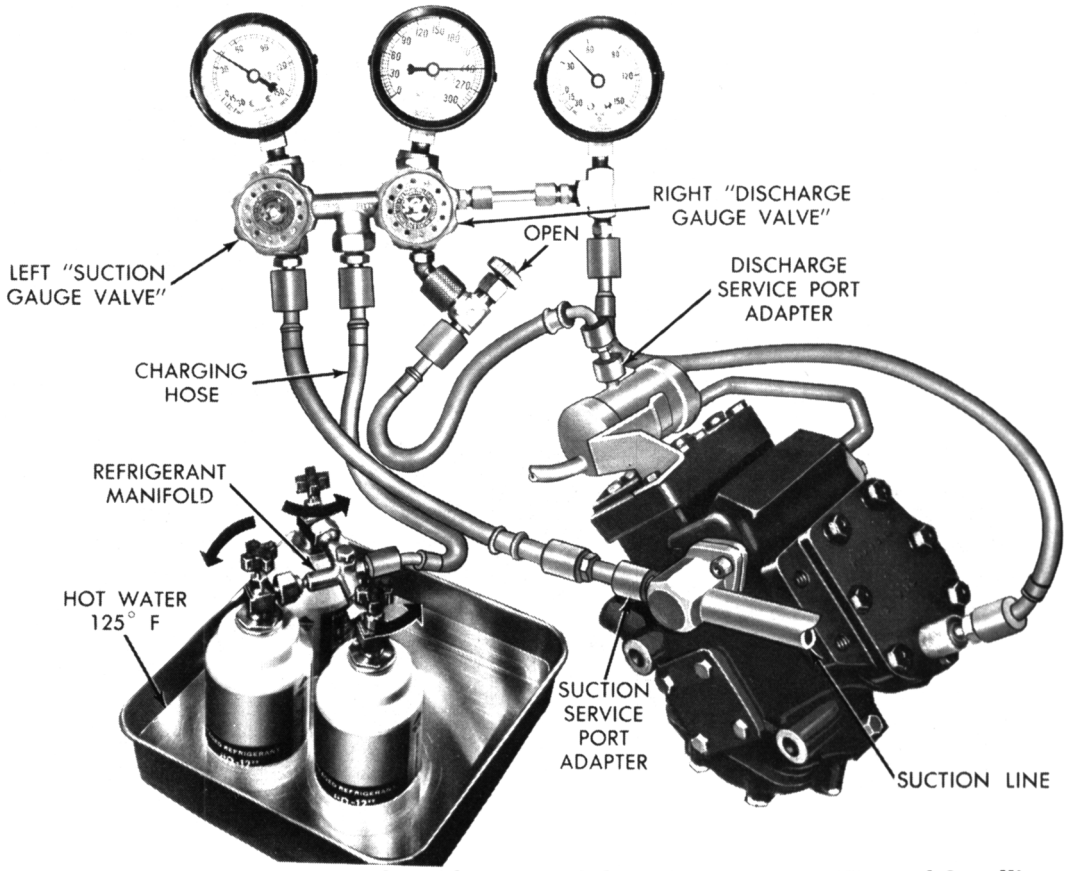

Fig. 96—Complete Charging of the System—Fury, VIP, and Satellite

manifold valve so that any refrigerant remaining in the container is sealed. Remove the long test hose from the refrigerant manifold. Insert the free end of this test hose into an exhaust system outlet. Open the right-hand gauge set manifold valve a fraction of a turn to let the sweep-test charge escape slowly. Allow the system to discharge until the discharge pressure gauge registers zero. Open the left-hand gauge valve to allow any refrigerant trapped in the suction side of the system to escape.

REPLACE THE RECEIVER-DRIER-STRAINER

The system must be discharged and swept with a test charge before replacing the receiver-drier-strainer.

To remove the receiver-drier, simply unscrew it at the fittings. When installing a new receiver-drier, use new "O" rings. Tighten the new unit to 40 foot-pounds. **Do Not** overtighten as this might damage the "O" rings.

CAUTION: Replacement receiver-drier-strainer units must be sealed while in storage. The drier used in these units is so hungry for moisture that it can saturate quickly upon exposure to the atmosphere. When installing a drier, have all tools and supplies ready for quick reassembly to avoid keeping the system open any longer than necessary.

EVACUATE THE SYSTEM

Whenever the system has been opened to atmosphere, it is absolutely essential that the system be swept with refrigerant and evacuated or "vacuumed" to remove all the air and the moisture. If any appreciable amount of air remains in the system when it is charged, the trapped air will concentrate near the top of the condenser and cause abnormally high discharge pressure. Air in the system will reduce the condenser's ability to condense the refrigerant gas and supply adequate liquid refrigerant to the evaporator. To evacuate the system, proceed as follows:

(1) Connect gauge set manifold to compressor and long test hose from gauge set manifold center connection to vacuum pump, Tool C-3652, as shown in Figures 94 and 95.

(2) Open both gauge set manifold valves, and the needle valve.

(3) Start the vacuum pump and operate until the evaporator suction gauge registers at least 26 inches of vacuum. If system is tight and pump in good condition, vacuum will go as low as 28 inches.

(4) Allow vacuum pump to operate with the suction gauge registering 26 to 28 inches of vacuum for a minimum of five minutes.

(5) Close both gauge set manifold valves, turn off vacuum pump and remove test hose from vacuum pump. Leave gauge set manifold connected to compressor. Charge system with proper amount of Refrigerant 12. **Failure to pull at least 26 inches of vacuum indicates a leak in the refrigeration system or a defective vacuum pump. Locate and correct the trouble before recharging the system.**

CHARGING THE SYSTEM (Figs. 96 and 97)

An accurate scale must be used to insure charging with the proper amount of refrigerant.

The special refrigerant dispensing manifold permits charging three full cans of refrigerant at one time.

REFRIGERANT CHARGE

	Single	Dual*
Fury, VIP and Satellite	3 lbs. 2 oz. to 3 lbs. 6 oz.	4 lbs. 2 oz. to 4 lbs. 6 oz.
Valiant	2 lbs. 10 oz. to 2 lbs. 14 oz.	

* Not used on Satellite Models

Keep the refrigerant manifold valves capped when not in use. Keep a supply of extra refrigerant-can-to refrigerant-manifold gaskets on hand so that gaskets can be replaced periodically. This will insure a good seal without excessive tightening of the can or the manifold nuts.

(1) Attach center hose from gauge set manifold to refrigerant dispensing manifold. Turn refrigerant manifold valves completely counterclockwise so they are fully open. Remove protective caps from refrigerant manifold.

(2) Screw refrigerant cans into manifold. Be sure manifold-to-can gasket is in place and in good condition. Tighten can and manifold nuts to 6 to 8 foot-pounds.

(3) Turn three refrigerant manifold valves completely clockwise to puncture the cans and close the manifold valves.

(4) Turn refrigerant manifold valves counterclockwise to open them.

(5) Momentarily loosen the charging hose at the gauge set manifold to allow the refrigerant gas to purge air out of the charging hose.

(6) Place the three cans of refrigerant into a pan containing hot water at a temperature of 125 degrees F.

(7) Start engine and adjust speed as follows:

(a) Charge the system through the suction side of the system by slowly opening the left-hand gauge set manifold valve. Adjust valve as necessary so charging pressure does not exceed 50 psi. Maintain the tem-

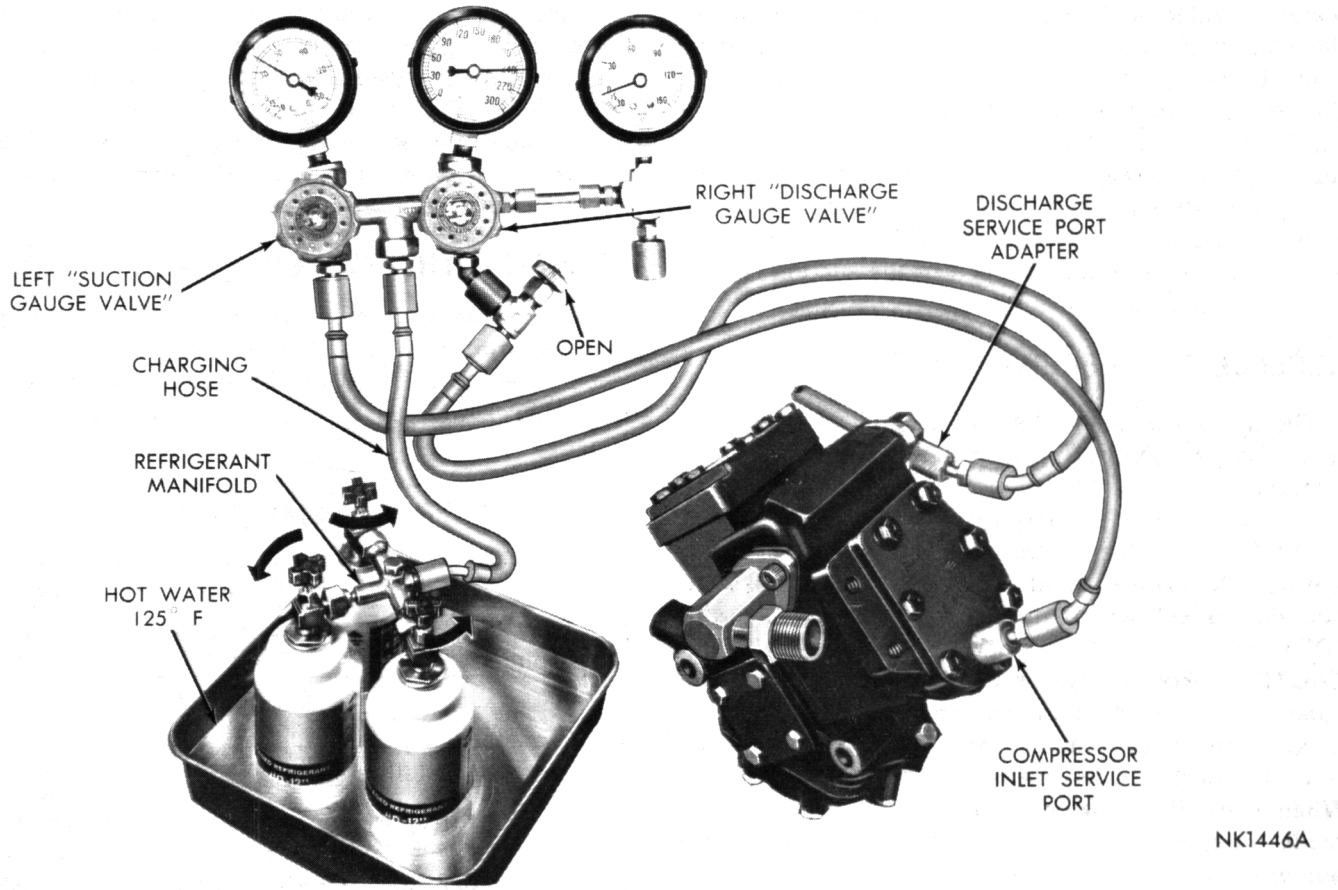

Fig. 97—Complete Charging of the System—Valiant

	Engine	Engine R.P.M.
Fury, VIP and Satellite	6 Cyl.	1600
	8 Cyl.	1300
Valiant	6 Cyl.	1250
	8 Cyl.	1000

perature of the water in the pan by adding warm water as necessary.

(b) When all three cans of refrigerant are completely empty, close gauge set manifold valves and refrigerant manifold valves.

(c) If more than three cans of refrigerant are necessary to complete charge repeat steps two through six.

EXPANSION VALVE TEST DUAL UNIT (Roof Unit)

The expansion valves for the front and rear units of a dual unit installation will have to be tested separately as follows:

(a) Close car doors and windows and operate the engine at 800 rpm. Set air conditioning controls at "Max A/C", high blower and temperature control lever to full reheat position.

(b) Operate the system for a few minutes to obtain partial stabilization and sufficient reheat to load the evaporator. The pressure at the discharge service port should read between 140 and 210 psi. before starting the test, (expansion valve thermo bulb in well).

(c) Place the sensing element thermo bulb of the rear unit expansion valve in a salt and ice water brine which is at a temperature of 18°F., or lower and place the expansion valve thermo bulb of the front unit in a container of 32°F., ice water. The evaporator suction pressure should read 21 to 28 psi. The compressor inlet pressure should be 22 psi or less. If the compressor inlet pressure is higher than 22 psi, the EPR valve should be replaced. If the evaporator suction pressure is greater than 28 psi., the EPR valve cannot be checked until after the expansion valve passes the test. Read Step (g) and continue with the test, Step (d).

(d) Remove the front unit thermo bulb from the ice water and hold the bulb in your hand for several minutes until the suction pressure stabilizes. The evaporator suction pressure should read a minimum of 40 psi. Any expansion valve which does not produce this reading is defective and should be replaced. With the evaporator suction pressure reading a minimum of 40 psi under the conditions in step (d) above, the compressor inlet pressure should read 1 to 4 psi less. If the compressor inlet pressure is more than 4

psi less than the evaporator suction pressure, the EPR valve is defective and should be replaced.

(e) Then, place the front unit expansion valve thermo bulb in the 18°F., ice water and brine solution and place the rear unit thermo bulb in the 32°F., ice water solution. The evaporator suction pressure should read 17 to 25 psi.

(f) Remove the rear unit expansion valve thermo bulb from the ice water solution and hold the bulb in your hand for several minutes until the suction pressure stabilizes. The evaporator suction pressure should read a minimum of 35 psi. Any expansion valve which does not produce this reading is defective and should be replaced.

(g) If the evaporator suction pressure was greater than 28 psi. (step (c) and 25 psi. (step (e), one or possibly both of the expansion valves are stuck open. The expansion valve that produced the least evaporator suction pressure change when its thermo bulb was moved from in the 32°F., ice water to in the hand location, is stuck open and should be replaced. After replacing the defective expansion valve, charge the system and repeat the testing of the other expansion valve.

If the expansion valve passes Tests (a) through (g), then the compressor valve plate should be removed and the gaskets and valves inspected. Replace gaskets and any damaged valve plate assemblies. **Make sure that all of the old gasket material is removed from the valve plates, cylinder head and crankcase before rebuilding the compressor.**

AUTO TEMP

FURY AND V.I.P.

INDEX

	Page		Page
General Information	67	Wiring Diagram	83
Operating Controls	67	Test Connections	70
Major Components	69	System Test Procedure	76
Service Diagnosis	71	Vacuum Circuits	85
Service Procedures	76	Performance Tests	86
Push Button Control Chart	78		

GENERAL INFORMATION

The Auto-Temp System automatically controls the heating and air conditioning operation of the vehicle to maintain a selected interior temperature. In cold weather, the system provides heat. In warm weather the system provides cool dehumidified air.

The unit will heat or cool according to interior temperature, ambient temperature and control setting; in varying degrees of either heating or cooling without any action on the part of the operator other than dialing a desired temperature and setting the system on "Auto".

The basic air conditioning package is the same as that used for the standard heater-air conditioning system (Fig. 1). The controls have been changed and various sensors and components have been utilized to compose the "Auto-Temp" system.

OPERATING CONTROLS

The Automatic Temperature Controls are located in the center of the instrument panel and consist of a thumbwheel selector and five push-button switches.

Thumbwheel Selector

Thumbwheel selector operates similar to a home thermostat. The thumbwheel has 5 numbers, 65-70-75-80-85, to allow the operator to select a corresponding interior temperature (Fig. 2).

Pushbutton Switches

Off—System will not operate (servo will be properly positioned but the blower will not operate and the fresh air door will be closed).

Auto—Blower will automatically remain off and the fresh air door will remain closed (if heating is required) until water temperature reaches 125°F. —temperature controlled discharge air will then come out of the heater slots (with normal defrost bleed) or the air conditioning outlets as required by the system. There are five blower speeds available on the air conditioning mode of operation and four available on the heat mode (the maximum blower speed on air conditioning is higher than the maximum blower speed on heat).

Hi Auto—Same as "Auto," except the blower will operate at the higher speeds only. There are three blower speeds available on the air conditioning mode and two available on the heat mode of operation (again the maximum blower on air conditioning is

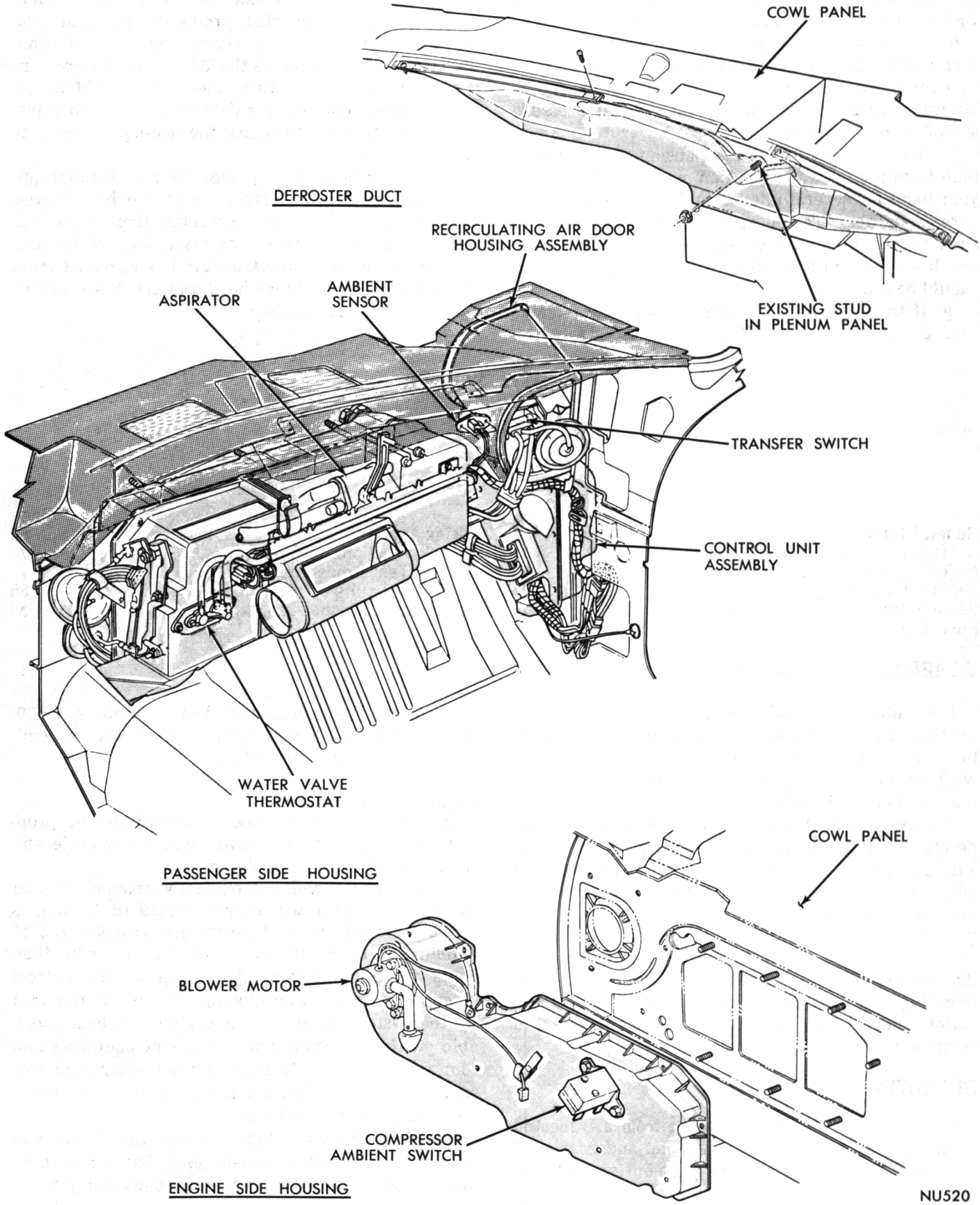

Fig. 1—Auto-Temp Housing Assemblies

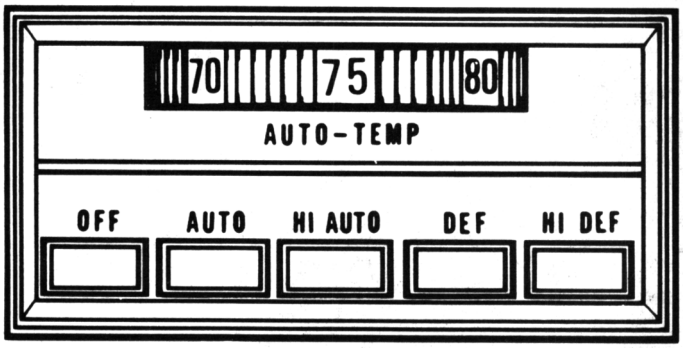

Fig. 2—Push Button Control

higher than the maximum blower on heat and the speeds are slightly higher in the "Hi-Auto" position). **This position is available to allow the operator to select the higher blower speeds that are required to:**

(1) Maintain comfort during city traffic operation where air distribution may be inadequate.

(2) Satisfy the rear seat passengers under extreme conditions.

(3) Provide adequate smoke removal under extreme conditions.

Def—Blower will come on immediately, air will come out of defroster outlets (with normal heat bleed)—system will then control the same as "Auto" except the blower will operate at the two highest speeds only (the speeds being those used on the heat mode of operation). **Since the system controls in the "Def" position, it is possible to have maximum air conditioned air deposited on the windshield (and at the same time obtaining the higher blower speed that is available on the air conditioning mode of operation). However, it is not probable that the system would be operated in the "Def" position while requiring full cooling on the car interior.**

Hi-Def—Same as "Def" except blower will operate on high speed (used on the heat mode of operation) only and discharge air will be maximum temperature.

Both "Def" and "Hi Def" positions override a vacuum circuit to start the blower, regardless of water temperature. Therefore, if the operator returns to either the "Auto" or "Hi Auto" position, the blower will remain on, even though the water temperature is still below 125°F. However, the blower may be turned off by depressing the "Off" button.

In all of the positions except "Off," the compressor will operate if the ambient temperature is above 32°F.

MAJOR COMPONENTS (Fig. 3)

In-Car Sensor

This sensor is located in a grille to the right of the steering column in the radio bezel. It senses car interior temperature and automatically signals the control unit to compensate for any variation from the selected comfort setting.

Temperature Control Dial (Thumbwheel)

This control is located above the push buttons in the control head. It allows the operator to select any interior comfort setting from 65 to 85. Movement of the thumbwheel controls a resistance potentiometer which is part of the assembly. The potentiometer will create the proper resistance to signal the control unit so that it will control at the selected comfort setting.

Evaporator Temperature Regulator Switch (Anti-Frost Control System)

This switch is located on the right end of the passenger side housing. It has a sensing capillary routed through the evaporator coil fins. This control allows the evaporator to maintain a minimum air temperature without freezing. The Anti-Frost control system consists of a second unit, the **evaporator temperature regulator valve (ETR).** This valve is located at the compressor suction fitting (same place as the regulator EPR valve). It consists of an electrical solenoid which is actuated by the evaporator temperature regulator switch which senses coil fin temperature. When the solenoid is energized the valve closes and stops the flow of refrigerant to the compressor.

Master On-Off Switch

This switch is located on the right end of the passenger side housing and is color coded green. It is vacuum operated and turns on the blower when 8 inches of vacuum is applied.

Compressor Switch (Vacuum)

This switch is color coded yellow and is located on the rear cover of the air conditioning unit just to the left of the master on-off switch. It is vacuum operated and actuates the compressor clutch when 2 inches of vacuum is applied (if the compressor ambient switch is closed).

Water Valve Thermostat

This thermostat is located on the face of the rear cover of the air conditioning unit. It is vacuum operated and temperature compensated and in conjunction with the water valve, controls the discharge air temperature. The thermostat receives the same vacuum as the control unit and then sends modulated vacuum to the water valve to control the amount of engine coolant to the heater core.

Compressor Ambient Switch

This switch is located on the face of the engine side housing. It has a sensing capillary protruding through the bottom of the housing in front of the

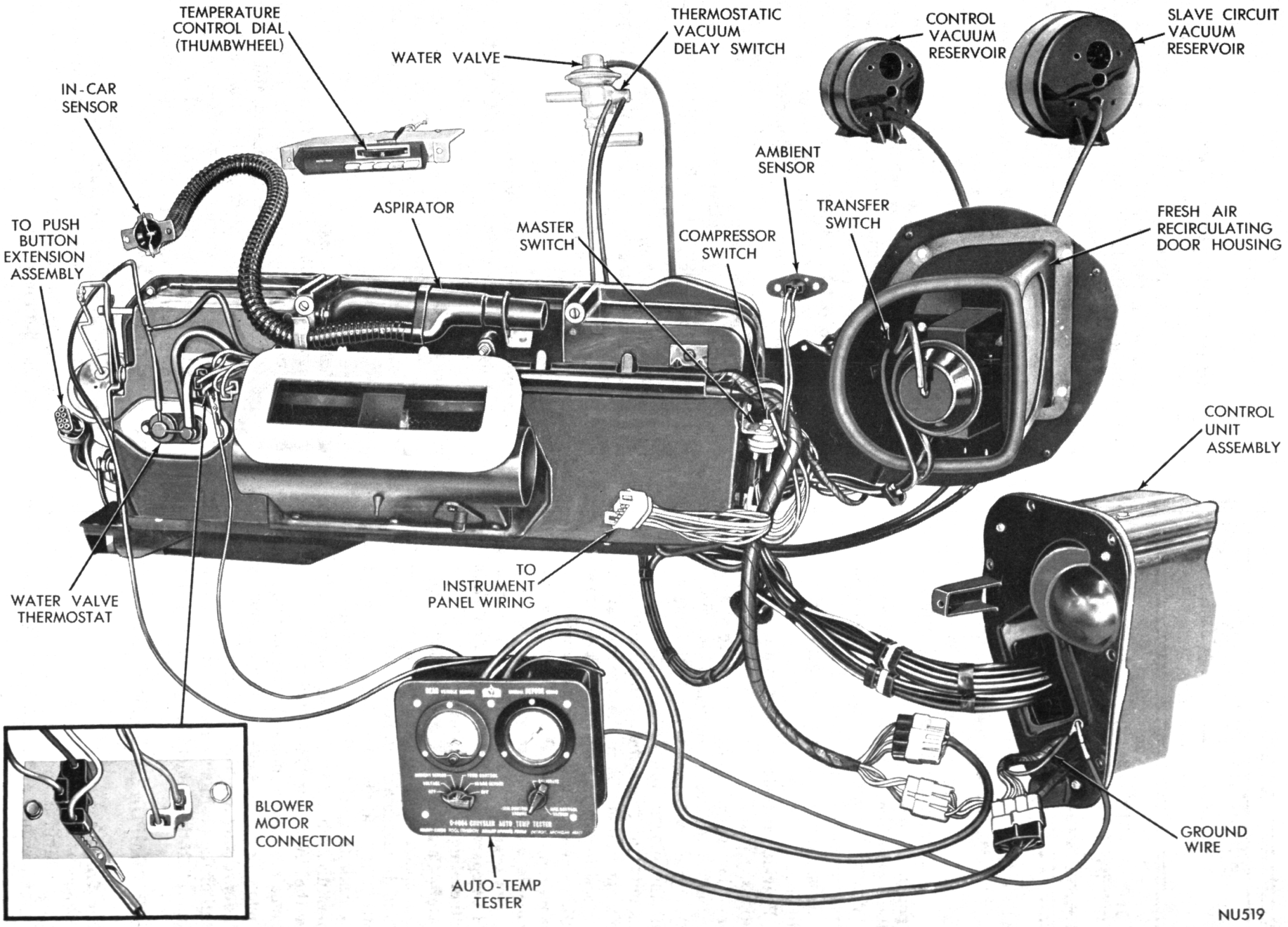

Fig. 3—Auto-Temp Components and Test Connections

blower inlet. The compressor switch completes the electrical circuit to the clutch if the ambient (outside) temperature is above 32°F. Due to its location, the switch will become heated periodically during the winter by brief shut downs of the Auto-Temp or the engine. On re-starts, the compressor will operate briefly and allow the seals of the compressor to be lubricated.

Vacuum Transfer Switch

This switch is located in the fresh/recirculating air door housing. The switch holds the fresh/recirculating air door in one of three positions: OFF, 20% Fresh Air and 100% Fresh Air. The three positions are accomplished by the use of the regulator vacuum actuator, a spring and the transfer switch.

Thermostatic Vacuum Delay Switch

This switch is located on the water valve in the engine compartment. It is an integral part of the water valve and is controlled by a wax pellet that is sensitive to water temperature. The switch delays the start of the blower, by not allowing the vacuum circuit to the blower master switch to be completed on AUTO or HI-AUTO position (heat mode) until the engine water temperature reaches 125°F. At that point the switch opens and allows vacuum to the master switch completing the electrical circuit to the blower motor. Vacuum to vacuum transfer switch allows switch to position door in 100% fresh air position.

Ambient Sensor

This sensor is located in the dash panel behind the glove box. The ambient sensor senses the outside temperature. It signals the control unit to make adjustments to the system that are required to maintain a constant interior comfort level regardless of outside temperature changes.

Control Unit Assembly

This unit is located in place of the right side cowl vent assembly. It is the control unit of the system and consists of a power servo, amplifier and transducer. If the unit is found defective, it is to be replaced as an assembly and no attempt shall be made to service it internally.

SERVICE DIAGNOSIS

Condition	Possible Cause	Correction
SYSTEM OPERATES ONLY ON MAXIMUM COOLING AND HI-BLOWER	(a) Vacuum leak external to control unit assembly.	(a) Inspect vacuum connections at water valve thermostat, control unit assembly, and engine components.
	(b) Internal control unit assembly leak.	(b) Test control unit assembly, replace if leaking.
	(c) A short circuit in the ambient or in-car sensor.	(c) Inspect wiring, repair short or replace sensor.
	(d) An open circuit in the temperature control dial potentiometer.	(d) Test wiring, replace potentiometer if necessary.
	(e) Defective control unit assembly.	(e) Test control unit assembly, replace if necessary.
	(f) No vacuum input to control unit (crossed hoses at control vacuum reservoir or at control unit, pinched hose).	(f) Check vacuum lines.
SYSTEM OPERATES ON AIR CONDITIONING MODE AT ALL TIMES WITH CONTROLLED AIR TEMPERATURE	(a) Damper linkage binding, from improper adjustment.	(a) Re-adjust linkage.
	(b) Vacuum not supplied to rod side of mode actuator.	(b) Check vacuum line connection (plugged or disconnected at actuator fitting. Check for pinched vacuum line).
SYSTEM OPERATES ONLY ON MAXIMUM HEATING AND M3.	(a) An open circuit in the in-car sensor.	(a) Test wiring, repair or replace sensor.
	(b) A short circuit in the temperature control dial potentiometer.	(b) Test wiring, repair or replace potentiometer.
	(c) Defective control unit assembly.	(c) Test control unit assembly, replace if necessary.
	(d) An open circuit in the ambient sensor.	(d) Test wiring, repair or replace sensor.
SYSTEM OPERATES ON HEAT MODE AT ALL TIMES	(a) An open circuit in the ambient sensor.	(a) Test wiring, repair or replace sensor.
	(b) Damper linkage binding from misadjustment.	(b) Readjust properly.
	(c) Vacuum not supplied to pot side of mode actuator.	(c) Inspect vacuum line connection (plugged or not connected at actuator fitting. Check for pinched vacuum line).

Condition	Possible Cause	Correction
SYSTEM PUTS OUT ONLY HOT AIR IN ALL MODES AT ALL TIMES.	(a) Defective water valve thermostat. (b) Defective water valve (stuck open). (c) Water valve thermostat not sensing representative air temperature.	(a) Replace if necessary. (b) Replace if necessary. (c) Check for abnormal cold air in area of thermostat (missing seals inside evaporator package or partially plugged heater core). Repair or replace package.
SYSTEM PUTS OUT ONLY COLD AIR IN ALL MODES AT ALL TIMES.	(a) Defective water valve thermostat. (b) Defective water valve (stuck closed). (c) Kinked water hose. (d) No vacuum to water valve (pinched or disconnected vacuum line to water valve or to thermostat).	(a) Replace if necessary. (b) Replace if necessary. (c) Inspect hoses. (d) Inspect lines.
BLOWER AND COMPRESSOR WILL NOT OPERATE, AND SYSTEM WILL NOT GO INTO SELECTED MODE	(a) A failed (open) circuit. (b) A vacuum leak at engine fitting source or slave circuit tank in engine compartment. (c) A loose connection between harness and push button switch. (d) A defective (leaking) vacuum harness connector at push button switch. (e) A defective (leaking) push button switch. (f) Vacuum hose leak in slave circuit. (g) Crossed vacuum lines at slave system vacuum reservoir. (h) Pinched vacuum line in slave circuit.	(a) Replace if necessary. (b) Check vacuum connections. (c) Connect properly. (d) Replace harness. (e) Replace switch. (f) Inspect all connections, repair if possible, replace if necessary. (g) Inspect lines. (h) Inspect lines.
BLOWER WILL NOT OPERATE ON ANY MODE	(a) Blower motor wiring disconnected. (b) Defective blower motor. (c) Vacuum operated master on-off switch defective. (d) A vacuum leak in slave circuit. (e) Resistor block burned out. (f) Pinched vacuum line to master switch.	(a) Connect properly. (b) Check by connecting directly to battery. Replace if necessary. (c) Test and replace if necessary. (d) Inspect for leaks and correct. (e) Replace. (f) Inspect lines.
COMPRESSOR WILL NOT OPERATE AT ANY TIME	(a) Clutch wire disconnected. (b) Vacuum operated compressor switch, defective. (c) Compressor ambient switch, defective. (d) Ambient is below 32°F. (e) Pinched vacuum line to compressor switch.	(a) Connect. (b) Test and replace if necessary. (c) Test and replace if necessary. (d) Instruct owner that compressor operates only at ambients above 32°F. (e) Inspect lines.
AIR CONDITIONING AND HEAT MODES REVERSED (HOT AIR FROM CONDITIONING OUTLETS AND COLD AIR FROM HEAT OUTLETS)	(a) Air conditioning and heat mode actuator vacuum hoses reversed.	(a) Route properly (white to pot side, red to shaft side).
AIR COMING OUT OF AIR CONDITIONING OUTLETS WHEN SYSTEM IS IN THE DEFROST OR HI-DEFROST POSITION	(a) Vacuum hoses to pot side of mode actuator and pot side of defrost actuator reversed. (b) Air conditioning and heat and heat and defroster mode actuator vacuum hoses interchanged and reversed on actuators.	(a) Route properly. (b) Route properly.

Condition	Possible Cause	Correction
MOST OF THE AIR COMING OUT OF DEFROSTERS WHEN SYSTEM SHOULD BE ON THE HEAT MODE	(a) Vacuum hoses to shaft side of mode actuator and pot side of defrost actuator reversed.	(a) Route properly. (Red to shaft side, white to pot side).
	(b) Air conditioning door binding on air distribution duct.	(b) Reinstall properly.
AIR COMES OUT OF THE DEFROSTERS WHEN THE SYSTEM SHOULD BE IN HEAT MODE, AND AIR COMES OUT OF HEATER OUTLETS WHEN SYSTEM SHOULD BE IN AIR CONDITIONING.	(a) All vacuum lines to mode and defrost actuators completely crossed.	(a) Route properly.
	(b) Linkage misadjustment.	(b) Readjust.
AIR COMES OUT OF ALL OUTLETS WHEN THE SYSTEM SHOULD BE IN DEFROST OR AIR CONDITIONING. AIR COMES OUT THE AIR CONDITIONING OUTLETS WHEN THE SYSTEM SHOULD BE IN HEAT MODE.	(a) All vacuum lines to mode and defrost actuators completely crossed.	(a) Route properly.
	(b) Linkage misadjustment.	(b) Readjust.
SYSTEM WILL NOT CHANGE MODE IN AUTO OR HI-AUTO (EVEN WITH TESTER OPERATING CONTROL UNIT)	(a) Doors binding or linkage bent or misadjusted.	(a) Repair or adjust linkage.
AIR COMING OUT OF DEFROSTER WHEN SYSTEM SHOULD BE THE AIR CONDITIONING MODE	(a) Air conditioning / heat and heat / defroster mode actuator hoses interchanged and reversed on actuators.	(a) Route properly.
	(b) Defrost button may be depressed.	(b) Instruct owner on proper operation of unit.
INSUFFICIENT AIR-FLOW OUT OF UPPER (AIR CONDITIONING) OUTLETS WHEN SYSTEM IS CALLING FOR MAXIMUM COOLING AND HI-BLOWER	(a) Air hoses disconnected from air conditioning outlets or distribution duct.	(a) Connect properly.
	(b) Failing blower motor.	(b) Test by connecting directly to battery.
BLOWER SPEEDS ALWAYS TOO GREAT ON AUTO	(a) Resistor block, faulty (resistors shorted).	(a) Repair or replace.
BLOWER SPEEDS ALWAYS TOO GREAT ON HI-AUTO	(a) Lower speeds not provided for Hi-Auto.	(a) Instruct owner on operation of unit.
SYSTEM BLOWS COLD AIR ON FEET AT THE START DURING COLD WEATHER OPERATION	(a) Thermostatic vacuum delay switch in water valve, faulty.	(a) Test and replace if necessary.
	(b) Blower master switch inoperative in closed position.	(b) Test and replace if necessary.
	(c) Vacuum bleed plugged.	(c) Inspect.
	(d) Check valve #2 failed open or reversed.	(d) Check connections, test and replace if necessary.
INSUFFICIENT HEAT WHEN MAXIMUM HEATING IS REQUIRED	(a) Water valve thermostat out of calibration or faulty.	(a) Check calibration, recalibrate or replace.
	(b) A vacuum leak at water valve or thermostat connections.	(b) Check visually, repair.
	(c) Water valve, faulty.	(c) Replace.
	(d) Heater core, faulty (plugged).	(d) Replace.
	(e) Vacuum line from control unit to water valve thermostat or from thermostat to water valve pinched.	(e) Inspect lines.

Condition	Possible Cause	Correction
ERRATIC TEMPERATURE CONTROL	(a) Heater hoses reversed at core inlet and outlet tubes.	(a) Route properly.
	(b) Air in heater core.	(b) Press Hi-Defrost to open water valve fully and run engine at approximately 1500 rpm for about three minutes.
	(c) Radiator water level low.	(c) Fill as required.
	(d) Loose vacuum or electrical connection at control unit assembly.	(d) Inspect connections.
	(e) Faulty water valve (sticking).	(e) Check and replace if necessary.
	(f) Water valve thermostat faulty.	(f) Check and replace if necessary.
INSUFFICIENT COOLING WHEN MAXIMUM COOLING IS REQUIRED	(a) ETR valve stuck closed.	(a) Check by energizing solenoid directly from battery.
	(b) Refrigeration system low on refrigerant.	(b) Test for leaks, repair, and add charge according to procedure.
	(c) ETR switch cut-in setting too high.	(c) Test according to procedure.
	(d) Expansion valve.	(d) Test according to procedure.
	(e) Clutch not running (pinched vacuum line to compressor switch, wires not connected or high resistance compressor switch).	(e) Inspect vacuum lines and electrical connections, check for high resistance by replacing switch with a jumper wire, replace switch if necessary.
	(f) Fresh air door stuck in 100% fresh air position (broken return spring or defective vacuum transfer switch.)	(f) Inspect spring, test vacuum transfer switch, replace if necessary.
DISCHARGE AIR TOO COLD AT TIMES	(a) ETR valve or switch leads disconnected.	(a) Connect.
	(b) ETR valve failed (open).	(b) Check by energizing solenoid directly from battery, replace if necessary.
	(c) ETR switch failed (capillary broken).	(c) Replace.
	(d) ETR switch capillary not properly installed.	(d) Install properly.
AFTER APPROXIMATELY ONE HOUR OF SUSTAINED DRIVING AIRFLOW DROPS OFF TO PRACTICALLY NONE, WHILE BLOWER CAN BE HEARD OPERATING AT A HIGH SPEED	(a) Evaporator coil freeze-up, same causes as in "Discharge Air Too Cold At Times."	(a) Same as in "Discharge Air Too Cold At Times".
	(b) ETR switch setting too low.	(b) Check out according to Auto-Temp component test procedures.
AIR COMES OUT OF AIR CONDITIONING OUTLETS OR HEAT OUTLETS WHILE DRIVING IN THE "OFF" POSITION	(a) Fresh/Recirculating door in Fresh Air position (vacuum hoses on Fresh Air door actuator reversed).	(a) Route properly.
	(b) Blower master switch (failed in closed position).	(b) Test and replace if necessary.
	(c) Fresh air door not sealing properly.	(c) Check for binding door or damaged seals. Repair.
	(d) Check valve #2 reversed or failed closed.	(d) Check connections, test and replace if necessary.
OBJECTIONABLE ODORS BEING DISCHARGED THROUGH THE AIR CONDITIONING OR HEAT OUTLETS	(a) Fresh/Recirculating door in recirculating air position (vacuum hoses on Fresh Air door actuator reversed).	(a) Route properly.
SYSTEM QUITS ON ACCELERATION	(a) Vacuum reservoir leaking.	(a) Check for leak, repair or replace, as necessary.
	(b) Slave vacuum-reservoir tank check valve.	(b) Test and replace if necessary.
	(c) A vacuum leak in slave system.	(c) Inspect all connections, repair if possible, replace if necessary.
	(d) Check valve #1 reversed or failed open.	(d) Check connections, test and replace if necessary.

Condition	Possible Cause	Correction
SYSTEM WILL NOT GO TO MAXIMUM HEAT ON HI-DEFROST	(a) Defrost override circuit in amplifier of control unit assembly, defective.	(a) Check unit for proper performance.
	(b) Hi-Defrost feed from push button switch to amplifier not connected at switch.	(b) Connect.
	(c) Push button actuated Hi-Defrost feed switch in control head, faulty.	(c) Replace push button switch.
SYSTEM SHUTS OFF WHEN HI-DEFROST BUTTON IS PUSHED AND GOES TO HI-DEFROST WHEN THE OFF BUTTON IS PUSHED	(a) Push button switch reversed (push button extensions incorrectly installed).	(a) Visually inspect switch (vacuum ports and electrical terminals are located left and right side of switch respectively, as viewed by passenger if switch is properly installed). Remove and reassemble if necessary.
SYSTEM DOES NOT ACHIEVE A COMFORTABLE CONDITION—SYSTEM LEVELED OUT	(a) Control dial potentiometer out of calibration.	(a) Test and recalibrate if possible, replace if necessary.
	(b) Control unit assembly out of calibration.	(b) Test and replace if necessary.
	(c) Air conditioning outlets not directed properly.	(c) Instruct owner on positioning of outlets and/or on moving control dial slightly to attain his comfort level.
	(d) Aspirator not operating properly (pinched or disconnected tube).	(d) Test aspirator and tube. Repair or replace if necessary.
SYSTEM DOES NOT ACHIEVE A COMFORTABLE CONDITION—ERRATIC CHANGES OF TEMPERATURE AND POSSIBLY BLOWER SPEED.	(a) Loose electrical connection at sensors or at control unit.	(a) Inspect connections.
	(b) Loose electrical connection or other fault in control unit.	(b) Test control unit, replace if necessary.
SYSTEM DOES NOT ACHIEVE A COMFORTABLE CONDITION—CYCLING OF TEMPERATURE AND POSSIBLY BLOWER SPEED.	(a) Defective control unit (excessive play in power servo).	(a) The control vacuum at the calibration point on decreasing vacuum should be within 1 inch of the reading on increasing vacuum.
	(b) Vacuum leak in control unit, in the water valve thermostat, or at the connections to them.	(b) Check connections, check control unit and thermostat for leaks. Replace if necessary.
	(c) Aspirator not operating properly (pinched or disconnected tube).	(c) Test aspirator and tube. Repair or replace if necessary.
SYSTEM DOES NOT ACHIEVE A COMFORTABLE CONDITION—TEMPERATURE SLOWLY DRIFTS UP AND DOWN.	(a) Aspirator not operating properly (pinched or disconnected tube).	(a) Test aspirator and tube. Repair or replace if necessary.
	(b) Frayed or bare sections in sensor leads.	(b) Inspect sensor leads. Repair or replace.
BLOWER DOES NOT SHUT OFF WHEN "OFF" BUTTON IS PUSHED.	(a) Check valve #2 failed closed or installed backwards.	(a) Check routing and replace if necessary.
	(b) Defective pushbutton switch.	(b) Check switch according to push button control chart.
BLOWER DOES NOT COME ON IN "DEFROST" OR "HI-DEFROST" WHEN THE ENGINE IS COLD.	(a) Check valve #1 failed closed or installed backwards.	(a) Test and replace if necessary.
BLOWER SPEED CHANGES WITH CHANGES IN CAR VOLTAGE (CAR IS ACCELERATED OR ACCESSORIES ARE TURNED ON OR OFF).	(c) Defective control unit.	(a) Test control unit and replace if necessary.

AUTO-TEMP COMPONENTS

SERVICE PROCEDURES

Satisfactory performance of the Auto-temp system is dependent upon proper operation and adjustment of all operating controls, as well as proper functioning of all system components. The inspection, tests and adjustments should be used to locate the cause of a malfunction. The inspections and tests in this manual have been arranged in a logical sequence that has proved to be the surest and shortest route to accurate diagnosis. It is recommended that they be followed and performed in the order in which they are presented.

Test Connections

(Auto-Temp Tester C-4064)

With the use of the Auto-Temp Tester (C-4064) (Fig. 3), a thorough operational check can be performed on the system, and some of the components. Connect the tester according to procedure:

(1) Remove right cowl trim panel.

(2) Disconnect electrical harness eight terminal connector and connect tester in series with system harness and control unit harness (Fig. 3).

(3) Remove left spot cooler duct.

(4) Raise blower motor three wire connector slightly off spade terminals, enough to attach aligator clip (Fig. 3). Black wire from tester. (Tan lead on blower motor resistor).

(5) Attach tester white wire to a good body ground.

(6) Tee in vacuum hose at the water valve thermostat. (Solid black hose).

Before performing any tests, the control potentiometer on the instrument panel must be set at 75 and must remain at this setting throughout all tests.

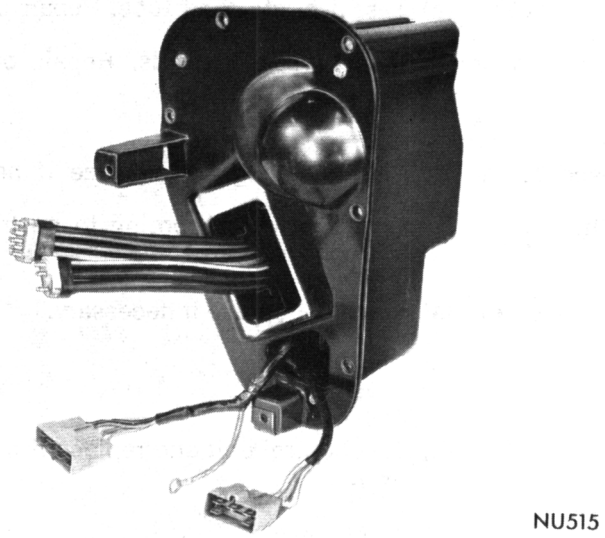

NU515

Fig. 4—Control Unit Assembly

Control Unit Calibration

With engine idle set at 1000 RPM and the voltmeter in the off position, depress the "Auto" button and slowly rotate control dial, on tester, from minimum vacuum to "calibrate". At this point the vacuum gauge should read 4 to 6 inches vacuum. Tap gauge and record this reading. Continue to increase vacuum to "Maximum" then slowly rotate control dial back to "Calibrate". Tap gauge. Reading must be within 1 inch Hg of the recorded reading, indicating the control unit is calibrated.

If the gauge readings are not within the given range, the control unit is out of calibration and must be replaced.

Sensor Tests

With engine running at idle RPM, rotate voltmeter dial from off to the "ambient sensor" position. Observe the voltmeter, if the indicator is in the red area to the left, the sensor is "shorted", if the indicator is in the red area to the right, the sensor is "open", in either case the sensor is faulty and must be replaced. The above procedure applies to the temperature control (set at 75), and in-car sensor.

CAUTION: Do not allow the voltmeter dial to remain in any of the sensor positions for more than 30 seconds, as voltage is being applied to the sensors and they may be damaged.

With the above instrumentation, a thorough operational check can be performed on the system, and some of the components. Refer to the push button control chart while performing the following steps:

SYSTEM TEST PROCEDURE

Start engine with system in the Off position and thermometer in right center outlet. Set control Vacuum Dial to obtain "O" vacuum on gauge. Set voltmeter on "Voltage". Adjust engine rpm to 1000. Observe the following:

(1) Vacuum should be zero.

(2) No reading on voltmeter.

Push the Hi-Auto Button. **Observe the following:**

(1) Vacuum should remain at zero.

(2) Compressor should be running and system should be in the air conditioning mode with fresh air door open to 20% Fresh air. (Above 32° Ambient).

(3) Blower should be running.

(4) Blower speed should be high if vacuum is less than 2.5 inches. Voltmeter should read approximately the same as supply voltage at the voltage regulator.

(5) Discharge air should be coming out of air condi-

tioning (upper) outlets and should be dropping towards 40°F.

If all the mentioned steps occurred as stated, the system is operating properly in this position.

Auto

Proceed as follows:

Push Auto button and slowly rotate control Vacuum Dial so vacuum at gauge goes from minimum to maximum in such a manner that the following may be observed taking place in the order shown:

(1) Blower speed drops one step.

(2) Fresh air door goes from 20% to 100% Fresh/Air at above 3.5 inches vacuum, no change in discharge air temperature.

(3) Blower speed decreases a second step, a slight increase in discharge air temperature (approximately 10°F.).

(4) Blower speed decreases a third step, an additional rise in discharge air temperature.

(5) Blower speed decreases a fourth step, an additional rise in air temperature.

(6) System goes from A/C mode to Heat mode at about 8.0 inches vacuum. Discharge air temperature is within 85°F. ± 10° before and after the mode switch.

(7) After the switch to Heat mode, the blower speed increases one step, an additional rise in discharge air temperature.

(8) Blower speed increases a second step, an additional rise in discharge air temperature.

(9) Blower speed increases a third step, discharge air temperature is at its maximum (approximately 140°F.), and vacuum is about 12 inches.

(10) Continue to move control such that vacuum increases to full source vacuum, note that there is no further change in blower speed and little or no increase in discharge air temperature.

Hi-Auto

Adjust Control Vacuum Dial so vacuum is above 8.0 inches.

Push Hi-Auto button and observe the following:

An increase in air velocity. Note voltage increase on voltmeter, there was no change of vacuum and little or no temperature change.

Defrost

Return to Auto position leaving vacuum at about 8 inches on either air conditioning or heat and proceed as follows:

Push defrost button and observe the following:

(1) Vacuum remained the same.

(2) Majority of air is coming out of defroster outlets and there is bleed air coming out of heater slots. No air should be coming out of A/C outlets.

(3) The air temperature should have remained essentially the same as in Auto.

(4) Blower speed increases.

Hi-Defrost

Push Hi-Defrost button and observe the following:

(1) Vacuum is increasing to full source vacuum.

(2) The air temperature at defroster outlets is rising to maximum heat.

(3) Blower speed increases.

(4) Control dial on tester is no longer effective.

CONTROL UNIT ASSEMBLY (Fig. 4)

If the control unit assembly is found defective, it is to be replaced as an assembly, and no attempts shall be made to service it.

It should be noted here that other component failures in the system can create the same symptoms as a defective control unit assembly. Therefore, a thorough check of other components should be made as directed in the service diagnosis charts before the control unit is replaced.

WATER VALVE THERMOSTAT

The thermostat is vacuum operated and temperature compensated, and in conjunction with the water valve, controls the discharge air temperature. It receives the same vacuum as the power servo and then sends modulated vacuum to the water valve to maintain a constant duct discharge air temperature.

To determine if the thermostat is performing properly, proceed with the following test:

(1) Connect a 0-29 inch vacuum gauge into the black with red tracer vacuum line at the thermostat using a "tee" connector. **When disconnecting vacuum lines, twist and pull at the same time to avoid stretching the hose.**

(2) Install the AUTO-TEMP tester as shown in Fig. 3, adjust the control vacuum to about 5 inches and depress the "AUTO" button on the instrument panel.

(3) Start the engine and allow it to run until it has attained normal operating temperature.

(4) Press the "Hi-Defrost" button and allow the defroster discharge air to become hot. The control vacuum should increase to at least 12 inches.

(5) Press the "Auto" button. The control vacuum should return to about 5 inches and the water valve vacuum should drop close to zero. As the air temperature stabilizes the water valve vacuum should return to about the same reading acquired before pressing the Defrost button.

WATER VALVE

The water valve is vacuum operated and with the thermostat controls the discharge air. It requires

PUSH BUTTON CONTROL CHART

Push Button Position	Control Vacuum	Fresh Air Door Position	Heat Door Position	AC Door Position	Defrost Door Position	Blower Motor Speed
OFF	Below 8 inches Hg.	0% F/A	Open	Closed	Closed	Off
	Above 8 inches Hg.	0% F/A	Closed	Open	Bleed	Off
AUTO	Minimum (0" Hg.)	20%	Open	Closed	Closed	Hi
Slowly rotate	↓	20%	Open	Closed	Closed	Hi to M3
vacuum control	3.5	100%	Open	Closed	Closed	M3
knob from minimum to maximum	↓	100%	Open	Closed	Closed	M3 to M2
	↓	100%	Open	Closed	Closed	M2 to M1
	↓	100%	Open	Closed	Closed	M1 to Lo
	7.5 to 9.0	100%	Closed	Open	Bleed	Lo
	↓	100%	Closed	Open	Bleed	Lo to M1
	↓	100%	Closed	Open	Bleed	M1 to M2
	12.0	100%	Closed	Open	Bleed	M2 to M3
	↓	100%	Closed	Open	Bleed	M3
Slowly rotate	12.0	100%	Closed	Open	Bleed	M3
vacuum control	↓					
knob from	6.5 to 7.5	100%	Open	Closed	Closed	Lo
maximum to	↓					
minimum	2.5	20%	Open	Closed	Closed	M3
	↓					
	0	20%	Open	Closed	Closed	Hi
	↓					
HI-AUTO	Minimum (0" Hg.)	20%	Open	Closed	Closed	Hi
Slowly rotate	↓	20%	Open	Closed	Closed	Hi to M3
vacuum control	3.5	100%	Open	Closed	Closed	M3
knob from minimum to maximum	↓	100%	Open	Closed	Closed	M3 to M2
	7.5 to 9.0	100%	Closed	Open	Bleed	M2
	↓					
	12.0	100%	Closed	Open	Bleed	M2 to M3
	↓	100%	Closed	Open	Bleed	M3
Slowly rotate	12.0	100%	Closed	Open	Bleed	M3
vacuum control	↓					
knob from	6.5 to 7.5	100%	Open	Closed	Closed	M2
maximum to	↓					
minimum	2.5	20%	Open	Closed	Closed	M3
	↓					
	0	20%	Open	Closed	Closed	Hi
DEFROST	Minimum (0" Hg.)	20%	Closed	Bleed	Open	Hi
Slowly rotate	↓	20%	Closed	Bleed	Open	Hi to M3
vacuum control	3.5	100%	Closed	Bleed	Open	M3
knob from minimum to maximum	↓	100%	Closed	Bleed	Open	M3 to M2

PUSH BUTTON CONTROL CHART
(Continued)

Push Button Position	Control Vacuum	Fresh Air Door Position	AC Door Position	Heat Door Position	Defrost Door Position	Blower Motor Speed
	7.5 to 9.0	100%	Closed	Bleed	Open	M2
	↓					
	12.0	100%	Closed	Bleed	Open	M2 to M3
	↓	100%	Closed	Bleed	Open	M3
	12.0	100%	Closed	Bleed	Open	M3
	↓					
Slowly rotate vacuum control knob from maximum to minimum	2.5	20%	Closed	Bleed	Open	M2
	↓					
	0	20%	Closed	Bleed	Open	Hi
HI-DEFROST (Temp. control dial has no effect)	12.0" or Above	100%	Closed	Bleed	Open	M3

Blower Motor Speeds
Hi—
M3—One speed down from Hi
M2—One speed down from M3
M1—One speed down from M2
Lo—One speed down from M1

checking, mainly to see if it is opening and closing fully.

This check can be accomplished as follows:

(1) With the engine fully warm (at least 180° F. water) and at 1000 rpm, hood closed, system in Auto and Control Dial in minimum vacuum position, remove vacuum hose, black with red tracer, from thermostat and leave it vented. This will vent any vacuum to the water valve and it should be fully closed.

(2) Place a thermometer in center A/C outlet grille. Air temperature should drop to minimum (should be in the low 40°).

(3) With an external vacuum source, apply 3.5 inches Hg. to the water valve at the black with red tracer hose that was pulled off the thermostat. There should be no increase in discharge air temperature.

(4) Increase vacuum to water valve to 4.5 inches Hg. and observe a slight increase in discharge air. This increase should be about 10°F.

(5) Finally apply full vacuum (at least 12 inches Hg.) to water valve and observe temperature. It should rise rapidly to maximum, approximately 140°F.

If the valve did not pass any of the above tests, it is defective and should be replaced.

THERMOSTATIC VACUUM DELAY VALVE

The valve is an integral part of the water valve, and it is controlled by a wax pellet that is sensitive to water temperature. The valve prevents the start of the blower (by not allowing the vacuum circuit to the blower master switch to be completed) on Auto and Hi-Auto when heat is required until the engine water temperature increases.

A functional check of the valve can be made only when the system is in the Auto position requiring heating, and the engine is cold.

Connect a vacuum gauge to the outlet port of the delay valve. The valve will remain at zero inches vacuum until the engine coolant increases to 125° ± 5° F. at this point the gauge reading will increase to full slave circuit vacuum. The temperature indicator on the vehicle's instrument panel can be used to estimate coolant temperature.

When it has been definitely determined that vacuum delay valve is faulty, the entire water valve assembly must be replaced.

VACUUM TRANSFER SWITCH

This three port vacuum transfer switch, a spring, and a regular vacuum actuator, combine to give the

fresh/recirculating door 3 positions (Off or 0% fresh air, 20% fresh air, and 100% fresh air).

(1) Push the system Off button and start engine. Observe the following:

(a) Fresh/Recirculating Air Door is on 0% fresh air.

(b) Switch Plunger is retracted and touching lever.

(2) Disconnect solid black vacuum line at thermostat and leave it vented. Push the Auto button. Observe the following:

(a) Fresh/Recirculating Air Door is on 20% fresh air.

(b) Switch plunger has moved out but is still contacting lever.

Reconnect vacuum hose to thermostat after this check.

(3) Remain in Auto and set dial control to warmest position 85. Observe the following:

(a) Fresh/Recirculating Air Door is on 100% fresh air.

(b) Switch plunger has moved all the way out and is no longer in contact with lever.

If all .of the above occurred as stated, the switch is operating properly. If they did not, proceed as follows:

(1) Push the system Off button, leave engine running.

(2) Remove 3 port vacuum plug from transfer switch and connect a vacuum source to the middle port of the switch. Do the following:

(a) Depress plunger all the way in and check for absence of vacuum at the right port (one closest to lever) and absence of vacuum at the left port.

(b) Release plunger and check for absence of vacuum at the left port and presence of vacuum at the right port.

If the above did not occur as stated, the transfer switch is faulty and should be replaced.

BLOWER MASTER ON-OFF SWITCH

The master switch is vacuum operated and turns on the blower. A magnet mounted inside the switch holds the electrical contacts open. When sufficient vacuum is applied an internal diaphragm with attached electrical contact is pulled away from the magnet and the electrical circuit is completed.

This switch can be checked by applying 8 ± 1 inch Hg. vacuum to it with an external vacuum source and checking for electrical continuity, and by removing the vacuum source and checking to see that it opens at less than 5 inches Hg. vacuum. The resistance of this switch can be checked by measuring the voltage at the motor when the system is in Hi-Blower air conditioning. If the motor voltage is low, and it can be corrected by replacing the master switch with a jumper, the switch should be replaced.

COMPRESSOR VACUUM SWITCH

This switch is vacuum operated and turns on the compressor (if the ambient switch is closed). It is identical to the blower master switch except in that it closes at 2 ± 1 inch Hg. vacuum and completes the electrical circuit to the compressor clutch. The switch is actuated immediately in any push-button position except Off.

The performance of the switch can be checked by applying 2 ± 1 inch Hg. vacuum with an external vacuum source and checking for electrical continuity then removing the vacuum source and checking to see that it opens. The resistance of the switch can be checked by measuring the voltage at the clutch any time the compressor should be running. If the clutch voltage is low, and can be corrected by replacing the switch with a jumper, the switch should be replaced.

COMPRESSOR AMBIENT SWITCH

The compressor ambient switch completes the electrical circuit to the clutch, ETR switch, and ETR solenoid if the ambient temperature is above 32°F. The operation of the compressor down to 32°F. provides a smooth transition for incoming air, and adds to comfort by also dehumidifying in cool, damp weather.

Due to its location, the switch will become heated periodically during the winter season by brief shutdowns of the Auto-Temp system or the engine. On restart, the compressor will operate for brief period and, thereby, allows the shaft seal to be lubricated automatically.

The ambient switch can be checked by removing it and checking for continuity at a temperature slightly above 32°F., and for being open at temperatures slightly below 32°F.

ANTI-FROST CONTROLS

This control consists of 2 parts: ETR Valve Solenoid and ETR Switch.

The anti-frost control is a device which allows the evaporator to maintain a minimum air temperature, without allowing the moisture on the fins to freeze, down to ambient temperatures of approximately 32°F. This ETR (evaporator temperature regulator) control was chosen for the Auto-Temp system because the EPR used on Standard A/C cars would not prevent coil freeze-up at the lower ambient temperatures at which the compressor is required to operate. The ETR consists of the electrical solenoid which is actuated by the temperature switch which senses coil fin temperature.

The ETR solenoid can be checked simply by energizing it directly off the battery and listening for its closing.

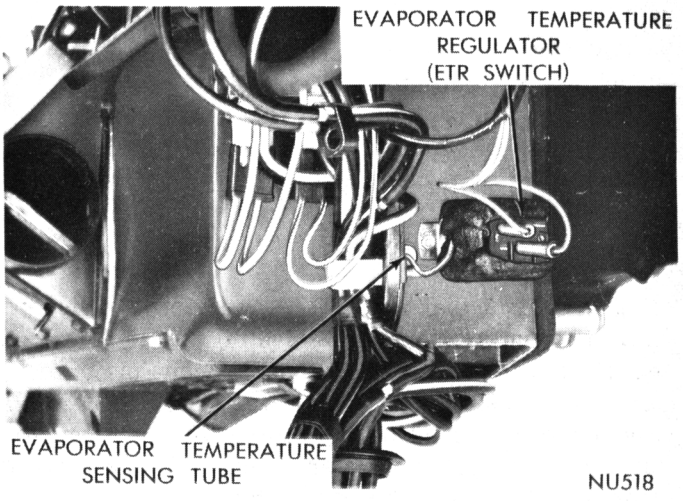

Fig. 5—ETR Switch Location

The ETR switch (Fig. 5), can be tested for operation as follows:

(1) Set thumbwheel potentiometer below 65.

(2) Connect a test light in series with the ETR switch feed wire at the compressor.

(3) Connect a three gauge manifold, Tool C-3740 (Fig. 6), with suction and discharge valves closed.

(4) Start engine and set at 1000 RPM. Close all car doors and windows and press Auto button.

(5) Allow engine to run about 5 minutes and compare gauge readings with switching action of ETR switch.

Test Light	Evaporator Suction Gauge	Discharge Pressure Gauge	Compressor Inlet Gauge
OFF	22	180	30
ON	30	150	0 or below

Head pressure may vary, but a 25 to 30 pound pressure differential will show during switching action of the ETR switch.

ETR SOLENOID VALVE

The ETR valve is a precision part, with extremely small operating clearances. The presence of foreign material between the two sleeves can cause the valve to stick. It is, therefore, imperative that every effort be made to protect the valve from contaminants.

Replacement

(1) Discharge system as outlined in A/C section of this manual.

(2) Disconect 12 volt D.C. lead from the ETR terminal gasket at the suction fitting.

(3) Remove the 2 bolts holding the suction fitting to the compressor, and remove the fitting.

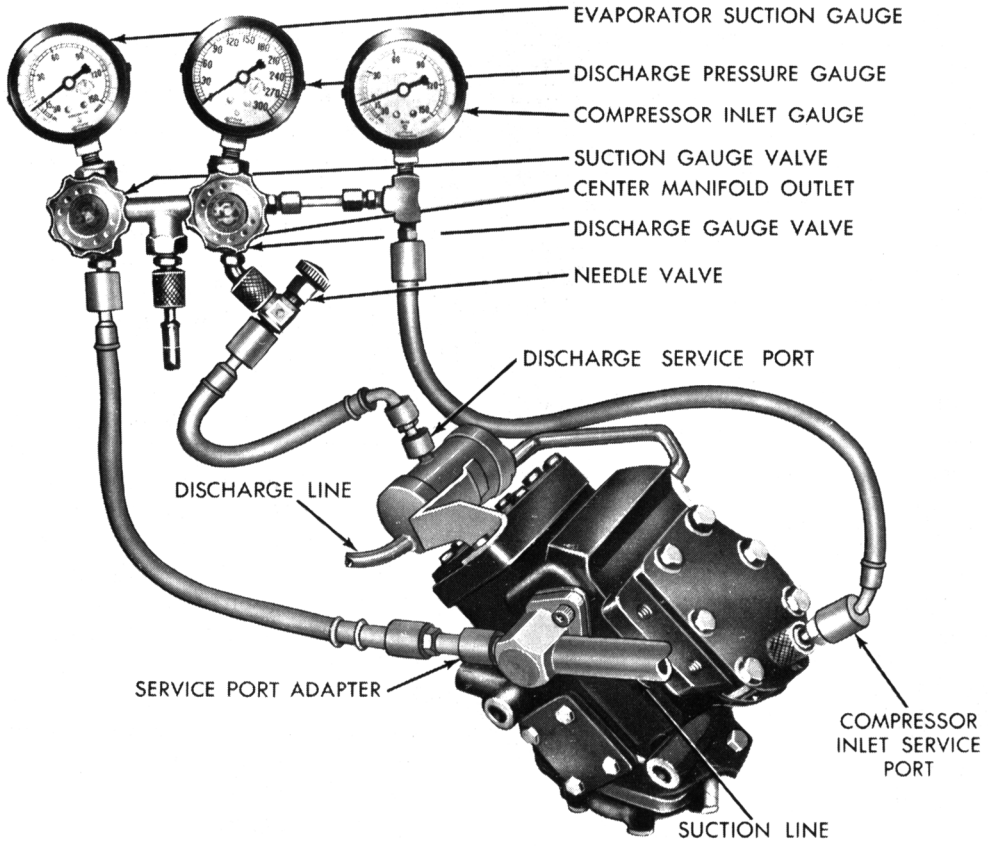

Fig. 6—Gauge Set Manifold Connections

(4) Remove the terminal gasket from the compressor, and discard.

(5) Scrape off any gasket particles remaining on the crankcase and suction fitting, working from the center outwards, thereby reducing the possibility of contaminating the compressor. If the system check had indicated a lack of electrical continuity, place a short length of 1″ diameter tubing against the rear face of the ETR valve collar, and tap lightly, to ensure good contact between the compressor and the chamfered surface of the valve collar. Check the valve for operation by applying 12 volts D.C. to the valve terminal post.

(6) Remove the valve from the compressor, using Tool C-3301A (Fig. 7). Recheck the valve for operation, by connecting 12 volts D.C. to the valve terminal post. The valve should close when grounded at the bottom of the outer sleeve.

CAUTION: Do not energize the valve continuously for more than 30 seconds. If the valve is still inoperative, replace it.

(7) Inspect the suction annulus for foreign material, and ensure that the plug in the ETR/oil bypass is pushed below the machined surface of the ETR cavity.

(8) Check for valve operation by clamping a 12 volt D.C. lead to the terminal post and gently tapping the bottom of the valve against a clean grounding surface.

(9) Using Tool C-3301A, insert the ETR valve as far as possible into the suction annulus. Gently tap the valve in as far is it will go, using the tool previously described.

(10) Coat both the suction fitting and compressor crankcase mating surfaces with a light coating of clean refrigerant oil.

(11) Install new terminal gasket so that the copper terminal spring slips over the terminal post of the ETR valve.

(12) Torque the suction fitting bolts to 11 ± 3 foot-pounds in small equal increments, to ensure proper seating on the gasket. Check for continuity and operation by applying 12 volts D.C. to terminal.

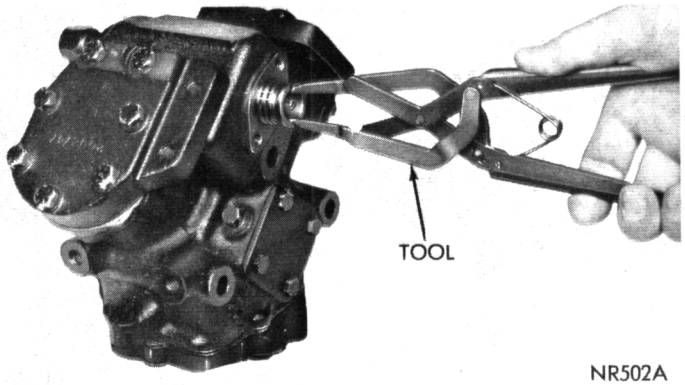

Fig. 7—Removing ETR Valve

(13) Charge the system with refrigerant-12 and check for refrigerant leaks.

(14) Reconnect 12 V D.C. lead from anti-freeze switch to ETR valve at the terminal gasket. Check system for proper operation.

TEMPERATURE CONTROL DIAL

The control dial allows the operator to select an interior comfort level by selecting a number from 65 to 85 F. Movement of the dial controls a resistance potentiometer, which is part of the dial assembly. There is a calibration between the dial temperature and the potentiometer resistance. The potentiometer will put out the proper biasing resistance signal to the control system so that it will control at the selected interior temperature.

There are 3 basic problems which may occur with the control dial potentiometer assembly. These are listed along with the system malfunction symptom.

(1) **Potentiometer could be open**—System would operate on maximum A/C and high blower only.

(2) **Potentiometer could have a short**—System would operate on maximum heating and high blower only.

(3) **Dial and Potentiometer could be out of calibration.** Dial must be set too high or too low to attain comfort.

Checking the above can be accomplished as follows:

(1) To check the dial potentiometer for an open or short, disconnect potentiometer leads (violet color) and connect them to an ohmmeter (Simpson model 260 series 4, volt-ohm-milliammeter, or any equivalent ohmmeter can be used). Observe the following:

(a) If meter shows infinite resistance, the potentiometer is open and should be replaced.

(b) If meters shows zero resistance, the potentiometer has a short.

(c) If potentiometer is good, there should be a smooth change in resistance from approximately 50 to 550 ohms in dial rotation from 85 to 65. If not, the potentiometer should be replaced.

(2) To check the dial control calibration, set the dial to 75 at center of Bezel. The meter should read 300 ohms. If it is out of calibration, it can be adjusted as follows:

(a) Rotate dial so that meter reads 300 ohms.

(b) Hold potentiometer shaft as shown in Fig. 9 and slip dial so that number 75 is on center of Bezel.

After completing work on the control dial assembly, be sure to reconnect all wiring.

IN-CAR SENSOR

The in-car sensor is located in a removable grille

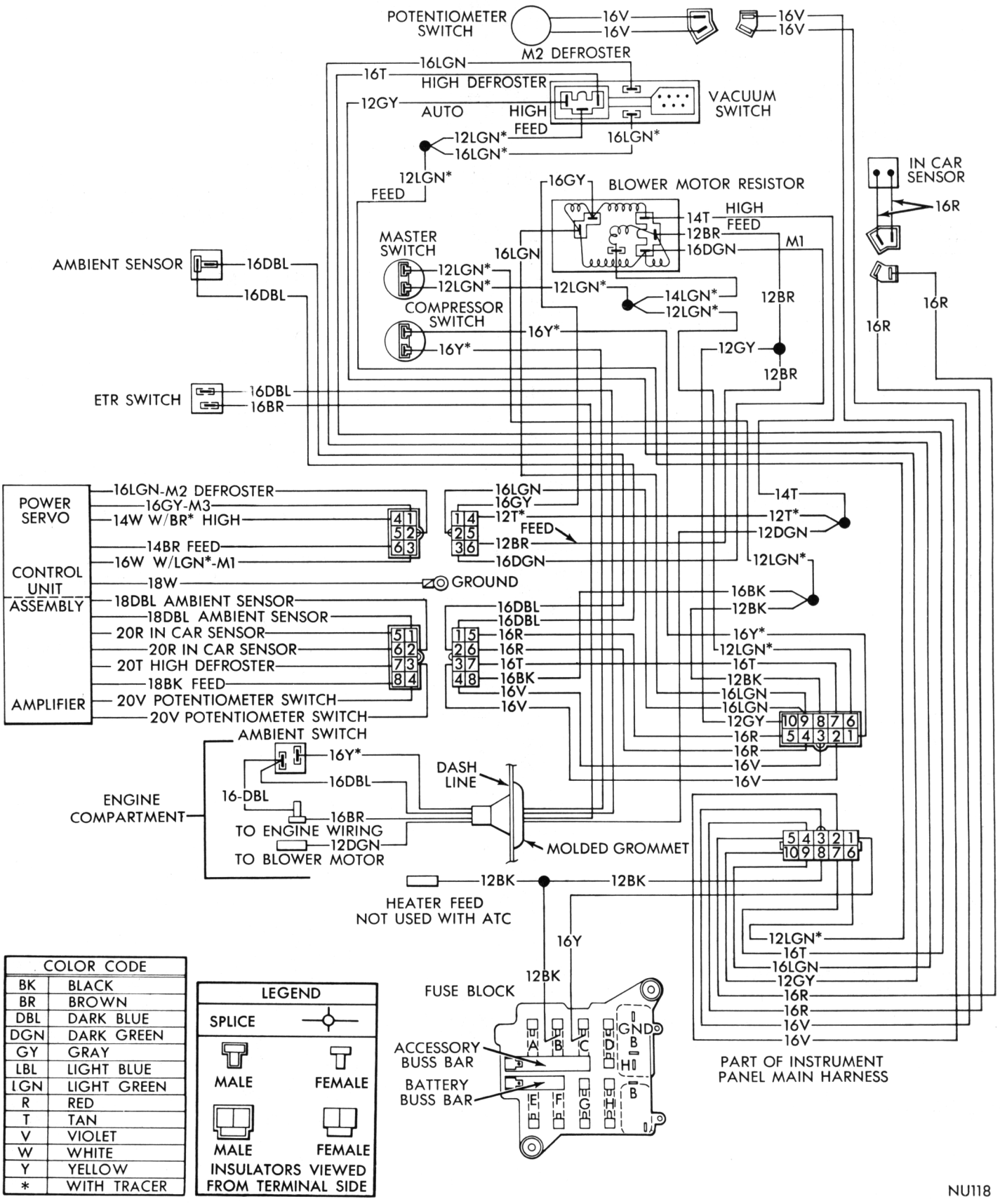

Fig. 8—Auto-Temp Wiring Diagram

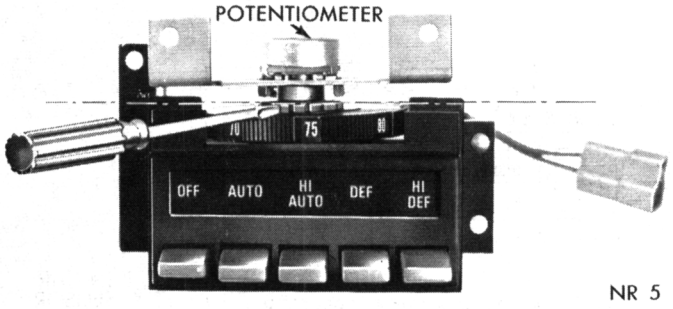

Fig. 9—Thumbwheel Calibration

so that check or replacement can be accomplished. It senses car interior temperature and automatically signals the control unit to compensate for any variation from the selected dial temperature.

There are two basic problems which may occur with the sensor. These problems and the system malfunction symptoms are:

(1) **Sensor could be open**—System would operate on maximum heating and high blower only.

(2) **Sensor could have a short**—System would operate on maximum A/C and high blower only.

The above can be checked in the same manner as the control dial potentiometer.

If the sensor is defective, check connections, repair or replace as necessary. The calibration cannot be checked without extensive measuring techniques. If the sensor is suspected to be out of calibration, a new sensor may be tried, but it is considered very doubtful that this will occur.

AMBIENT SENSOR

This sensor senses the outside ambient temperature. It makes adjustments to the system that are required to maintain a constant interior comfort level due to ambient temperature changes.

There are two basic problems which may occur with this sensor, also. The problems and system malfunction symptoms are as follows:

(1) **Sensor could be open**—System operates on heat mode at all times.

(2) **Sensor could have a short**—System operates on maximum A/C and high blower only.

These deficiencies are checked in the same manner as for the in-car sensor. If sensor is faulty as described, repair or replace as necessary. A calibration check of this sensor is also difficult, therefore a new sensor may be tried in the system if it is suspected.

ASPIRATOR

The aspirator is a tube shaped device connected to the passenger side housing in such a manner that air flowing through the housing creates a slight vacuum in the aspirator. The aspirator is connected to the in-car sensor by a flexible tube. The vacuum in the aspirator tends to pull in-car air over the sensor.

Aspirator and Tube Test

With air flowing through the passenger side housing the aspirator should pull air into the in-car sensor grille. This can be checked by holding a smoking object (cigarette) next to the grille with the system on M3 blower in heat mode. If smoke is not pulled into the grille the aspirator is not working properly. The aspirator and tube must be inspected for incomplete connection or kinks.

VACUUM RESERVOIR TANKS

There are two reservoir tanks: Slave System Vacuum Tank and Servo System Vacuum Tank.

Both reservoir tanks are used for the purpose of maintaining sufficient vacuum in the system in cases where source vacuum is lost momentarily. Each tank has a check valve at the inlet port which closes when the vacuum supply drops off.

Operation of both tanks is checked in the same manner:

(1) Connect a 0-29 inch Hg. vacuum gauge to outlet port of tank.

(2) Start engine and allow to run at idle speed.

(3) Vacuum at gauge should build up above 20 inch Hg. in less than one minute.

(4) Shut engine off, and observe gauge.

(a) If vacuum does not drop off, the check valve and tank are operating satisfactorily.

(b) If vacuum drops off, there is a leak and tank assembly should be replaced.

CHECK VALVES (Fig. 10)

Check valves are used in the Auto-Temp system to prevent the venting of certain vacuum circuits, when the vacuum supply is lost or removed.

The check valves, which are an integral part of the

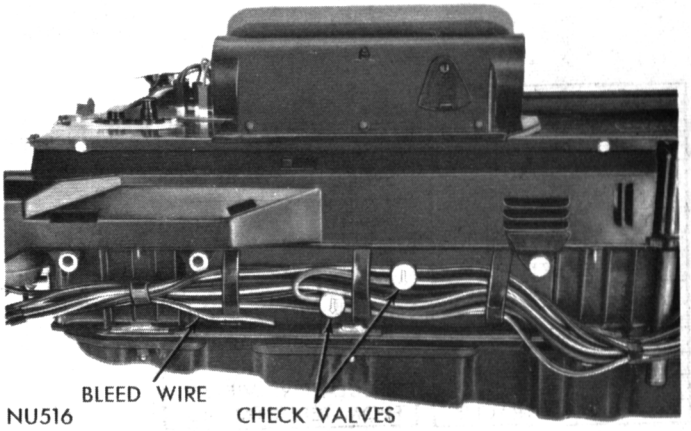

Fig. 10—Check Valves (Bottom View of Housing)

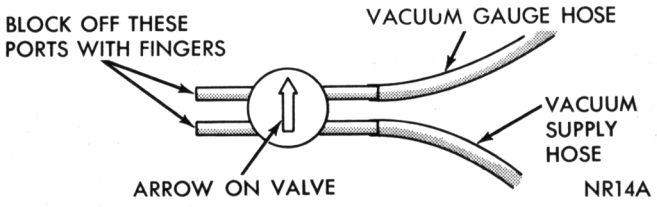

Fig. 11—Vacuum Check Valve Test

reservoir tanks, are discussed in the vacuum reservoir tank check-out procedure. There are two other check valves in the vacuum system. These two valves are a part of the vacuum harness assembly, and are located in the area where the harness routes under the passenger side housing. The valves are spaced apart on the harness, and for identification, they will be referred to in sequence as numbers 1 and 2; where number 1 is the closest to the control unit assembly.

Each check valve also serves as a "tee" connector, thereby eliminating extra connections. On the body of each valve is an arrow which points to the port or ports being checked.

Test Procedure For Check Valves

The following is presented as an aid for diagnosing check valve failures:

(1) The most probable types of failures with check valves are leakage and incorrect installation. The malfunctions created by faulty check valves are:

Check Valve Number 1 Leaking: System stays on 20% fresh/air and will not go to 100% fresh/air. Also, system shuts off when vacuum supply is lost.

Check Valve Number 1 Installed Backwards: System malfunctions the same as with a leaking valve. Also, with a cold engine the blower will not come on when the "Defrost" or "Hi-Defrost" button is pushed.

Check Valve Number 2 Leaking: Blower starts immediately and blows cold air during cold weather.

Check Valve Number 2 Installed Backwards: Blower starts immediately and blows cold air during cold weather. With the engine cold the blower will not shut off when the "Off" button is pushed.

(2) When check valve failure is suspected, the following should be done:

(a) Inspect harness to see that valves are installed correctly as in (Fig. 10).

(b) Remove any valves which are suspected to be faulty, and check as follows:

Connect a vacuum gauge and supply vacuum to valve as shown (Fig. 11).

Apply full vacuum attainable from car or from an external source. Note vacuum at gauge and remove vacuum supply hose. The reading should have remained approximately the same. If vacuum is dropping off at the gauge, the check valve is faulty. Change any valves which are found faulty and check out system to see if malfunction has been corrected. It should be noted that the most severe test on a check valve is below freezing weather. It is possible that a defective valve will not work in such weather, but work at room ambient temperatures.

CAUTION: Do not use a lubricant of any type to attempt to increase the efficiency of faulty check valves as serious damage will result to the entire vacuum system.

System Vacuum Leak Test

(1) "Tee-in" a 0 to 30 inch vacuum gauge at the master switch (green color coded) vacuum connection.

(2) With the "Auto" button depressed, place system on Heat mode by rotating tester vacuum control dial to maximum vacuum.

(3) Allow vacuum at master switch gauge to build up to at least 18 inches and stabilize.

(4) Turn engine off and observe master switch gauge vacuum decay for one minute.

If the vacuum gauge did not build up to at least 18 inches vacuum with the engine running, or if the vacuum decay rate with the engine off exceeded 5 inches per minute, the system shall fail the performance test.

Servo System Vacuum Leak Test

(1) With engine running, push the "Hi-Def" button.

(2) Observe that vacuum on tester gauge builds up above 15 inches and stabilizes.

(3) With engine running, pull off the vacuum supply hose to the servo system vacuum tank, and observe tester gauge vacuum decay for one minute.

If the vacuum decay rate exceeds 1 inch per minute, the system shall fail the performance test.

VACUUM CIRCUITS FOR EACH PUSH BUTTON POSITION (Figs. 12 thru 17)

When testing or adjusting the doors in the distribution system, it is necessary to know the correct position of each door for each push-button position. In the illustrations which follow; air flow is indicated, also which vacuum actuator hoses are activated for each push-button position.

With the use of the Service Diagnosis, Push Button Control Chart and Vacuum Circuit Diagrams, a quick and accurate solution to vacuum problems should be obtained.

CAUTION: Do not use lubricant on switch prods or in vacuum hoses as lubricants will ruin the vacuum valve in the switch and cause check valves to fail. If it is impossible to properly position the connector plug all the way on the switch prods, put a drop or two of clean water in the holes of the connector plug. This will allow the plug to slide completely on switch prods.

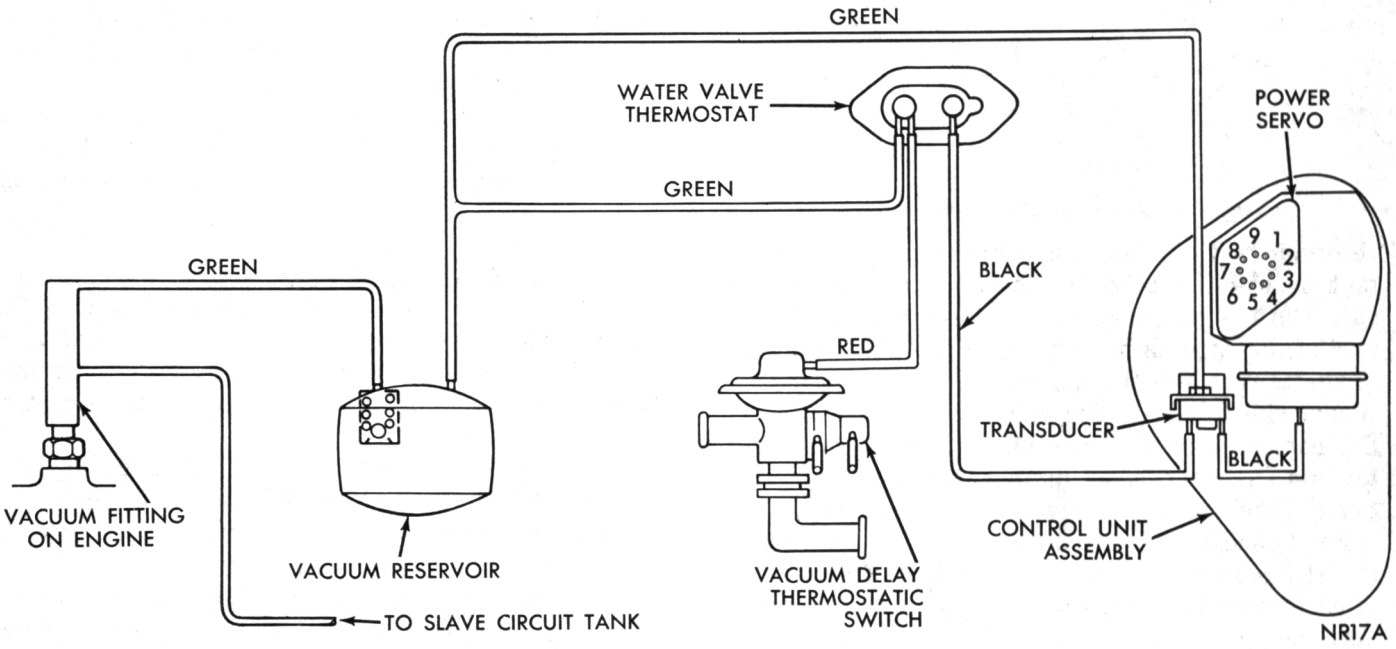

Fig. 12—Auto-Temp Control Vacuum Circuit

PERFORMANCE TEST

Humidity (the amount of moisture in the air) has an important bearing on the temperature of the air delivered to the vehicle's interior. This is true of all air-conditioned systems whether in the home, office or vehicle. It is important to understand the effect humidity has on the performance of the system. When humidity is high, the evaporator has to perform a double duty. It must lower the air temperature and the temperature of the moisture carried in the air. Condensing the moisture in the air transfers a great deal of heat energy into the evaporator fins and tubing. This reduces the amount of heat the evaporator can absorb from the air. In other words, high humidity greatly reduces the evaporator's ability to lower the temperature of the air delivered to the vehicle interior.

Evaporator capacity used to reduce the amount of moisture in the air is not wasted. Wringing some of the moisture out of the air entering the vehicle adds materially to the comfort of the passengers. However, an owner may expect too much from his air-conditioning system on humid days. A performance test is the best way to determine whether or not the system is performing up to standard. This test also provides valuable clues to the possible cause of trouble. Install gauge set as shown in Fig. 6.

Connect Auto-Temp Tester, as shown in Figure 3. Place system in minimum vacuum position. System should be in the maximum cooling position (air conditioning, 20% F/A, and Hi blower).

Put fresh/recirculating door in the 100% fresh/air position. This can be done by removing the glove box and the right spot cooler duct. Remove and plug the white vacuum hose on the pot side of the fresh/air door actuator. Connect an external vacuum source to the pot side of this actuator. Replace the right spot cooler duct.

Arrange gauge set manifold hoses and tachometer leads to allow hood to be lowered, then close hood.

Place motor-driven psychrometer Tool C-3704 at cowl inlet opening. Distilled water should be used with this meter to prevent drying out and hardening the wet sock.

Place thermometer Tool C-3623 fully into center outlet grille opening. The left outlet should be fully extended and directed towards rear of vehicle.

Start the engine, open the windows, push the "Hi-Auto" button, open all grille outlets and set engine idle at 1300 R.P.M. **When testing the front unit of a dual system, leave roof unit blower turned off.**

Operate the air-conditioning system until a stabilized condition on the gauges and thermometers has been established. One of the most important steps in making the over-all performance test is that the engine must be operated at the RPM as indicated for approximately five minutes to allow all the underhood components of the system to reach their operating temperature.

Partially close the needle valve, located below the discharge pressure gauge, to minimize oscillation of the pointer. Do not close the needle valve completely since this would prevent the discharge pressure gauge from registering pressure.

This test should be performed with the discharge

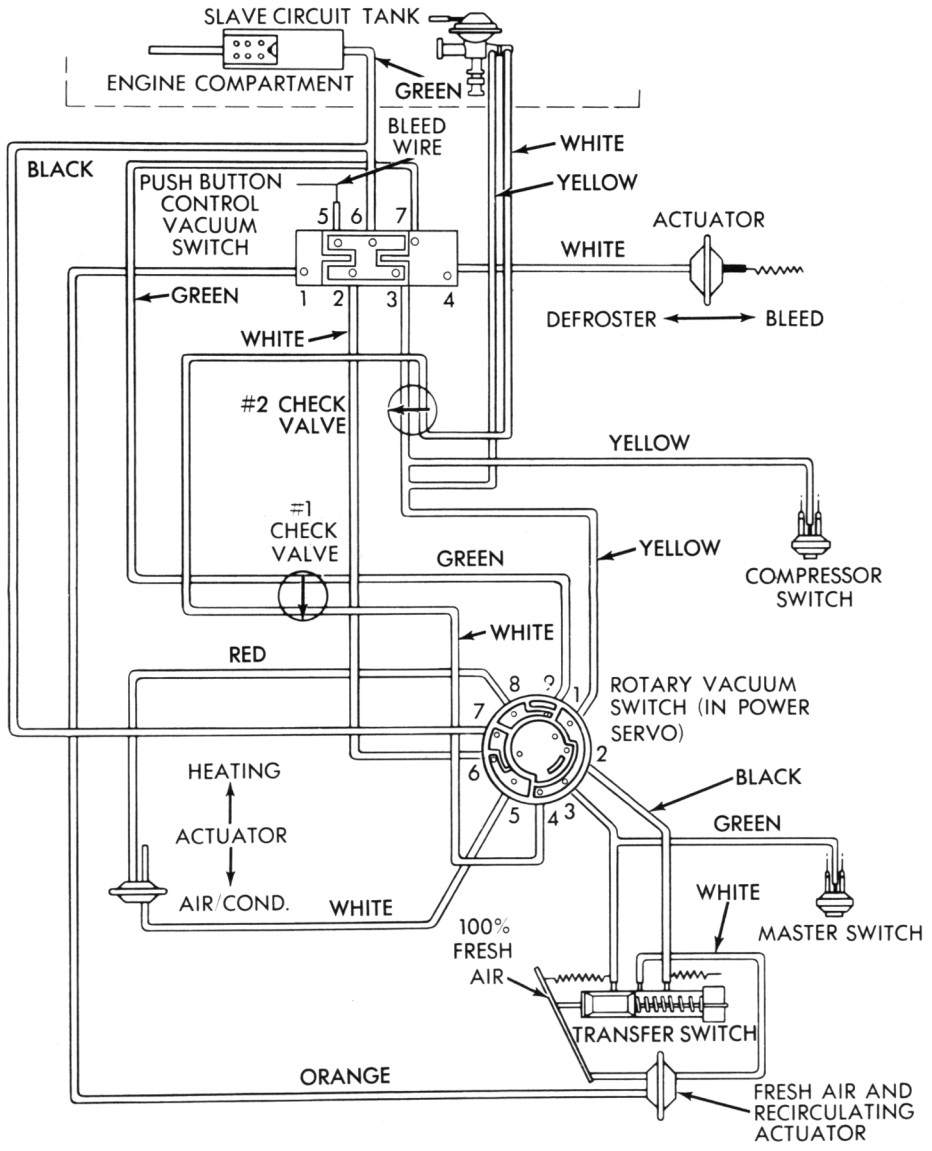

VACUUM HOSE COLOR CODE

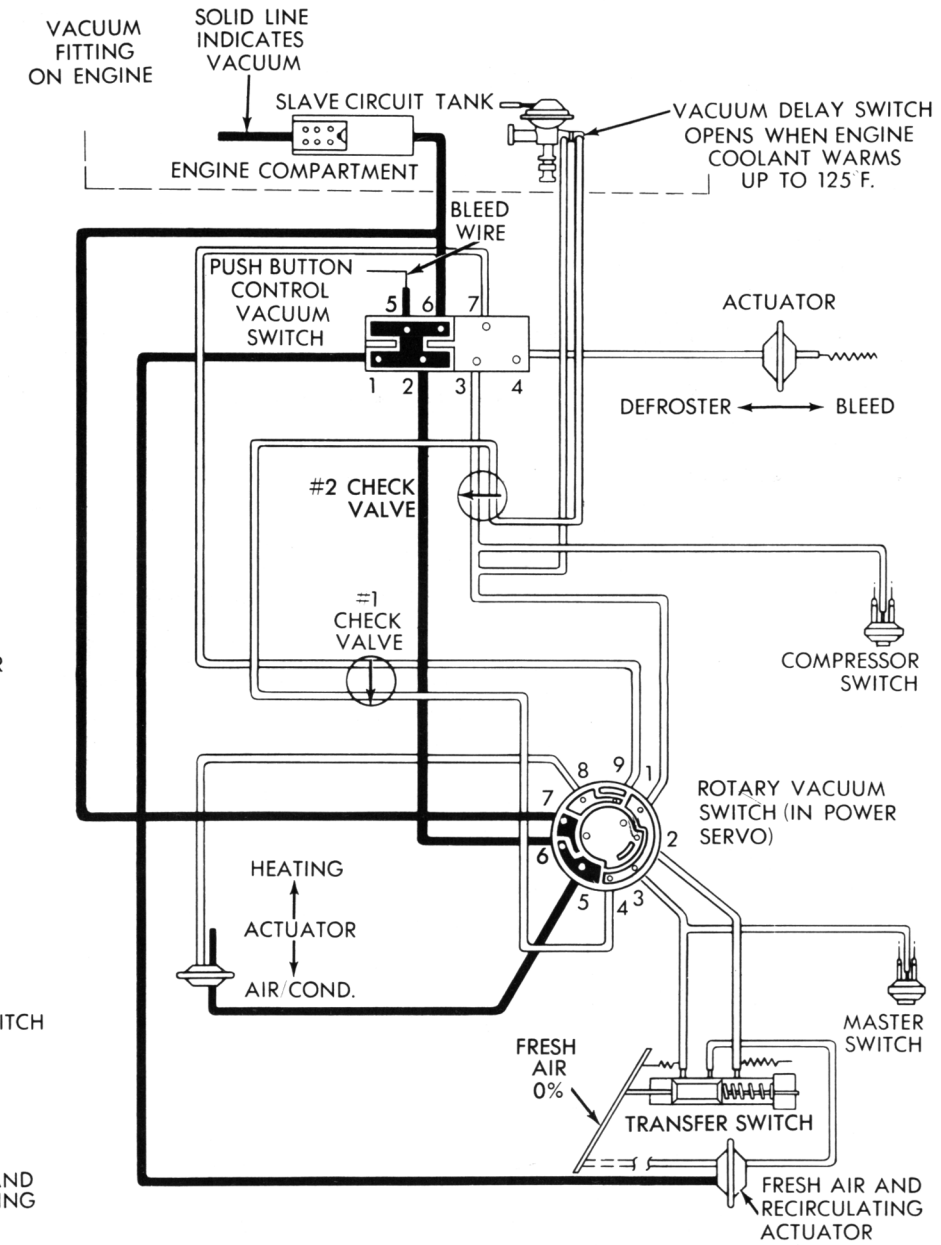

OFF POSITION AIR/COND—0% FRESH AIR

NU112

Fig. 13—Slave System Vacuum Circuit

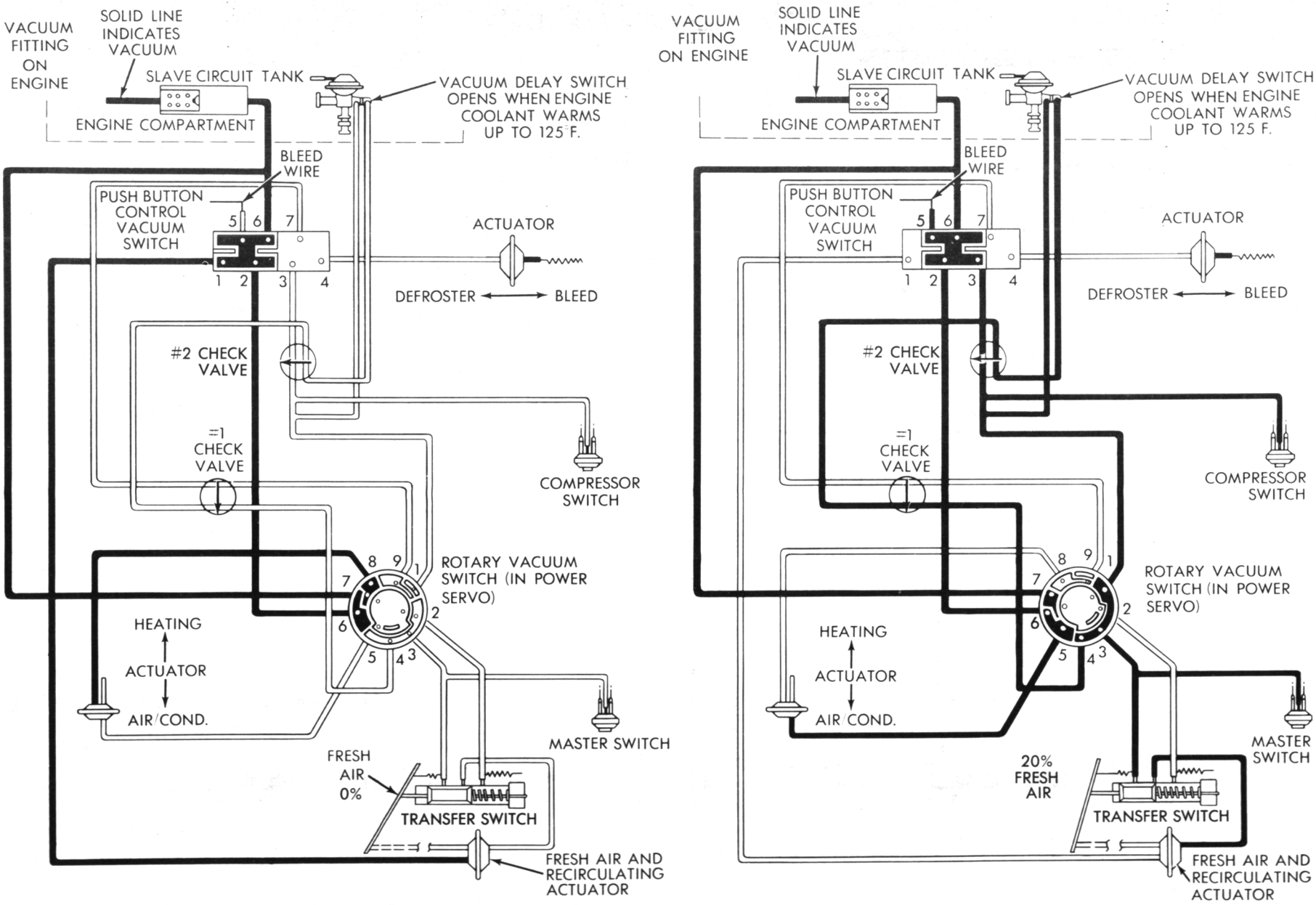

OFF POSITION HEAT—0% FRESH AIR

AUTO OR HI-AUTO AIR/COND—20% FRESH AIR

NU113

Fig. 14—Slave System Vacuum Circuit

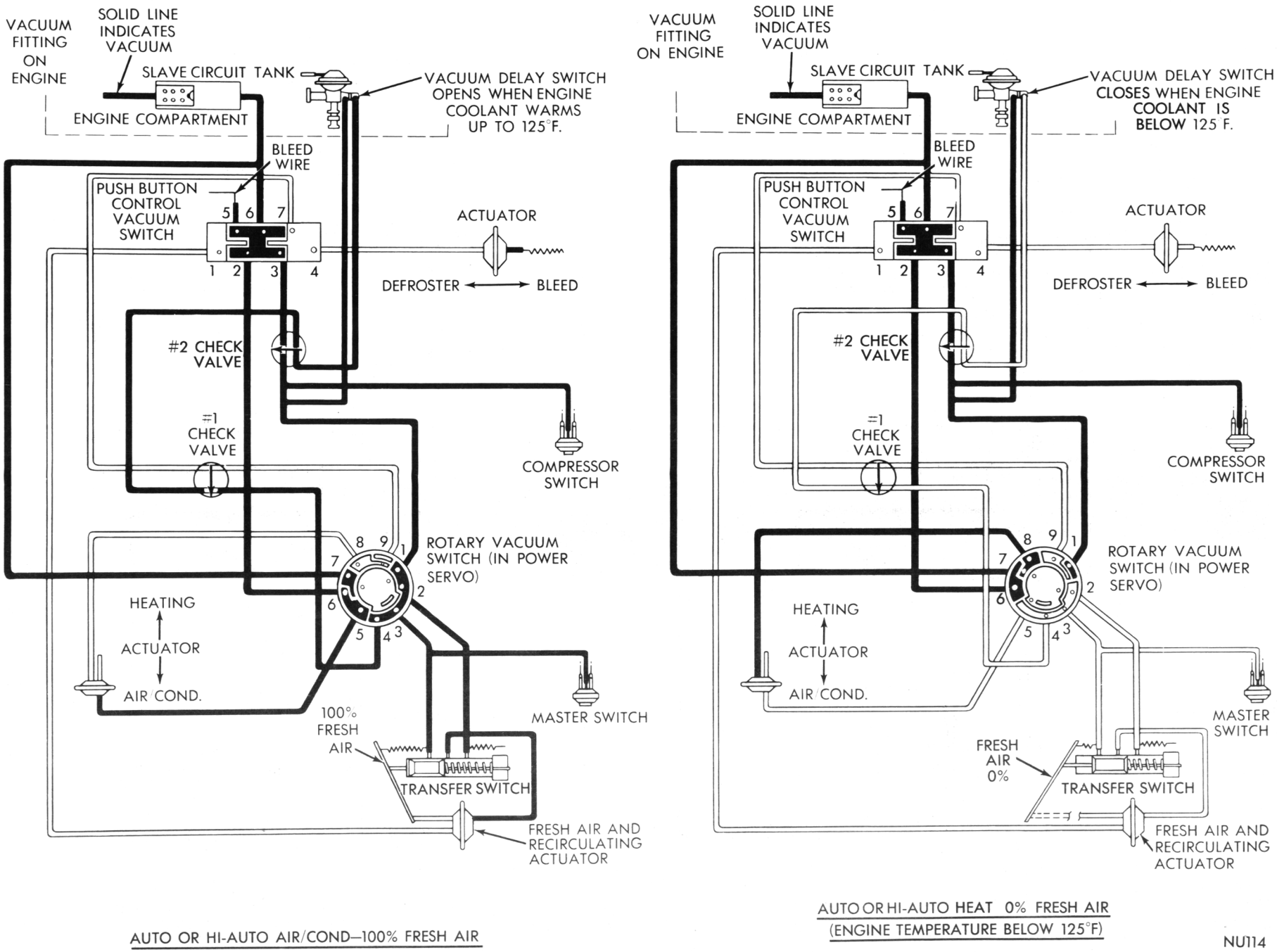

AUTO OR HI-AUTO AIR/COND—100% FRESH AIR

AUTO OR HI-AUTO HEAT 0% FRESH AIR (ENGINE TEMPERATURE BELOW 125°F)

NU114

Fig. 15—Slave System Vacuum Circuit

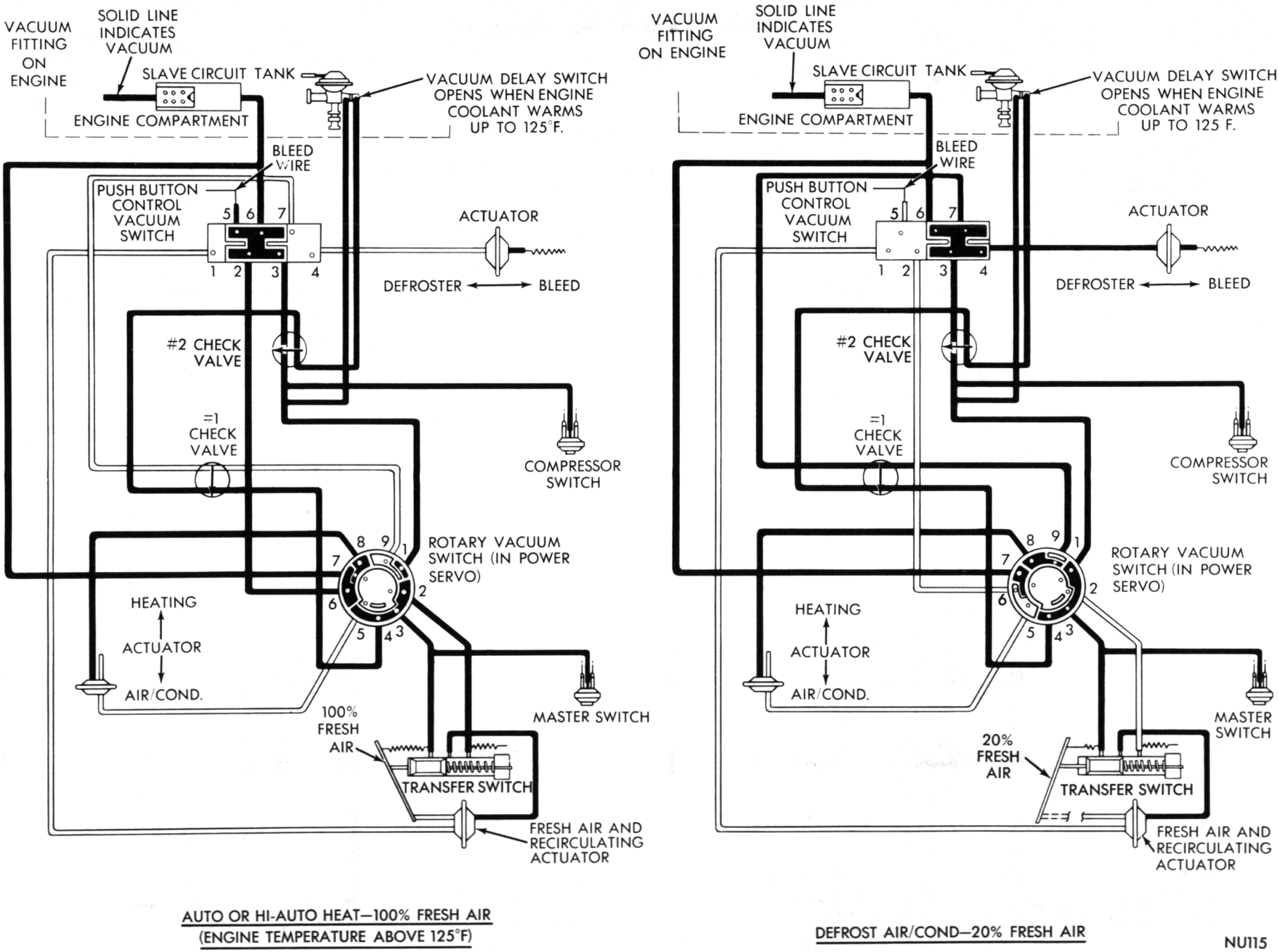

AUTO OR HI-AUTO HEAT—100% FRESH AIR
(ENGINE TEMPERATURE ABOVE 125°F)

DEFROST AIR/COND—20% FRESH AIR

NU115

Fig. 16—Slave System Vacuum Circuit

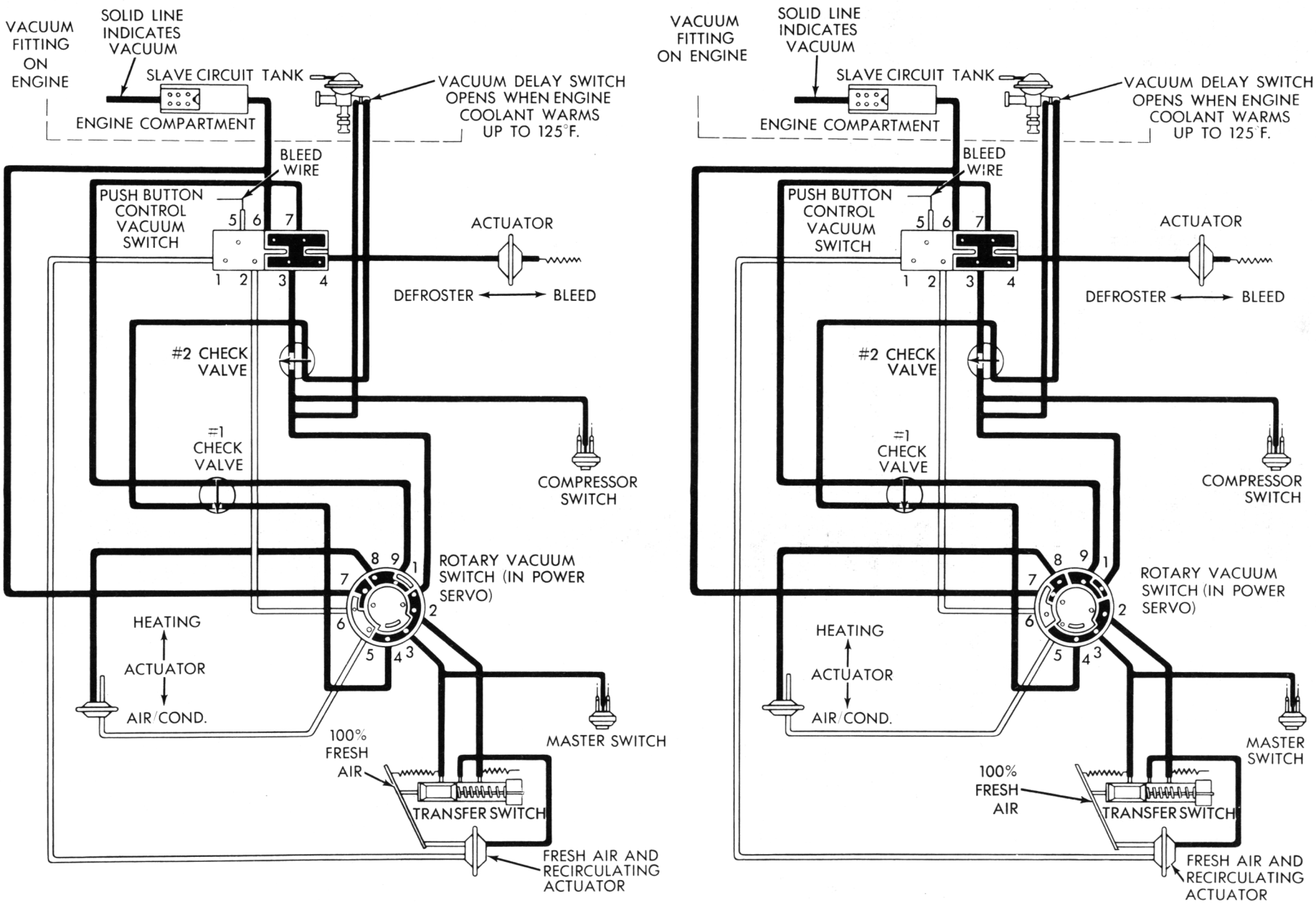

DEFROST AIR/COND—100% FRESH AIR

DEFROST OR HI-DEF HEAT—100% FRESH AIR

NU116

Fig. 17—Slave System Vacuum Circuit

SINGLE UNIT

INLET AIR WET BULB TEMPERATURE

55	56	57	58	59	60	61	62	63	64	65	66	67	68	69	70	71	72	73	74	75	76	77	78	79	80	81	82	83	84	85	86	87	88	89	90
41	42	43	44	45	46	47	48	49	50	50	50	51	51	52	52	53	53	53	54	54	55	56	57	58	59	59	60	62	64	66	67	68	69	70	71

DISCHARGE AIR DRY BULB TEMPERATURE

INLET AIR DRY BULB TEMPERATURE MUST BE BETWEEN 75° AND 110°F NK1342A

Fig. 18—Performance Temperature Chart—Single Unit Fury and VIP

pressure from 190 to 210 psi. The 190 to 210 pound pressure is for **test purposes only.** To increase pressure restrict the air flow across the condenser using cardboard or paper. To decrease pressure, increase air flow across condenser with external floor fans.

Observe and record both the "Inlet Dry Bulb Temperature" and "Inlet Wet Bulb Temperature" as registered on the psychometer.

Observe and record "Discharge Air Temperature" registered by thermometer at right hand grille outlet.

From the "Performance Temperature Chart," (Fig. 18), determine the maximum allowable discharge air temperature for the prevailing "Dry" and "Wet" bulb temperatures recorded. If the vehicle's discharge air temperature is at or below the temperature given on the Performance Chart, the air-conditioning is delivering its cooling capacity.